REVISIONS			
REV	DESCRIPTION	DATE	APPROVED

NOTES:

1. THE PRODUCT SHOWN HEREIN IS DESIGNED AND MANUFACTURED TO COMPLY WITH REQUIREMENTS OF 2006 IBC AND IRC WITH STATE OF TEXAS MODIFICATIONS.
2. WOOD FRAMING AND MASONRY OPENING TO BE DESIGNED AND ANCHORED TO PROPERLY TRANSFER ALL LOADS TO STRUCTURE. FRAMING AND MASONRY OPENING IS THE RESPONSIBILITY OF THE ARCHITECT OR ENGINEER OF RECORD.
3. 1X BUCK OVER MASONRY/CONCRETE IS OPTIONAL. WHERE 1X BUCK IS NOT USED DISSIMILAR MATERIALS MUST BE SEPARATED WITH APPROVED COATING OR MEMBRANE. SELECTION OF COATING OR MEMBRANE IS THE RESPONSIBILITY OF THE ARCHITECT OR ENGINEER OF RECORD.
4. ALLOWABLE STRESS INCREASE OF 1/3 WAS NOT USED IN THE DESIGN OF THE PRODUCT SHOWN HEREIN. WIND LOAD DURATION FACTOR Cd=1.6 WAS USED FOR WOOD ANCHOR CALCULATIONS.
5. FRAME MATERIAL: ALUMINUM 6063–T6.
6. UNITS MUST BE GLAZED PER ASTM E1300–04, SEE SHEET 3 FOR GLASS OPTIONS.
7. APPROVED IMPACT PROTECTIVE SYSTEM <u>IS NOT REQUIRED</u> FOR THIS PRODUCT IN WIND BORNE DEBRIS REGIONS.
8. SHIM AS REQUIRED AT EACH INSTALLATION ANCHOR WITH LOAD BEARING SHIM. SHIM WHERE SPACE OF 1/16" OR GREATER OCCURS. MAXIMUM ALLOWABLE SHIM STACK TO BE 1/4".
9. FOR ANCHORING INTO WOOD FRAMING OR 2X BUCK USE #14 WOOD SCREWS WITH SUFFICIENT LENGTH TO ACHIEVE A 1 7/16" MINIMUM EMBEDMENT INTO SUBSTRATE. LOCATE ANCHORS AS SHOWN IN ELEVATIONS AND INSTALLATION DETAILS.
10. FOR ANCHORING INTO MASONRY/CONCRETE USE 1/4" TAPCONS WITH SUFFICIENT LENGTH TO ACHIEVE A 1 1/4" MINIMUM EMBEDMENT INTO SUBSTRATE WITH 2 1/2'' MINIMUM EDGE DISTANCE. LOCATE ANCHORS AS SHOWN IN ELEVATIONS AND INSTALLATION DETAILS.
11. FOR ANCHORING INTO METAL STRUCTURE USE #14 SMS OR SELF DRILLING SCREWS WITH SUFFICIENT LENGTH TO ACHIEVE 3 THREADS MINIMUM BEYOND STRUCTURE INTERIOR WALL. LOCATE ANCHORS AS SHOWN IN ELEVATIONS AND INSTALLATION DETAILS.
12. ALL FASTENERS TO BE CORROSION RESISTANT.
13. INSTALLATION ANCHORS SHALL BE INSTALLED IN ACCORDANCE WITH ANCHOR MANUFACTURER'S INSTALLATION INSTRUCTIONS AND ANCHORS SHALL NOT BE USED IN SUBSTRATES WITH STRENGTHS LESS THAN THE MINIMUM STRENGTH SPECIFIED BELOW:
    A. WOOD – MINIMUM SPECIFIC GRAVITY OF G=0.42
    B. CONCRETE – MINIMUM COMPRESSIVE STRENGTH OF 3,192 PSI.
    C. MASONRY – STRENGTH CONFORMANCE TO ASTM C–90, GRADE N, TYPE 1 (OR GREATER).
    D. METAL STRUCTURE: STEEL 18GA, 33KSI OR ALUMINUM 6063–T5 1/8" THICK MINIMUM

SIGNED: 05/08/2013

TABLE OF CONTENTS

SHEET NO.	DESCRIPTION
1	NOTES
2	ELEVATION AND ANCHORING
3	B.O.M. AND GLAZING DETAILS
4	CROSS SECTIONS
5 – 6	INSTALLATION DETAILS
7	COMPONENTS

WinDoor INCORPORATED
7500 AMSTERDAM DRIVE
ORLANDO, FL 32832
Phone: 407.481.8400
Fax: 407.481.0505
www.windoorinc.com

4070 HORIZONTAL ROLLING WINDOW
XOX 1/3–1/3–1/3 SGP – HVHZ
NOTES

DRAWN:	DWG NO.	REV
N.G.	08–01996	–

SCALE	DATE	SHEET
NTS	05/08/2013	1 OF 7

STATE OF TEXAS
LUIS R. LOMAS
101889
LICENSED
PROFESSIONAL ENGINEER

Luis R. Lomas P.E.
TX No.: 101889

REVISIONS			
REV	DESCRIPTION	DATE	APPROVED

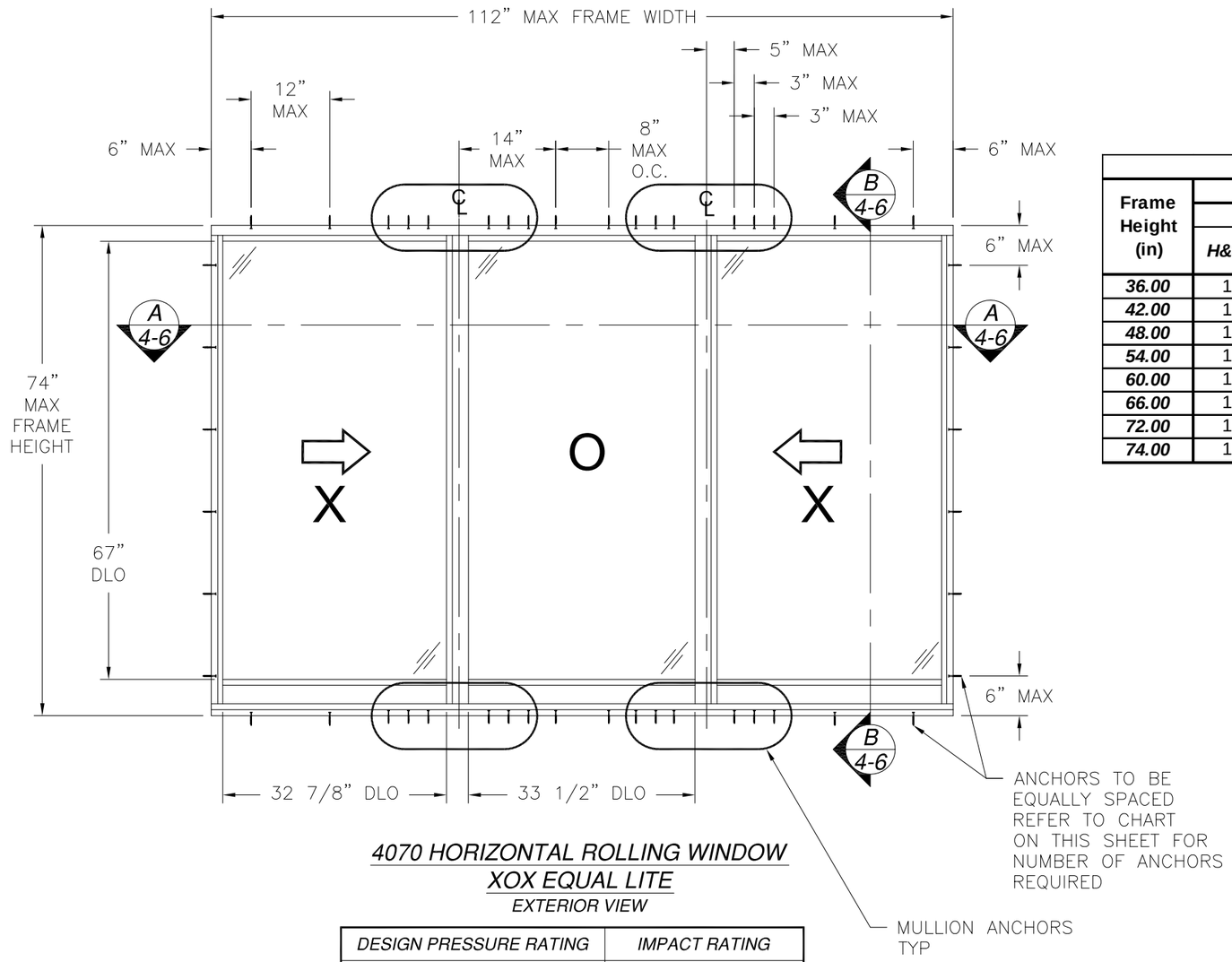

4070 HORIZONTAL ROLLING WINDOW
XOX EQUAL LITE
EXTERIOR VIEW

DESIGN PRESSURE RATING	IMPACT RATING
+90.0/-130.0PSF	LARGE AND SMALL MISSILE IMPACT

MISSILE LEVEL D, WIND ZONE 4, AND HVHZ WITH GLASS A & B

Number of anchor locations required

Frame Height (in)	Frame width (in)											
	72.00			90.00			108.00			112.00		
	H&S	Jamb	Mull H&S	H&S	Jamb	Mull H&S	H&S	Jamb	Mull H&S	H&S	Jamb	Mull H&S
36.00	1	3	2	2	3	2	2	3	2	2	3	2
42.00	1	3	2	2	3	3	2	3	3	2	3	3
48.00	1	4	3	2	4	3	2	4	3	2	4	4
54.00	1	4	3	2	4	4	2	4	4	2	4	4
60.00	1	4	4	2	4	4	2	5	5	2	5	5
66.00	1	5	4	2	5	5	2	5	5	2	5	5
72.00	1	5	4	2	5	5	2	6	6	2	6	6
74.00	1	5	5	2	5	5	2	6	6	2	6	6

SIGNED: 05/08/2013

WinDoor INCORPORATED
7500 AMSTERDAM DRIVE
ORLANDO, FL 32832
Phone: 407.481.8400
Fax: 407.481.0505
www.windoorinc.com

4070 HORIZONTAL ROLLING WINDOW
XOX 1/3-1/3-1/3 SGP - HVHZ
ELEVATION AND ANCHORING

DRAWN:	DWG NO.	REV
N.G.	08-01996	-
SCALE NTS	DATE 05/08/2013	SHEET 2 OF 7

Luis R. Lomas P.E.
TX No.: 101889

ITEM NO.:	PART NUMBER	DESCRIPTION	MANUFACTURER	MATERIAL
1	FS-06614	FRAME HEAD EQUAL LEG	KEYMARK	ALUMINUM 6063-T6
2	FS-07760	FRAME SILL PAN	KEYMARK	ALUMINUM 6063-T6
3	FS-07427	FRAME JAMB EQUAL LEG	KEYMARK	ALUMINUM 6063-T6
4	FS-07422	SILL TANK	KEYMARK	ALUMINUM 6063-T6
5	S-52726	SILL TRACK	KEYMARK	ALUMINUM 6063-T6
6	FS-06618	SASH TOP RAIL	KEYMARK	ALUMINUM 6063-T6
7	FH-07425	SASH BOTTOM RAIL	KEYMARK	ALUMINUM 6063-T6
8	FH-07418	SASH LOCK STILE	KEYMARK	ALUMINUM 6063-T6
9	FH-06615	FIXED MEETING STILE	KEYMARK	ALUMINUM 6063-T6
10	FH-06671	FRAME FILLER	KEYMARK	ALUMINUM 6063-T6
11	FH-06616	SASH INTERLOCK	KEYMARK	ALUMINUM 6063-T6
12	FS-06667	7/16" GLASS STOP	KEYMARK	ALUMINUM 6063-T6
13	FS-06619	15/16" GLASS STOP	KEYMARK	ALUMINUM 6063-T6
14	H4000-BL-SL202	SASH LOCK		
15	V-470-SS-ROHOU	ROLLER/HOUSING ASSEMBLY		
16	TP1104	GLASS STOP VINYL	TEAM PLASTICS	
17	W0600-BL-0500R	.187x.150 ULTRAFAB WEATHERSTRIP	ULTRAFAB	
18	121998	.187x.200 ULTRAFAB WEATHERSTRIP	ULTRAFAB	
19	122002	.187X.240 ULTRAFAB WEATHERSTRIP	ULTRAFAB	
20	122003	.187X.350 ULTRAFAB WEATHERSTRIP	ULTRAFAB	
21	W4000-BL-SCE42	1.3X1.75X.375 CLOSED CELL FOAM PAD	FRANK LOWE	NEOPRENE 45-55 DURO
22	131096	#6X3/4" FH SMS		
23	131014	#8X1" PH SMS		
24	S4000-XX-150	SCREEN HEAD, JAMB & SILL		
25	S10010-BL2200R	SCREEN SPLINE		
26	SBV-XX-0600Z	SCREEN CLOTH		
27	54080-ML-FB11	SCREEN CORNER KEY		
28	121104	GLASS SHIM	FRANK LOWE	DUROMETER 80
29	SIKA 552	SILICONE SEALANT	SIKA	
30	FS-07847	CLIP	KEYMARK	ALUMINUM 6063-T6

REVISIONS			
REV	DESCRIPTION	DATE	APPROVED

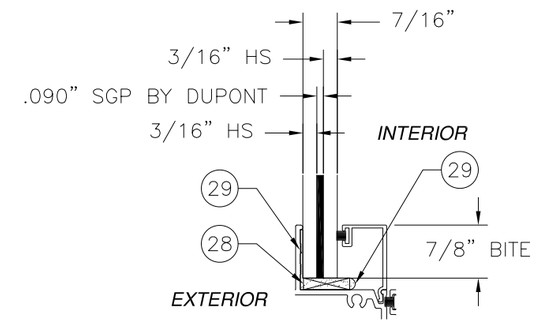

GLAZING DETAIL A

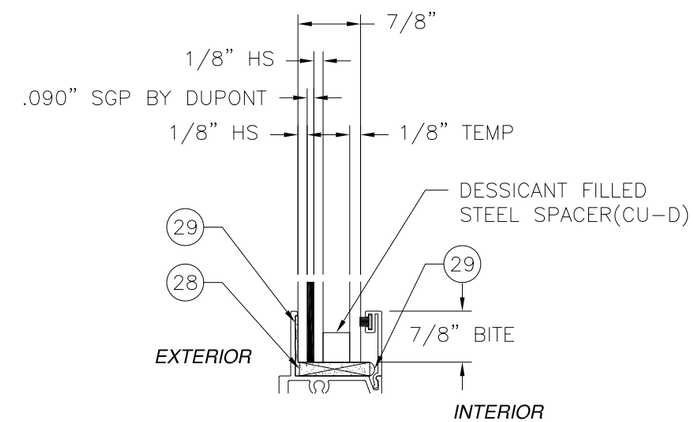

GLAZING DETAIL B

SIGNED: 05/08/2013

WinDoor INCORPORATED
7500 AMSTERDAM DRIVE
ORLANDO, FL 32832
Phone: 407.481.8400
Fax: 407.481.0505
www.windoorinc.com

4070 HORIZONTAL ROLLING WINDOW
XOX 1/3-1/3-1/3 SGP - HVHZ
B.O.M. AND GLAZING DETAILS

DRAWN:	DWG NO.	REV
N.G.	08-01996	-

SCALE	DATE	SHEET
NTS	05/08/2013	3 OF 7

STATE OF TEXAS
LUIS R. LOMAS
101889
LICENSED
PROFESSIONAL ENGINEER

Luis R. Lomas P.E.
TX No.: 101889

REVISIONS			
REV	DESCRIPTION	DATE	APPROVED

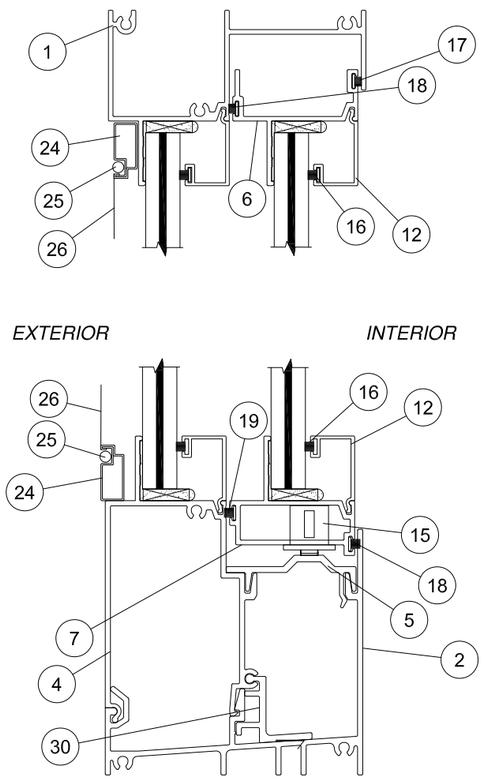

B/4 VERTICAL SECTION

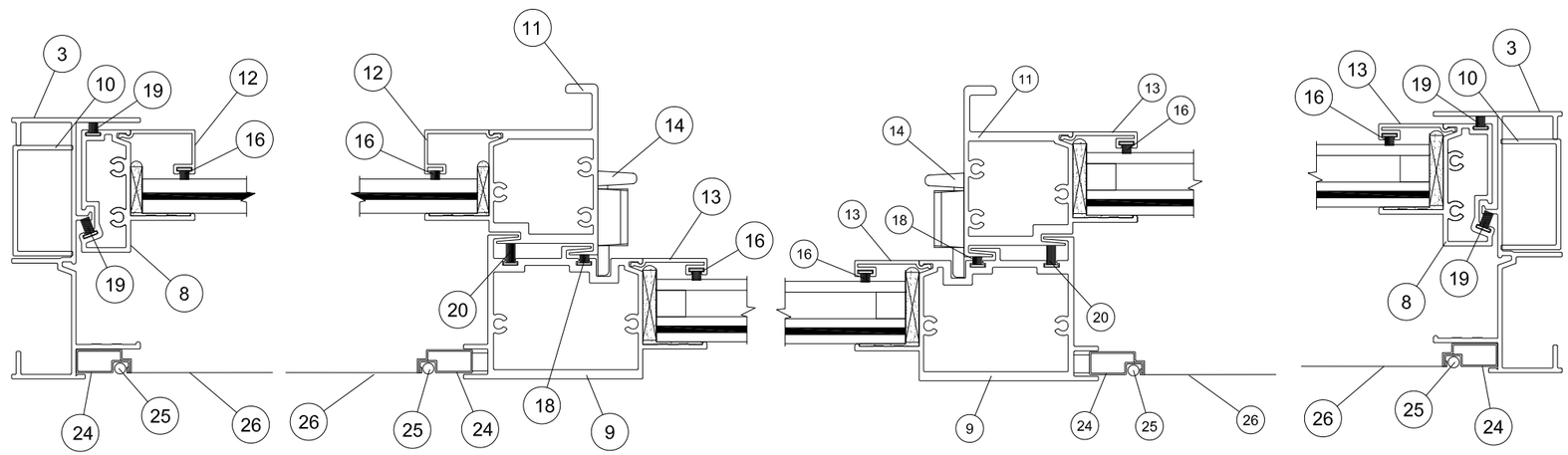

A/4 HORIZONTAL SECTION

SIGNED: 05/08/2013

WinDoor INCORPORATED
7500 AMSTERDAM DRIVE
ORLANDO, FL 32832
Phone: 407.481.8400
Fax: 407.481.0505
www.windoorinc.com

4070 HORIZONTAL ROLLING WINDOW
XOX 1/3-1/3-1/3 SGP - HVHZ
CROSS SECTIONS

DRAWN:	DWG NO.	REV
N.G.	08-01996	-

SCALE	DATE	SHEET
NTS	05/08/2013	4 OF 7

Luis R. Lomas P.E.
TX No.: 101889

REVISIONS			
REV	DESCRIPTION	DATE	APPROVED

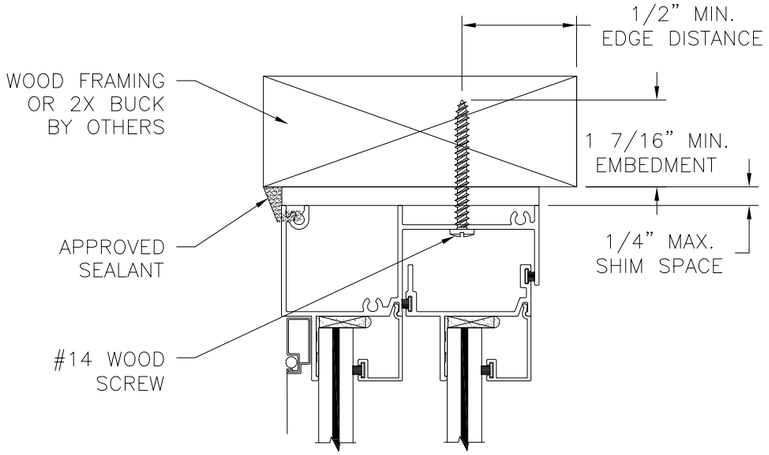

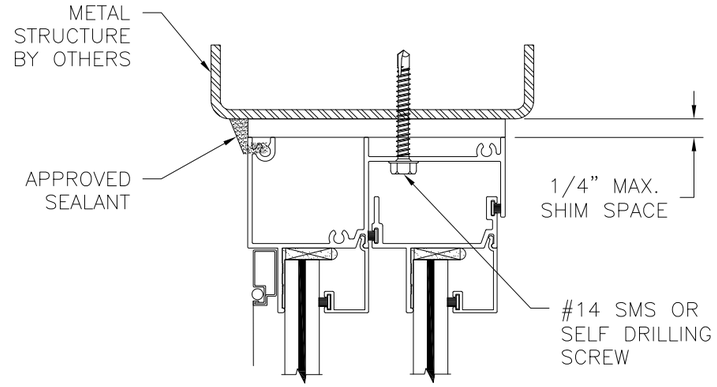

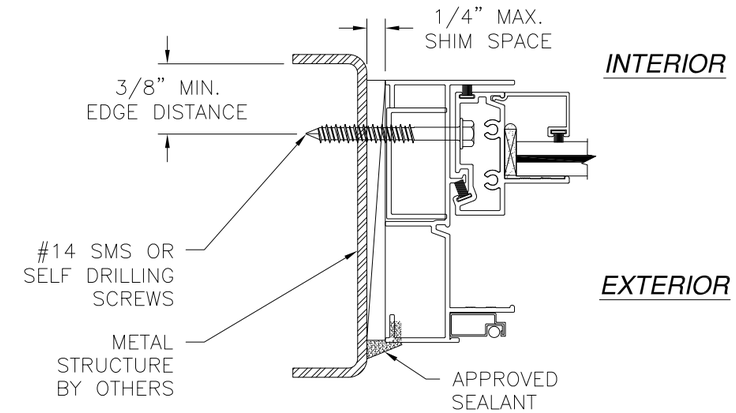

A/5 JAMB INSTALLATION DETAIL
METAL STRUCTURE INSTALLATION

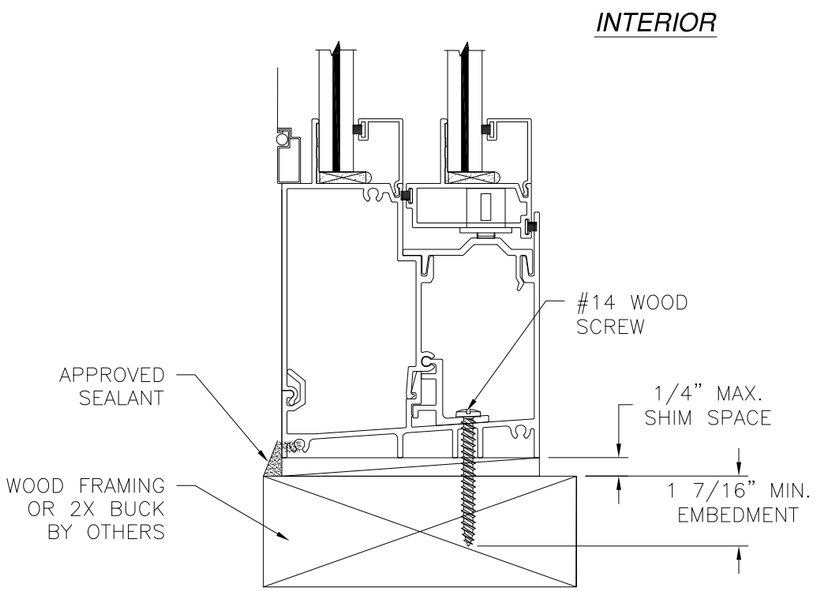

B/5 VERTICAL CROSS SECTION
WOOD FRAMING OR 2X BUCK INSTALLATION

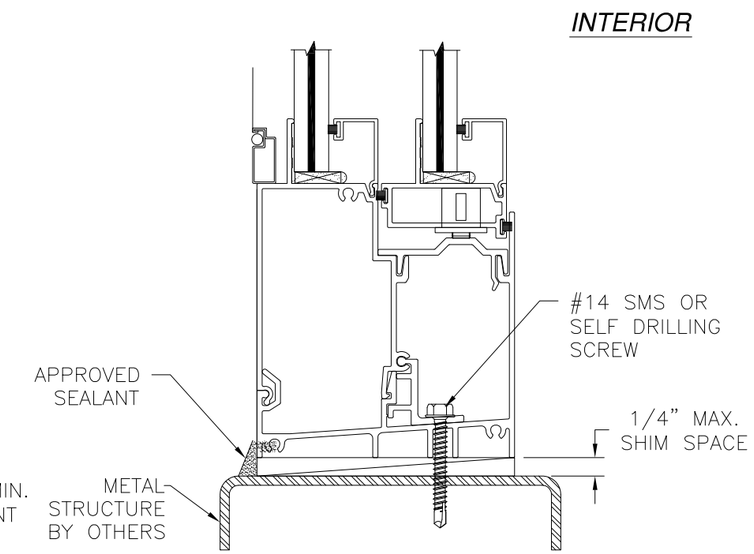

B/5 VERTICAL CROSS SECTION
METAL STRUCTURE INSTALLATION

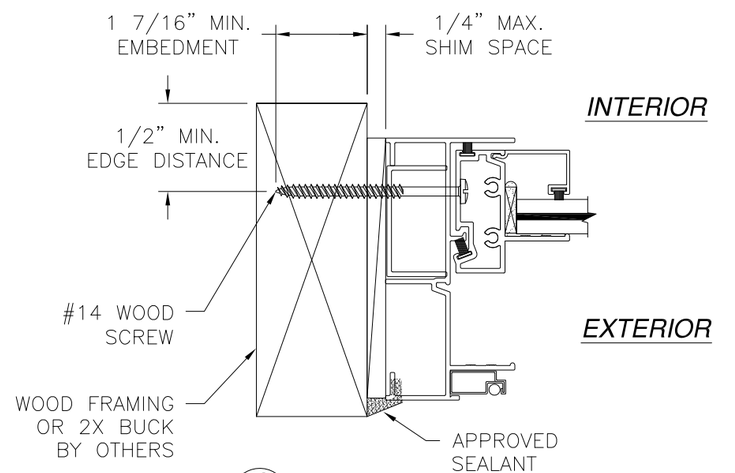

A/5 JAMB INSTALLATION DETAIL
WOOD FRAMING OR 2X BUCK INSTALLATION

SIGNED: 05/08/2013

NOTES:
1. INTERIOR AND EXTERIOR FINISHES, BY OTHERS, NOT SHOWN FOR CLARITY.
2. SEALANT JOINT BY OTHERS TO BE DESIGNED IN ACCORDANCE WITH ASTM E2112

WinDoor INCORPORATED
7500 AMSTERDAM DRIVE
ORLANDO, FL 32832
Phone: 407.481.8400
Fax: 407.481.0505
www.windoorinc.com

4070 HORIZONTAL ROLLING WINDOW
XOX 1/3-1/3-1/3 SGP - HVHZ
INSTALLATION DETAILS

DRAWN:	DWG NO.	REV
N.G.	08-01996	-
SCALE NTS	DATE 05/08/2013	SHEET 5 OF 7

Luis R. Lomas P.E.
TX No.: 101889

REVISIONS			
REV	DESCRIPTION	DATE	APPROVED

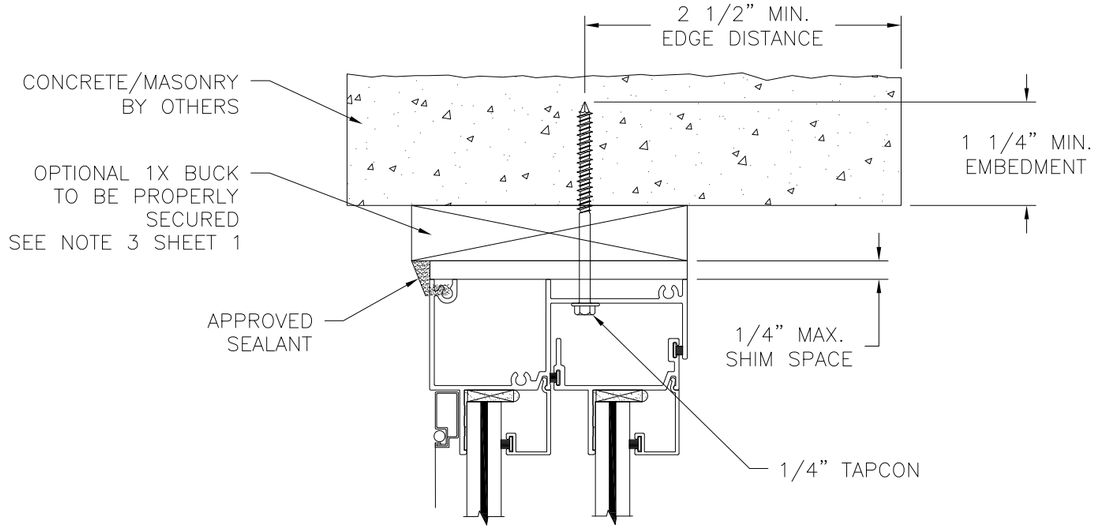

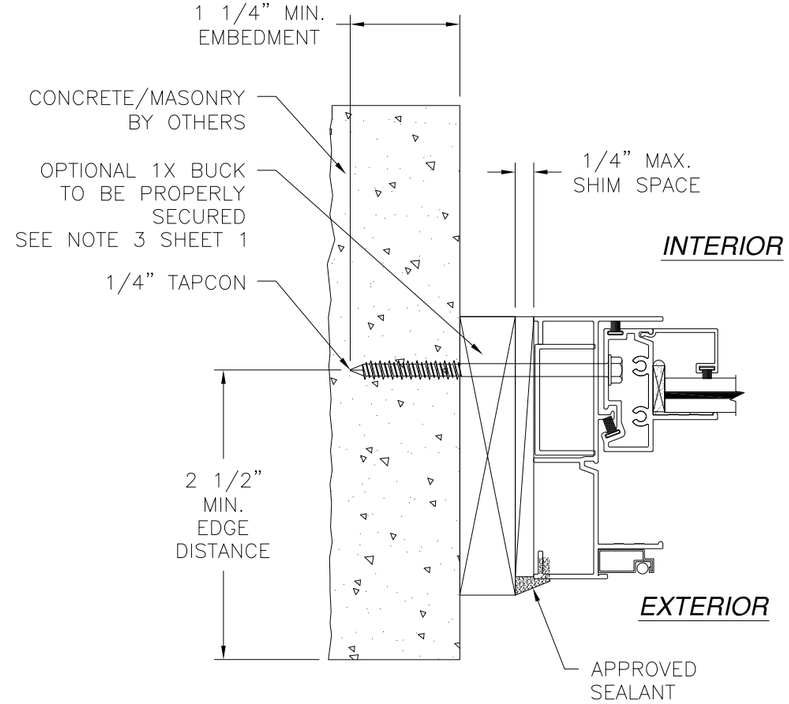

A/6 JAMB INSTALLATION DETAIL
CONCRETE/MASONRY INSTALLATION

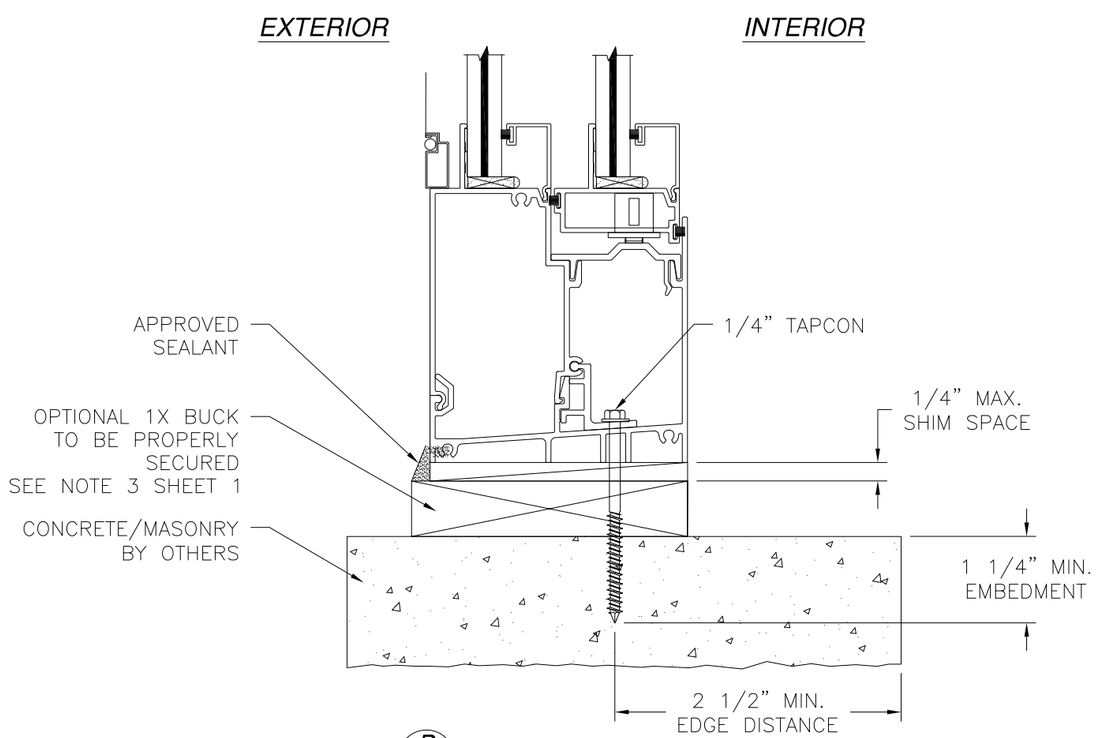

B/6 VERTICAL CROSS SECTION
CONCRETE/MASONRY INSTALLATION

NOTES:
1. INTERIOR AND EXTERIOR FINISHES, BY OTHERS, NOT SHOWN FOR CLARITY.
2. SEALANT JOINT BY OTHERS TO BE DESIGNED IN ACCORDANCE WITH ASTM E2112

SIGNED: 05/08/2013

WinDoor INCORPORATED
7500 AMSTERDAM DRIVE
ORLANDO, FL 32832
Phone: 407.481.8400
Fax: 407.481.0505
www.windoorinc.com

4070 HORIZONTAL ROLLING WINDOW
XOX 1/3-1/3-1/3 SGP - HVHZ
INSTALLATION DETAILS

DRAWN:	DWG NO.	REV
N.G.	08-01996	-
SCALE NTS	DATE 05/08/2013	SHEET 6 OF 7

Luis R. Lomas P.E.
TX No.: 101889

REVISIONS			
REV	DESCRIPTION	DATE	APPROVED

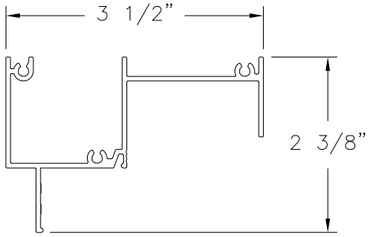

1 FRAME HEAD EQUAL LEG
ALUMINUM 6063-T6 .059" THICK

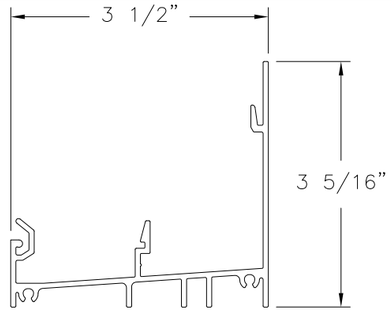

2 FRAME SILL PAN
ALUMINUM 6063-T6 .069" THICK

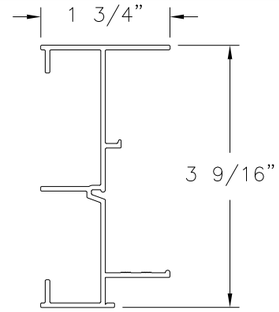

3 FRAME JAMB EQUAL LEG
ALUMINUM 6063-T6 .051" THICK

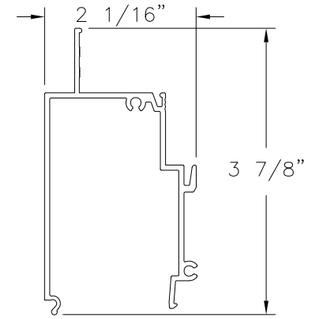

4 SILL TANK
ALUMINUM 6063-T6 .069" THICK

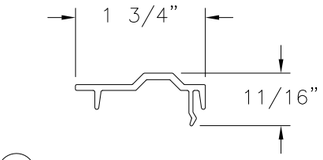

5 SILL TRACK
ALUMINUM 6063-T6 .069" THICK

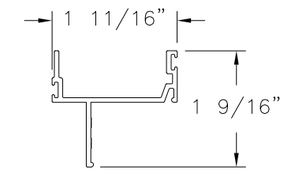

6 SASH TOP RAIL
ALUMINUM 6063-T6 .069" THICK

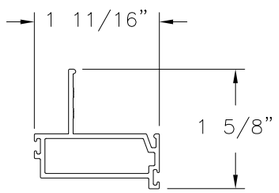

7 SASH BOTTOM RAIL
ALUMINUM 6063-T6 .059" THICK

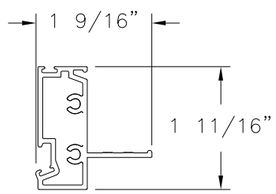

8 SASH LOCK STILE
ALUMINUM 6063-T6 .047" THICK

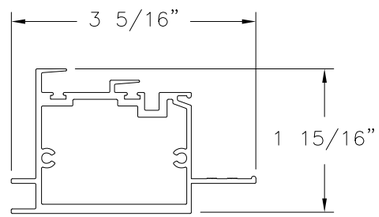

9 FIXED MEETING STILE
ALUMINUM 6063-T6 .059" THICK

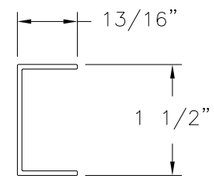

10 FRAME FILLER
ALUMINUM 6063-T6 .059" THICK

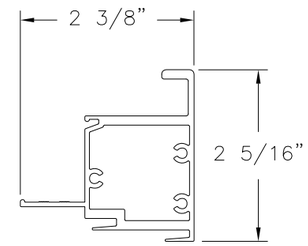

11 SASH INTERLOCK
ALUMINUM 6063-T6 .047" THICK

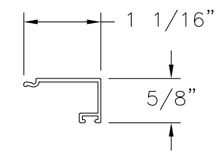

12 7/16" GLASS STOP
ALUMINUM 6063-T6 .047" THICK

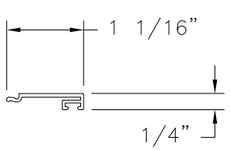

13 15/16" GLASS STOP
AL 6063-T5 .118" THICK

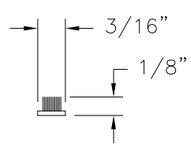

17 WEATHERSTRIP
PLASTIC

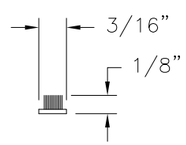

18 WEATHERSTRIP
PLASTIC

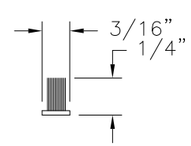

19 WEATHERSTRIP
PLASTIC

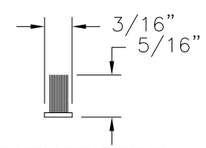

20 WEATHERSTRIP
PLASTIC

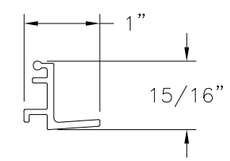

30 CLIP
ALUMINUM 6063-T6 .047" THICK

SIGNED: 05/08/2013

WinDoor INCORPORATED
7500 AMSTERDAM DRIVE
ORLANDO, FL 32832
Phone: 407.481.8400
Fax: 407.481.0505
www.windoorinc.com

4070 HORIZONTAL ROLLING WINDOW
XOX 1/3-1/3-1/3 SGP - HVHZ
COMPONENTS

DRAWN:	DWG NO.	REV
N.G.	08-01996	-

SCALE	DATE	SHEET
NTS	05/08/2013	7 OF 7

Luis R. Lomas P.E.
TX No.: 101889