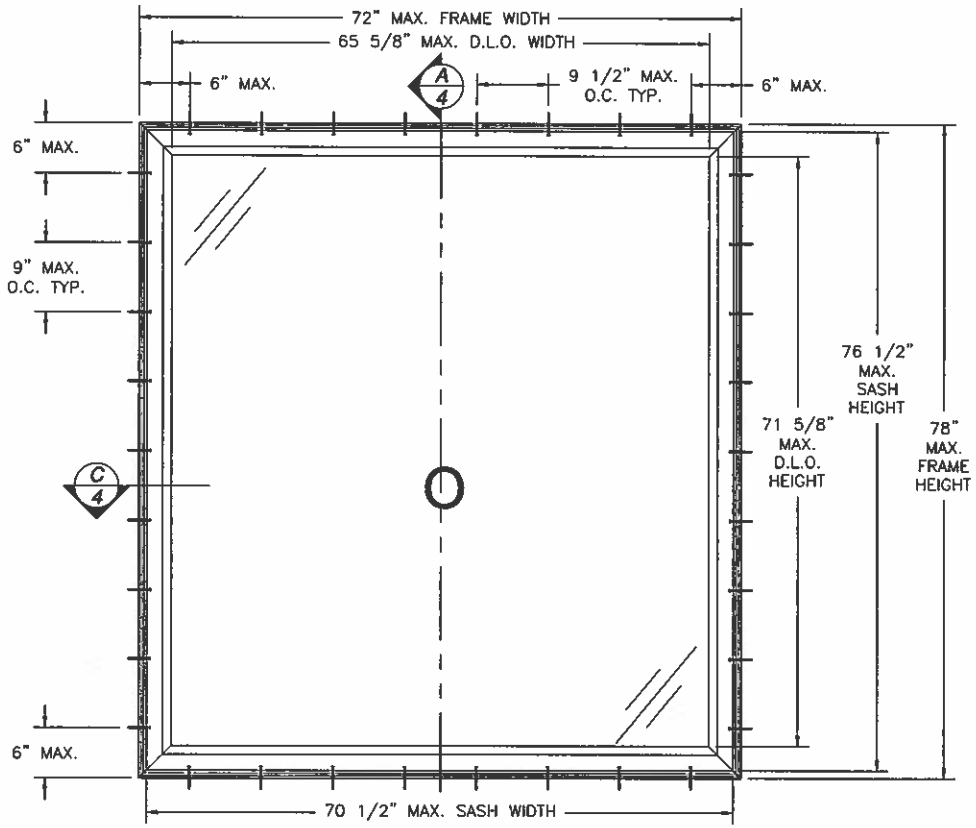

SERIES V-630 PVC SINGLE FIXED CASEMENT WINDOW

EXTERIOR VIEW

DESIGN PRESSURE RATING	IMPACT RATING
+80.0 PSF -90.0 PSF	NONE

REVISIONS			
REV	DESCRIPTION	DATE	APPROVED

NOTES:

1) THE PRODUCT SHOWN HEREIN IS DESIGNED AND MANUFACTURED TO COMPLY WITH REQUIREMENTS OF THE 2006 INTERNATIONAL BUILDING CODE AND 2006 INTERNATIONAL RESIDENTIAL CODE WITH TEXAS STATE MODIFICATIONS.
2) WOOD FRAMING, 2X BACKED STEEL FRAMING AND MASONRY OPENING TO BE DESIGNED AND ANCHORED TO PROPERLY TRANSFER ALL LOADS TO STRUCTURE. FRAMING AND MASONRY OPENING IS THE RESPONSIBILITY OF THE ARCHITECT OR ENGINEER OF RECORD.
3) 1X BUCK OVER MASONRY/CONCRETE IS OPTIONAL. WHERE 1X BUCK IS NOT USED DISSIMILAR MATERIALS MUST BE SEPARATED WITH APPROVED COATING OR MEMBRANE. SEPARATION OF DISSIMILAR MATERIALS IS THE RESPONSIBILITY OF THE ARCHITECT OR ENGINEER OF RECORD.
4) ALLOWABLE STRESS INCREASE OF 1/3 WAS NOT USED IN THE DESIGN OF THE PRODUCT SHOWN HEREIN. WIND LOAD DURATION FACTOR Cd=1.6 WAS USED FOR WOOD ANCHOR CALCULATIONS.
5) FRAME AND SASH MATERIAL: EXTRUDED RIGID PVC
6) UNITS MUST BE GLAZED PER ASTM E 300. SEE SHEET 5 FOR GLAZING DETAIL
7) APPROVED IMPACT PROTECTIVE SYSTEM IS REQUIRED FOR THIS PRODUCT IN WIND BORNE DEBRIS REGIONS.
8) SHIM AS REQUIRED AT EACH INSTALLATION ANCHOR WITH LOAD BEARING SHIM. SHIM WHERE SPACE OF 1/16" OR GREATER OCCURS. MAXIMUM ALLOWABLE SHIM STACK TO BE 1/4".
9) FOR ANCHORING WINDOW FRAME INTO MASONRY/CONCRETE USE 3/16" ITW TAPCONS WITH SUFFICIENT LENGTH TO ACHIEVE A 1 1/4" MINIMUM EMBEDMENT INTO SUBSTRATE WITH 2 5/8" MINIMUM EDGE DISTANCE. LOCATE ANCHORS AS SHOWN IN ELEVATIONS AND INSTALLATION DETAILS.
10) FOR ANCHORING WINDOW FRAME INTO 2X WOOD FRAMING, 2X BUCK OR 2X BACKED 20GA. STEEL FRAMING USE #10 WOOD SCREW WITH SUFFICIENT LENGTH TO ACHIEVE A 1 3/8" MINIMUM EMBEDMENT INTO SUBSTRATE WITH 3/4" MINIMUM EDGE DISTANCE. LOCATE ANCHORS AS SHOWN IN ELEVATIONS AND INSTALLATION DETAILS.
11) ALL FASTENERS TO BE CORROSION RESISTANT.
12) INSTALLATION ANCHORS SHALL BE INSTALLED IN ACCORDANCE WITH ANCHOR MANUFACTURER'S INSTALLATION INSTRUCTIONS, AND ANCHORS SHALL NOT BE USED IN SUBSTRATES WITH STRENGTHS LESS THAN THE MINIMUM STRENGTH SPECIFIED BELOW:
    A. WOOD – MINIMUM SPECIFIC GRAVITY OF G=0.42
    B. CONCRETE – MINIMUM COMPRESSIVE STRENGTH OF 2,000 PSI.
    C. MASONRY – STRENGTH CONFORMANCE TO ASTM C-90, GRADE N, TYPE 1 (OR GREATER).
    D. STEEL FRAMING: 2X BACKED 20GA. (.036" MIN.) STEEL FRAMING.
13) SERIES V-600 IS OPERABLE CASEMENT AND SERIES V-630 IS FIXED CASEMENTS. SEE CROSS SECTIONS SHEETS 4 AND 5.

SIGNED: 01/30/2012

TABLE OF CONTENTS

SHEET NO.	DESCRIPTION
1 – 3	ELEVATION, ANCHORING LAYOUT AND NOTES
4	BILL OF MATERIALS AND CROSS SECTIONS
5	CROSS SECTIONS, CORNER AND GLAZING DETAIL
6 – 9	INSTALLATION DETAILS
10	COMPONENTS
11	HARDWARE LAYOUT

WinDoor INCORPORATED
7500 AMSTERDAM DRIVE
ORLANDO, FL 32832
Phone: 407.481.5400
Fax: 407.481.0505
www.windoorinc.com

SERIES V-600/V-630 PVC SINGLE AND FIELD MULLED CASEMENT WINDOW – NON-IMPACT ELEVATION, ANCHORING LAYOUT AND NOTES

DRAWN:	DWG NO.	REV
TJH	08-01133	–
SCALE NTS	DATE 11/09/10	SHEET 1 OF 11

STATE OF TEXAS
LUIS R. LOMAS
101889
LICENSED
PROFESSIONAL ENGINEER

Luis R. Lomas P.E.
Texas No. 101889

REVISIONS			
REV	DESCRIPTION	DATE	APPROVED

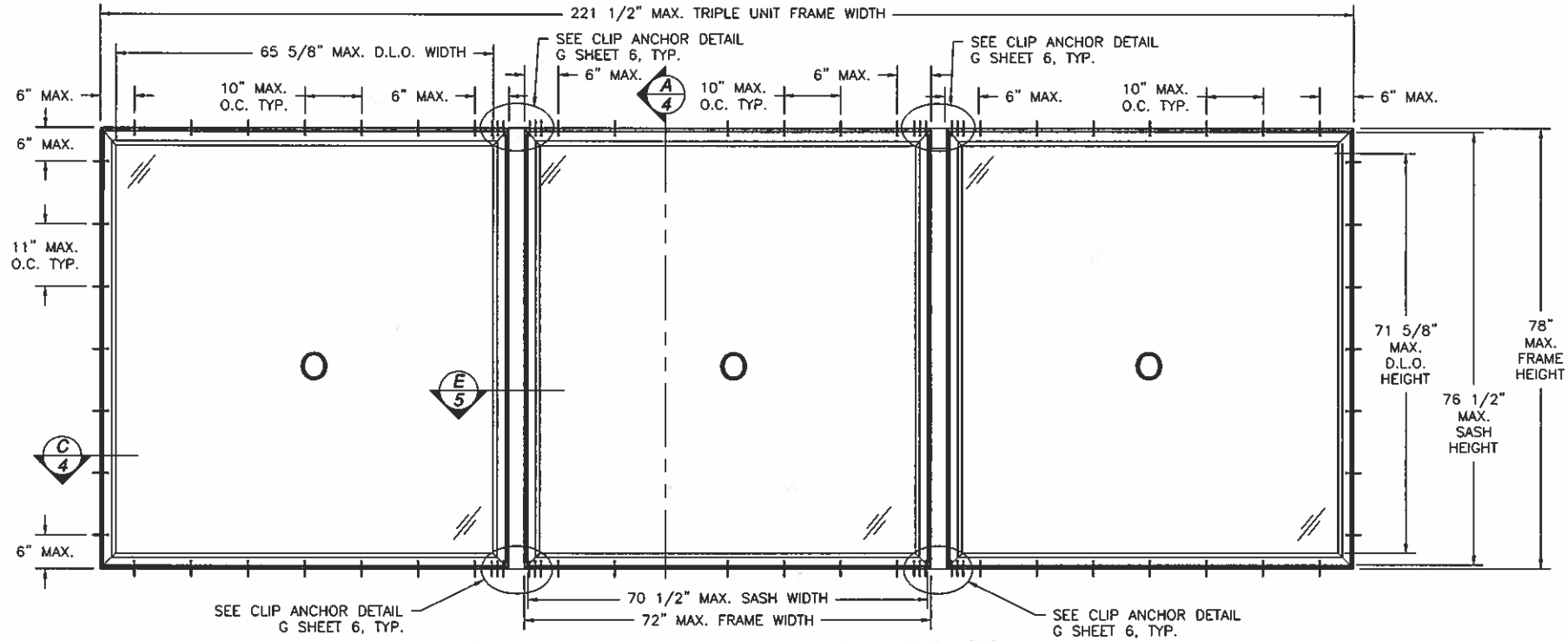

SERIES V-630 PVC FIELD MULLED FIXED CASEMENT WINDOW

EXTERIOR VIEW

TRIPLE MULLED UNIT SHOWN, UNLIMITED NUMBER OF UNITS MAY BE MULLED TOGETHER AS LONG AS INDIVIDUAL UNIT SIZE DOES NOT EXCEED WIDTH AND HEIGHT SHOWN ABOVE

SEE NOTE SHEET 3

DESIGN PRESSURE RATING	IMPACT RATING
+80.0 PSF -90.0 PSF	NONE

NOTES:

1) OPERABLE AND FIXED UNITS MAY BE MULLED TOGETHER. OPERABLE UNITS MAY NOT EXCEED INDIVIDUAL UNIT SIZE SHOWN IN SHEET 3. FIXED UNITS MAY NOT EXCEED INDIVIDUAL UNIT SIZE SHOWN IN THIS SHEET.
2) WHEN AN OPERABLE WINDOW IS PART OF MULLED CONFIGURATION AND FIXED UNIT WIDTH IS LARGER THAN 37" THE LOWER DESIGN PRESSURE OF THE FIXED MULLED UNIT WILL APPLY. SEE THIS SHEET FOR DESIGN PRESSURE.
3) FOR MULLED UNITS CONTAINING OPERABLE AND FIXED WINDOWS 37" WIDE OR SMALLER SEE SHEET 3 FOR DESIGN PRESSURE.

WinDoor INCORPORATED
7500 AMSTERDAM DRIVE
ORLANDO, FL 32832
Phone: 407.481.8400
Fax: 407.481.0505
www.windoorinc.com

SERIES V-600/V-630 PVC SINGLE AND FIELD MULLED CASEMENT WINDOW - NON-IMPACT ELEVATION, ANCHORING LAYOUT AND NOTES

DRAWN:	DWG NO.	REV
TJH	08-01133	-
SCALE NTS	DATE 11/09/10	SHEET 2 OF 11

STATE OF TEXAS
LUIS R. LOMAS
101889
LICENSED
PROFESSIONAL ENGINEER

Luis R. Lomas P.E.
Texas No. 101889

REVISIONS			
REV	DESCRIPTION	DATE	APPROVED

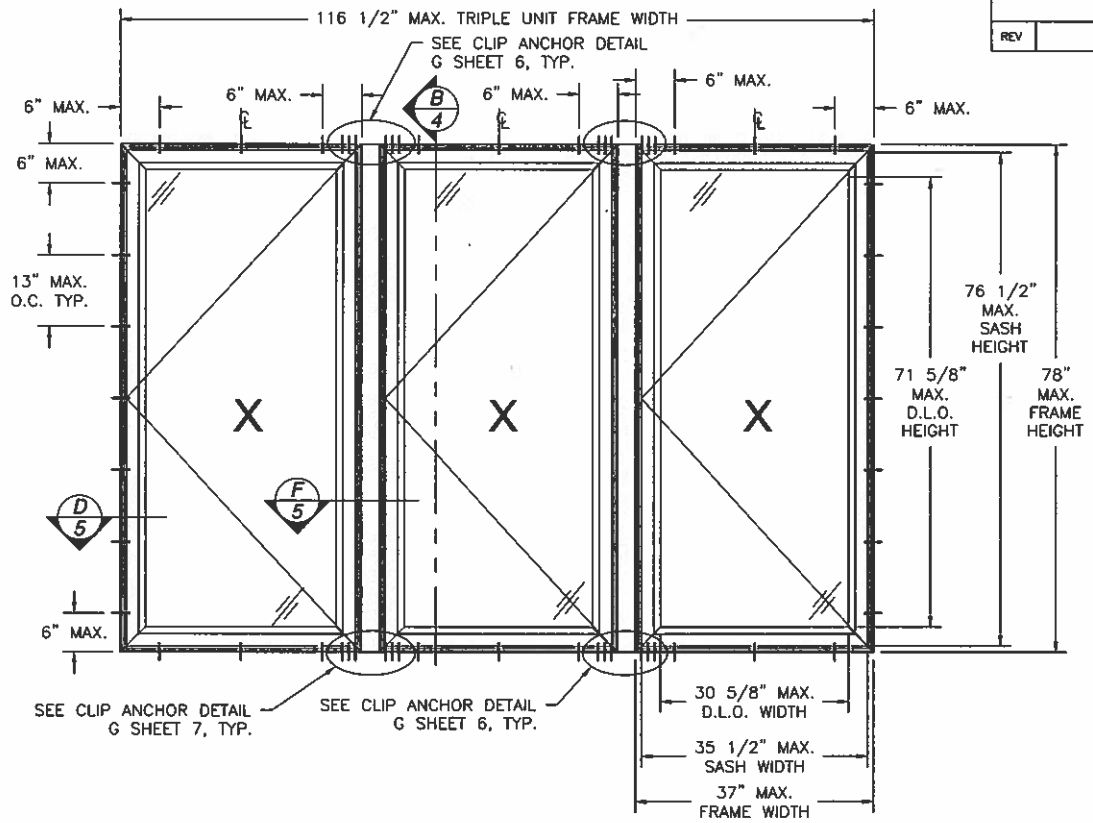

SERIES V-600 PVC FIELD MULLED OPERABLE CASEMENT WINDOW

EXTERIOR VIEW

TRIPLE MULLED UNIT SHOWN, UNLIMITED NUMBER OF UNITS MAY BE MULLED TOGETHER AS LONG AS INDIVIDUAL UNIT SIZE DOES NOT EXCEED WIDTH AND HEIGHT SHOWN ABOVE. SEE NOTE SHEET 3

DESIGN PRESSURE RATING	*IMPACT RATING*
+80.0 PSF *-120.0 PSF*	*NONE*

NOTES:

1) FIXED AND OPERABLE UNITS MAY BE MULLED TOGETHER. OPERABLE UNITS MAY NOT EXCEED INDIVIDUAL UNIT SIZE SHOWN IN THIS SHEET. FIXED UNITS MAY NOT EXCEED INDIVIDUAL UNIT SIZE SHOWN IN SHEET 2.
2) WHEN A FIXED WINDOW IS PART OF MULLED CONFIGURATION AND FIXED UNIT WIDTH IS LARGER THAN 37" THE LOWER DESIGN PRESSURE OF THE FIXED MULLED UNIT WILL APPLY. SEE SHEET 2 FOR DESIGN PRESSURE.
3) FOR MULLED UNITS CONTAINING OPERABLE AND FIXED WINDOWS 37" WIDE OR SMALLER SEE THIS SHEET FOR DESIGN PRESSURE.

WinDoor INCORPORATED
7500 AMSTERDAM DRIVE
ORLANDO, FL 32832
Phone: 407.481.8400
Fax: 407.481.0505
www.windoorinc.com

SERIES V-600/V-630 PVC SINGLE AND FIELD MULLED CASEMENT WINDOW - NON-IMPACT ELEVATION, ANCHORING LAYOUT AND NOTES

DRAWN:	DWG NO.	REV
TJH	08-01133	-
SCALE NTS	DATE 11/09/10	SHEET 3 OF 11

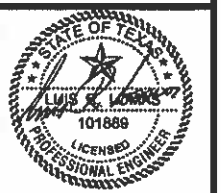

Luis R. Lomas P.E.
Texas No. 101889

PARTS LIST				
NO.	PART NUMBER	DESCRIPTION	MANUFACTURER	MATERIAL
1	101.214	FRAME, HEAD, SILL AND JAMB	VEKA	RIGID PVC
2	101.214	PANEL FRAME, STILE AND RAIL	VEKA	RIGID PVC
3	FS-05688	FRAME UPPER SCREW RECEIVER	KEYMARK	ALUMINUM 6063-T6
4	FS-05689	FRAME LOWER SCREW RECEIVER	KEYMARK	ALUMINUM 6063-T6
5	FS-05690	FRAME SCREW BACKER	KEYMARK	ALUMINUM 6063-T6
6	FS-05691	TRACK & SNUBBER SCREW RECEIVER	KEYMARK	ALUMINUM 6063-T6
7	FS-05692	VENT INT. SCREW RECEIVER & REBAR	KEYMARK	ALUMINUM 6063-T6
8	FS-05693	VENT EXTERIOR REBAR	KEYMARK	ALUMINUM 6063-T6
9	20008	VENT SNUBBER	TRUTH HARDWARE	
10		NON-IMPACT GLAZING		
11	V60X-AC-13	1" GLAZING BEAD	MOR-X	RIGID PVC
12	24.33	MULTI-POINT LOCK AND KEEPER SET	TRUTH HARDWARE	
13	50.00/50.50	OPERATOR AND BRACKET	TRUTH HARDWARE	
14	14.97.00	SLIDE HINGE	TRUTH HARDWARE	
15	AP-425	KERF APTUS VENT BULB SEAL	SCHLEGAL	PLASTIC
16		1/8" x 1 1/16" x 2" SET BLOCK	FRANK LOWE	NEOPRENE
17		#8 x 3/4" FH SELF DRILLING SCREW		STAINLESS STEEL
18		#8 x 1/2" FH SELF DRILLING SCREW		STAINLESS STEEL
19		#8 x 5/8" FH SELF DRILLING SCREW		STAINLESS STEEL
20		#10 x 1" PH SELF DRILLING SCREW		STAINLESS STEEL
21	FS-03856	MULL ANCHOR CLIP 4" x 6 1/2"	KEYMARK	ALUMINUM 6063-T6
22	SIKAFLEX 552	GLAZING COMPOUND	SIKA	URETHANE
23		SEALANT		SILICONE
24		#10 x 2" FH SELF DRILLING SCREW		STAINLESS STEEL
25	600A01	FIELD MULL	KEYMARK	ALUMINUM 6063-T6
26	FS-05696	F-LITE SPACER & SCREW RECEIVER	KEYMARK	ALUMINUM 6063-T6
27		#10 x 1 3/4" FH S-DRILLING SCREW		STAINLESS STEEL
28	V60X-AC-01	FIXED VENT SCREW COVER	MOR-X	RIGID PVC
29	FS-05694	F-VENT ATTACH SCREW BACKUP	KEYMARK	ALUMINUM 6063-T6
30	279500	20MM THERMAL STRUT	TECHNOFORM	POLYAMIDE 66
31		#12 x 3/4" PH S-DRILLING SCREW		STAINLESS STEEL
32		#10 x 1 1/4" FH S-DRILLING SCREW		STAINLESS STEEL
33	V60X-AC-12A	FIELD MULL COVER	MOR-X	RIGID PVC

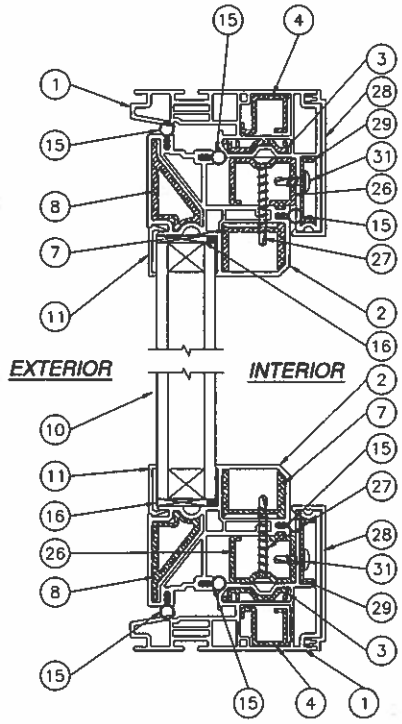

A/4 VERTICAL CROSS SECTION

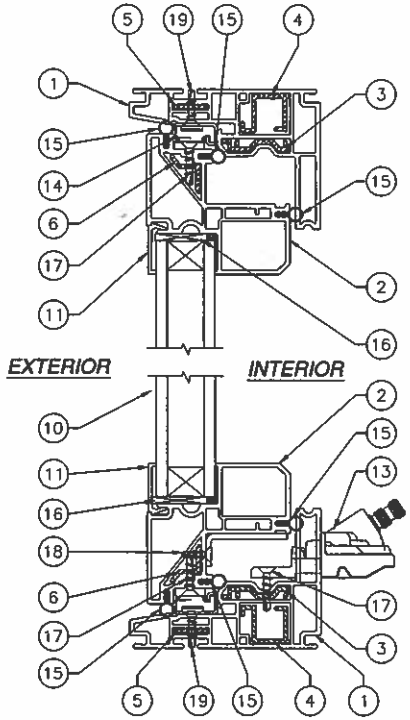

B/4 VERTICAL CROSS SECTION

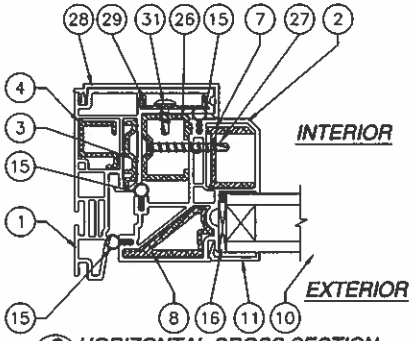

C/4 HORIZONTAL CROSS SECTION

REVISIONS			
REV	DESCRIPTION	DATE	APPROVED

WinDoor INCORPORATED
7500 AMSTERDAM DRIVE
ORLANDO, FL 32832
Phone: 407.481.8400
Fax: 407.481.0505
www.windoorinc.com

SERIES V-600/V-630 PVC SINGLE AND FIELD MULLED CASEMENT WINDOW - NON-IMPACT BILL OF MATERIALS AND CROSS SECTIONS

DRAWN: TJH	DWG NO. 08-01133	REV --
SCALE NTS	DATE 11/09/10	SHEET 4 OF 11

STATE OF TEXAS
LUIS R. LOMAS
101889
LICENSED
PROFESSIONAL ENGINEER

Luis R. Lomas P.E.
Texas No. 101889

REVISIONS			
REV	DESCRIPTION	DATE	APPROVED

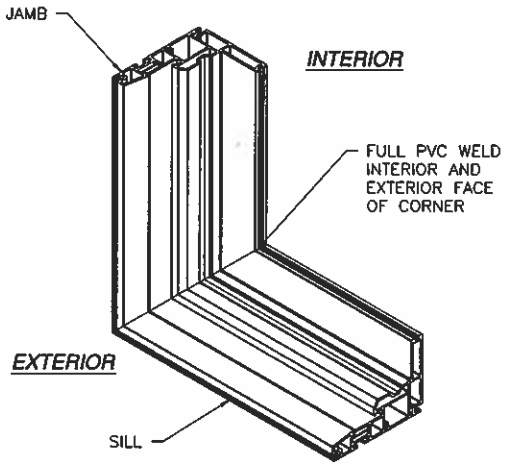

FRAME CONER CONSTRUCTION DETAIL

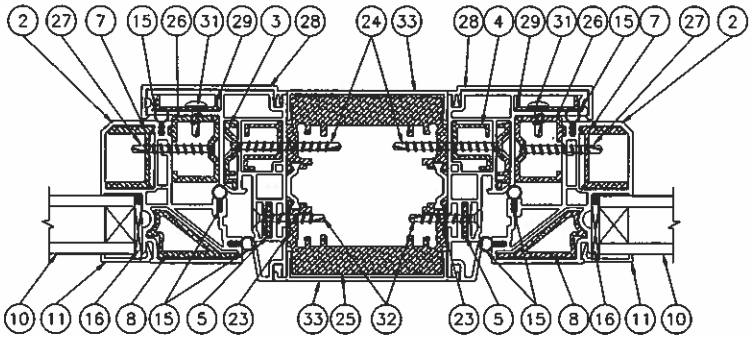

E/5 HORIZONTAL CROSS SECTION

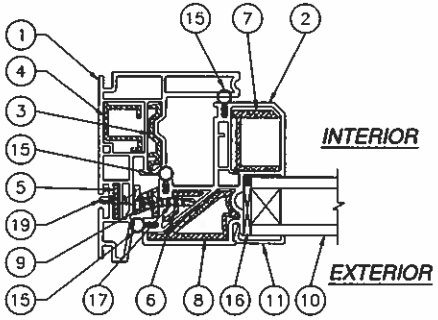

D/5 HORIZONTAL CROSS SECTION

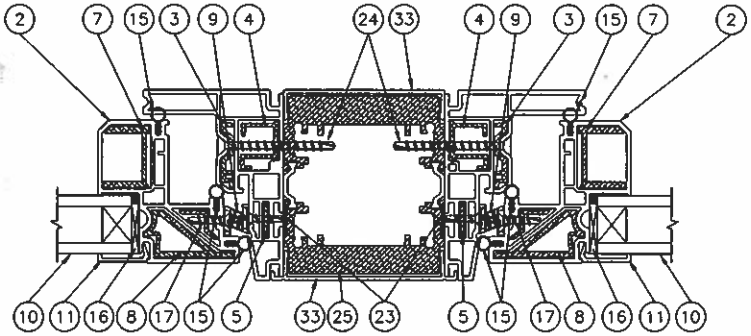

F/5 HORIZONTAL CROSS SECTION

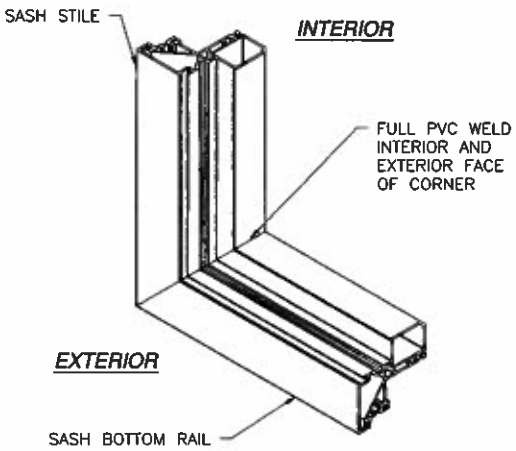

SASH CONER CONSTRUCTION DETAIL

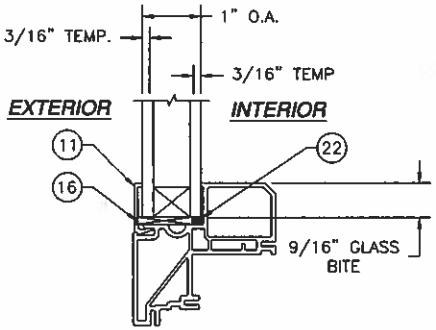

GLAZING DETAIL

WinDoor INCORPORATED
7500 AMSTERDAM DRIVE
ORLANDO, FL 32832
Phone: 407.481.8400
Fax: 407.481.0505
www.windoorinc.com

SERIES V-600/V-630 PVC SINGLE AND FIELD MULLED CASEMENT WINDOW – NON-IMPACT CROSS SECTIONS, CORNER AND GLAZING DETAILS

DRAWN: TJH	DWG NO. 08-01133	REV –
SCALE NTS	DATE 11/09/10	SHEET 5 OF 11

STATE OF TEXAS
LUIS R. LOMAS
101889
LICENSED
PROFESSIONAL ENGINEER

Luis R. Lomas P.E.
Texas No. 101889

REVISIONS			
REV	DESCRIPTION	DATE	APPROVED

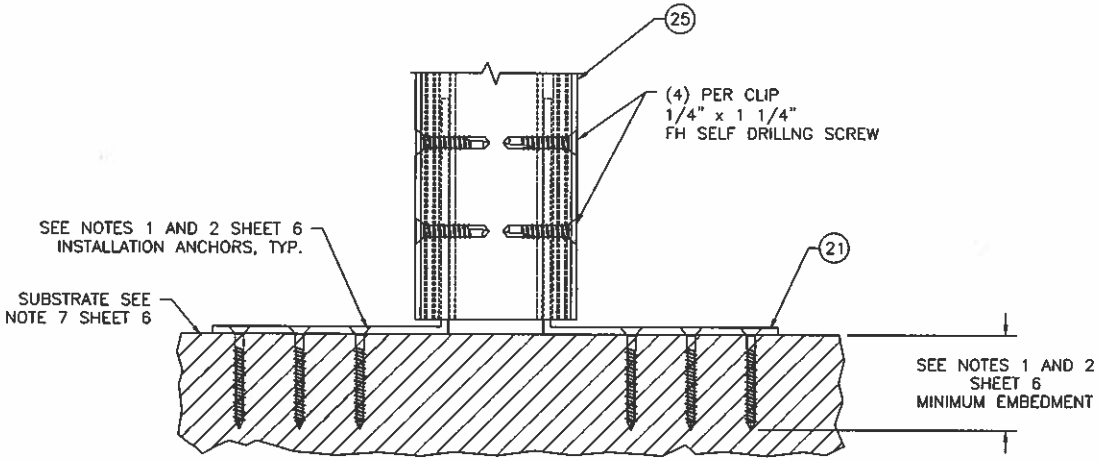

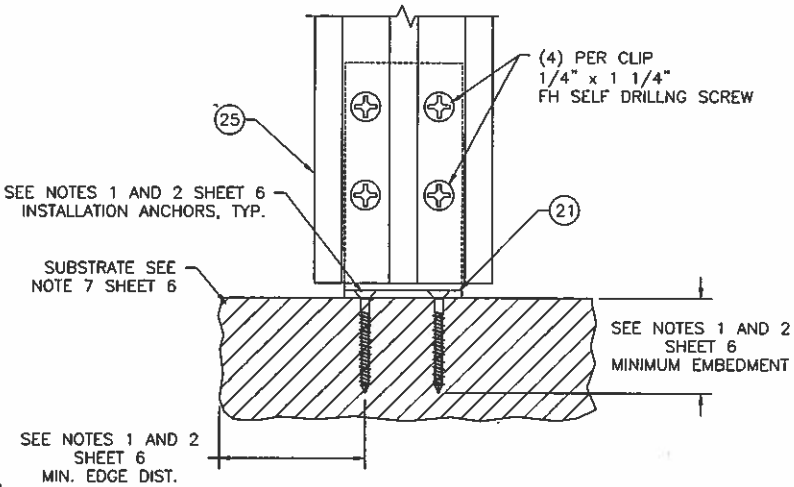

DETAIL G

HEAD AND SILL CLIP INSTALLATION

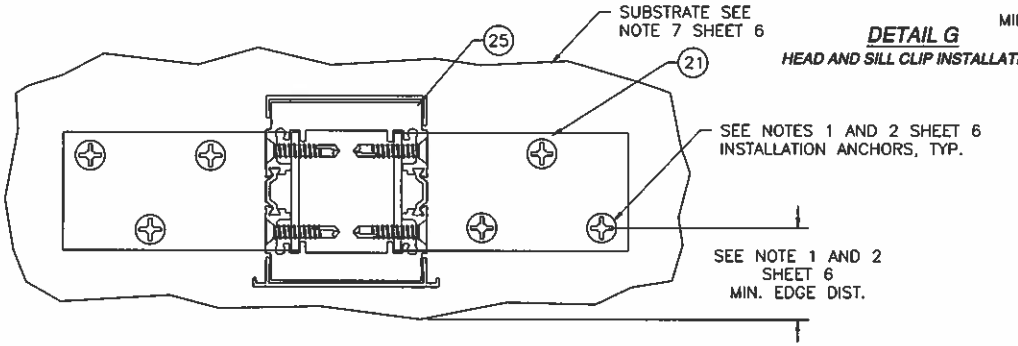

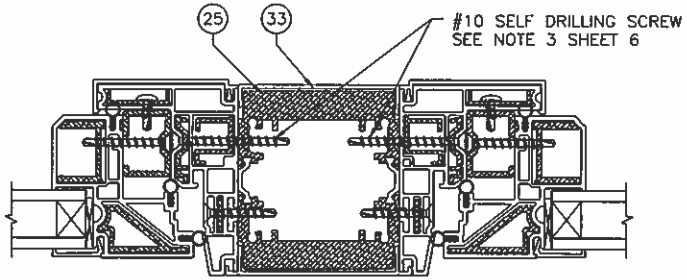

DETAIL H

WINDOW TO MULLION INSTALLATION, FIXED/FIXED SHOWN, FIXED/OPERABLE AND OPERABLE/OPERABLE SIMILAR

MULLION ANCHORING NOTES:

1) FOR ANCHORING INTO CONCRETE USE 1/4" ITW TAPCONS WITH SUFFICIENT LENGTH TO ACHIEVE A 1 3/4" MINIMUM EMBEDMENT INTO SUBSTRATE WITH 2 1/2" MINIMUM EDGE DISTANCE. LOCATE ANCHORS AS SHOWN IN INSTALLATION DETAILS.
2) FOR ANCHORING INTO WOOD FRAMING, 2X BUCK OR 2X BACKED 20GA. MINIMUM STEEL FRAMING USE #14 WOOD SCREW WITH SUFFICIENT LENGTH TO ACHIEVE A 1 13/16" MINIMUM EMBEDMENT INTO SUBSTRATE WITH 1" MINIMUM EDGE DISTANCE. LOCATE ANCHORS AS SHOWN IN INSTALLATION DETAILS.
3) FOR ATTACHING WINDOW UNITS TO MULLION USE #10 SELF DRILLING SCREWS WITH SUFFICIENT LENGTH TO ACHIEVE A MINIMUM EMBEDMENT OF THREE THREADS PAST THE MULLION WALL. LOCATE SCREWS 6" FROM EACH MULLION END AND 9 1/4" MAX. O.C. THEREAFTER. STAGGER SCREWS AT EACH WINDOW.
5) FOR WINDOW UNITS ANCHORING TO SUBSTRATE REFER TO SHEETS 1, 2, 7, 8 AND 9.
6) ALL FASTENERS TO BE CORROSION RESISTANT.
7) INSTALLATION ANCHORS SHALL BE INSTALLED IN ACCORDANCE WITH ANCHOR MANUFACTURER'S INSTALLATION INSTRUCTIONS, AND ANCHORS SHALL NOT BE USED IN SUBSTRATES WITH STRENGTHS LESS THAN THE MINIMUM STRENGTH SPECIFIED BELOW:
   A. WOOD – MINIMUM SPECIFIC GRAVITY OF G=0.42
   B. CONCRETE – MINIMUM COMPRESSIVE STRENGTH OF 2,000 PSI.
   C. STEEL FRAMING: 2X BACKED 20GA. (.036" MIN.) STEEL FRAMING.

WinDoor INCORPORATED
7500 AMSTERDAM DRIVE
ORLANDO, FL 32832
Phone: 407.481.8400
Fax: 407.481.0505
www.windoorinc.com

SERIES V-600/V-630 PVC SINGLE AND FIELD MULLED CASEMENT WINDOW – NON-IMPACT INSTALLATION DETAILS AND NOTES

DRAWN:	DWG NO.	REV
TJH	08-01133	–
SCALE NTS	DATE 11/09/10	SHEET 6 OF 11

STATE OF TEXAS
LUIS R. LOMAS
101889
LICENSED
PROFESSIONAL ENGINEER

Luis R. Lomas P.E.
Texas No. 101889

REVISIONS			
REV	DESCRIPTION	DATE	APPROVED

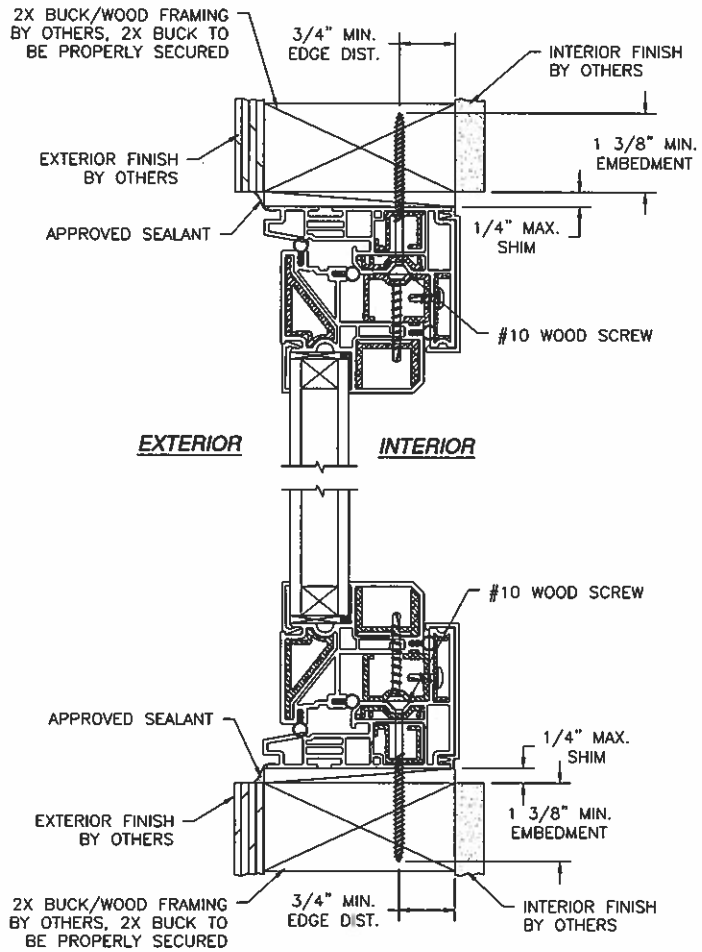

VERTICAL CROSS SECTION
2X BUCK/WOOD FRAMING INSTALLATION
FIXED SHOWN, OPERABLE SIMILAR

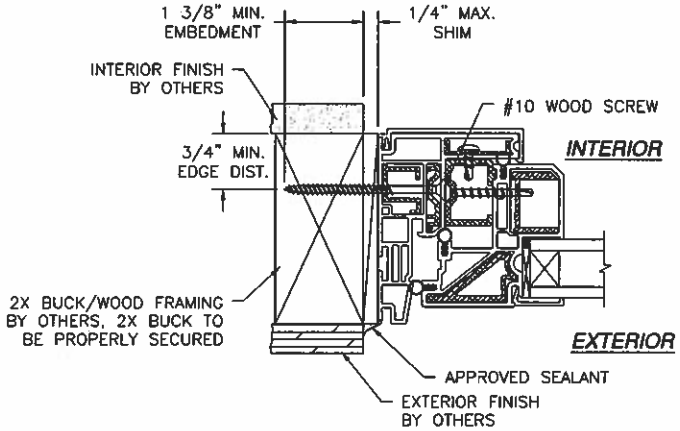

HORIZONTAL CROSS SECTION
2X BUCK/WOOD FRAMING INSTALLATION
FIXED SHOWN, OPERABLE SIMILAR

WinDoor INCORPORATED
7500 AMSTERDAM DRIVE
ORLANDO, FL 32832
Phone: 407.481.8400
Fax: 407.481.2505
www.windoorinc.com

SERIES V-600/V-630 PVC SINGLE AND FIELD MULLED CASEMENT WINDOW - NON-IMPACT INSTALLATION DETAILS

DRAWN:	DWG NO.	REV
TJH	08-01133	–
SCALE NTS	DATE 11/09/10	SHEET 7 OF 11

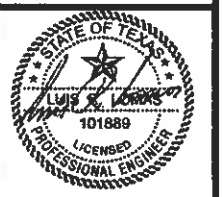

Luis R. Lomas P.E.
Texas No. 101889

REVISIONS			
REV	DESCRIPTION	DATE	APPROVED

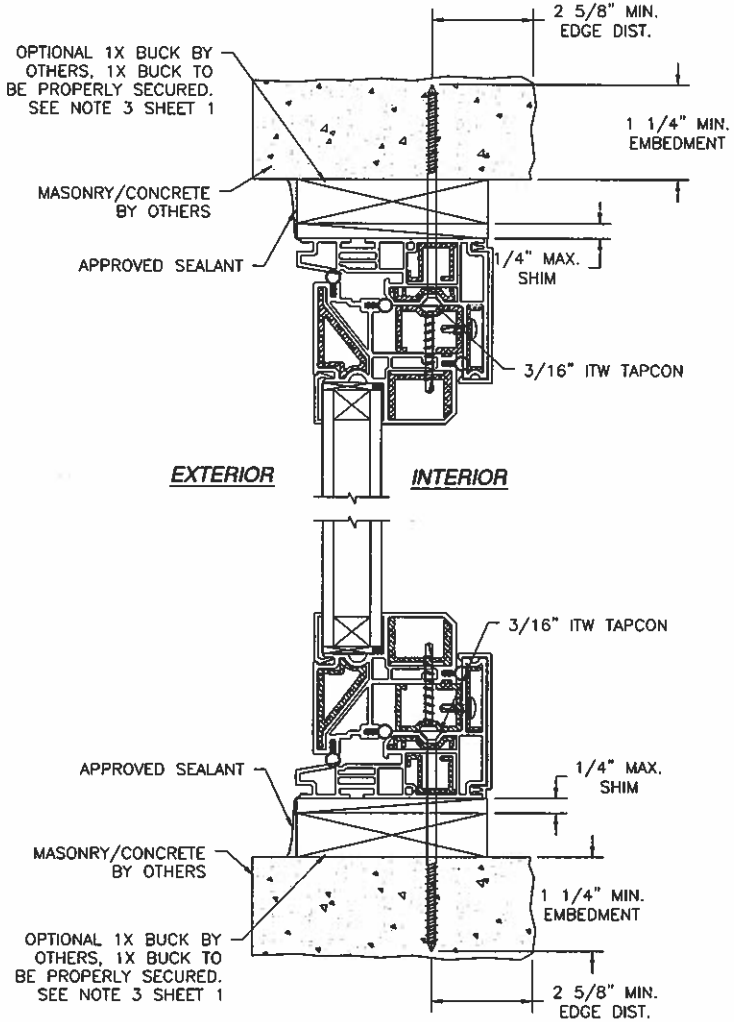

VERTICAL CROSS SECTION
MASONRY/CONCRETE INSTALLATION

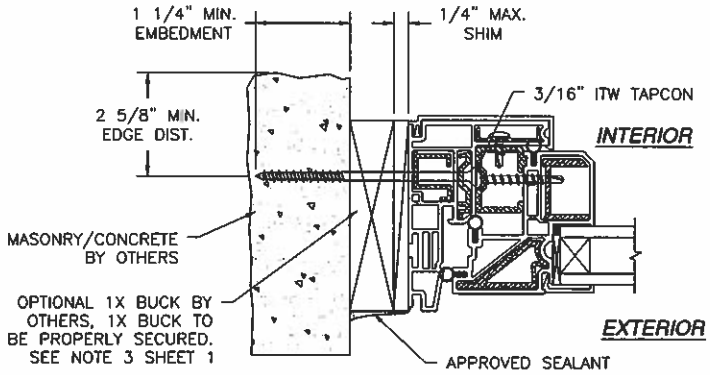

HORIZONTAL CROSS SECTION
MASONRY/CONCRETE INSTALLATION

WinDoor INCORPORATED
7500 AMSTERDAM DRIVE
ORLANDO, FL 32832
Phone: 407.481.8400
Fax: 407.481.0505
www.windoorinc.com

SERIES V-600/V-630 PVC SINGLE AND FIELD MULLED CASEMENT WINDOW - NON-IMPACT INSTALLATION DETAILS

DRAWN:	DWG NO.	REV
TJH	08-01133	-
SCALE NTS	DATE 11/09/10	SHEET 8 OF 11

Luis R. Lomas P.E.
Texas No. 101889

REVISIONS			
REV	DESCRIPTION	DATE	APPROVED

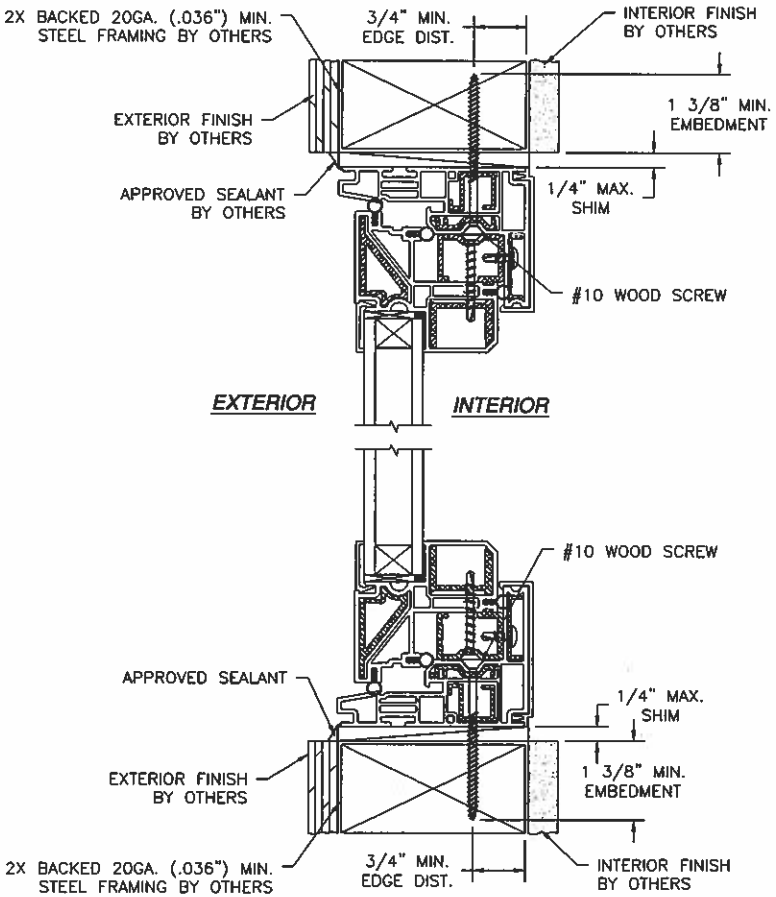

VERTICAL CROSS SECTION
2X BACKED STEEL STUD FRAMING INSTALLATION

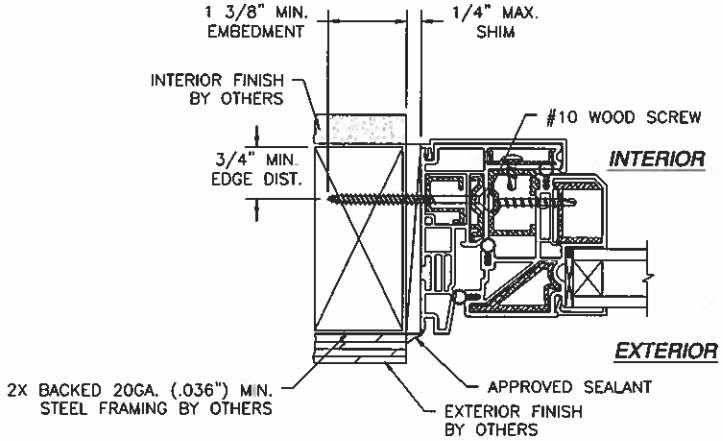

HORIZONTAL CROSS SECTION
2X BACKED STEEL STUD FRAMING INSTALLATION

WinDoor INCORPORATED
7500 AMSTERDAM DRIVE
ORLANDO, FL 32832
Phone: 407.481.8400
Fax: 407.481.0505
www.windoorinc.com

SERIES V-600/V-630 PVC SINGLE AND FIELD MULLED CASEMENT WINDOW - NON-IMPACT INSTALLATION DETAILS

DRAWN:	DWG NO.	REV
TJH	08-01133	–
SCALE NTS	DATE 11/09/10	SHEET 9 OF 11

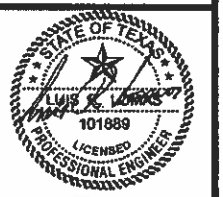

Luis R. Lomas P.E.
Texas No. 101889

REVISIONS			
REV	DESCRIPTION	DATE	APPROVED

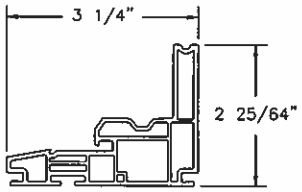

1 FRAME, HEAD, SILL AND JAMB
EXTRUDED RIGID PVC .071" THICK

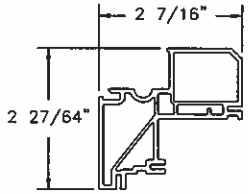

2 PANEL FRAME, STILE AND RAIL
EXTRUDED RIGID PVC .075" THICK

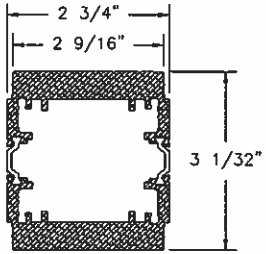

25 FIELD MULL
EXTRUDED ALUMINUM 6063-T6 .470" THICK
WITH (2) ITEM #30

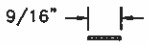

5 FRAME SCREW BACKER
EXTRUDED ALUMINUM 6063-T6 .058" THICK

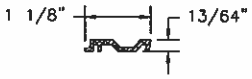

3 FRAME UPPER SCREW RECEIVER
EXTRUDED ALUMINUM 6063-T6 .075" THICK

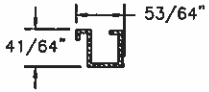

4 FRAME LOWER SCREW RECEIVER
EXTRUDED ALUMINUM 6063-T6 .065" THICK

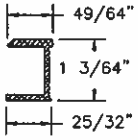

7 VENT INTERIOR SCREW RECEIVER AND REBAR
EXTRUDED ALUMINUM 6063-T6 .075" THICK

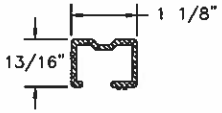

26 FIXED LITE SPACER AND SCREW RECEIVER
EXTRUDED ALUMINUM 6063-T6 .090" THICK

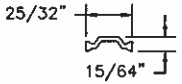

30 20mm THERMAL STRUT
POLYMIDE 66 .071" THICK

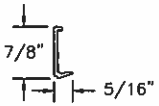

11 1" GLAZING BEAD
EXTRUDED RIGID PVC .039" THICK

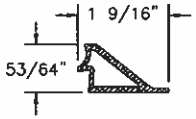

8 VENT EXTERIOR REBAR
EXTRUDED ALUMINUM 6063-T6 .102" THICK

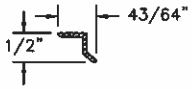

6 TRACK AND SNUBBER SCREW RECEIVER
EXTRUDED ALUMINUM 6063-T6 .070" THICK

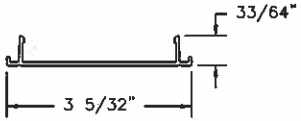

33 FIELD MULL COVER
EXTRUDED RIGID PVC .065" THICK

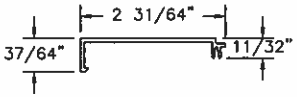

28 FIXED VENT SCREW COVER
EXTRUDED RIGID PVC .065" THICK

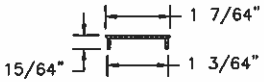

35 FIXED VENT ATTACHMENT SCREW BACKUP
EXTRUDED ALUMINUM 6063-T6 .050" THICK

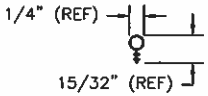

15 KERF APTUS VENT BULB SEAL
PLASTIC

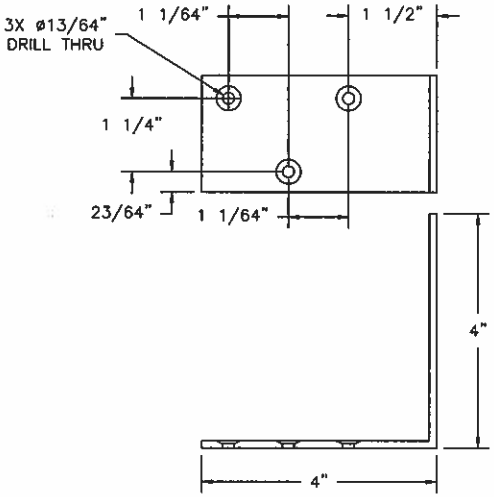

21 MULL ANCHOR CLIP
EXTRUDED ALUMINUM 6063-T6 .125" THICK

WinDoor INCORPORATED
7500 AMSTERDAM DRIVE
ORLANDO, FL 32832
Phone: 407.481.8400
Fax: 407.481.0505
www.windoorinc.com

SERIES V-600/V-630 PVC SINGLE AND FIELD MULLED CASEMENT WINDOW - NON-IMPACT COMPONENTS

DRAWN:	DWG NO.	REV
TJH	08-01133	–
SCALE NTS	DATE 11/09/10	SHEET 10 OF 11

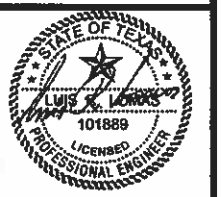

Luis R. Lomas P.E.
Texas No. 101889

REVISIONS			
REV	DESCRIPTION	DATE	APPROVED

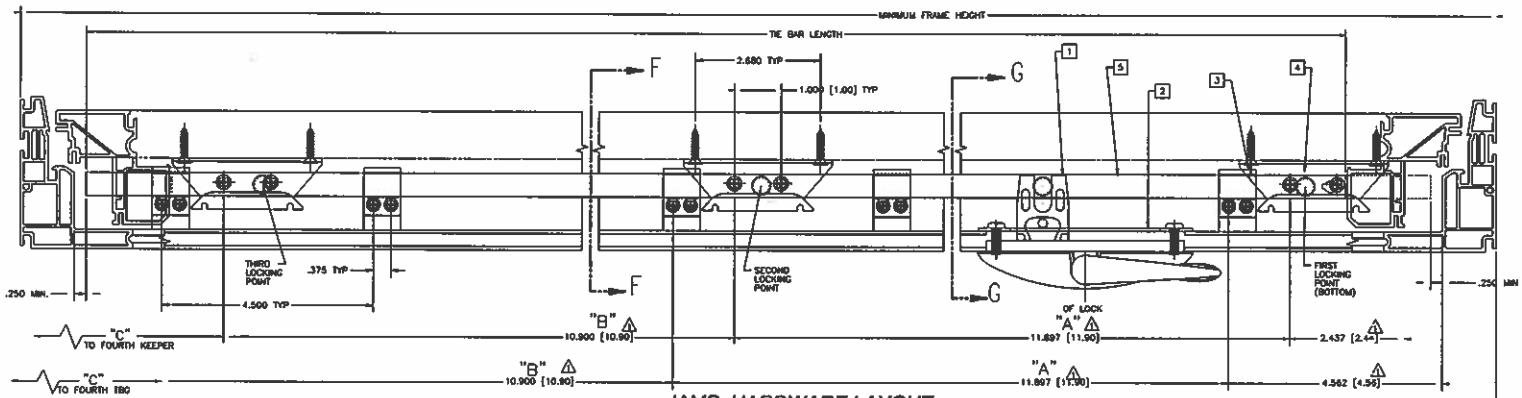

JAMB HARDWARE LAYOUT

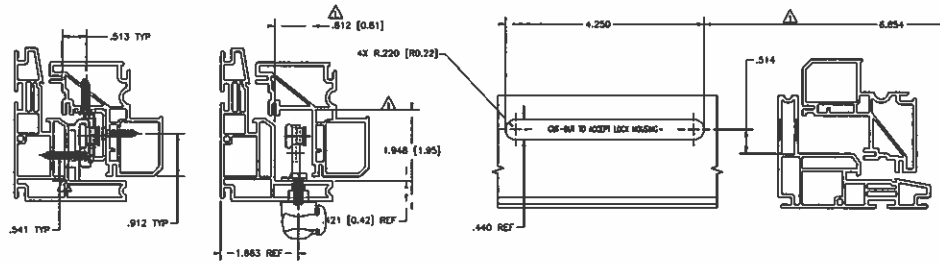

75.52"	13098.92	6 PT.	70.9	13.89	14.13	13.00	13.00	13.00	
75.52"	12927.92	4 PT.		23.90	22.90	20.00			
71.52"	13097.92	5 PT.	66.9	15.90	15.90	15.90	18.13		
71.52"	12926.92	4 PT.		21.90	20.90	20.00			
67.52"	13096.92	5 PT.	62.9	11.90	15.90	14.90	16.00		
67.52"	12925.92	4 PT.		19.90	16.90	20.00			
63.52"	13095.92	3 PT.	58.9	17.89	17.08	19.75			
	11922.92	3 PT.		27.90	26.90				
	11912.92	2 PT.		54.80					
59.52"	13094.92	3 PT.	54.9	15.89	18.06	18.75			
	11921.92	3 PT.		29.90	24.90				
	11911.92	2 PT.		50.80					
55.52"	13093.92	4 PT.	50.9	13.89	18.06	18.75			
	11920.92	3 PT.		23.90	22.90				
	11910.92	2 PT.		46.80					
51.52"	11919.92	3 PT.	46.9	21.90	20.90				
	11909.92	2 PT.		42.80					
47.52"	11918.92	3 PT.	42.9	19.90	18.90				
	11908.92	2 PT.		36.80					
43.52"	11917.92	3 PT.	38.9	17.90	18.90				
	11907.92	2 PT.		34.80					
39.52"	11916.92	3 PT.	34.9	15.90	14.90				
	11906.92	2 PT.		30.80					
35.52"	11915.92	3 PT.	30.9	13.90	12.90				
	11905.92	2 PT.		26.80					
31.52"	11914.92	3 PT.	26.9	11.90	10.90				
	11904.92	2 PT.		22.80					
27.52"	11903.92	2 PT.	22.9	18.80					
23.52"	11902.92	2 PT.	18.9	14.80					
19.52"	11901.92	2 PT.	14.9	10.80					
MINIMUM FRAME WIDTH	PART NO.	# OF LOCK POINTS	TIE BAR LENGTH	"A" DIM △1	"B" DIM △1	"C" DIM △1	"D" DIM △1	"E" DIM △1	

INTERLOCK ROLLER TIE BAR ASSEMBLY

ITEM	PART NO.	2 PT.	3 PT.	4 PT.	DESCRIPTION
		QTY			
–	19225	6	9	12	SCREW 8X3/4 PH FH SMS SS410 (KEEPER)
–	19230.92	4	6	8	SCREW 8X1 PH PH SMS YZP (TBG)
–	19298.92	2	2	2	SCREW 10-24X9/16 F PH PH MS YZ(LOCK)
5	SEE CHART	1	1	1	TIE BAR ASSEMBLY
4	32832.00.0500	2	3	4	KEEPER, NON-HANDED SST
3	33263.00.0001	2	3	4	TIE BAR GUIDE
2	21800.92	1	1	1	SUPPORT PLATE
1	24.33.XX.004	1	1	1	LOCK ASSEMBLY

NOTES:

1. △1 ACCURACY OF INDICATED DIMENSIONS IS CRITICAL TO THE FUNCTION OF THE MULTI-POINT LOCK.
2. "C" DIMENSION FOR THE FOURTH LOCKING POINT. FOR KEEPER AND TIE BAR GUIDE PLACEMENT. DIMENSION "C" ORIGINATES AT THE THIRD LOCKING POINT.
3. "A" AND "B" DIMENSIONS ARE CONFIGURED TO GIVE SEQUENTIAL AND PROGRESSIVE LOCKING OF 1/2" TOTAL, STARTING WITH THE FIRST(BOTTOM)LOCKING POINT, WITH A PROGRESSION OF 1/4" FROM THE FIRST LOCKING POINT TO THE SECOND LOCKING POINT, AND A 1/4" FROM THE SECOND LOCKING POINT TO THE THIRD LOCKING POINT. THE FOURTH LOCKING POINT MOVES IN TANDEM WITH THE THIRD LOCKING POINT.
4. TIE BAR TRAVEL IS 1.82"
5. ALL DIMENSIONS ARE AFTER WELD.
6. MOUNTING SCREWS FOR ALL HARDWARE SHOULD PASS THROUGH TWO PVC WALLS OR A SINGLE WALL WITH AN INTERIOR METAL INSERT.
7. SEE TRUTH HARDWARE CATALOG FOR FURTHER INFO ON APPLICATION OF ALL COMPONENTS.

WinDoor INCORPORATED
7500 AMSTERDAM DRIVE
ORLANDO, FL 32832
Phone: 407.481.8400
Fax: 407.481.0505
www.windoorinc.com

SERIES V-600/V-630 PVC SINGLE AND FIELD MULLED CASEMENT WINDOW – NON-IMPACT HARDWARE LAYOUT

DRAWN:	DWG NO.	REV
TJH	08-01133	–
SCALE NTS	DATE 11/09/10	SHEET 11 OF 11

STATE OF TEXAS
LUIS R. LOMAS
101889
LICENSED
PROFESSIONAL ENGINEER

Luis R. Lomas P.E.
Texas No. 101889