GENERAL NOTES: VALID FOR SHUTTERS WITHOUT STORM BARS AND HEADERS: SHEETS 1 THRU 19

1. ROLL-UP SHUTTER SHOWN ON THIS PRODUCT EVALUATION DOCUMENT (P.E.D.) HAS BEEN VERIFIED FOR COMPLIANCE IN ACCORDANCE WITH THE 2006 EDITIONS OF THE INTERNATIONAL BUILDING CODE (I.B.C.) AND INTERNATIONAL RESIDENTIAL CODE, (I.R.C.) WITH THE 2006 TEXAS REVISIONS EFFECTIVE JANUARY 1, 2008.

   THIS PRODUCT SHALL BE INSTALLED AT SEAWARD AND INLAND AREAS, AS DEFINED BY THE TEXAS DEPARTMENT OF INSURANCE. DESIGN WIND LOADS SHALL BE DETERMINED AS PER SECTION 1609 OF THE OF THE INTERNATIONAL BUILDING CODE, FOR A BASIC WIND SPEED AS REQUIRED BY THE JURISDICTION WHERE SHUTTER WILL BE INSTALLED, AND FOR A DIRECTIONALITY FACTOR Kd=0.85, IN ACCORDANCE W/ ASCE 7-05 STANDARD IN ORDER TO VERIFY THAT COMPONENTS AND ANCHORS ON THIS P.E.D. AS TESTED WERE NOT OVER STRESSED, A 33% INCREASE IN ALLOWABLE STRESS FOR WIND LOADS WAS NOT USED IN THEIR ANALYSIS. FASTENERS SPACING TO WOOD HAS BEEN DETERMINED IN ACCORDANCE WITH N.D.S. 2005.

   ROLL-UP SHUTTER'S ADEQUACY FOR IMPACT AND CYCLIC RESISTANCE HAS BEEN VERIFIED IN ACCORDANCE WITH SECTION 1609.1.2 & R301.1.3 OF THE ABOVE MENTIONED CODES AS PER FENESTRATION TESTING LAB. REPORT # 8944 AS PER FLORIDA PROTOCOLS TAS 201, 202 & 203, QUALIFYING IMPACT RESISTANCE FOR 9lb, 2x4 LARGE MISSILE AT 80ft/sec, AND ALSO QUALIFYING INSTALLATIONS FOR WIND ZONES 1, 2, 3 & 4, MISSILE TYPE E, APPLICABLE TO ENHANCED PROTECTION, INSTALLATIONS AT ESSENTIAL FACILITIES AS DEFINED BY SECTIONS 6.2.1.1, 6.2.1.2 AND 8.3 OF ASTM E 1996 SEE *, △ NOTES ON SHEETS 10 & 18 FOR ADDITIONAL LIMITATIONS, AND AS PER STRUCTURAL CALCULATION PERFORMED IN ACCORDANCE W/ SECTION 1604 OF THE INTERNATIONAL BUILDING CODE.

2. ALL ALUMINUM EXTRUSIONS SHALL BE AS INDICATED ON SHEET 2.

3. EVERY OTHER SLAT SHALL INCLUDE WIND LOCKS AT EACH END (SEE COMPONENTS SHEET). EVERY SLAT (A) ADJACENT AND ABOVE BOTTOM SLAT (A1) MUST INCLUDE WIND LOCKS.

4. ALL SCREWS & BOLTS (EXCEPT COMPONENT (C3))INSTALLED AT SEAWARD AREAS TO BE STAINLESS STEEL 304 OR 316 AISI SERIES AND MEET ASTM A167, OR HOT DIPPED GALVANIZED (AFTER FABRICATION) CARBON STEEL AS PER ASTM A123 OR ASTM A153, OR HOT DIPPED GALVANIZED OR GALVANNEALED (PRIOR TO FABRICATION) AND MEET ASTM A653 WITH 50 KSI YIELD STRENGTH AND 90 KSI TENSILE STRENGTH, PER 2006 TEXAS REVISIONS TO THE 2006 I.B.C. AND THE 2006 I.R.C.

5. ALL SCREWS & BOLTS (EXCEPT COMPONENT (C3)) INSTALLED AT INLAND I AREAS TO BE STAINLESS STEEL 304 OR 316 AISI SERIES AND MEET ASTM A167, OR HOT DIPPED GALVANIZED (AFTER FABRICATION) CARBON STEEL AS PER ASTM A123 OR ASTM A153, OR HOT DIPPED GALVANIZED OR GALVANNEALED (PRIOR TO FABRICATION) AND MEET ASTM A653; HOT DIP GALVANIZED OR ELECTRO GALVANIZED PER ASTM A641, MECHANICALLY DEPOSITED ZINC COATINGS PER ASTM B695 OR ELECTRO DEPOSITED ZINC COATINGS PER ASTM B633, PER THE 2006 TEXAS REVISIONS TO THE 2006 I.B.C. AND TO THE 2006 I.R.C.

6. ANCHORS TO WALL FOR (B1) SIDE RAIL SHALL BE AS FOLLOWS: (UNLESS OTHERWISE NOTED)

   (A) TO EXISTING POURED CONCRETE: MIN. f'c = 2899 p.s.i. COMPRESSIVE STRENGTH.

   -5/16"ø CARBON STEEL TAPCON XL ANCHORS AS MANUFACTURED BY ITW BUILDEX, INC.

   A.1) MINIMUM EMBEDMENT OF 5/16" TAPCON XL ANCHORS INTO POURED CONCRETE SHALL BE 2 1/4". NO EMBEDMENT INTO STUCCO SHALL BE CONSIDERED AS PART OF THE REQUIRED EMBEDMENT.

   A.2) MINIMUM EDGE DISTANCE (E.D.) OF TAPCON XL ANCHORS INTO POURED CONCRETE SHALL BE 4". EDGE DISTANCE IS BEYOND ANY FINISH MATERIAL.

   A.3) IN CASE THAT PRECAST STONE, PRECAST CONCRETE OR BRICK PANELS, VENEER OR PAVERS BE FOUND ON THE EXISTING WALL, ANCHORS SHALL BE LONG ENOUGH TO REACH THE MAIN SUBSTRATE BEHIND SUCH PANELS. MINIMUM EMBEDMENT SHALL BE AS INDICATED ON NOTE A.1 ABOVE.

   (B) TO EXISTING GROUT FILLED CELL, CONCRETE BLOCK WALL: ASTM C-90

   -5/16"ø CARBON STEEL TAPCON XL ANCHORS, AS MANUFACTURED BY ITW BUILDEX, INC.

   B.1) MINIMUM EMBEDMENT OF 5/16" TAPCON XL ANCHORS, INTO GROUT FILLED CELL CONCRETE BLOCK UNIT SHALL BE 2 1/4". NO EMBEDMENT INTO STUCCO SHALL BE CONSIDERED AS PART OF THE REQUIRED EMBEDMENT.

   B.2) MINIMUM EDGE DISTANCE (E.D.) OF 5/16" TAPCON XL ANCHORS INTO GROUT FILLED CELL CONCRETE BLOCK SHALL BE 4". EDGE DISTANCE IS BEYOND ANY FINISH MATERIAL.

   B.3) IN CASE THAT PRECAST STONE, PRECAST CONCRETE OR BRICK PANELS, VENEER OR PAVERS BE FOUND ON THE EXISTING WALL, ANCHORS SHALL BE LONG ENOUGH TO REACH THE MAIN SUBSTRATE BEHIND SUCH PANELS. MINIMUM EMBEDMENT SHALL BE AS INDICATED ON NOTE B.1 ABOVE.

   (C) TO EXISTING WOOD FRAME BUILDING: SOUTHERN PINE #2 W/ G = 0.55 MIN., DOUGLAS FIR-SOUTH (G=0.46) OR SPRUCE PINE-FIR SOUTH, (G=0.36).

   -5/16"ø CARBON STEEL ULTRACON ANCHORS, AS MANUFACTURED BY ELCO CONSTRUCTION PRODUCTS, INC.

   C.1) MINIMUM PENETRATION OF ULTRACON ANCHORS, INTO THE WOOD FRAME UNIT SHALL BE 2 1/2". (MUST INCLUDE 2" THREADED LENGTH) NO PENETRATION INTO STUCCO SHALL BE CONSIDERED AS PART OF THE REQUIRED PENETRATION.

   C.2) MINIMUM EDGE DISTANCE (E.D.) OF ULTRACON ANCHORS, INTO WOOD SHALL BE 2". EDGE DISTANCE IS BEYOND ANY FINISH MATERIAL.

   C.3) IN CASE THAT PRECAST STONE, PRECAST CONCRETE OR BRICK PANELS, VENEER OR PAVERS BE FOUND ON THE EXISTING WALL, ANCHORS SHALL BE LONG ENOUGH TO REACH THE MAIN SUBSTRATE BEHIND SUCH PANELS. MINIMUM THREADED PENETRATION SHALL BE AS INDICATED ON NOTE C.1 ABOVE.

7. ANCHORS SHALL BE INSTALLED FOLLOWING ALL OF THE RECOMMENDATIONS AND SPECIFICATIONS OF THE ANCHOR'S MANUFACTURER.

8. ANCHORS REQUIRED FOR MULLION CONNECTIONS SHALL BE AS SPECIFIED ON APPLICABLE SECTIONS SHOWN ON SHEETS 16 & 17 RESPECTIVELY.

   -1/2"ø & 5/8"ø KWIK BOLT TZ EXPANSION ANCHOR TO BE AS MANUFACTURED BY HILTI, INC.

   MINIMUM EDGE DISTANCE AND SPACING FOR ABOVE MENTIONED ANCHORS SHALL BE AS INDICATED BELOW OR AT ABOVE MENTIONED SHEET. EDGE DISTANCE AND EMBEDMENTS ARE BEYOND ANY FINISH MATERIAL.

ANCHOR	SPACING @ 100%	EDGE DISTANCE @ 100%	EMBEDMENT CONCRETE	EMBEDMENT GROUT FILLED OR CONCRETE BLOCK
1/2"	22 1/2"	7 1/2"	4" (3000 psi)	-
5/8"	20 1/4"	6 3/4"	6 3/4" (3000 psi)	-

9. ROLL-UP SHUTTER SLATS FOAM PLASTIC CORE SHALL CONSIST OF HIGH DENSITY ELASTOLID D 8220/109 POLYOLKOMPONENT 0.021676 Lb/in³ FOAM PLASTIC CORE.
   SLATS FOAM PLASTIC CORE SURFACE BURNING CHARACTERISTICS HAVE BEEN VERIFIED IN ACCORDANCE WITH SECTION 2603.3 OF THE INTERNATIONAL BUILDING CODE AS PER INTERTEK TEST REPORTS # 102553198SAT-001A REV1 & 102484409MID_001 RESPECTIVELY.

10. THE INSTALLATION CONTRACTOR IS TO SEAL/CAULK ALL SHUTTER COMPONENT EDGES WHICH REMAIN IN CONTINUOUS CONTACT WITH THE BUILDING TO PREVENT WIND/RAIN INTRUSION. CAULK AND SEAL SHUTTER TRACKS ALL AROUND FULL LENGTH.

11. IT SHALL BE THE RESPONSIBILITY OF THE CONTRACTOR TO VERIFY THE SOUNDNESS OF THE STRUCTURE WHERE SHUTTER IS TO BE ATTACHED TO INSURE PROPER ANCHORAGE. THIS SHUTTER SHALL ONLY BE ATTACHED TO CONCRETE, GROUT FILLED CELL CONCRETE BLOCK OR WOOD FRAME BUILDINGS.

12. ROLL-UP SHUTTERS INSTALLATION SHALL COMPLY WITH SPECS INDICATED IN THIS DRAWING PLUS ANY BUILDING AND ZONING REGULATIONS PROVIDED BY THE JURISDICTION WHERE PERMIT IS APPLIED TO.

13. ROLL-UP MECHANISM NOT PART OF THIS APPROVAL.

14. (a) THIS P.E.D. PREPARED BY THIS ENGINEER IS GENERIC AND DOES NOT PROVIDE INFORMATION FOR A SITE SPECIFIC PROJECT; i.e. WHERE THE SITE CONDITIONS DEVIATE FROM THE P.E.D.

    (b) CONTRACTOR TO BE RESPONSIBLE FOR THE SELECTION, PURCHASE AND INSTALLATION INCLUDING LIFE SAFETY OF THIS PRODUCT, BASED ON THIS P.E.D. PROVIDED HE/SHE DOES NOT DEVIATE FROM THE CONDITIONS DETAILED ON THIS DOCUMENT. CONSTRUCTION SAFETY AT SITE IS THE CONTRACTOR'S RESPONSIBILITY.

    (c) THIS P.E.D. WILL BE CONSIDERED INVALID IF ALTERED BY ANY MEANS.

    (d) SITE SPECIFIC PROJECTS SHALL BE PREPARED BY A PROFESSIONAL REGISTERED ENGINEER OR ARCHITECT WHICH WILL BECOME THE ENGINEER OF RECORD (E.O.R.) FOR THE PROJECT AND WHO WILL BE RESPONSIBLE FOR THE PROPER USE OF THE P.E.D. ENGINEER OF RECORD, ACTING AS A DELEGATED ENGINEER TO THE P.E.D. ENGINEER, SHALL SUBMIT TO THIS LATTER THE SITE SPECIFIC DRAWINGS FOR REVIEW.

    (e) THIS P.E.D. SHALL BEAR THE DATE AND ORIGINAL SEAL AND SIGNATURE OF THE PROFESSIONAL ENGINEER OF RECORD THAT PREPARED IT.

15. PRODUCT MANUFACTURE'S LABEL SHALL BE LOCATED ON A READILY VISIBLE LOCATION AT PRODUCT IN ACCORDANCE WITH TEXAS DEPARTMENT OF INSURANCE REQUIREMENTS. ONE LABEL SHALL BE PLACED FOR EVERY OPENING.

THIS DRAWING SHALL ONLY BE USED TO OBTAIN PERMITS UNDER THE TEXAS DEPARTMENT OF INSURANCE JURISDICTION

STATE OF TEXAS
WALTER A. TILLIT, JR.
80691
PROFESSIONAL ENGINEER
11/06/17

P.E. SEAL/SIGNATURE/DATE

WALTER A. TILLIT Jr. P.E.
PROFESSIONAL ENGINEER
6355 N.W. 36TH ST., STE. 305
VIRGINIA GARDENS, FL. 33166
PHONE : (305) 871-1530 , FAX : (305) 871-1531
TEXAS LIC. # 90691
FIRM REGISTRATION # F-13790

TEXAS DEPARTMENT OF INSURANCE - 2006

heroal RS 53 RC 3 SLAT ENGAGED ROLL-UP SHUTTER

heroal-Johann Henkenjohann GmbH & Co. KG
Osterwieher Str. 80
33415 Verl.

REV. NO	DESCRIPTION	DATE	REV. No	DESCRIPTION	DATE
1			3		
2			4		

DRAWN BY: L.C.
DATE: 11/06/17
DRAWING No. 17-287
SHEET 1 OF 27

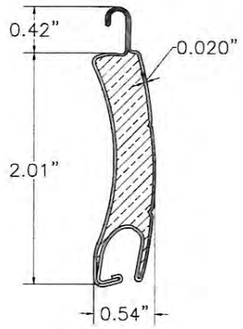

(A) SLAT:
heroal RS 53 RC 3 SLAT
53mm (t = .020")
HIGH DENSITY ELASTOLID D 8220/109
POLYOLKOMPONENTE
0.021676 Lb/in³
FOAM PLASTIC CORE
SHEET METAL S.S SLAT
AISI 304 SERIES S.S (Fy=60.0 Ksi.)
(Fu=78.0 Ksi.)
SCALE: 3/4" = 1"

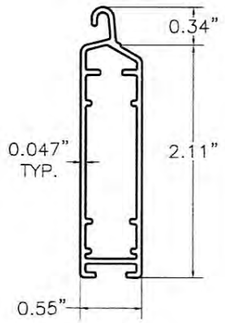

(A1) BOTTOM SLAT:
6060-T66 ALUMINUM ALLOY
SCALE: 3/4" = 1"

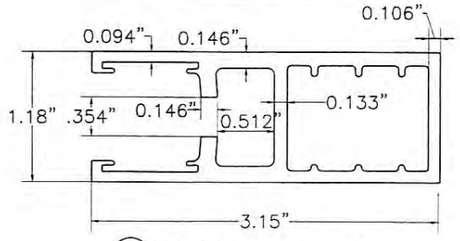

(B1) TYPE 2 SIDE RAIL:
6060-T66 ALUMINUM ALLOY
SCALE: 3/4" = 1"

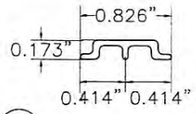

(F) SIDE RAIL INLAY
PC/ABS T85 POLYCARBONATE

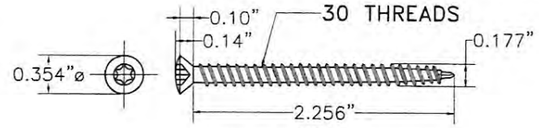

(C3) WIND LOCK SCREW:
(2) 2 3/8" 305 SERIES F.H. S.D.S.
(Min. Fy = 72.8 ksi, Min. Ftu = 83.1 ksi)
SCALE: 3/4" = 1"

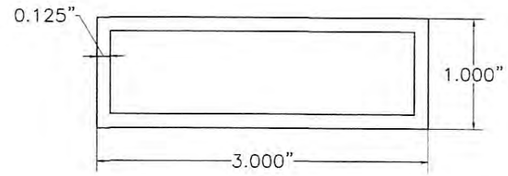

(E) ALUMINUM TUBE
6063-T6 ALUMINUM ALLOY

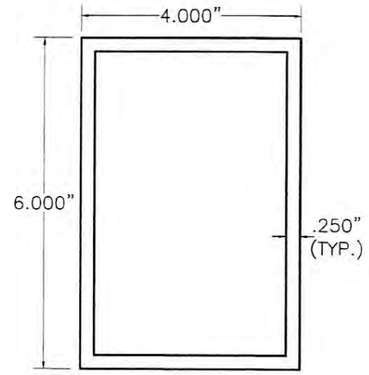

(G) TYPE 1 MULLION
6061-T6 ALUMINUM ALLOY
SCALE: 3/8" = 1"

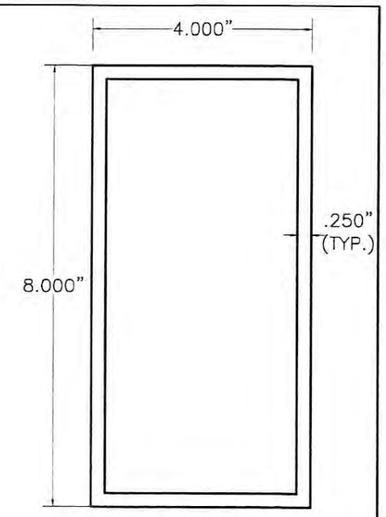

(I) TYPE 2 MULLION
6061-T6 ALUMINUM ALLOY
SCALE: 3/8" = 1"

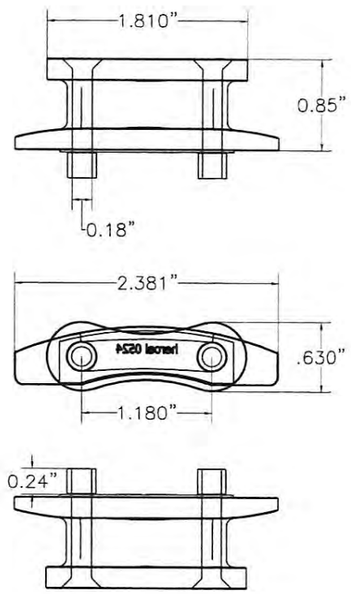

(C1) WIND LOCK:
DURETHAN BC 40 SR2
SCALE: 3/4" = 1"

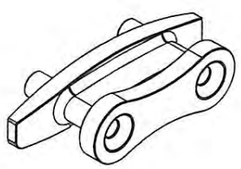

ISOMETRIC (C1)

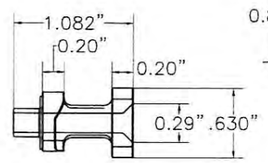

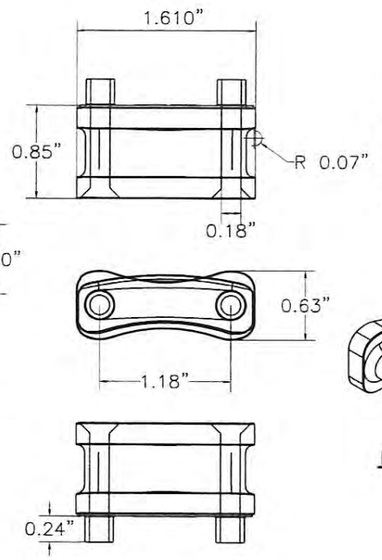

(C2) WIND LOCK:
DURETHAN BC 40 SR2
SCALE: 3/4" = 1"

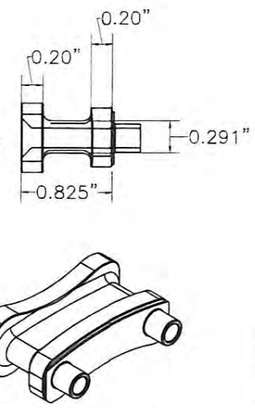

ISOMETRIC (C2)

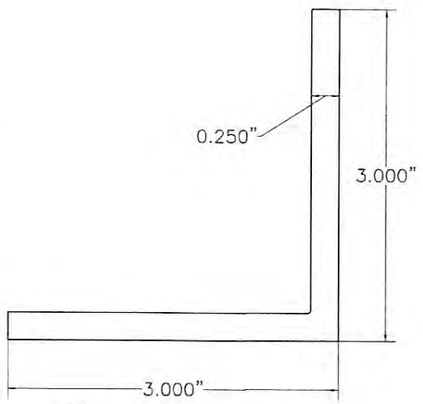

(D) ALUMINUM ANGLE
6063-T6 ALUMINUM ALLOY

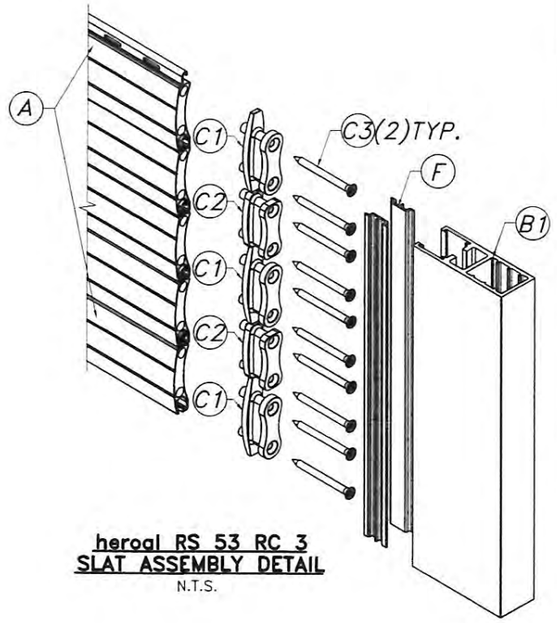

heroal RS 53 RC 3
SLAT ASSEMBLY DETAIL
N.T.S.

COMPONENTS
(VALID ONLY FOR SHUTTERS
WITHOUT STORM BARS & HEADERS)

STATE OF TEXAS
WALTER A. TILLIT, JR.
90691
LICENSED
PROFESSIONAL ENGINEER
P.E. SEAL/SIGNATURE/DATE

WALTER A. TILLIT Jr. P.E.
PROFESSIONAL ENGINEER
6355 N.W. 36TH. ST., STE. 305
VIRGINA GARDENS, FL. 33166
PHONE : (305) 871-1530 , FAX : (305) 871-1531
TEXAS LIC. # 90691
FIRM REGISTRATION # F-13790

TEXAS DEPARTMENT OF INSURANCE – 2006

heroal RS 53 RC 3 SLAT
ENGAGED ROLL-UP SHUTTER

heroal-Johann Henkenjohann GmbH & Co. KG
Osterwieher Str. 80
33415 Verl.

REV. NO	DESCRIPTION	DATE	REV. No	DESCRIPTION	DATE
1			3		
2			4		

DRAWN BY: L.C.
DATE: 11/06/17
DRAWING No. 17-287
SHEET 2 OF 27

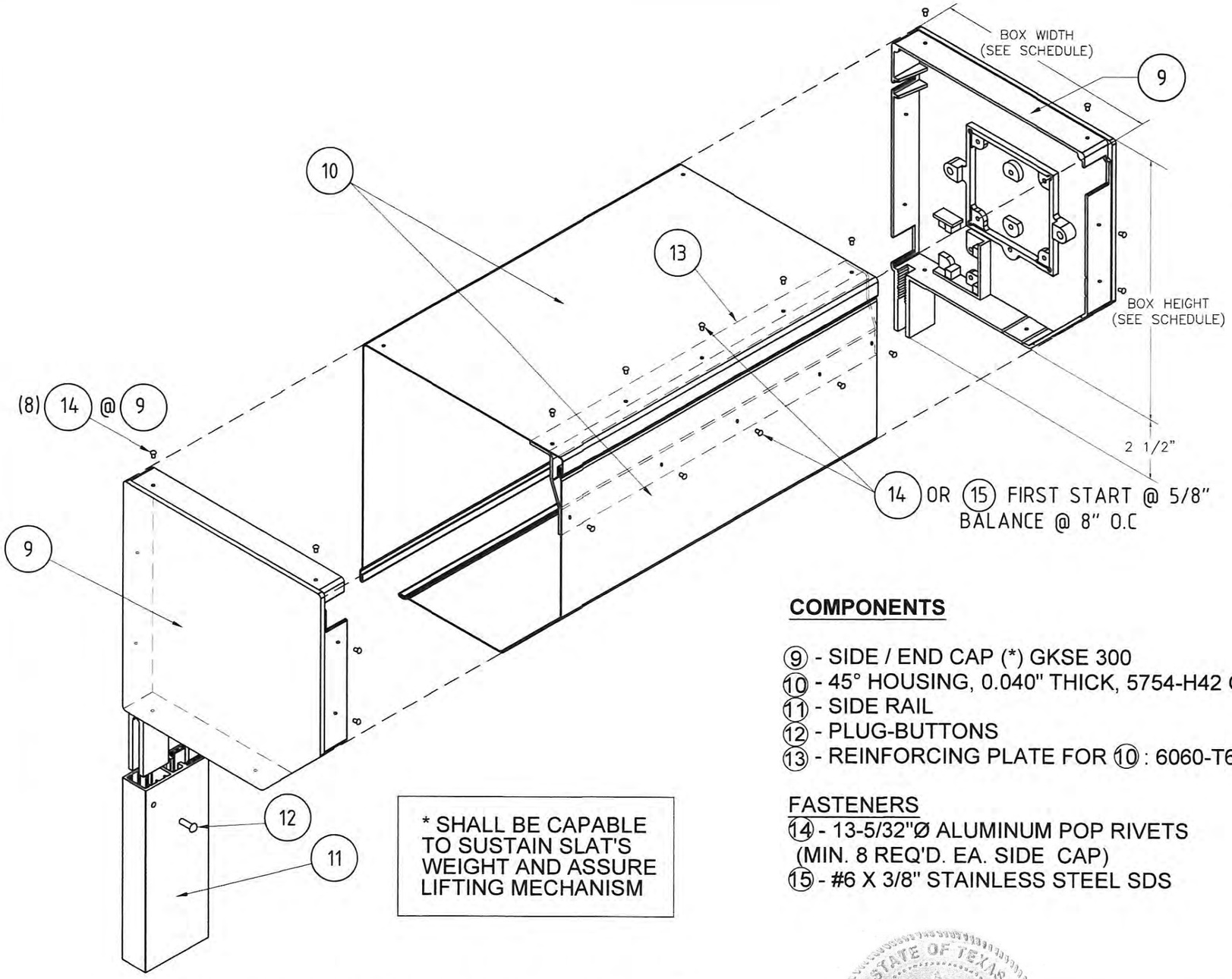

* SHALL BE CAPABLE TO SUSTAIN SLAT'S WEIGHT AND ASSURE LIFTING MECHANISM

Ⓗ BOX ASSEMBLY DETAIL W/ END CAP SYSTEM ⑨
N.T.S

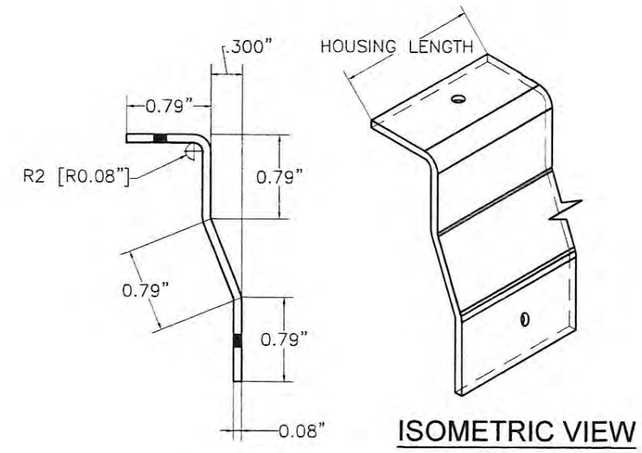

⑬ REINFORCING PLATE
N.T.S

COMPONENTS

⑨ - SIDE / END CAP (*) GKSE 300
⑩ - 45° HOUSING, 0.040" THICK, 5754-H42 OR EQUAL
⑪ - SIDE RAIL
⑫ - PLUG-BUTTONS
⑬ - REINFORCING PLATE FOR ⑩ : 6060-T66 ALLOY

FASTENERS
⑭ - 13-5/32"Ø ALUMINUM POP RIVETS
(MIN. 8 REQ'D. EA. SIDE CAP)
⑮ - #6 X 3/8" STAINLESS STEEL SDS

BOX SCHEDULE

GKSE BOX	BOX WIDTH (in)	BOX HEIGHT (in)
205	8.1	8.1
230	9.1	9.1
254	9.9	9.9
300	12	12

COMPONENTS (CONT'D)

(VALID FOR SHUTTERS WITH OR WITHOUT STORM BARS & HEADERS)

STATE OF TEXAS
WALTER A. TILLIT, JR.
90691
LICENSED
PROFESSIONAL ENGINEER
P.E. SEAL/SIGNATURE/DATE

WALTER A. TILLIT Jr. P.E.
PROFESSIONAL ENGINEER
6355 N.W. 36TH. ST., STE. 305
VIRGINIA GARDENS, FL. 33166
PHONE : (305) 871-1530 , FAX : (305) 871-1531
TEXAS LIC. # 90691
FIRM REGISTRATION # F-13790

TEXAS DEPARTMENT OF INSURANCE – 2006

heroal RS 53 RC 3 SLAT
ENGAGED ROLL-UP SHUTTER

heroal-Johann Henkenjohann GmbH & Co. KG
Osterwieher Str. 80
33415 Verl.

REV. NO	DESCRIPTION	DATE	REV. No	DESCRIPTION	DATE
1			3		
2			4		

DRAWN BY: L.C.
DATE: 11/06/17
DRAWING No. 17-287
SHEET 3 OF 27

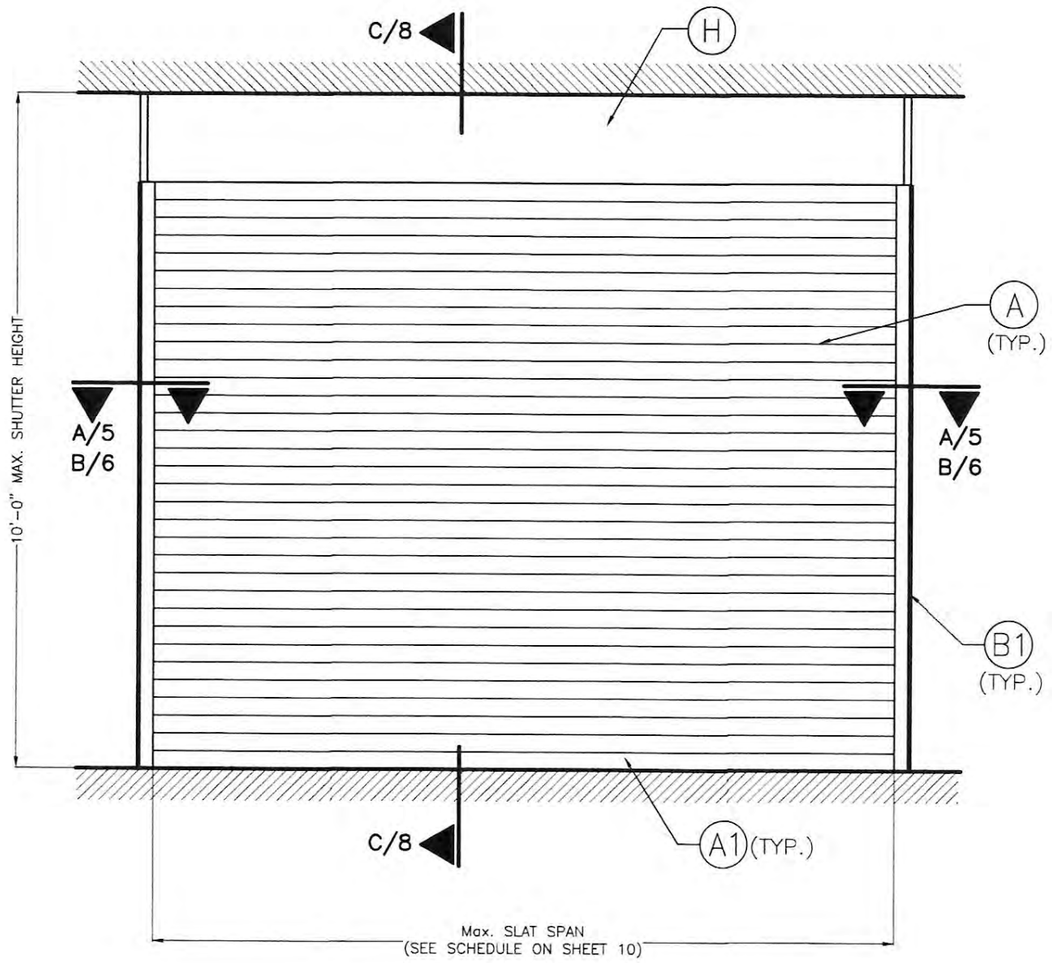

TYPICAL ELEVATION: INSTALLATION INTO POURED CONCRETE, GROUT FILLED CELL, CONCRETE BLOCK & WOOD

NOTES: SEE SHEETS 2 & 3 FOR COMPONENTS NOMENCLATURE.
N.T.S

(VALID ONLY FOR SHUTTERS WITHOUT STORM BARS & HEADERS)

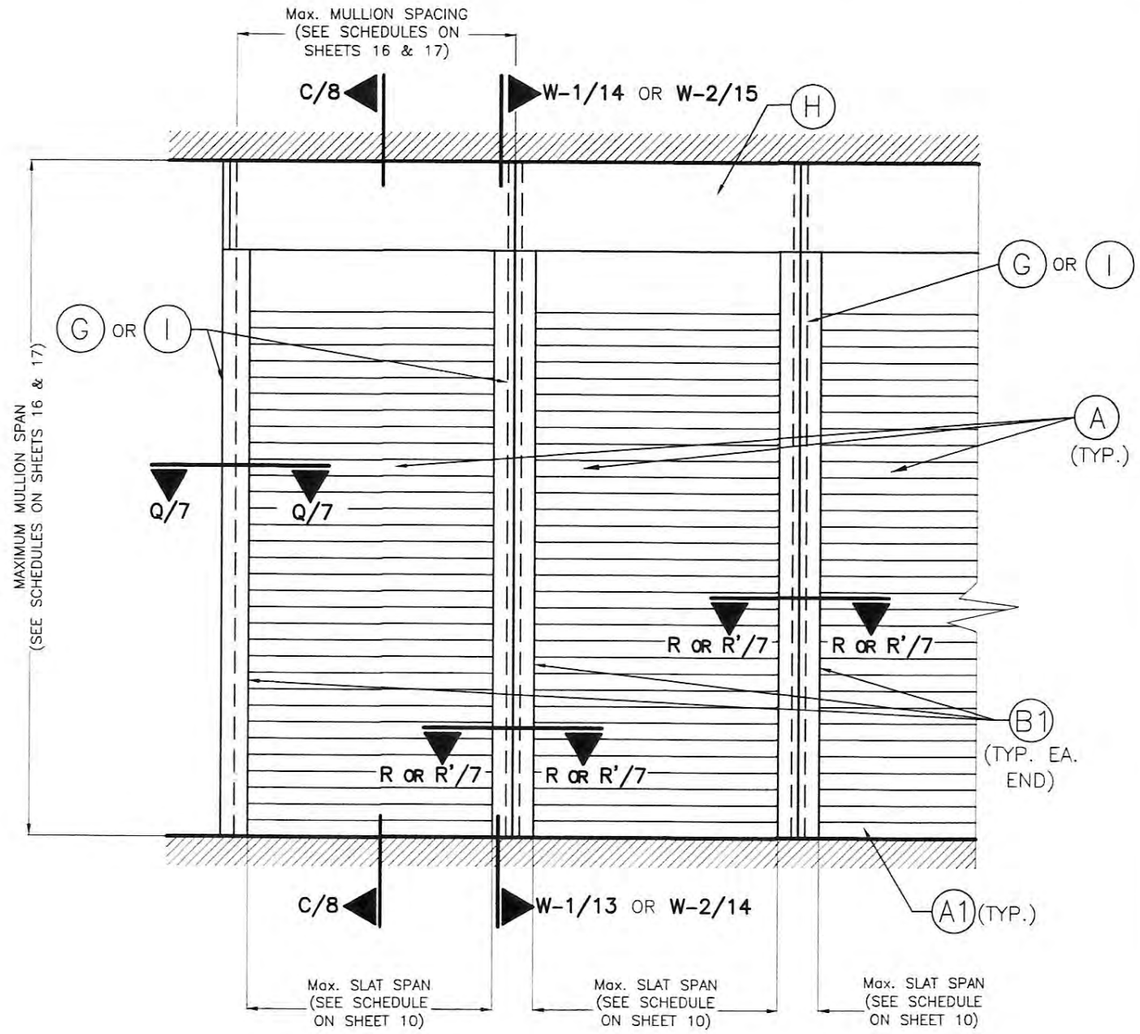

TYPICAL CONSECUTIVE SINGLE UNIT ELEVATION W/ MULLIONS: INSTALLATION INTO POURED CONCRETE

NOTES: SEE SHEETS 2 & 3 FOR COMPONENTS NOMENCLATURE.
N.T.S

(VALID ONLY FOR SHUTTERS WITHOUT STORM BARS & HEADERS)

TEXAS DEPARTMENT OF INSURANCE – 2006

STATE OF TEXAS
WALTER A. TILLIT, JR.
LICENSED
PROFESSIONAL ENGINEER

P.E. SEAL/SIGNATURE/DATE

WALTER A. TILLIT Jr. P.E.
PROFESSIONAL ENGINEER
6355 N.W. 36TH. ST., STE. 305
VIRGINIA GARDENS, FL. 33166
PHONE : (305) 871-1530 , FAX : (305) 871-1531
TEXAS LIC. # 90691
FIRM REGISTRATION # F-13790

heroal RS 53 RC 3 SLAT ENGAGED ROLL-UP SHUTTER

heroal-Johann Henkenjohann GmbH & Co. KG
Osterwieher Str. 80
33415 Verl.

REV. NO	DESCRIPTION	DATE	REV. No	DESCRIPTION	DATE
1			3		
2			4		

DRAWN BY: L.C.
11/06/17 DATE:
17-287 DRAWING No.
SHEET 4 OF 27

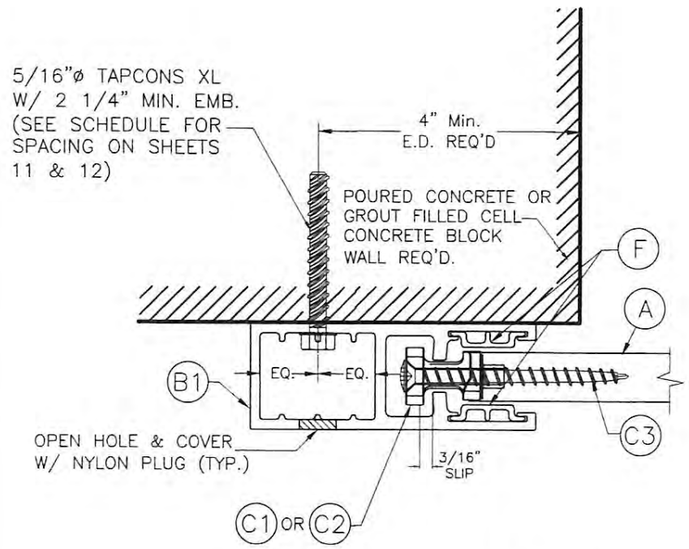

SECTION A–A (@ C3) (1):
WALL MOUNT

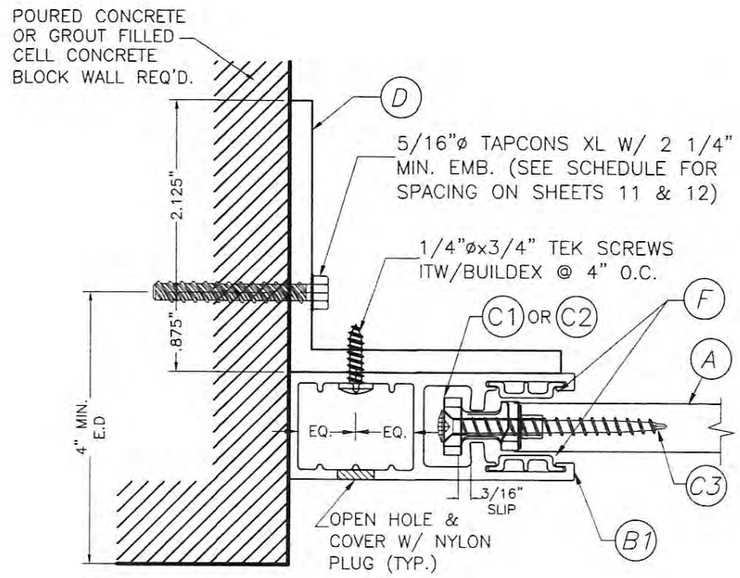

SECTION A–A (@ C3) (2):
INSIDE WALL MOUNT

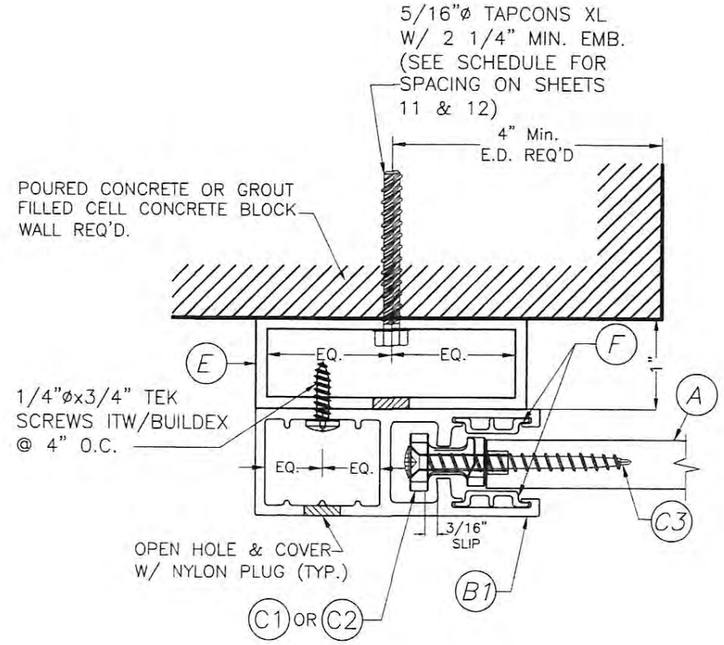

SECTION A–A (@ C3) (3):
BUILD–OUT MOUNT

SIDE RAIL CONNECTIONS TO POURED CONCRETE OR GROUT FILLED CELL CONCRETE BLOCK WALL

(VALID ONLY FOR SHUTTERS WITHOUT STORM BARS & HEADERS)

TEXAS DEPARTMENT OF INSURANCE – 2006

STATE OF TEXAS
WALTER A. TILLIT, JR.
LICENSED PROFESSIONAL ENGINEER
P.E. SEAL/SIGNATURE/DATE

WALTER A. TILLIT Jr. P.E.
PROFESSIONAL ENGINEER
6355 N.W. 36TH. ST., STE. 305
VIRGINA GARDENS, FL 33166
PHONE : (305) 871-1530 , FAX : (305) 871-1531
TEXAS LIC. # 90691
FIRM REGISTRATION # F-13790

heroal RS 53 RC 3 SLAT
ENGAGED ROLL–UP SHUTTER

heroal–Johann Henkenjohann GmbH & Co. KG
Osterwieher Str. 80
33415 Verl.

REV. NO	DESCRIPTION	DATE	REV. No	DESCRIPTION	DATE
1			3		
2			4		

DRAWN BY: L.C.
DATE: 11/06/17
DRAWING No. 17–287
SHEET 5 OF 27

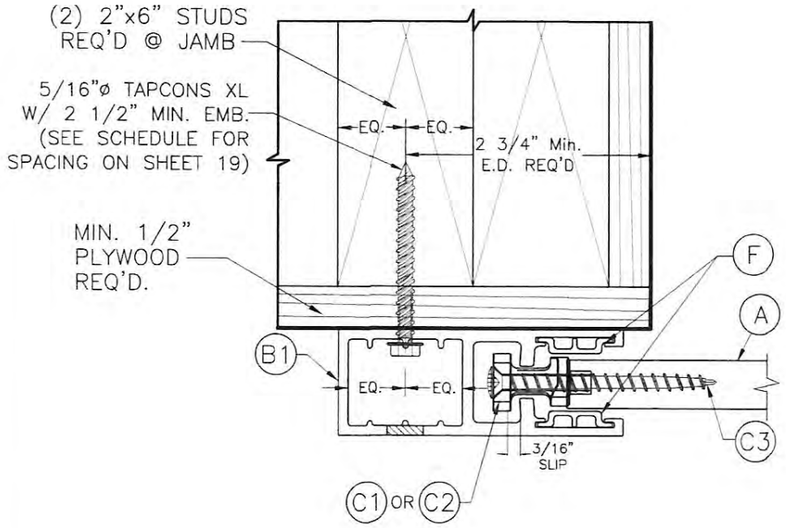

SECTION B–B (@ C3) (1): WALL MOUNT

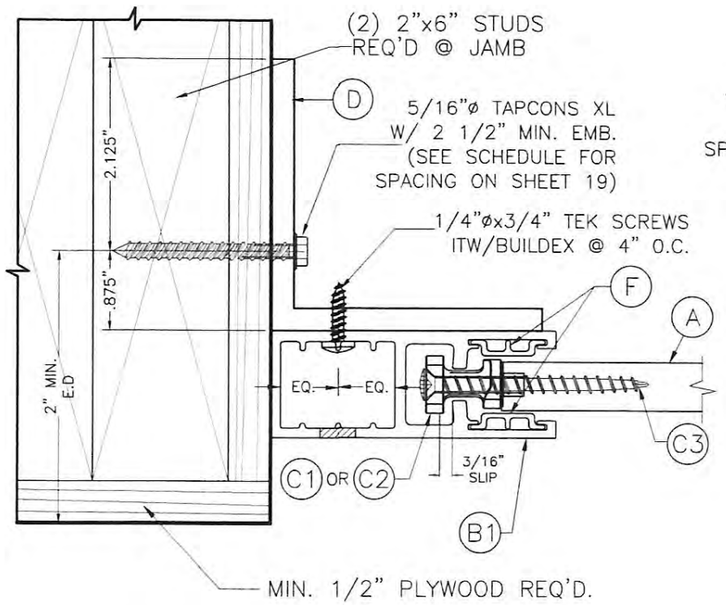

SECTION B–B (@ C3) (2): INSIDE WALL MOUNT

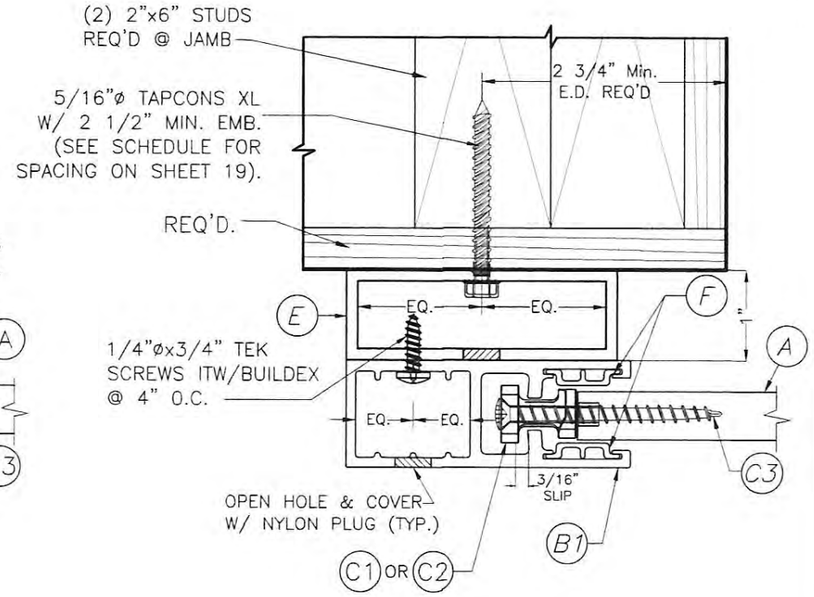

SECTION B–B (@ C3) (3): BUILD-OUT MOUNT

SIDE RAIL CONNECTIONS TO WOOD WALL

(VALID ONLY FOR SHUTTERS WITHOUT STORM BARS & HEADERS)

STATE OF TEXAS
WALTER A. TILLIT, JR.
90691
LICENSED
PROFESSIONAL ENGINEER

P.E. SEAL/SIGNATURE/DATE

WALTER A. TILLIT Jr. P.E.
PROFESSIONAL ENGINEER
6355 N.W. 36TH. ST., STE. 305
VIRGINIA GARDENS, FL 33166
PHONE : (305) 871-1530 , FAX : (305) 871-1531
TEXAS LIC. # 90691
FIRM REGISTRATION # F-13790

TEXAS DEPARTMENT OF INSURANCE – 2006

heroal RS 53 RC 3 SLAT
ENGAGED ROLL-UP SHUTTER

heroal-Johann Henkenjohann GmbH & Co. KG
Osterwieher Str. 80
33415 Verl.

REV. NO	DESCRIPTION	DATE	REV. No	DESCRIPTION	DATE
1			3		
2			4		

DRAWN BY: L.C.
DATE: 11/06/17
DRAWING No. 17-287
SHEET 6 OF 27

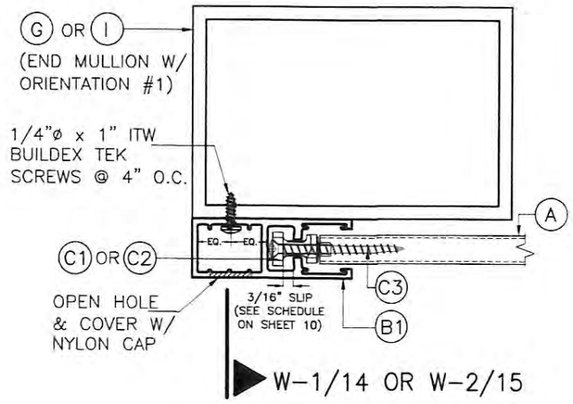

SECTION Q-Q:
MULLION MOUNT (FACE MOUNT)

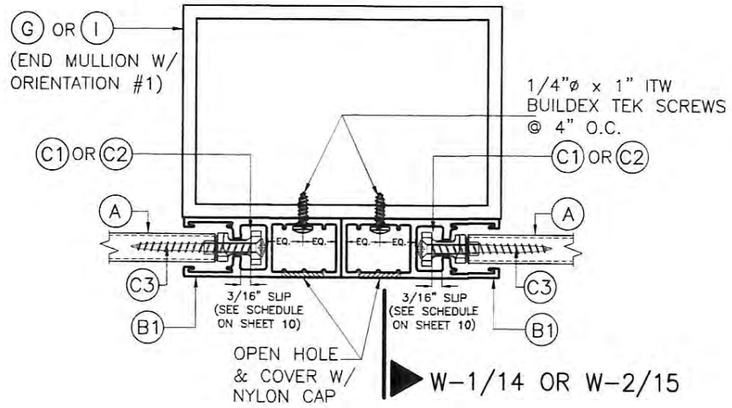

SECTION R-R:
MULLION MOUNT (FACE MOUNT)

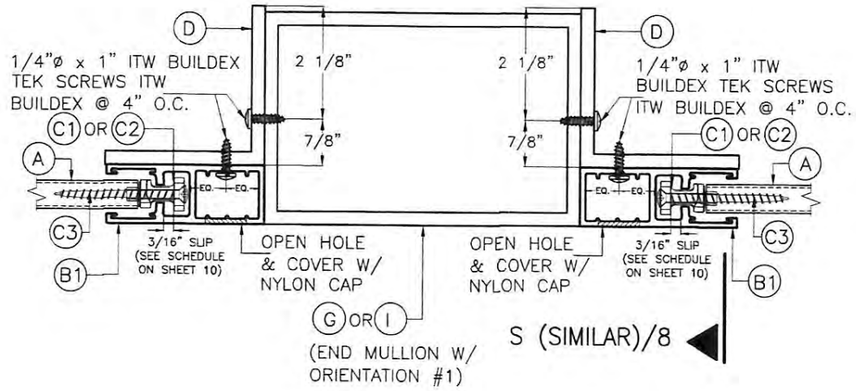

SECTION R'-R':
MULLION MOUNT (INSIDE MOUNT)

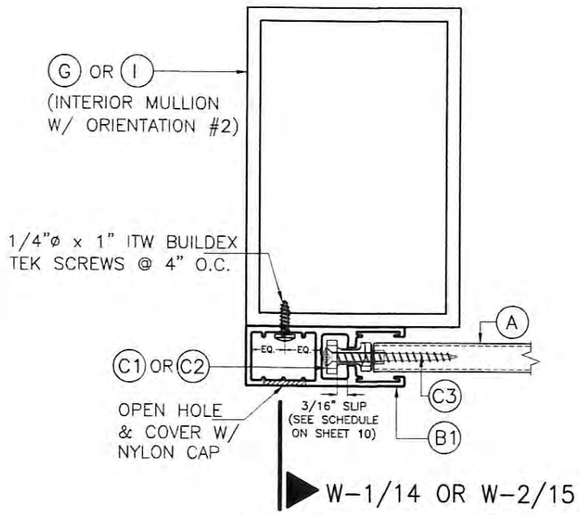

SECTION Q-Q:
MULLION MOUNT (FACE MOUNT)

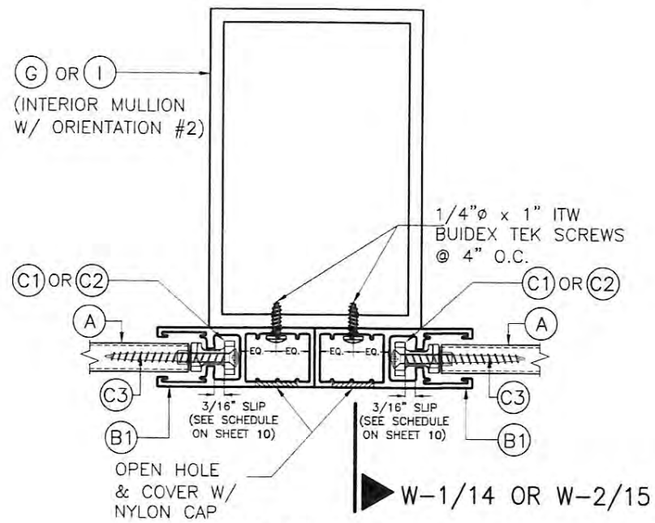

SECTION R-R:
MULLION MOUNT (FACE MOUNT)

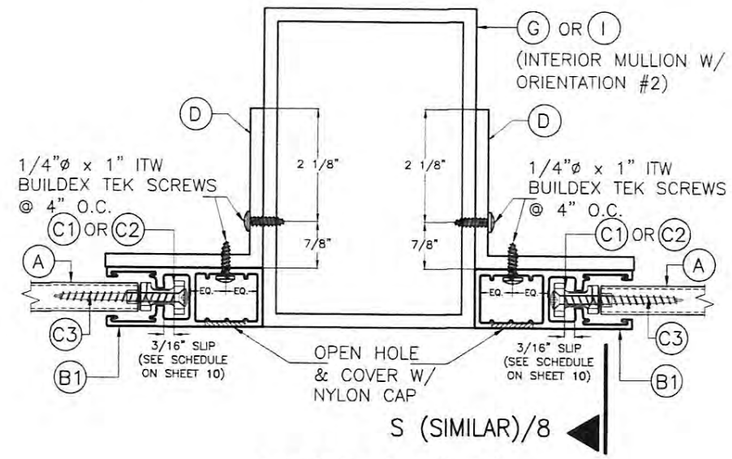

SECTION R'-R':
MULLION MOUNT (INSIDE MOUNT)

SIDE RAIL CONNECTION TO MULLIONS

SCALE: 3/8" = 1"

(VALID ONLY FOR SHUTTERS WITHOUT STORM BARS & HEADERS)

STATE OF TEXAS
WALTER A. TILLIT, JR.
90691
LICENSED PROFESSIONAL ENGINEER
11/06/17

P.E. SEAL/SIGNATURE/DATE

WALTER A. TILLIT Jr. P.E.
PROFESSIONAL ENGINEER
6355 N.W. 36TH. ST., STE. 305
VIRGINA GARDENS, FL. 33166
PHONE : (305) 871-1530 , FAX : (305) 871-1531
TEXAS LIC. # 90691
FIRM REGISTRATION # F-13790

TEXAS DEPARTMENT OF INSURANCE - 2006

heroal RS 53 RC 3 SLAT ENGAGED ROLL-UP SHUTTER

heroal-Johann Henkenjohann GmbH & Co. KG
Osterwieher Str. 80
33415 Verl.

REV. NO	DESCRIPTION	DATE	REV. No	DESCRIPTION	DATE
1			3		
2			4		

DRAWN BY: L.C.
DATE: 11/06/17
DRAWING No. 17-287
SHEET 7 OF 27

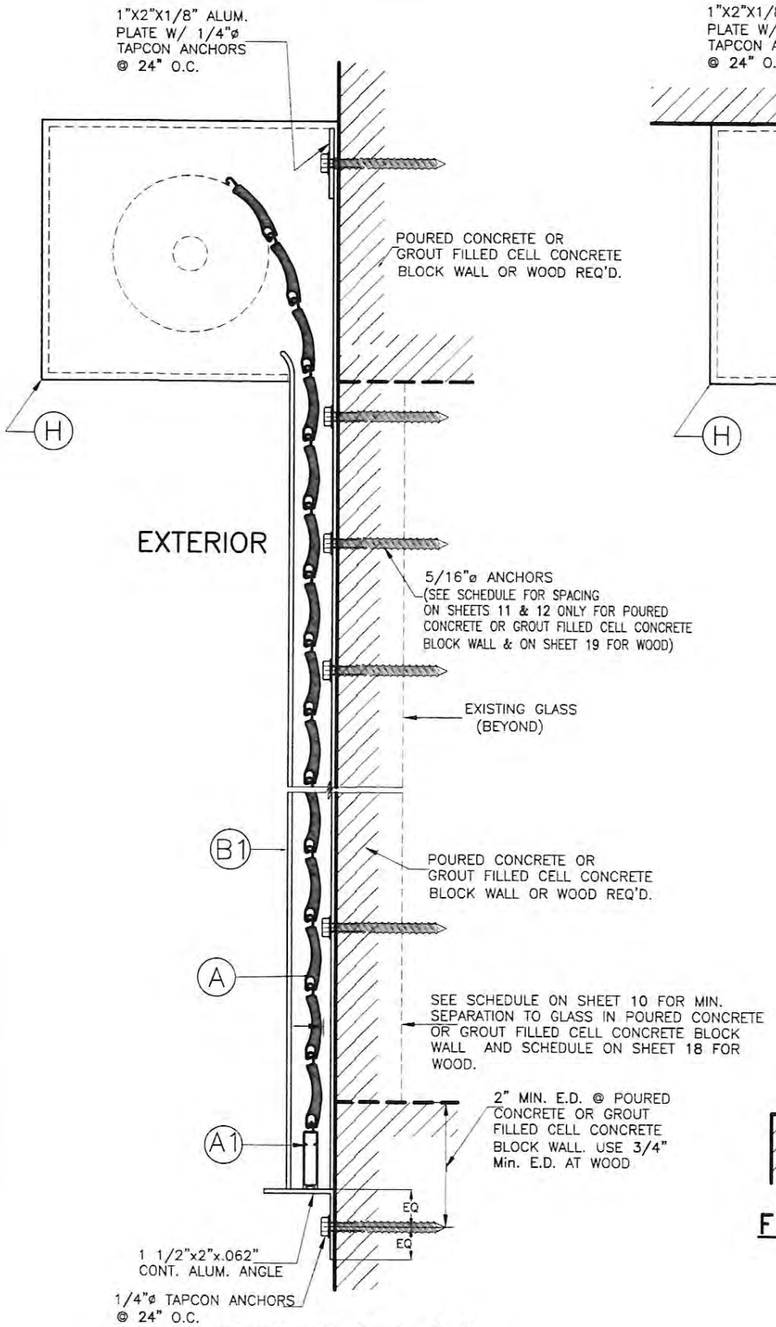

SECTION C–C (1)
WALL MOUNTING

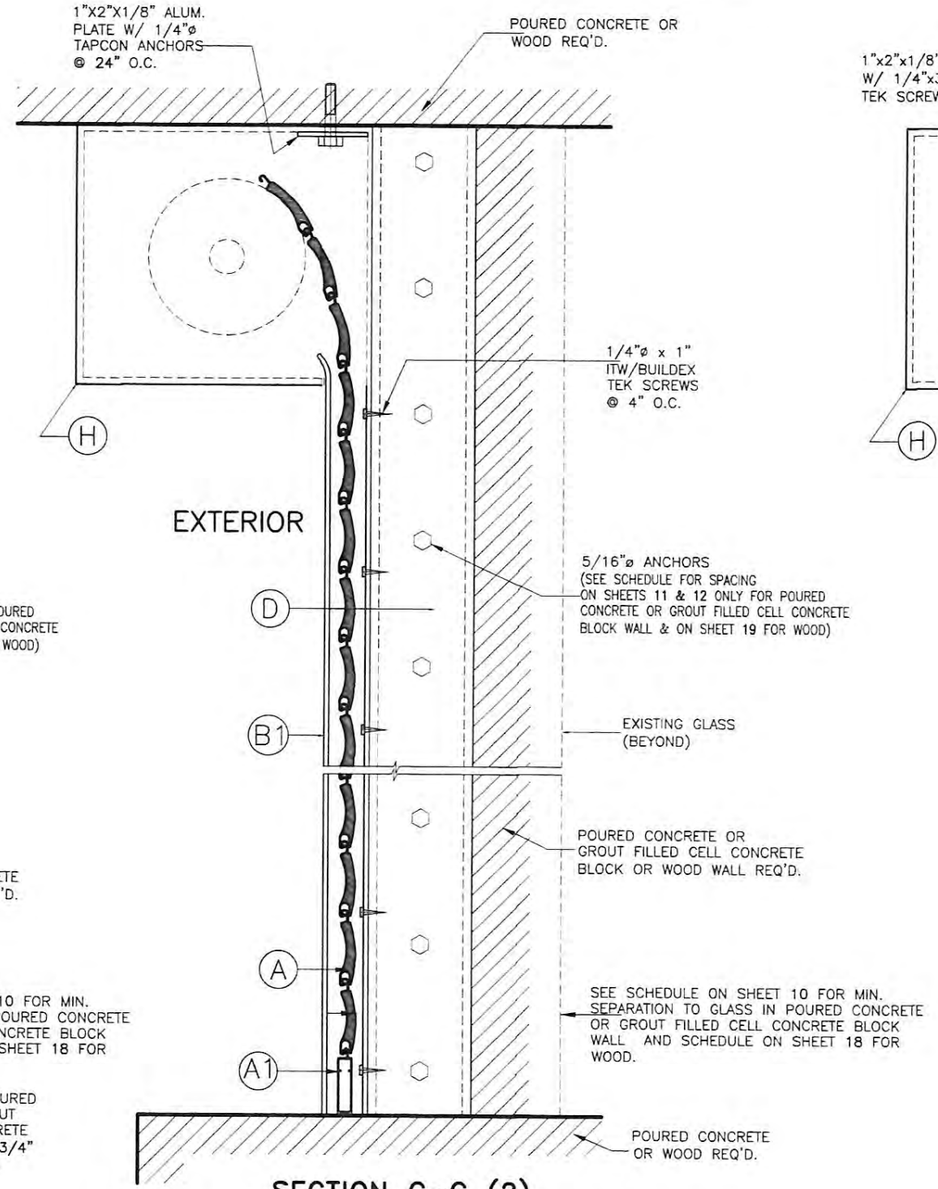

SECTION C–C (2)
FLOOR / CEILING TRAPPED MOUNTING

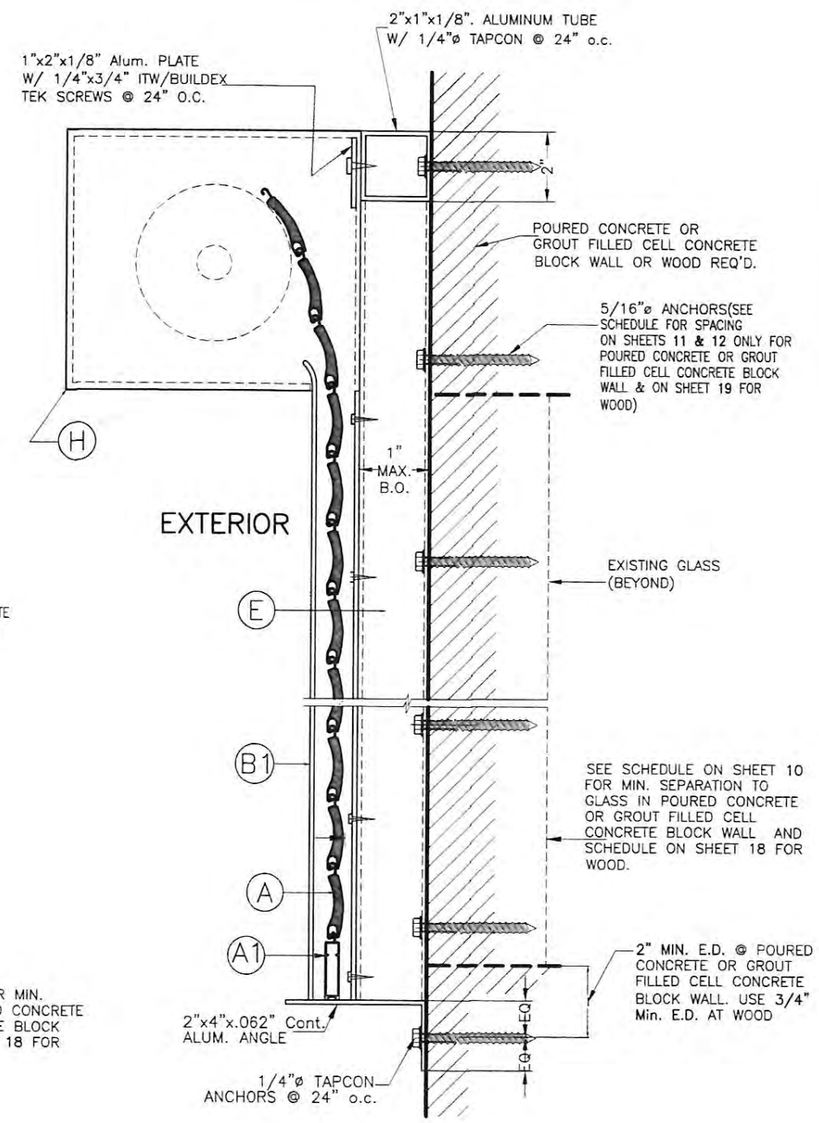

SECTION C–C (3)
BUILD–OUT MOUNTING

(VALID ONLY FOR SHUTTERS WITHOUT STORM BARS & HEADERS)

STATE OF TEXAS
WALTER A. TILLIT, JR.
90691
LICENSED PROFESSIONAL ENGINEER
11/14/15
P.E. SEAL/SIGNATURE/DATE

WALTER A. TILLIT Jr. P.E.
PROFESSIONAL ENGINEER
6355 N.W. 36TH. ST., STE. 305
VIRGINIA GARDENS, FL. 33166
PHONE : (305) 871–1530 , FAX : (305) 871–1531
TEXAS LIC. # 90691
FIRM REGISTRATION # F–13790

TEXAS DEPARTMENT OF INSURANCE – 2006

heroal RS 53 RC 3 SLAT ENGAGED ROLL–UP SHUTTER

heroal–Johann Henkenjohann GmbH & Co. KG
Osterwieher Str. 80
33415 Verl.

REV. NO	DESCRIPTION	DATE	REV. No	DESCRIPTION	DATE
1			3		
2			4		

DRAWN BY: L.C.
DATE: 11/06/17
DRAWING No. 17–287
SHEET 8 OF 27

TYPICAL MANDATORY PROCEDURE FOR VERIFYING SHUTTER CODE COMPLIANCE RELATED TO ITS INSTALLATION INTO EXISTING POURED CONCRETE OR GROUT FILLED CELL CONCRETE BLOCK STRUCTURES (*)

(VALID ONLY FOR SHUTTERS WITHOUT STORM BARS & HEADERS)

STEP 1:

OBTAIN JOB SITE'S DESIGN LOAD (p.s.f.) FOR THE OPENING AND DESIRED SHUTTER SPAN "L" (ft) TO PROTECT IT (SEE GENERAL NOTE #1, ON SHEET 1).

STEP 2:

ENTER TO CHARTS I AND II ON SHEET 10 TO DETERMINE, BASED ON A 3/16" SLAT SLIP (in); DESIGN LOAD (p.s.f.); AND SHUTTER SPAN "L" (ft) ; THE REQUIRED MAXIMUM SLAT SLIP THAT SLATS MUST BE INSTALLED WITH TO MEET THE REQUIRED LOAD AND DESIRED SHUTTER SPAN.

•MINIMUM REQUIRED SEPARATION TO GLASS IS PROVIDED ON CHARTS I AND II: PROVIDES SEPARATION TO GLASS FOR SHUTTERS WITH OR WITHOUT MULLIONS BASED ON SHUTTER INSTALLATIONS WITHIN WIND ZONES 1 THRU 4, AS DEFINED BY ASTM E 1996-05, SECTION 6.2.2.

STEP 3:

OBTAIN INFORMATION ON SHUTTER'S SIDE RAIL ANCHOR SPACING REQUIREMENTS FOR CONNECTION TO EXISTING STRUCTURE FROM ANCHOR SCHEDULES ON SHEETS 11 & 12. ENTER SCHEDULE WITH FINALLY DETERMINED SUBSTRATE, MOUNTING TYPE, DESIGN LOAD & SHUTTER SPAN AND OBTAIN MAXIMUM ANCHOR SPACING (INCHES ON CENTERS). SEE GENERAL NOTE 6 ON SHEET 1 FOR ANCHOR SPECS.

STEP 4:

IF SHUTTER INSTALLATION INCLUDES MULLIONS, THE FOLLOWING MANDATORY ADDITIONAL PROCEDURE IS APPLICABLE.

PROCEDURE 4a: IF MULLIONS ARE USED

1. MINIMUM SEPARATION TO GLASS FOR SLATS IF MULLIONS ARE USED SHALL BE BASED ON INSTALLATIONS PERFORMED WITHIN ASTM WIND ZONES 1 THRU 4 INDICATED ON CHARTS I AND II ON SHEET 10. IT SHALL BE MEASURED FROM BACK OF SLATS TO GLASS. FOR INSTALLATIONS WITHIN ASTM WIND ZONES 1 THRU 3 WHERE MINIMIZING OF THE PROBABILITY OF BREACHING OF GLASS IS DESIRED EVEN THOUGH IT IS NOT REQUIRED BY THE INTERNATIONAL BUILDING CODE, MINIMUM SEPARATION TO GLASS FOR SLATS SHALL BE IDENTICAL TO WIND ZONE 4 VALUES.
2. ENTER SCHEDULES 1a THRU 2c ON SHEETS 16 & 17 W/ DESIGN LOAD ; MAXIMUM MULLION SPACING (MAX., 10', 8' OR 6'), AND DETERMINE MAXIMUM MULLION SPAN (HEIGHT) W/ ALLOWABLE INTERPOLATION IN BETWEEN SPACINGS FOR A GIVEN Ⓖ & Ⓘ, MULLION TYPE & MULLION ORIENTATION.
3. SEE SHEETS 14 & 15 FOR REQUIRED MULLION CONNECTION DETAILS AT TOP & BOTTOM FOR FLOOR TO CEILING (TRAPPED) OR WALL MOUNTINGS OF MULLIONS INTO CONCRETE FOR A GIVEN MULLION TYPE Ⓖ & Ⓘ.

* PROCEDURE PER STEPS 1 THRU 3 IS SIMILAR FOR INSTALLATIONS INTO WOOD FRAME STRUCTURES. SEE SHEETS 18 & 19 FOR LIMITATIONS APPLICABLE TO INSTALLATIONS INTO WOOD FRAME STRUCTURES.

STATE OF TEXAS
WALTER A. TILLIT, JR.
90691
LICENSED
PROFESSIONAL ENGINEER

P.E. SEAL/SIGNATURE/DATE

WALTER A. TILLIT Jr. P.E.
PROFESSIONAL ENGINEER
6355 N.W. 36TH. ST., STE. 305
VIRGINIA GARDENS, FL. 33166
PHONE : (305) 871-1530 , FAX : (305) 871-1531
TEXAS LIC. # 90691
FIRM REGISTRATION # F-13790

TEXAS DEPARTMENT OF INSURANCE - 2006

heroal RS 53 RC 3 SLAT ENGAGED ROLL-UP SHUTTER

heroal-Johann Henkenjohann GmBH & Co. KG
Osterwieher Str. 80
33415 Verl.

REV. NO	DESCRIPTION	DATE	REV. No	DESCRIPTION	DATE
1			3		
2			4		

DRAWN BY: L.C.
11/06/17
DATE:
17-287
DRAWING No.
SHEET 9 OF 27

SLAT PERFORMANCE CHARTS I, II & III:
VALID FOR INSTALLATIONS INTO POURED CONCRETE, GROUT FILLED CELL CONCRETE BLOCK OR MULLIONS AND FOR A GIVEN DESIGN LOAD (p.s.f.) AND SHUTTER MOUNT CONDITION

(VALID ONLY FOR SHUTTERS WITHOUT STORM BARS & HEADERS)

CHART I (ONLY VALID FOR 3/16" SLIP) (INTO POURED CONCRETE)

USE MAXIMUM VALUE BETWEEN POSITIVE AND NEGATIVE LOAD				USE MAXIMUM POSITIVE LOAD VALUE
MAXIMUM DESIGN PRESSURE RATING (p.s.f.)	MAX. SLAT SPAN			MIN. SEPARATION TO GLASS (in) (SEE NOTES *)
	WALL MOUNT (SEE NOTES *)	TRAPPED MOUNT (SEE NOTES *)	BUILD-OUT MOUNT (SEE NOTES *) (E)	
30.0	10'-0"	10'-0"	10'-0"	5 1/2"
35.0	10'-0"	10'-0"	10'-0"	5 1/2"
40.0	10'-0"	10'-0"	10'-0"	5 1/2"
45.0	10'-0"	10'-0"	10'-0"	5 1/2"
50.0	10'-0"	10'-0"	10'-0"	5 1/2"
55.0	10'-0"	10'-0"	10'-0"	5 1/2"
60.0	10'-0"	10'-0"	10'-0"	5 1/2"
63.3	10'-0"	10'-0"	10'-0"	5 1/2"
65.0	9'-9"	9'-9"	9'-9"	5 1/2"
70.0	9'-0"	9'-0"	9'-0"	5 1/2"
75.0	8'-5"	8'-5"	8'-5"	5 1/2"
80.0	7'-11"	7'-11"	7'-11"	5 1/2"
85.0	7'-5"	7'-5"	7'-5"	5 1/2"
90.0	7'-0"	7'-0"	7'-0"	5 1/2"
92.0	6'-6"	6'-6"	6'-6"	4 5/8"

CHART II (ONLY VALID FOR 3/16" SLIP) (INTO GROUT FILL CONCRETE BLOCK)

USE MAXIMUM VALUE BETWEEN POSITIVE AND NEGATIVE LOAD				USE MAXIMUM POSITIVE LOAD VALUE
MAXIMUM DESIGN PRESSURE RATING (p.s.f.)	MAX. SLAT SPAN			MIN. SEPARATION TO GLASS (in) (SEE NOTES *)
	WALL MOUNT (SEE NOTES *)	TRAPPED MOUNT (SEE NOTES *)	BUILD-OUT MOUNT (SEE NOTES *) (E)	
30.0	10'-0"	10'-0"	10'-0"	5 1/2"
35.0	10'-0"	10'-0"	10'-0"	5 1/2"
40.0	10'-0"	10'-0"	10'-0"	5 1/2"
45.0	10'-0"	10'-0"	10'-0"	5 1/2"
50.0	10'-0"	10'-0"	10'-0"	5 1/2"
55.0	10'-0"	10'-0"	10'-0"	5 1/2"
60.0	10'-0"	10'-0"	9'-6"	5 1/2"
63.3	10'-0"	10'-0"	9'-2"	5 1/2"
65.0	9'-9"	9'-9"	9'-1"	5 1/2"
70.0	9'-0"	9'-0"	8'-9"	5 1/2"
75.0	8'-5"	8'-5"	8'-5"	5 1/2"
80.0	7'-11"	7'-11"	7'-11"	5 1/2"
85.0	7'-5"	7'-5"	7'-5"	5 1/2"
90.0	7'-0"	7'-0"	7'-0"	5 1/2"
92.0	6'-6"	6'-6"	6'-6"	4 5/8"

*** NOTES:**

1. ABOVE INDICATED MAX. SLAT SPANS MAY BE USED AS LONG AS ANCHOR SPACING SCHEDULES ON SHEETS 11 & 12 INDICATE THAT A SPACING IS AVAILABLE FOR THE CORRESPONDING SLAT SPAN AND DESIGN LOAD.
2. REQUIRES SIDE RAILS FASTENED TO EXISTING STRUCTURE WITH 5/16"ø ITW BUILDEX TAPCON XL INTO POURED CONCRETE OR GROUT FILLED CELL CONCRETE BLOCK OR 1/4"ø TEK SCREWS AT MULLIONS CONNECTION VALID FOR WALL MOUNTED, INSIDE MOUNTED, AND BUILD-OUT MOUNTED.
3. MAXIMUM SLAT SPANS FOR INTERMEDIATE LOADS MAY BE DETERMINED BY LINEAR INTERPOLATION BETWEEN END VALUES.
4. MINIMUM SEPARATION TO GLASS FOR WIND ZONES 1, 2 & 3 IS 1" AND AS SHOWN ON CHARTS I & II FOR WIND ZONE 4.

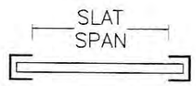

SLAT SPAN DEFINITION

TEXAS DEPARTMENT OF INSURANCE - 2006

STATE OF TEXAS
WALTER A. TILLIT, JR.
90691
SIGNED
11/06/17
PROFESSIONAL ENGINEER

P.E. SEAL/SIGNATURE/DATE

WALTER A. TILLIT Jr. P.E.
PROFESSIONAL ENGINEER
6355 N.W. 36TH. ST., STE. 305
VIRGINIA GARDENS, FL 33166
PHONE : (305) 871-1530 , FAX : (305) 871-1531
TEXAS LIC. # 90691
FIRM REGISTRATION # F-13790

heroal RS 53 RC 3 SLAT ENGAGED ROLL-UP SHUTTER

heroal-Johann Henkenjohann GmbH & Co. KG
Osterwieher Str. 80
33415 Verl.

REV. NO	DESCRIPTION	DATE	REV. No	DESCRIPTION	DATE
1			3		
2			4		

DRAWN BY: L.C.
DATE: 11/06/17
DRAWING No. 17-287

MAX. ANCHOR'S SPACING SCHEDULE IV FOR A GIVEN PRODUCT MOUNTING TYPE W/ ø 5/16" ITW BUILDEX TAPCON XL ANCHORS TO POURED CONCRETE WALL ♠

DESIGN PRESSURE RATING & SLAT SPAN RANGE

(VALID ONLY FOR SHUTTERS WITHOUT STORM BARS & HEADERS)

WALL MOUNT

MAX. DESIGN PRESSURE RATING RANGE	SLAT SPAN RANGE					
	0' to 4'	> 4' to 5'	> 5' to 6'	> 6' to 7'	> 7' to 9'	> 9' to 10'
≤ 30.0	6"	6"	6"	6"	6"	6"
>31–40	6"	6"	6"	6"	6"	6"
>41–63.3	6"	6"	6"	6"	6"	5 1/4"
>63.3–80	6"	6"	6"	6"	5"	4"
>81–92	6"	6"	6"	5 1/2"	4"	–

TRAPPED MOUNT

MAX. DESIGN PRESSURE RATING RANGE	SLAT SPAN RANGE					
	0' to 4'	> 4' to 5'	> 5' to 6'	> 6' to 7'	> 7' to 9'	> 9' to 10'
≤ 30.0	6"	6"	6"	6"	6"	6"
>31–40	6"	6"	6"	6"	6"	6"
>41–63.3	6"	6"	6"	6"	5 1/4"	4 1/2"
>63.3–80	6"	6"	6"	6"	4"	–
>81–92	6"	6"	6"	6"	–	–

BUILD-OUT MOUNT W/ (E)

MAX. DESIGN PRESSURE RATING RANGE	SLAT SPAN RANGE					
	0' to 4'	> 4' to 5'	> 5' to 6'	> 6' to 7'	> 7' to 9'	> 9' to 10'
≤ 30.0	4"	4"	4"	4"	4"	4"
>31–40	4"	4"	4"	4"	4"	4"
>41–63.3	4"	4"	4"	4"	4"	3 3/4"
>63.3–80	4"	4"	4"	4"	–	–
>81–92	4"	4"	4"	4"	–	–

SLAT SPAN DEFINITION

♠ **NOTE:**

MAX. SPAN FOR SLAT FOR A GIVEN DESIGN PRESSURE RATING SHALL **NEVER** EXCEED MAX. SLAT SPAN INDICATED ON SLAT PERFORMANCE CHART ON SHEET 10.

STATE OF TEXAS
WALTER A. TILLIT, JR.
LICENSED PROFESSIONAL ENGINEER

P.E. SEAL/SIGNATURE/DATE

WALTER A. TILLIT Jr. P.E.
PROFESSIONAL ENGINEER
6355 N.W. 36TH. ST., STE. 305
VIRGINIA GARDENS, FL. 33166
PHONE : (305) 871–1530 , FAX : (305) 871–1531
TEXAS LIC. # 90691
FIRM REGISTRATION # F–13790

TEXAS DEPARTMENT OF INSURANCE – 2006

heroal RS 53 RC 3 SLAT ENGAGED ROLL–UP SHUTTER

heroal–Johann Henkenjohann GmbH & Co. KG
Osterwieher Str. 80
33415 Verl.

REV. NO	DESCRIPTION	DATE	REV. No	DESCRIPTION	DATE
1			3		
2			4		

DRAWN BY: L.C.
DATE: 11/06/17
DRAWING No. 17–287
SHEET 11 OF 27

MAX. ANCHOR'S SPACING SCHEDULE IV FOR A GIVEN PRODUCT MOUNTING TYPE W/ ø 5/16" ITW BUILDEX TAPCON XL ANCHORS TO GROUTED CONCRETE BLOCK WALL ♠

DESIGN PRESSURE RATING & SLAT SPAN RANGE

(VALID ONLY FOR SHUTTERS WITHOUT STORM BARS & HEADERS)

WALL MOUNT

MAX. DESIGN PRESSURE RATING RANGE	SLAT SPAN RANGE					
	0' to 4'	> 4' to 5'	> 5' to 6'	> 6' to 7'	> 7' to 9'	> 9' to 10'
≤ 30.0	6"	6"	6"	6"	6"	6"
>31–40	6"	6"	6"	6"	6"	6"
>41–63.3	6"	6"	6"	6"	5 1/4"	4 1/4"
>63.3–80	6"	6"	6"	6"	4"	–
>81–92	6"	6"	6"	6"	–	–

TRAPPED MOUNT

MAX. DESIGN PRESSURE RATING RANGE	SLAT SPAN RANGE					
	0' to 4'	> 4' to 5'	> 5' to 6'	> 6' to 7'	> 7' to 9'	> 9' to 10'
≤ 30.0	6"	6"	6"	6"	6"	6"
>31–40	6"	6"	6"	6"	6"	6"
>41–63.3	6"	6"	6"	6"	5"	4"
>63.3–80	6"	6"	6"	6"	3 3/4"	–
>81–92	6"	6"	6"	5 1/2"	–	–

BUILD-OUT MOUNT W/ (E)

MAX. DESIGN PRESSURE RATING RANGE	SLAT SPAN RANGE					
	0' to 4'	> 4' to 5'	> 5' to 6'	> 6' to 7'	> 7' to 9'	> 9' to 10'
≤ 30.0	4"	4"	4"	4"	4"	4"
>31–40	4"	4"	4"	4"	4"	4"
>41–60	4"	4"	4"	4"	3 3/4"	–
>63.3–80	4"	4"	4"	4"	–	–
>81–92	4"	4"	4"	4"	–	–

SLAT SPAN DEFINITION

♠ **NOTE:**

MAX. SPAN FOR SLAT FOR A GIVEN DESIGN PRESSURE RATING SHALL **NEVER** EXCEED MAX. SLAT SPAN INDICATED ON SLAT PERFORMANCE CHART ON SHEET 10.

TEXAS DEPARTMENT OF INSURANCE – 2006

STATE OF TEXAS
WALTER A. TILLIT JR.
90691
LICENSED
PROFESSIONAL ENGINEER

P.E. SEAL/SIGNATURE/DATE

WALTER A. TILLIT Jr. P.E.
PROFESSIONAL ENGINEER
6355 N.W. 36TH. ST., STE. 305
VIRGINIA GARDENS, FL 33166
PHONE : (305) 871-1530 , FAX : (305) 871-1531
TEXAS LIC. # 90691
FIRM REGISTRATION # F-13790

heroal RS 53 RC 3 SLAT ENGAGED ROLL-UP SHUTTER

heroal-Johann Henkenjohann GmbH & Co. KG
Osterwieher Str. 80
33415 Verl.

REV. NO	DESCRIPTION	DATE	REV. No	DESCRIPTION	DATE
1			3		
2			4		

DRAWN BY: L.C.
DATE: 11/06/17
DRAWING No. 17-287
SHEET 12 OF 27

SCHEDULE V:

Vx FORCES (Lb/ft) & **Vy** FORCES (Lb/ft) ACTING AT JAMBS FOR A DESIGN PRESSURE RATING RANGE SLAT SPAN RANGE FOR POURED CONCRETE OR GROUT FILLED CELL CONCRETE BLOCK WALL BUILDINGS *

(USE MAXIMUM VALUE BETWEEN POSITIVE AND NEGATIVE LOAD)

(VALID FOR SHUTTERS WITH OR WITHOUT STORM BARS & HEADERS)

MAX. DESIGN PRESSURE RATING RANGE	SLAT SPAN RANGE											
	0' to 4'		>4' to 5'		> 5' to 6'		> 6' to 7'		> 7' to 9'		> 9' to 10'	
	Vy	Vx	Vy	Vx	Vy	Vx	Vy	Vx	Vy	Vx	Vy	Vx
≤ 30.0	60	0.0	75	0.0	90	0.0	105	0.0	135	371	150	572
>31–40	80	0.0	100	0.0	120	0.0	140	27	180	619	200	852
>41–63.3	127	0.0	158	0.0	190	0.0	222	451	285	1171	317	1477
>63.3–80	160	0.0	200	0.0	240	207	280	737	360	1551	400	1907
>81–92	184	0.0	230	0.0	276	379	322	937	414	1819	460	2210

*NOTE:

IT SHALL BE THE RESPONSIBILITY OF THE CONTRACTOR OR PERMIT HOLDER TO VERIFY THAT EXISTING STRUCTURE IS DESIGNED TO SUPPORT **Vx** AND **Vy** FORCES IN POUNDS PER UNIT FOOT OF PRODUCT HEIGHT AT BOTH JAMBS.
SEE THIS SHEET FOR **Vx** & **Vy** VALUES.

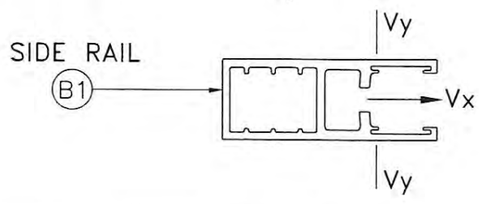

† NOTE: SLAT SPAN RANGE VALID FOR SHUTTERS WITH OR WITHOUT STORM BARS & HEADERS

†† NOTE: SLAT SPAN RANGE VALID FOR SHUTTERS WITHOUT STORM BARS & HEADERS

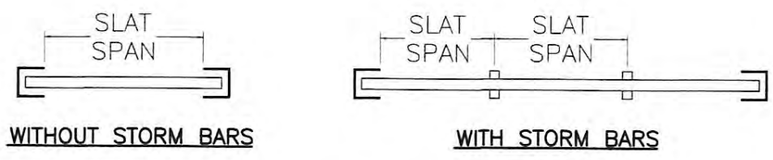

WITHOUT STORM BARS — WITH STORM BARS

SLAT SPAN DEFINITION

STATE OF TEXAS — WALTER A. TILLIT, JR. — 90691 — PROFESSIONAL ENGINEER

P.E. SEAL/SIGNATURE/DATE

WALTER A. TILLIT Jr. P.E.
PROFESSIONAL ENGINEER
6355 N.W. 36TH. ST., STE. 305
VIRGINIA GARDENS, FL. 33166
PHONE : (305) 871-1530 , FAX : (305) 871-1531
TEXAS LIC. # 90691
FIRM REGISTRATION # F-13790

TEXAS DEPARTMENT OF INSURANCE – 2006

heroal RS 53 RC 3 SLAT ENGAGED ROLL-UP SHUTTER

heroal-Johann Henkenjohann GmbH & Co. KG
Osterwieher Str. 80
33415 Verl.

REV. NO	DESCRIPTION	DATE	REV. No	DESCRIPTION	DATE
1			3		
2			4		

DRAWN BY: L.C.
DATE: 11/06/17
DRAWING No. 17-287
SHEET 13 OF 27

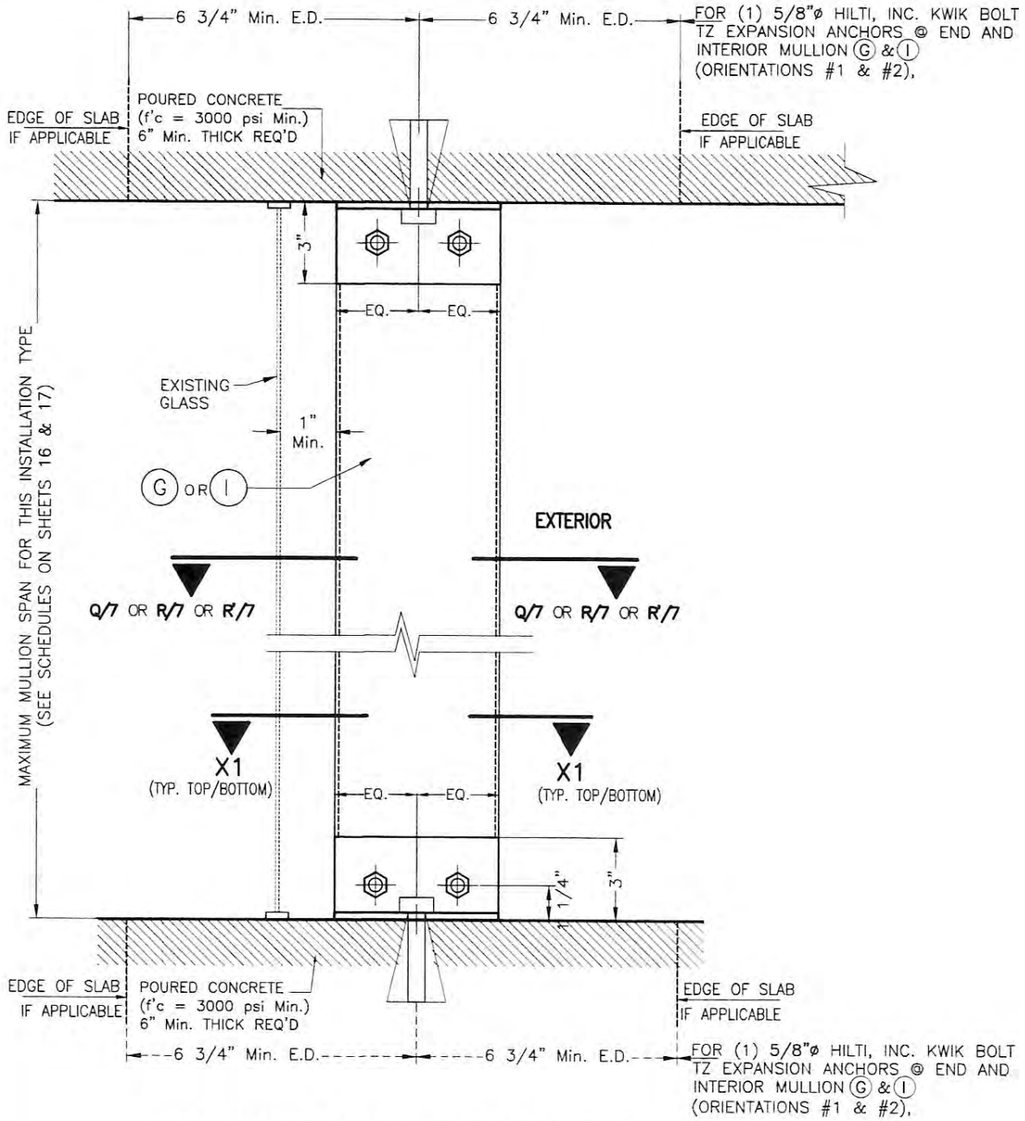

FLOOR TO CEILING / TRAPPED MOUNTING:
MULLION (G) OR (I)
SECTION W-1*

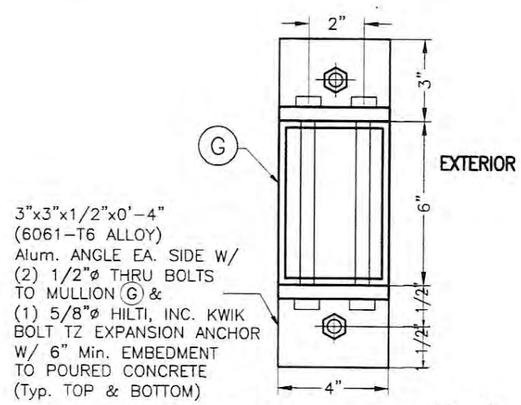

SECTION X1-X1 W/ (G) *

(END & INTERIOR MULLION W/ ORIENTATION # 1)

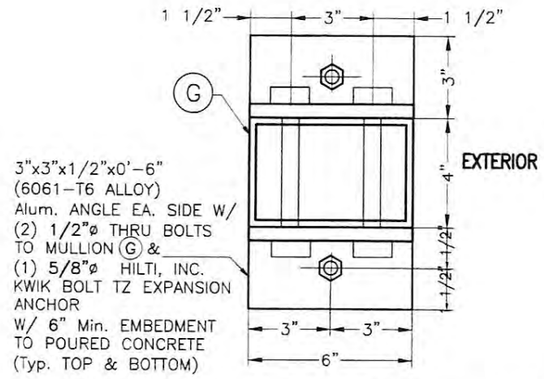

ALTERNATIVE SECTION X1-X1 W/ (G) *

(END & INTERIOR MULLION W/ ORIENTATION # 2)

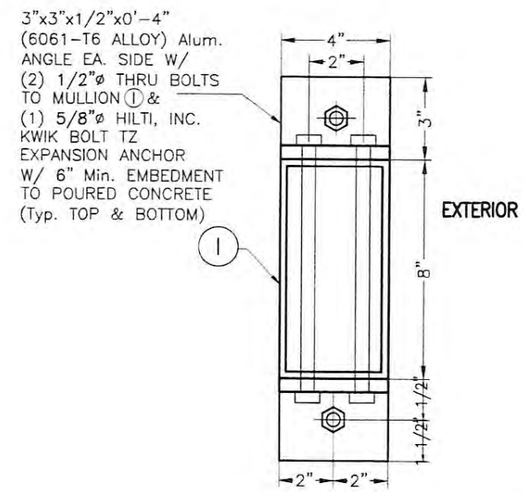

SECTION X1-X1 W/ (I) *

(END & INTERIOR MULLION W/ ORIENTATION # 1)

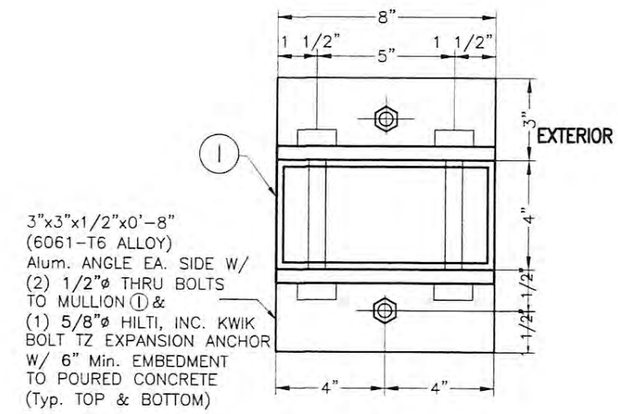

ALTERNATIVE SECTION X1-X1 W/ (I) *

(END & INTERIOR MULLION W/ ORIENTATION # 2)

* SIDE RAIL B1 AND BOX NOT SHOWN FOR CLARITY.

END & INTERIOR TRAPPED MOUNTED MULLION INSTALLATION

SCALE: 3/16" = 1"

(VALID ONLY FOR SHUTTERS WITHOUT STORM BARS & HEADERS)

STATE OF TEXAS
WALTER A. TILLIT, JR.
90691
PROFESSIONAL ENGINEER
10/11/17

P.E. SEAL/SIGNATURE/DATE

WALTER A. TILLIT Jr. P.E.
PROFESSIONAL ENGINEER
6355 N.W. 36TH. ST., STE. 305
VIRGINIA GARDENS, FL. 33166
PHONE : (305) 871-1530 , FAX : (305) 871-1531
TEXAS LIC. # 90691
FIRM REGISTRATION # F-13790

TEXAS DEPARTMENT OF INSURANCE - 2006

heroal RS 53 RC 3 SLAT ENGAGED ROLL-UP SHUTTER

heroal-Johann Henkenjohann GmbH & Co. KG
Osterwieher Str. 80
33415 Verl.

REV. NO	DESCRIPTION	DATE	REV. No	DESCRIPTION	DATE
1			3		
2			4		

DRAWN BY: L.C.
DATE: 11/06/17
DRAWING No. 17-287
SHEET 14 OF 27

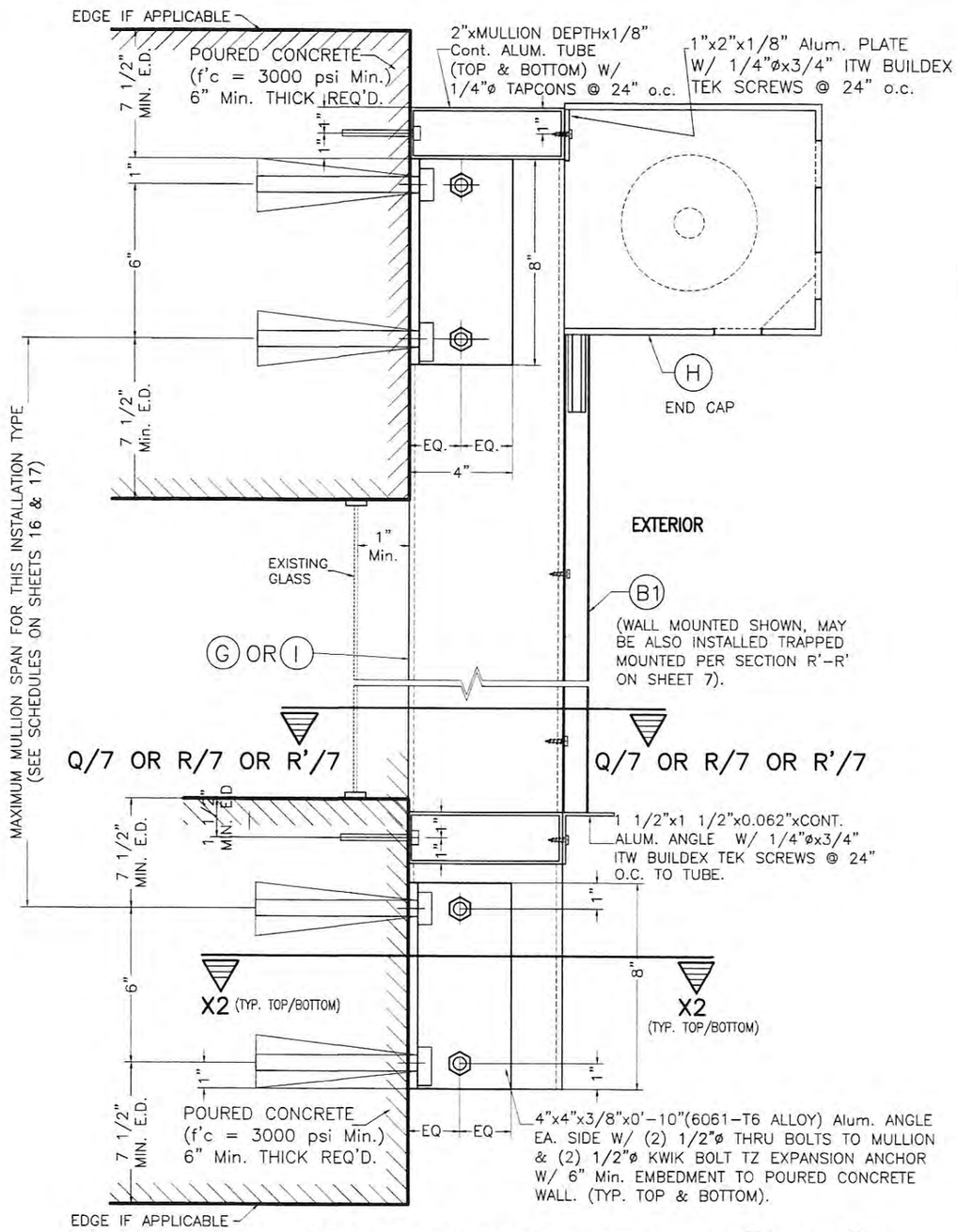

WALL MOUNTING : MULLION G OR I
POURED CONCRETE WALL
SECTION W-2 *

(VALID ONLY FOR SHUTTERS WITHOUT STORM BARS & HEADERS)

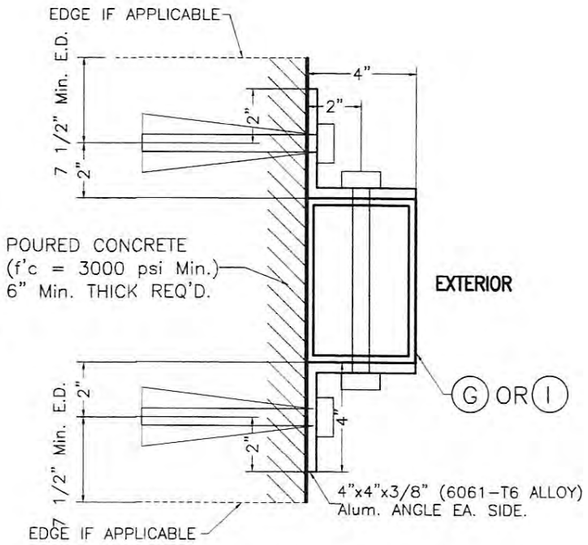

SECTION X2-X2 W/ G OR I *
(END & INTERIOR MULLION W/ ORIENTATION # 1)
(6"x4" OR 8"x4")

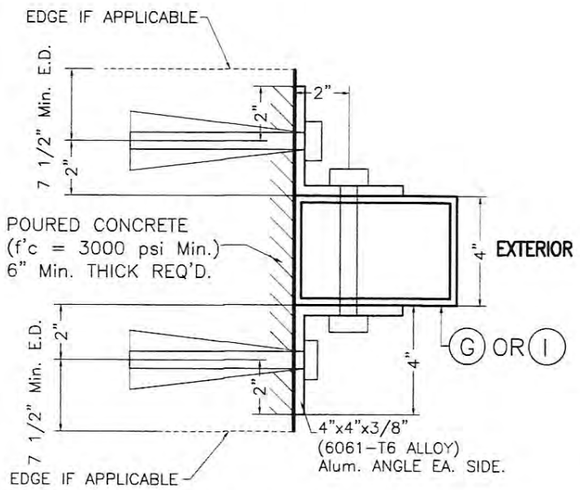

ALTERNATIVE SECTION X2-X2 W/ G OR I *
(END & INTERIOR MULLION W/ ORIENTATION # 2)
(4"x6" OR 4"x8")

* SIDE RAILS B1 NOT SHOWN FOR CLARITY.

END & INTERIOR WALL MOUNTED MULLION INSTALLATION

SCALE: 1/8" = 1"

TEXAS DEPARTMENT OF INSURANCE - 2006

STATE OF TEXAS
WALTER A. TILLIT, JR.
90691
LICENSED PROFESSIONAL ENGINEER

P.E. SEAL/SIGNATURE/DATE

WALTER A. TILLIT Jr. P.E.
PROFESSIONAL ENGINEER
6355 N.W. 36TH. ST., STE. 305
VIRGINIA GARDENS, FL 33166
PHONE : (305) 871-1530 , FAX : (305) 871-1531
TEXAS LIC. # 90691
FIRM REGISTRATION # F-13790

heroal RS 53 RC 3 SLAT ENGAGED ROLL-UP SHUTTER

heroal-Johann Henkenjohann GmbH & Co. KG
Osterwieher Str. 80
33415 Verl.

REV. NO	DESCRIPTION	DATE	REV. No	DESCRIPTION	DATE
1			3		
2			4		

DRAWN BY: L.C.
DATE: 11/06/17
DRAWING No. 17-287
SHEET 15 OF 27

SCHEDULE 1a
FLOOR TO CEILING (TRAPPED) MOUNTING
MAX. SPAN (ft.) FOR END AND INTERIOR MULLION FOR A GIVEN DESIGN LOAD (p.s.f.) AND A 10'-0" MAX. MULLION SPACING (ft.) *
VALID ONLY FOR INSTALLATIONS INTO CONCRETE

MAX. DESIGN PRESSURE RATING (p.s.f.)	MAXIMUM MULLION SPACING (ft) *	MAXIMUM MULLION SPAN (ft.)							
		(G) 4"x6"x1/4" MULLION				(I) 4"x8"x1/4" MULLION			
		ORIENTATION #1 (▭) ‡		ORIENTATION #2 (▯) ‡		ORIENTATION #1 (▭) ‡		ORIENTATION #2 (▯) ‡	
		END	INTERIOR	END	INTERIOR	END	INTERIOR	END	INTERIOR
30.0	10'-0"	12'-0"	12'-0"	10'-3"	12'-0"	12'-0"	12'-0"	11'-1"	12'-0"
35.0	10'-0"	11'-2"	11'-7"	9'-5"	12'-0"	12'-0"	12'-0"	10'-3"	12'-0"
40.0	10'-0"	10'-3"	11-1"	8-10"	12'-0"	12'-0"	12'-0"	9'-7"	12'-0"
45.0	10'-0"	9'-6"	10'-8"	8-5"	12'-0"	11'-3"	11'-7"	9'-1"	12'-0"
50.0	10'-0"	8'-11"	10'-4"	8-0"	11'-4"	9'-11"	11'-3"	8'-8"	12'-0"
55.0	10'-0"	8'-5"	10'-0"	7'-8"	10'-3"	8'-11"	10'-10"	8'-4"	12'-0"
60.0	10'-0"	8'-0"	9'-8"	7'-5"	9'-5"	8'-1"	10'-7"	7'-9"	12'-0"
63.3	10'-0"	7'-7"	9'-6"	7'-2"	8'-11"	7'-7"	10'-3"	7'-3"	12'-0"
65.0	9'-9"	7'-8"	9'-6"	7'-3"	8'-11"	7'-8"	10'-3"	7'-5"	12'-0"
70.0	9'-0"	8'-2"	9'-7"	7'-7"	9'-0"	8'-3"	10'-4"	7'-10"	12'-0"
75.0	8'-5"	8'-5"	9'-6"	7'-10"	8'-11"	8'-8"	10'-3"	8'-3"	12'-0"
80.0	7'-11"	8'-8"	9'-6"	8'-1"	8'-11"	9'-1"	10'-3"	8'-8"	12'-0"
85.0	7'-5"	9'-2"	9'-7"	8'-5"	9'-0"	9'-10"	10'-4"	9'-2"	12'-0"
90.0	7'-0"	9'-7"	9'-7"	8'-11"	9'-0"	10'-7"	10'-4"	9'-8"	12'-0"
92.0	6'-6"	11'-0"	9'-9"	10'-1"	9'-5"	12'-0"	10'-7"	11'-0"	12'-0"

SCHEDULE 2a
WALL MOUNTING
MAX. SPAN (ft.) FOR END AND INTERIOR MULLION FOR A GIVEN DESIGN LOAD (p.s.f.) AND A 10'-0" MAX. MULLION SPACING (ft.) *
VALID ONLY FOR INSTALLATIONS INTO CONCRETE

MAX. DESIGN PRESSURE RATING (p.s.f.)	MAXIMUM MULLION SPACING (ft) *	MAXIMUM MULLION SPAN (ft.)							
		(G) 4"x6"x1/4" MULLION				(I) 4"x8"x1/4" MULLION			
		ORIENTATION #1 (▭) ‡		ORIENTATION #2 (▯) ‡		ORIENTATION #1 (▭) ‡		ORIENTATION #2 (▯) ‡	
		END	INTERIOR	END	INTERIOR	END	INTERIOR	END	INTERIOR
30.0	10'-0"	12'-0"	12'-0"	10'-3"	12'-0"	12'-0"	12'-0"	11'-1"	12'-0"
35.0	10'-0"	11'-2"	11'-7"	9'-5"	12'-0"	12'-0"	12'-0"	10'-3"	12'-0"
40.0	10'-0"	10'-3"	11-1"	8-10"	12'-0"	12'-0"	12'-0"	9'-7"	12'-0"
45.0	10'-0"	9'-6"	10'-8"	8-5"	12'-0"	11'-3"	11'-7"	7'-6"	12'-0"
50.0	10'-0"	8'-11"	10'-4"	8-0"	12'-0"	10'-6"	11'-3"	6'-7"	12'-0"
55.0	10'-0"	8'-5"	10'-0"	7'-8"	12'-0"	9'-11"	10'-10"	5'-10"	12'-0"
60.0	10'-0"	8'-0"	9'-8"	7'-5"	12'-0"	9'-6"	10'-7"	5'-4"	12'-0"
63.3	10'-0"	7'-9"	9'-6"	5'-10"	11'-10"	9'-2"	10'-4"	5'-0"	12'-0"
65.0	9'-9"	7'-10"	9'-6"	5'-11"	11'-10"	9'-3"	10'-4"	5'-1"	12'-0"
70.0	9'-0"	8'-2"	9'-7"	7'-7"	11'-10"	9'-7"	10'-5"	5'-7"	12'-0"
75.0	8'-5"	8'-5"	9'-6"	7'-10"	11'-10"	9'-11"	10'-4"	6'-0"	12'-0"
80.0	7'-11"	8'-1"	9'-6"	8'-1"	11'-10"	10'-3"	10'-4"	6'-7"	12'-0"
85.0	7'-5"	8'-5"	9'-7"	8'-5"	11'-10"	10'-9"	10'-5"	7'-5"	12'-0"
90.0	7'-0"	8'-11"	9'-7"	8'-11"	11'-10"	11'-4"	10'-5"	9'-8"	12'-0"
92.0	6'-6"	10'-1"	9'-9"	10'-1"	12'-0"	12'-0"	10'-7"	11'-0"	12'-0"

(VALID ONLY FOR SHUTTERS WITHOUT STORM BARS & HEADERS)

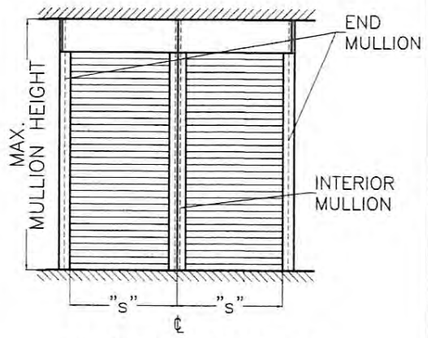

MULLION SPACING: "s"

* MAXIMUM MULLION SPACING SHALL BE SUCH THAT MAX SLAT SPAN FOR THAT DESIGN LOAD SHALL NOT BE EXCEEDED.

‡ MULLION ORIENTATION IS AS SEEN FROM THE OUTSIDE (EXTERIOR) OF SHUTTER.

SCHEDULE 1b
FLOOR TO CEILING (TRAPPED) MOUNTING
MAX. SPAN (ft.) FOR END AND INTERIOR MULLION FOR A GIVEN DESIGN LOAD (p.s.f.) AND A 8'-0" MAX. MULLION SPACING (ft.) *
VALID ONLY FOR INSTALLATIONS INTO CONCRETE

MAX. DESIGN PRESSURE RATING (p.s.f.)	MAXIMUM MULLION SPACING (ft) *	MAXIMUM MULLION SPAN (ft.)							
		(G) 4"x6"x1/4" MULLION				(I) 4"x8"x1/4" MULLION			
		ORIENTATION #1 (▭) ‡		ORIENTATION #2 (▯) ‡		ORIENTATION #1 (▭) ‡		ORIENTATION #2 (▯) ‡	
		END	INTERIOR	END	INTERIOR	END	INTERIOR	END	INTERIOR
30.0	8'-0"	12'-0"	12'-0"	12'-0"	12'-0"	12'-0"	12'-0"	12'-0"	12'-0"
35.0	8'-0"	12'-0"	12'-0"	12'-0"	12'-0"	12'-0"	12'-0"	12'-0"	12'-0"
40.0	8'-0"	12'-0"	12'-0"	11'-7"	12'-0"	12'-0"	12'-0"	12'-0"	12'-0"
45.0	8'-0"	12'-0"	11'-6"	10'-7"	12'-0"	12'-0"	12'-0"	11'-6"	12'-0"
50.0	8'-0"	11'-7"	11'-1"	9'-11"	12'-0"	12'-0"	12'-0"	10'-9"	12'-0"
55.0	8'-0"	10'-9"	10'-9"	9'-4"	12'-0"	12'-0"	11'-8"	10'-2"	12'-0"
60.0	8'-0"	10'-1"	10'-5"	8'-11"	11'-9"	11'-11"	11'-4"	9'-8"	12'-0"
63.3	8'-0"	9'-9"	10'-3"	8'-8"	11'-2"	11'-5"	11'-2"	9'-5"	12'-0"
65.0	8'-0"	9'-7"	10'-2"	8'-7"	10'-10"	11'-0"	11'-1"	9'-4"	12'-0"
70.0	8'-0"	9'-1"	9'-11"	8'-3"	10'-1"	10'-0"	10'-10"	9'-0"	12'-0"
75.0	8'-0"	8'-8"	9'-8"	8'-0"	9'-5"	9'-2"	10'-7"	8'-8"	12'-0"
80.0	7'-11"	7'-10"	9'-6"	7'-10"	8'-11"	8'-8"	10'-4"	8'-3"	12'-0"
85.0	7'-5"	8'-2"	9'-7"	8'-2"	9'-0"	9'-3"	10'-5"	8'-10"	12'-0"
90.0	7'-0"	8'-6"	9'-7"	8'-6"	9'-0"	9'-10"	10'-5"	9'-2"	12'-0"
92.0	6'-6"	9'-4"	9'-9"	9'-4"	9'-5"	11'-8"	10'-7"	10'-2"	12'-0"

SCHEDULE 2b
WALL MOUNTING
MAX. SPAN (ft.) FOR END AND INTERIOR MULLION FOR A GIVEN DESIGN LOAD (p.s.f.) AND A 8'-0" MAX. MULLION SPACING (ft.) *
VALID ONLY FOR INSTALLATIONS INTO CONCRETE

MAX. DESIGN PRESSURE RATING (p.s.f.)	MAXIMUM MULLION SPACING (ft) *	MAXIMUM MULLION SPAN (ft.)							
		(G) 4"x6"x1/4" MULLION				(I) 4"x8"x1/4" MULLION			
		ORIENTATION #1 (▭) ‡		ORIENTATION #2 (▯) ‡		ORIENTATION #1 (▭) ‡		ORIENTATION #2 (▯) ‡	
		END	INTERIOR	END	INTERIOR	END	INTERIOR	END	INTERIOR
30.0	8'-0"	12'-0"	12'-0"	12'-0"	12'-0"	12'-0"	12'-0"	12'-0"	12'-0"
35.0	8'-0"	12'-0"	12'-0"	12'-0"	12'-0"	12'-0"	12'-0"	12'-0"	12'-0"
40.0	8'-0"	12'-0"	12'-0"	11'-7"	12'-0"	12'-0"	12'-0"	12'-0"	12'-0"
45.0	8'-0"	12'-0"	11'-6"	10'-7"	12'-0"	12'-0"	12'-0"	11'-6"	12'-0"
50.0	8'-0"	11'-7"	11'-1"	9'-11"	12'-0"	12'-0"	12'-0"	10'-9"	12'-0"
55.0	8'-0"	10'-9"	10'-9"	9'-4"	12'-0"	12'-0"	11'-8"	10'-2"	12'-0"
60.0	8'-0"	10'-1"	10'-5"	8'-11"	12'-0"	11'-11"	11'-4"	9'-8"	12'-0"
63.3	8'-0"	9'-9"	10'-3"	8'-8"	12'-0"	11'-6"	11'-2"	9'-5"	12'-0"
65.0	8'-0"	9'-7"	10'-2"	8'-7"	12'-0"	11'-3"	11'-1"	9'-4"	12'-0"
70.0	8'-0"	9'-1"	9'-11"	8'-3"	12'-0"	10'-9"	10'-10"	7'-1"	12'-0"
75.0	8'-0"	8'-8"	9'-8"	8'-0"	12'-0"	10'-3"	10'-7"	6'-6"	12'-0"
80.0	7'-11"	8'-5"	9'-6"	7'-10"	11'-10"	10'-0"	10'-4"	6'-1"	12'-0"
85.0	7'-5"	8'-10"	9'-7"	8'-2"	11'-10"	10'-5"	10'-5"	6'-9"	12'-0"
90.0	7'-0"	9'-2"	9'-7"	8'-6"	11'-10"	10'-10"	10'-5"	7'-6"	12'-0"
92.0	6'-6"	10'-2"	9'-9"	9'-4"	12'-0"	12'-0"	10'-7"	10'-2"	12'-0"

(VALID ONLY FOR SHUTTERS WITHOUT STORM BARS & HEADERS)

TEXAS DEPARTMENT OF INSURANCE – 2006

WALTER A. TILLIT, JR.
LICENSED PROFESSIONAL ENGINEER
P.E. SEAL/SIGNATURE/DATE

WALTER A. TILLIT Jr. P.E.
PROFESSIONAL ENGINEER
6355 N.W. 36TH. ST., STE. 305
VIRGINIA GARDENS, FL 33166
PHONE : (305) 871-1530 , FAX : (305) 871-1531
TEXAS LIC. # 90691
FIRM REGISTRATION # F-13790

heroal RS 53 RC 3 SLAT ENGAGED ROLL-UP SHUTTER

heroal-Johann Henkenjohann GmbH & Co. KG
Osterwieher Str. 80
33415 Verl.

REV. NO	DESCRIPTION	DATE	REV. No	DESCRIPTION	DATE
1			3		
2			4		

DRAWN BY: L.C.
DATE: 11/06/17
DRAWING No. 17-287
SHEET 16 OF 27

SCHEDULE 1c
FLOOR TO CEILING (TRAPPED) MOUNTING
MAX. SPAN (ft.) FOR END AND INTERIOR MULLION FOR A GIVEN DESIGN LOAD (p.s.f.) AND A 6'-0" MAX. MULLION SPACING (ft.) *
VALID ONLY FOR INSTALLATIONS INTO CONCRETE

MAX. DESIGN PRESSURE RATING (p.s.f.)	MAXIMUM MULLION SPACING (ft) *	MAXIMUM MULLION SPAN (ft.)							
		(G) 4"x6"x1/4" MULLION				(I) 4"x8"x1/4" MULLION			
		ORIENTATION #1 (▭) ‡		ORIENTATION #2 (▯) ‡		ORIENTATION #1 (▭) ‡		ORIENTATION #2 (▯) ‡	
		END	INTERIOR	END	INTERIOR	END	INTERIOR	END	INTERIOR
30.0	6'-0"	12'-0"	12'-0"	12'-0"	12'-0"	12'-0"	12'-0"	12'-0"	12'-0"
35.0	6'-0"	12'-0"	12'-0"	12'-0"	12'-0"	12'-0"	12'-0"	12'-0"	12'-0"
40.0	6'-0"	12'-0"	12'-0"	12'-0"	12'-0"	12'-0"	12'-0"	12'-0"	12'-0"
45.0	6'-0"	12'-0"	12'-0"	12'-0"	12'-0"	12'-0"	12'-0"	12'-0"	12'-0"
50.0	6'-0"	12'-0"	12'-0"	12'-0"	12'-0"	12'-0"	12'-0"	12'-0"	12'-0"
55.0	6'-0"	12'-0"	11'-10"	12'-0"	12'-0"	12'-0"	12'-0"	12'-0"	12'-0"
60.0	6'-0"	12'-0"	11'-6"	12'-0"	12'-0"	12'-0"	12'-0"	12'-0"	12'-0"
63.3	6'-0"	12'-0"	11'-4"	12'-0"	12'-0"	12'-0"	12'-0"	12'-0"	12'-0"
65.0	6'-0"	12'-0"	11'-2"	12'-0"	12'-0"	12'-0"	12'-0"	12'-0"	12'-0"
70.0	6'-0"	12'-0"	10'-11"	12'-0"	12'-0"	12'-0"	11'-11"	12'-0"	12'-0"
75.0	6'-0"	12'-0"	10'-8"	12'-0"	12'-0"	12'-0"	11'-7"	12'-0"	12'-0"
80.0	6'-0"	12'-0"	10'-5"	12'-0"	11'-9"	12'-0"	11'-4"	12'-0"	12'-0"
85.0	6'-0"	12'-0"	10'-3"	12'-0"	11'-1"	12'-0"	11'-2"	12'-0"	12'-0"
90.0	6'-0"	12'-0"	10'-1"	11'-7"	10'-6"	12'-0"	10'-11"	12'-0"	12'-0"
92.0	6'-0"	12'-0"	10'-0"	11'-4"	10'-3"	12'-0"	10'-10"	12'-0"	12'-0"

SCHEDULE 2c
WALL MOUNTING
MAX. SPAN (ft.) FOR END AND INTERIOR MULLION FOR A GIVEN DESIGN LOAD (p.s.f.) AND A 6'-0" MAX. MULLION SPACING (ft.) *
VALID ONLY FOR INSTALLATIONS INTO CONCRETE

MAX. DESIGN PRESSURE RATING (p.s.f.)	MAXIMUM MULLION SPACING (ft) *	MAXIMUM MULLION SPAN (ft.)							
		(G) 4"x6"x1/4" MULLION				(I) 4"x8"x1/4" MULLION			
		ORIENTATION #1 (▭) ‡		ORIENTATION #2 (▯) ‡		ORIENTATION #1 (▭) ‡		ORIENTATION #2 (▯) ‡	
		END	INTERIOR	END	INTERIOR	END	INTERIOR	END	INTERIOR
30.0	6'-0"	12'-0"	12'-0"	12'-0"	12'-0"	12'-0"	12'-0"	12'-0"	12'-0"
35.0	6'-0"	12'-0"	12'-0"	12'-0"	12'-0"	12'-0"	12'-0"	12'-0"	12'-0"
40.0	6'-0"	12'-0"	12'-0"	12'-0"	12'-0"	12'-0"	12'-0"	12'-0"	12'-0"
45.0	6'-0"	12'-0"	12'-0"	12'-0"	12'-0"	12'-0"	12'-0"	12'-0"	12'-0"
50.0	6'-0"	12'-0"	12'-0"	12'-0"	12'-0"	12'-0"	12'-0"	12'-0"	12'-0"
55.0	6'-0"	12'-0"	11'-10"	12'-0"	12'-0"	12'-0"	12'-0"	12'-0"	12'-0"
60.0	6'-0"	12'-0"	11'-6"	12'-0"	12'-0"	12'-0"	12'-0"	12'-0"	12'-0"
63.3	6'-0"	12'-0"	11'-4"	12'-0"	12'-0"	12'-0"	12'-0"	12'-0"	12'-0"
65.0	6'-0"	12'-0"	11'-2"	12'-0"	12'-0"	12'-0"	12'-0"	12'-0"	12'-0"
70.0	6'-0"	12'-0"	10'-11"	12'-0"	12'-0"	12'-0"	11'-11"	12'-0"	12'-0"
75.0	6'-0"	12'-0"	10'-8"	12'-0"	12'-0"	12'-0"	11'-7"	12'-0"	12'-0"
80.0	6'-0"	12'-0"	10'-5"	12'-0"	12'-0"	12'-0"	11'-4"	12'-0"	12'-0"
85.0	6'-0"	12'-0"	10'-3"	12'-0"	12'-0"	12'-0"	11'-2"	12'-0"	12'-0"
90.0	6'-0"	11'-7"	10'-1"	11'-7"	12'-0"	12'-0"	10'-11"	12'-0"	12'-0"
92.0	6'-0"	11'-4"	10'-0"	11'-4"	12'-0"	12'-0"	10'-10"	12'-0"	12'-0"

(VALID ONLY FOR SHUTTERS WITHOUT STORM BARS & HEADERS)

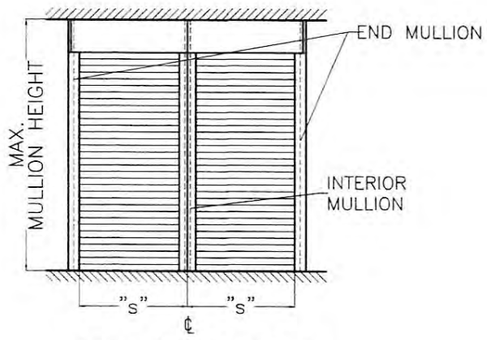

MULLION SPACING: "s"

* MAXIMUM MULLION SPACING SHALL BE SUCH THAT MAX SLAT SPAN FOR THAT DESIGN LOAD SHALL NOT BE EXCEEDED.

‡ MULLION ORIENTATION IS AS SEEN FROM THE OUTSIDE (EXTERIOR) OF SHUTTER.

STATE OF TEXAS
WALTER A. TILLIT, JR.
LICENSED
PROFESSIONAL ENGINEER
P.E. SEAL/SIGNATURE/DATE

WALTER A. TILLIT Jr. P.E.
PROFESSIONAL ENGINEER
6355 N.W. 36TH. ST., STE. 305
VIRGINIA GARDENS, FL 33166
PHONE : (305) 871-1530 , FAX : (305) 871-1531
TEXAS LIC. # 90691
FIRM REGISTRATION # F-13790

TEXAS DEPARTMENT OF INSURANCE – 2006

heroal RS 53 RC 3 SLAT ENGAGED ROLL-UP SHUTTER

heroal-Johann Henkenjohann GmbH & Co. KG
Osterwieher Str. 80
33415 Verl.

REV. NO	DESCRIPTION	DATE	REV. No	DESCRIPTION	DATE
1			3		
2			4		

DRAWN BY: L.C.
DATE: 11/06/17
DRAWING No. 17-287
SHEET 17 OF 27

SLAT PERFORMANCE CHART Ib:

FOR A GIVEN DESIGN PRESSURE RATING (p.s.f.) AND PRODUCT MOUNT CONDITION PER DETAIL 1 BELOW

(VALID ONLY FOR SHUTTERS WITHOUT STORM BARS & HEADERS)

CHART Ib: (ONLY VALID FOR 3/16" SLIP)

USE MAXIMUM VALUE BETWEEN POSITIVE AND NEGATIVE LOAD

MAXIMUM DESIGN PRESSURE RATING (p.s.f.)	MAX. SLAT SPAN "$L_{MAX.}$" (ft)								
	WALL MOUNT (SEE NOTES Δ)			TRAPPED MOUNT (SEE NOTES Δ)			BUILD-OUT MOUNT (E) (SEE NOTES Δ)		
	G=0.55 *	G=0.46 *	G=0.36 *	G=0.55 *	G=0.46 *	G=0.36 *	G=0.55 *	G=0.46 *	G=0.36 *
30.0	10'-0"	10'-0"	10'-0"	10'-0"	10'-0"	10'-0"	10'-0"	10'-0"	9'-10"
35.0	10'-0"	10'-0"	9'-6"	10'-0"	10'-0"	10'-0"	10'-0"	9'-4"	8'-8"
40.0	10'-0"	9'-6"	9'-0"	10'-0"	10'-0"	10'-0"	9'-3"	8'-9"	8'-2"
45.0	9'-5"	9'-0"	8'-6"	10'-0"	10'-0"	9'-6"	8'-10"	8'-4"	7'-9"
50.0	8'-11"	8'-7"	8'-1"	10'-0"	10'-0"	9'-0"	8'-5"	7'-11"	7'-5"
55.0	8'-6"	8'-2"	7'-9"	10'-0"	10'-0"	8'-6"	8'-0"	7'-8"	7'-2"
60.0	8'-2"	7'-10"	7'-6"	10'-0"	9'-0"	8'-0"	7'-8"	7'-4"	6'-11"
63.3	8'-0"	7'-8"	7'-4"	10'-0"	9'-6"	7'-10"	7'-6"	7'-2"	6'-9"

REQUIRED MIN. SEPARATION TO GLASS MESURED TO BACK OF SLAT .(in)			
WIND ZONES 1-3		WIND ZONE 4	
SLAT SPAN	MIN. SEP. TO GLASS	SLAT SPAN	MIN. SEP. TO GLASS
>6'-6" TO 10'-0"	1"	>6'-6" TO 10'-0"	5 1/2"
6'-6" OR LESS	1"	6'-6" OR LESS	4 5/8"

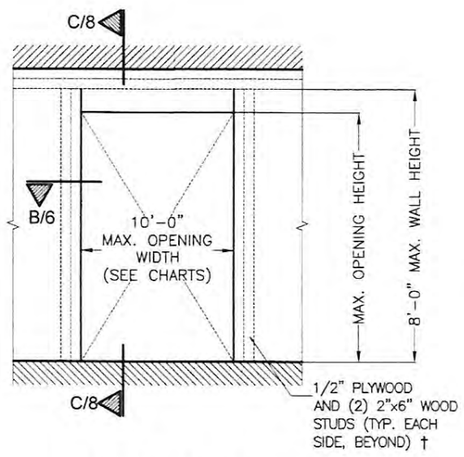

DETAIL 1 (ELEVATION)

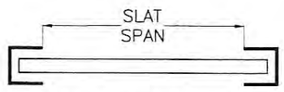

SLAT SPAN DEFINITION

*: G=0.55, APPLICABLE TO SOUTHERN YELLOW PINE #2 WOOD GRADE
G=0.46, APPLICABLE TO DOUGLAS FIR-SOUTH WOOD GRADE
G=0.36, APPLICABLE TO SPRUCE PINE-FIR SOUTH WOOD GRADE

Δ NOTES:

1. ABOVE INDICATED MAX. SLAT SPANS MAY BE USED AS LONG AS ANCHOR SPACING SCHEDULES ON SHEET 19 INDICATE THAT A SPACING IS AVAILABLE FOR THE CORRESPONDING SLAT SPAN AND DESIGN PRESSURE RATING.

†: WOOD FRAME WALL TO BE BUILT STRICTLY IN ACCORDANCE WITH SPECS GIVEN ON DETAIL 1 AND PROVISIONS FROM CHAPTER 23 OF THE INTERNATIONAL BUILDING CODE. MIN. WALL LENGTH AT EITHER SIDE OF OPENING MUST BE 33 INCHES.

2. INSTALLATIONS VALID ONLY FOR PRODUCT WITHOUT MULLIONS

INSTALLATIONS INTO WOOD FRAME STRUCTURES

TEXAS DEPARTMENT OF INSURANCE - 2006

WALTER A. TILLIT, JR. 90691 LICENSED PROFESSIONAL ENGINEER TEXAS

P.E. SEAL/SIGNATURE/DATE

WALTER A. TILLIT Jr. P.E.
PROFESSIONAL ENGINEER
6355 N.W. 36TH. ST., STE. 305
VIRGINIA GARDENS, FL. 33166
PHONE : (305) 871-1530 , FAX : (305) 871-1531
TEXAS LIC. # 90691
FIRM REGISTRATION # F-13790

heroal RS 53 RC 3 SLAT ENGAGED ROLL-UP SHUTTER

heroal-Johann Henkenjohann GmbH & Co. KG
Osterwieher Str. 80
33415 Verl.

REV. NO	DESCRIPTION	DATE	REV. No	DESCRIPTION	DATE
1			3		
2			4		

DRAWN BY: L.C.
DATE: 11/06/17
DRAWING No. 17-287
SHEET 18 OF 27

MAX. ANCHOR'S SPACING SCHEDULE VI FOR A GIVEN PRODUCT MOUNTING TYPE W/ 5/16"ø ITW BUILDEX TAPCON XL ANCHORS TO WOOD GRADE, DESIGN PRESSURE RATING (psf) AND SLAT SPAN RANGE *

(VALID ONLY FOR SHUTTERS WITHOUT STORM BARS & HEADERS)

WALL MOUNT
TO 2"x6" WOOD STUD WITH MINIMUM 1/2" PLYWOOD

(SEE DETAIL 1 ON SHEET 18)

WOOD GRADE	MAX. DESIGN PRESSURE RATING RANGE	SLAT SPAN RANGE					
		0' to 4' *	> 4' to 5' *	> 5' to 6' *	> 6' to 7' *	> 7' to 9' *	> 9' to 10' *
SOUTHERN PINE #2 (G=0.55)	30.0	4"	4"	4"	4"	4"	4"
	40.0	4"	4"	4"	4"	4"	3"
	50.0	4"	4"	4"	4"	3"	–
	60.0	4"	4"	4"	4"	–	–
	63.3	4"	4"	4"	4"	–	–
DOUGLAS-FIR-SOUTH (G=0.46)	30.0	4"	4"	4"	4"	4"	3 3/4"
	40.0	4"	4"	4"	4"	3"	–
SPRUCE PINE-FIR-SOUTH (G=0.36)	≤30.0	4"	4"	4"	4"	4"	3 1/4"

TRAPPED MOUNT
TO 2"x6" WOOD STUD WITH MINIMUM 1/2" PLYWOOD

(SEE DETAIL 1 ON SHEET 18)

WOOD GRADE	SLAT SPAN RANGE						
	DESIGN PRESSURE RATIING RANGE (p.s.f.)	0' to 4' *	> 4' to 5' *	> 5' to 6' *	> 6' to 7' *	> 7' to 9' *	> 9' to 10' *
SOUTHERN PINE #2 (G=0.55)	≤ 30.0	4"	4"	4"	4"	4"	4"
	40	4"	4"	4"	4"	4"	4"
	50	4"	4"	4"	4"	4"	4"
	60	4"	4"	4"	4"	4"	3 3/4"
	63.3	4"	4"	4"	4"	4"	3 1/2"
DOUGLAS-FIR-SOUTH (G=0.46)	≤ 30.0	4"	4"	4"	4"	4"	4"
	40	4"	4"	4"	4"	4"	4"
SPRUCE PINE-FIR-SOUTH (G=0.36)	≤ 30.0	4"	4"	4"	4"	4"	4"

BUILD-OUT MOUNT
TO 2"x6" WOOD STUD WITH MINIMUM 1/2" PLYWOOD

(SEE DETAIL 1 ON SHEET 18)

WOOD GRADE	SLAT SPAN RANGE						
	DESIGN PRESSURE RATIING RANGE (p.s.f.)	0' to 4' * BUILD-OUT MOUNT W/ (E)	> 4' to 5' * BUILD-OUT MOUNT W/ (E)	> 5' to 6' * BUILD-OUT MOUNT W/ (E)	> 6' to 7' * BUILD-OUT MOUNT W/ (E)	> 7' to 9' * BUILD-OUT MOUNT W/ (E)	> 9' to 10' * BUILD-OUT MOUNT W/ (E)
SOUTHERN PINE #2 (G=0.55)	≤ 30.0	4"	4"	4"	4"	4"	3 1/2"
	40	4"	4"	4"	4"	3 1/4"	–
	50	4"	4"	4"	4"	–	–
	60	4"	4"	4"	4"	–	–
	63.3	4"	4"	4"	4"	–	–
DOUGLAS-FIR-SOUTH (G=0.46)	≤ 30.0	4"	4"	4"	4"	4"	3"
	40	4"	4"	4"	4"	–	–
SPRUCE PINE-FIR-SOUTH (G=0.36)	≤ 30.0	4"	4"	4"	4"	3 1/4"	–

* NOTE:
MAX. SPAN FOR SLAT FOR A GIVEN DESIGN PRESSURE RATING SHALL **NEVER** EXCEED MAX. SLAT SPAN INDICATED ON SLAT PERFORMANCE CHARTS ON SHEET 18.

STATE OF TEXAS
WALTER A. TILLIT, JR.
90691
LICENSED
PROFESSIONAL ENGINEER
11/19/17

P.E. SEAL/SIGNATURE/DATE

WALTER A. TILLIT Jr. P.E.
PROFESSIONAL ENGINEER
6355 N.W. 36TH. ST., STE. 305
VIRGINIA GARDENS, FL. 33166
PHONE : (305) 871-1530 , FAX : (305) 871-1531
TEXAS LIC. # 90691
FIRM REGISTRATION # F-13790

TEXAS DEPARTMENT OF INSURANCE – 2006

heroal RS 53 RC 3 SLAT ENGAGED ROLL-UP SHUTTER

heroal-Johann Henkenjohann GmbH & Co. KG
Osterwieher Str. 80
33415 Verl.

REV. NO	DESCRIPTION	DATE	REV. No	DESCRIPTION	DATE
1			3		
2			4		

DRAWN BY: L.C.
DATE: 11/06/17
DRAWING No. 17-287
SHEET 19 OF 27

GENERAL NOTES: VALID FOR SHUTTERS WITH STORM BARS AND HEADERS: SHEETS 3, 13, 20 THRU 27

1. ROLL-UP SHUTTER SHOWN ON THIS PRODUCT EVALUATION DOCUMENT (P.E.D.) HAS BEEN VERIFIED FOR COMPLIANCE IN ACCORDANCE WITH THE 2006 EDITIONS OF THE INTERNATIONAL BUILDING CODE (I.B.C.) AND INTERNATIONAL RESIDENTIAL CODE, (I.R.C.) WITH THE 2006 TEXAS REVISIONS EFFECTIVE JANUARY 1, 2008.

   THIS PRODUCT SHALL BE INSTALLED AT SEAWARD AND INLAND AREAS, AS DEFINED BY THE TEXAS DEPARTMENT OF INSURANCE. DESIGN WIND LOADS SHALL BE DETERMINED AS PER SECTION 1609 OF THE OF THE INTERNATIONAL BUILDING CODE, FOR A BASIC WIND SPEED AS REQUIRED BY THE JURISDICTION WHERE SHUTTER WILL BE INSTALLED, AND FOR A DIRECTIONALITY FACTOR Kd=0.85, IN ACCORDANCE W/ ASCE 7-05 STANDARD IN ORDER TO VERIFY THAT COMPONENTS AND ANCHORS ON THIS P.E.D. AS TESTED WERE NOT OVER STRESSED, A 33% INCREASE IN ALLOWABLE STRESS FOR WIND LOADS WAS NOT USED IN THEIR ANALYSIS. FASTENERS SPACING TO WOOD HAS BEEN DETERMINED IN ACCORDANCE WITH N.D.S. 2005.

   ROLL-UP SHUTTER'S ADEQUACY FOR IMPACT AND CYCLIC RESISTANCE HAS BEEN VERIFIED IN ACCORDANCE WITH SECTION 1609.1.2 & R301.1.3 OF THE ABOVE MENTIONED CODES AS PER FENESTRATION TESTING LAB. REPORT # 9654 AS PER FLORIDA PROTOCOLS TAS 201, 202 & 203, QUALIFYING INSTALLATIONS FOR WIND ZONES 1, 2, 3 & 4, MISSILE TYPE E, APPLICABLE TO BASIC PROTECTION ONLY, INSTALLATIONS AT NON ESSENTIAL FACILITIES AS DEFINED BY SECTIONS 6.2.1.1, 6.2.1.2 AND 8.3 OF ASTM E 1996 SEE SCHEDULES ON SHEET 27 FOR ADDITIONAL LIMITATIONS, AND AS PER STRUCTURAL CALCULATION PERFORMED IN ACCORDANCE W/ SECTION 1604 OF THE INTERNATIONAL BUILDING CODE.

2. ALL ALUMINUM EXTRUSIONS SHALL BE AS INDICATED ON SHEET 21.

3. EVERY OTHER SLAT SHALL INCLUDE WIND LOCKS AT EACH END (SEE COMPONENTS SHEET). EVERY SLAT (A) ADJACENT AND ABOVE BOTTOM SLAT (A1) MUST INCLUDE WIND LOCKS.

4. ALL SCREWS & BOLTS (EXCEPT COMPONENT (C3))INSTALLED AT SEAWARD AREAS TO BE STAINLESS STEEL 304 OR 316 AISI SERIES AND MEET ASTM A167, OR HOT DIPPED GALVANIZED (AFTER FABRICATION) CARBON STEEL AS PER ASTM A123 OR ASTM A153, OR HOT DIPPED GALVANIZED OR GALVANNEALED (PRIOR TO FABRICATION) AND MEET ASTM A653 WITH 50 KSI YIELD STRENGTH AND 90 KSI TENSILE STRENGTH, PER 2006 TEXAS REVISIONS TO THE 2006 I.B.C. AND THE 2006 I.R.C.
   ALL SCREWS & BOLTS (EXCEPT COMPONENT (C3)) INSTALLED AT INLAND I AREAS TO BE STAINLESS STEEL 304 OR 316 AISI SERIES AND MEET ASTM A167, OR HOT DIPPED GALVANIZED (AFTER FABRICATION) CARBON STEEL AS PER ASTM A123 OR ASTM A153, OR HOT DIPPED GALVANIZED OR GALVANNEALED (PRIOR TO FABRICATION) AND MEET ASTM A653; HOT DIP GALVANIZED OR ELECTRO GALVANIZED PER ASTM A641, MECHANICALLY DEPOSITED ZINC COATINGS PER ASTM B695 OR ELECTRO DEPOSITED ZINC COATINGS PER ASTM B633, PER THE 2006 TEXAS REVISIONS TO THE 2006 I.B.C. AND TO THE 2006 I.R.C.

5. STORM BARS MAY BE REMOVABLE AT NON HURRICANE CONDITIONS. HOWEVER, EACH STORM BAR SHALL BEAR A PERMANENT LABEL IN A VISIBLE PLACE WITH A WARNING NOTE INSTRUCTING THE TENANT OR OWNER THAT STORM BARS MUST BE INSTALLED WITH CORRESPONDING HARDWARE DURING PERIODS OF HURRICANE WARNING AND THAT ROLL UP SHUTTERS WILL NOT OFFER HURRICANE PROTECTION UNLESS ALL STORM BAR ARE INSTALLED AS DIRECTED.

   REMOVABLE STORM BARS SHALL BE STORED IN A CONSPICUOUS PLACE WITH EASY AND IMMEDIATE ACCESS SO THAT THEY CAN BE REACHED AND INSTALLED ANY TIME (HURRICANE CONDITIONS OR NOT) SLATS ARE ROLLED DOWN. THE EFFECT OF THE SLATS ROLLED DOWN WITHOUT STORM BARS IS; THOSE SLATS WILL SLIP OUT OF TRACK DUE TO THE DEFLECTION CAUSED BY WIND FORCES. WHEN REMOVING STORM BARS, ONE STORM BAR SHALL ALWAYS BE LEFT INSTALLED (SHALL NOT BE REMOVED). THIS CONDITION IS ONLY REQUIRED FOR HEADER SPANS EQUAL OR GREATER THAN 12'-0".

6. ANCHORS TO WALL FOR (B1) SIDE RAIL SHALL BE AS FOLLOWS: (UNLESS OTHERWISE NOTED)

   (A) TO EXISTING POURED CONCRETE: MIN. f'c = 2899 p.s.i. COMPRESSIVE STRENGTH.

   -5/16"ø CARBON STEEL TAPCON XL ANCHORS AS MANUFACTURED BY ITW BUILDEX, INC.

   A.1) MINIMUM EMBEDMENT OF 5/16" TAPCON XL ANCHORS INTO POURED CONCRETE SHALL BE 2 1/4". NO EMBEDMENT INTO STUCCO SHALL BE CONSIDERED AS PART OF THE REQUIRED EMBEDMENT.

   A.2) MINIMUM EDGE DISTANCE (E.D.) OF TAPCON XL ANCHORS INTO POURED CONCRETE SHALL BE 4". EDGE DISTANCE IS BEYOND ANY FINISH MATERIAL.

   A.3) IN CASE THAT PRECAST STONE, PRECAST CONCRETE OR BRICK PANELS, VENEER OR PAVERS BE FOUND ON THE EXISTING WALL, ANCHORS SHALL BE LONG ENOUGH TO REACH THE MAIN SUBSTRATE BEHIND SUCH PANELS. MINIMUM EMBEDMENT SHALL BE AS INDICATED ON NOTE A.1 ABOVE.

   (B) TO EXISTING GROUT FILLED CELL, CONCRETE BLOCK WALL: ASTM C-90

   -5/16"ø CARBON STEEL TAPCON XL ANCHORS, AS MANUFACTURED BY ITW BUILDEX, INC.

   B.1) MINIMUM EMBEDMENT OF 5/16" TAPCON XL ANCHORS, INTO GROUT FILLED CELL CONCRETE BLOCK UNIT SHALL BE 2 1/4".
   NO EMBEDMENT INTO STUCCO SHALL BE CONSIDERED AS PART OF THE REQUIRED EMBEDMENT.

   B.2) MINIMUM EDGE DISTANCE (E.D.) OF 5/16" TAPCON XL ANCHORS INTO GROUT FILLED CELL CONCRETE BLOCK SHALL BE 4". EDGE DISTANCE IS BEYOND ANY FINISH MATERIAL.

   B.3) IN CASE THAT PRECAST STONE, PRECAST CONCRETE OR BRICK PANELS, VENEER OR PAVERS BE FOUND ON THE EXISTING WALL, ANCHORS SHALL BE LONG ENOUGH TO REACH THE MAIN SUBSTRATE BEHIND SUCH PANELS. MINIMUM EMBEDMENT SHALL BE AS INDICATED ON NOTE B.1 ABOVE.

   (C) TO EXISTING WOOD FRAME BUILDING: SOUTHERN PINE #2 W/ G = 0.55 MIN., DOUGLAS FIR-SOUTH (G=0.46) OR SPRUCE PINE-FIR SOUTH, (G=0.36).

   -5/16"ø CARBON STEEL ULTRACON ANCHORS, AS MANUFACTURED BY ELCO CONSTRUCTION PRODUCTS, INC.

   C.1) MINIMUM PENETRATION OF ULTRACON ANCHORS, INTO THE WOOD FRAME UNIT SHALL BE 2 1/2". (MUST INCLUDE 2" THREADED LENGTH) NO PENETRATION INTO STUCCO SHALL BE CONSIDERED AS PART OF THE REQUIRED PENETRATION.

   C.2) MINIMUM EDGE DISTANCE (E.D.) OF ULTRACON ANCHORS, INTO WOOD SHALL BE 2". EDGE DISTANCE IS BEYOND ANY FINISH MATERIAL.

   C.3) IN CASE THAT PRECAST STONE, PRECAST CONCRETE OR BRICK PANELS, VENEER OR PAVERS BE FOUND ON THE EXISTING WALL, ANCHORS SHALL BE LONG ENOUGH TO REACH THE MAIN SUBSTRATE BEHIND SUCH PANELS. MINIMUM THREADED PENETRATION SHALL BE AS INDICATED ON NOTE C.1 ABOVE.

7. ANCHORS SHALL BE INSTALLED FOLLOWING ALL OF THE RECOMMENDATIONS AND SPECIFICATIONS OF THE ANCHOR'S MANUFACTURER.

8. ANCHORS REQUIRED FOR STORM BARS & HEADERS CONNECTIONS SHALL BE AS SPECIFIED ON APPLICABLE SECTIONS OR DETAILS SHOWN ON SHEETS 24, 25 & 26 RESPECTIVELY.

   -1/4"ø SOLID SET ANCHOR TO BE AS DISTRIBUTED BY ALL POINTS SPECIALTY INC. 3/8 ø KWIK BOLT 3 S.S ANCHOR TO BE AS MANUFACTURED BY HILTI INC.

   MINIMUM EDGE DISTANCE AND SPACING FOR ABOVE MENTIONED ANCHORS SHALL BE AS INDICATED BELOW OR AT ABOVE MENTIONED SHEET. EDGE DISTANCE AND EMBEDMENTS ARE BEYOND ANY FINISH MATERIAL.

ANCHOR	SPACING @ 100%	EDGE DISTANCE @ 100%	EMBEDMENT CONCRETE	EMBEDMENT GROUT FILLED OR CONCRETE BLOCK
1/4" SOLID SET	3"	3"	3/4" (3000 psi)	-
3/8" KWIK BOLT 3	4 1/2"	5"	3 1/2" (3000 psi)	3 1/2"

9. ROLL-UP SHUTTER SLATS FOAM PLASTIC CORE SHALL CONSIST OF HIGH DENSITY ELASTOLID D 8220/109 POLYOLKOMPONENT 0.021676 Lb/in³ FOAM PLASTIC CORE.
   SLATS FOAM PLASTIC CORE SURFACE BURNING CHARACTERISTICS HAVE BEEN VERIFIED IN ACCORDANCE WITH SECTION 2603.3 OF THE INTERNATIONAL BUILDING CODE AS PER INTERTEK TEST REPORTS # 102498030SAT_001A & 102484409MID_001 RESPECTIVELY.

10. THE INSTALLATION CONTRACTOR IS TO SEAL/CAULK ALL SHUTTER COMPONENT EDGES WHICH REMAIN IN CONTINUOUS CONTACT WITH THE BUILDING TO PREVENT WIND/RAIN INTRUSION. CAULK AND SEAL SHUTTER TRACKS ALL AROUND FULL LENGTH.

11. IT SHALL BE THE RESPONSIBILITY OF THE CONTRACTOR TO VERIFY THE SOUNDNESS OF THE STRUCTURE WHERE SHUTTER IS TO BE ATTACHED TO INSURE PROPER ANCHORAGE. THIS SHUTTER SHALL ONLY BE ATTACHED TO CONCRETE OR GROUT FILLED CELL CONCRETE BLOCK. AS SHOWN ON SHEETS 24, 25 & 26

12. ROLL-UP SHUTTERS INSTALLATION SHALL COMPLY WITH SPECS INDICATED IN THIS DRAWING PLUS ANY BUILDING AND ZONING REGULATIONS PROVIDED BY THE JURISDICTION WHERE PERMIT IS APPLIED TO.

13. ROLL-UP MECHANISM NOT PART OF THIS APPROVAL.

14. (a) THIS P.E.D. PREPARED BY THIS ENGINEER IS GENERIC AND DOES NOT PROVIDE INFORMATION FOR A SITE SPECIFIC PROJECT; i.e. WHERE THE SITE CONDITIONS DEVIATE FROM THE P.E.D.

    (b) CONTRACTOR TO BE RESPONSIBLE FOR THE SELECTION, PURCHASE AND INSTALLATION INCLUDING LIFE SAFETY OF THIS PRODUCT, BASED ON THIS P.E.D. PROVIDED HE/SHE DOES NOT DEVIATE FROM THE CONDITIONS DETAILED ON THIS DOCUMENT. CONSTRUCTION SAFETY AT SITE IS THE CONTRACTOR'S RESPONSIBILITY.

    (c) THIS P.E.D. WILL BE CONSIDERED INVALID IF ALTERED BY ANY MEANS.

    (d) SITE SPECIFIC PROJECTS SHALL BE PREPARED BY A PROFESSIONAL REGISTERED ENGINEER OR ARCHITECT WHICH WILL BECOME THE ENGINEER OF RECORD (E.O.R.) FOR THE PROJECT AND WHO WILL BE RESPONSIBLE FOR THE PROPER USE OF THE P.E.D. ENGINEER OF RECORD, ACTING AS A DELEGATED ENGINEER TO THE P.E.D. ENGINEER, SHALL SUBMIT TO THIS LATTER THE SITE SPECIFIC DRAWINGS FOR REVIEW.

    (e) THIS P.E.D. SHALL BEAR THE DATE AND ORIGINAL SEAL AND SIGNATURE OF THE PROFESSIONAL ENGINEER OF RECORD THAT PREPARED IT.

15. PRODUCT MANUFACTURE'S LABEL SHALL BE LOCATED ON A READILY VISIBLE LOCATION AT PRODUCT IN ACCORDANCE WITH TEXAS DEPARTMENT OF INSURANCE REQUIREMENTS. ONE LABEL SHALL BE PLACED FOR EVERY OPENING.

THIS DRAWING SHALL ONLY BE USED TO OBTAIN PERMITS UNDER THE TEXAS DEPARTMENT OF INSURANCE JURISDICTION

TEXAS DEPARTMENT OF INSURANCE - 2006

STATE OF TEXAS
WALTER A. TILLIT, JR.
90691
LICENSED PROFESSIONAL ENGINEER
11/9/17

P.E. SEAL/SIGNATURE/DATE

WALTER A. TILLIT Jr. P.E.
PROFESSIONAL ENGINEER
6355 N.W. 36TH ST., STE. 305
VIRGINA GARDENS, FL. 33166
PHONE : (305) 871-1530 , FAX : (305) 871-1531
TEXAS LIC. # 90691
FIRM REGISTRATION # F-13790

heroal RS 53 RC 3 SLAT ENGAGED ROLL-UP SHUTTER

heroal-Johann Henkenjohann GmbH & Co. KG
Osterwieher Str. 80
33415 Verl.

REV. NO	DESCRIPTION	DATE	REV. No	DESCRIPTION	DATE
1			3		
2			4		

DRAWN BY: L.C.
DATE: 11/06/17
DRAWING No. 17-287
SHEET 20 OF 27

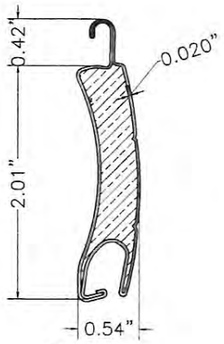

(A) SLAT:

heroal RS 53 RC 3 SLAT
53mm (t = .020")
HIGH DENSITY ELASTOLID D 8220/109
POLYOLKOMPONENTE
0.021676 Lb/in^3
FOAM PLASTIC CORE
SHEET METAL S.S SLAT
AISI 304 SERIES S.S (Fy=60.0 Ksi.)
(Fu=78.0 Ksi.)
SCALE: 3/4" = 1"

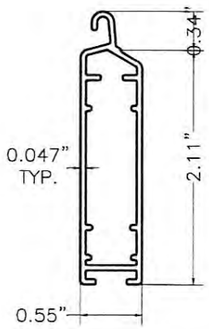

(A1) BOTTOM SLAT:

6060-T6 ALUMINUM ALLOY
SCALE: 3/4" = 1"

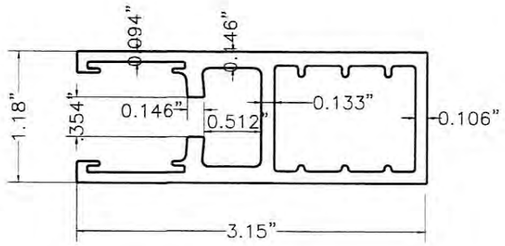

(B1) SIDE RAIL:

6060-T6 ALUMINUM ALLOY
SCALE: 3/4" = 1"

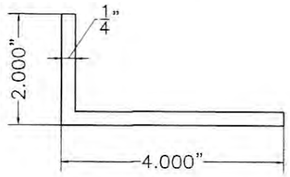

(Q) ANGLE FOR HEADER BAR 0"-6" LONG

6063-T6 ALUMINUM ALLOY
SCALE: 3/4" = 1"

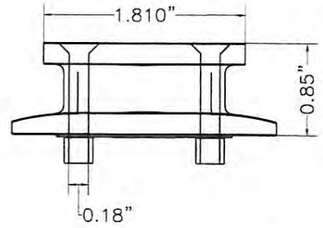

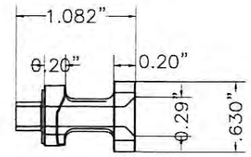

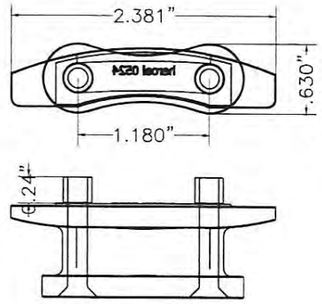

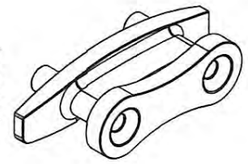

ISOMETRIC (C1)

(C1) WIND LOCK:

DURETHAN BC 40 SR2
SCALE: 3/4" = 1"

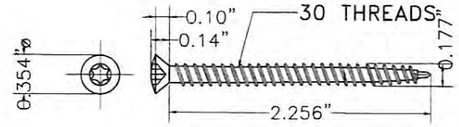

(C3) WIND LOCK SCREW:

(2) 2 3/8" 305 SERIES F.H. S.D.S.
(Min. Fy = 72.8 ksi, Min. Ftu = 83.1 ksi)
SCALE: 3/4" = 1"

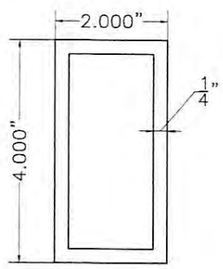

(L) STORM BAR

6061-T6 ALUMINUM ALLOY
SCALE: 3/4" = 1"

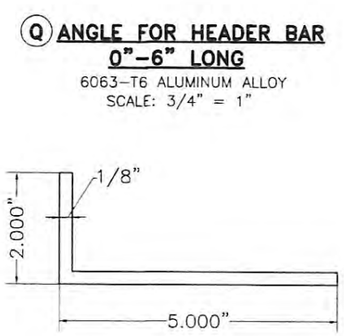

(Q1) CONTINUOUS AT BOTTOM OF SLAT

6063-T6 ALUMINUM ALLOY
SCALE: 3/4" = 1"

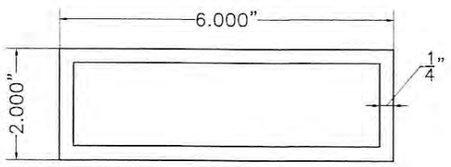

(O) HEADER

6061-T6 ALUMINUM ALLOY
SCALE: 3/4" = 1"

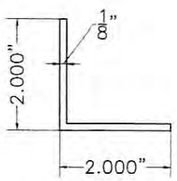

(P) ANGLE FOR STORM BAR 0"-4" LONG

6063-T6 ALUMINUM ALLOY
SCALE: 3/4" = 1"

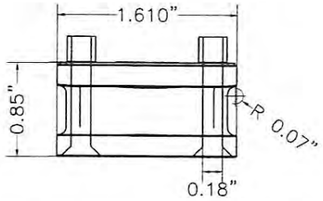

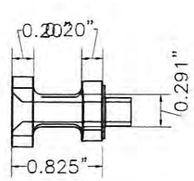

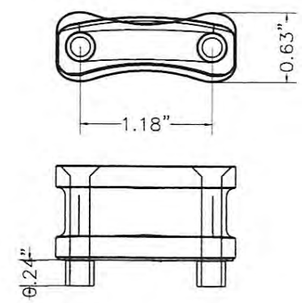

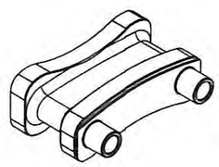

ISOMETRIC (C2)

(C2) WIND LOCK:

DURETHAN BC 40 SR2
SCALE: 3/4" = 1"

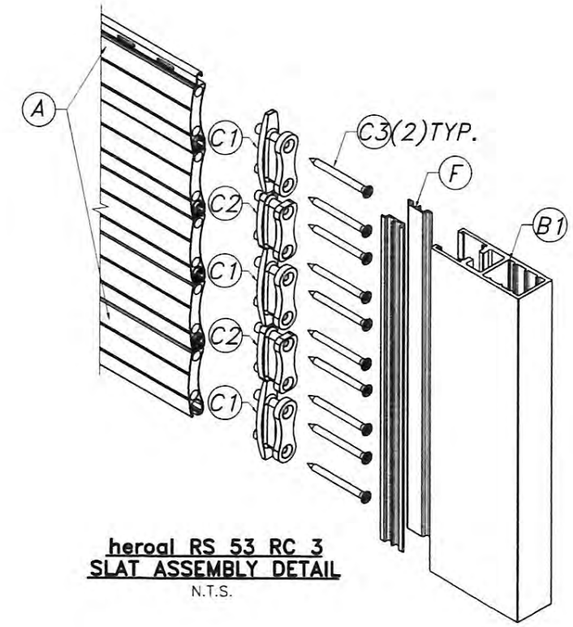

heroal RS 53 RC 3 SLAT ASSEMBLY DETAIL

N.T.S.

COMPONENTS

(VALID ONLY FOR SHUTTERS WITH STORM BARS & HEADERS)

TEXAS DEPARTMENT OF INSURANCE – 2006

STATE OF TEXAS
WALTER A. TILLIT, JR.
LICENSED
PROFESSIONAL ENGINEER

P.E. SEAL/SIGNATURE/DATE

WALTER A. TILLIT Jr. P.E.
PROFESSIONAL ENGINEER
6355 N.W. 36TH. ST., STE. 305
VIRGINIA GARDENS, FL 33166
PHONE : (305) 871-1530 , FAX : (305) 871-1531
TEXAS LIC. # 90691
FIRM REGISTRATION # F-13790

heroal RS 53 RC 3 SLAT ENGAGED ROLL-UP SHUTTER

heroal-Johann Henkenjohann GmbH & Co. KG
Osterwieher Str. 80
33415 Verl.

REV. NO	DESCRIPTION	DATE	REV. No	DESCRIPTION	DATE
1			3		
2			4		

DRAWN BY: L.C.
DATE: 11/06/17
DRAWING No. 17-287
SHEET 21 OF 27

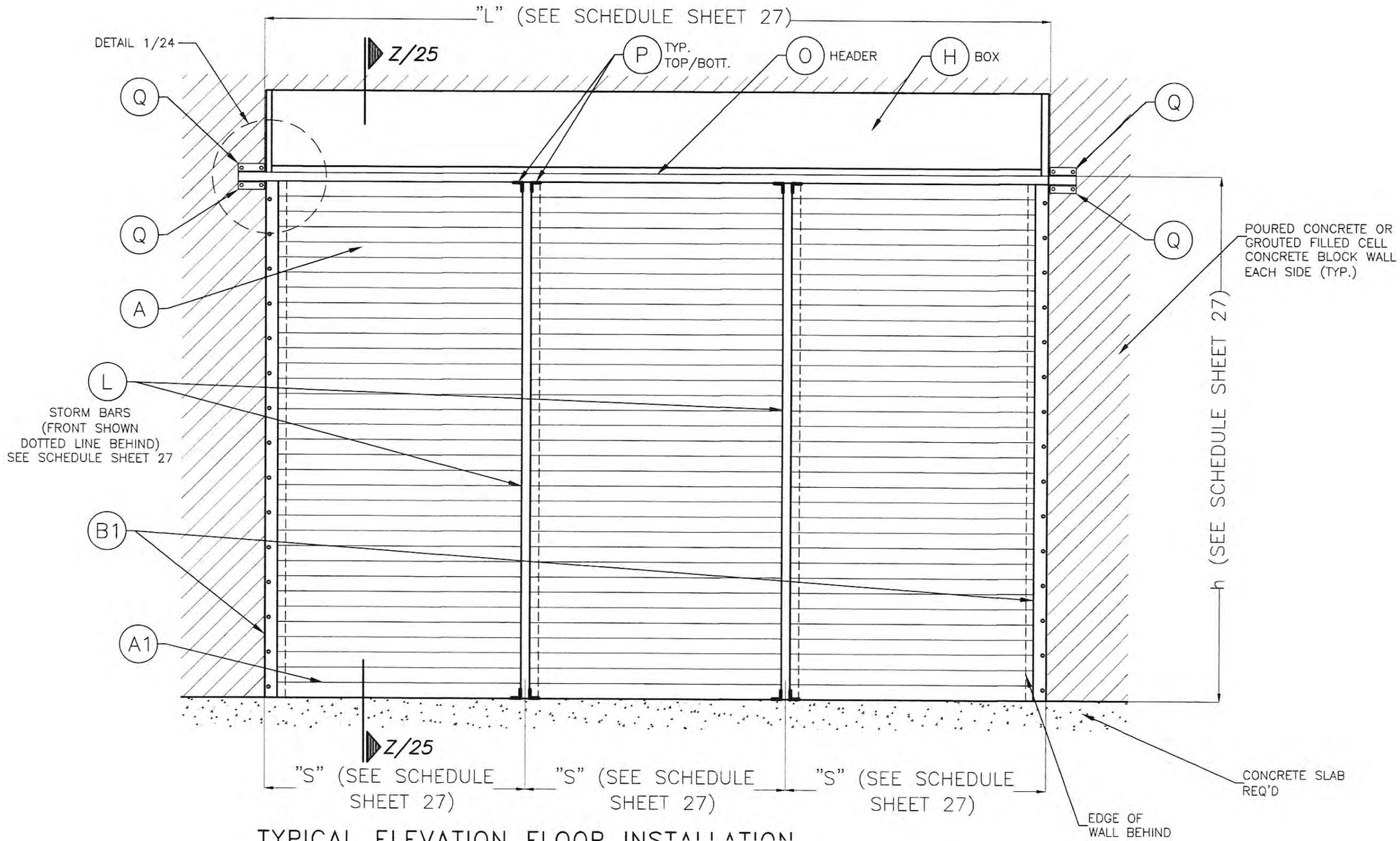

TYPICAL ELEVATION FLOOR INSTALLATION

(VALID ONLY FOR SHUTTERS WITH STORM BARS & HEADERS)

STATE OF TEXAS
WALTER A. TILLIT, JR.
90691
LICENSED PROFESSIONAL ENGINEER

P.E. SEAL/SIGNATURE/DATE

WALTER A. TILLIT Jr. P.E.
PROFESSIONAL ENGINEER
6355 N.W. 36TH. ST., STE. 305
VIRGINIA GARDENS, FL. 33166
PHONE : (305) 871-1530 , FAX : (305) 871-1531
TEXAS LIC. # 90691
FIRM REGISTRATION # F-13790

TEXAS DEPARTMENT OF INSURANCE – 2006

heroal RS 53 RC 3 SLAT ENGAGED ROLL-UP SHUTTER

heroal-Johann Henkenjohann GmbH & Co. KG
Osterwieher Str. 80
33415 Verl.

REV. NO	DESCRIPTION	DATE	REV. No	DESCRIPTION	DATE
1			3		
2			4		

DRAWN BY: L.C.
DATE: 11/06/17
DRAWING No. 17-287
SHEET 22 OF 27

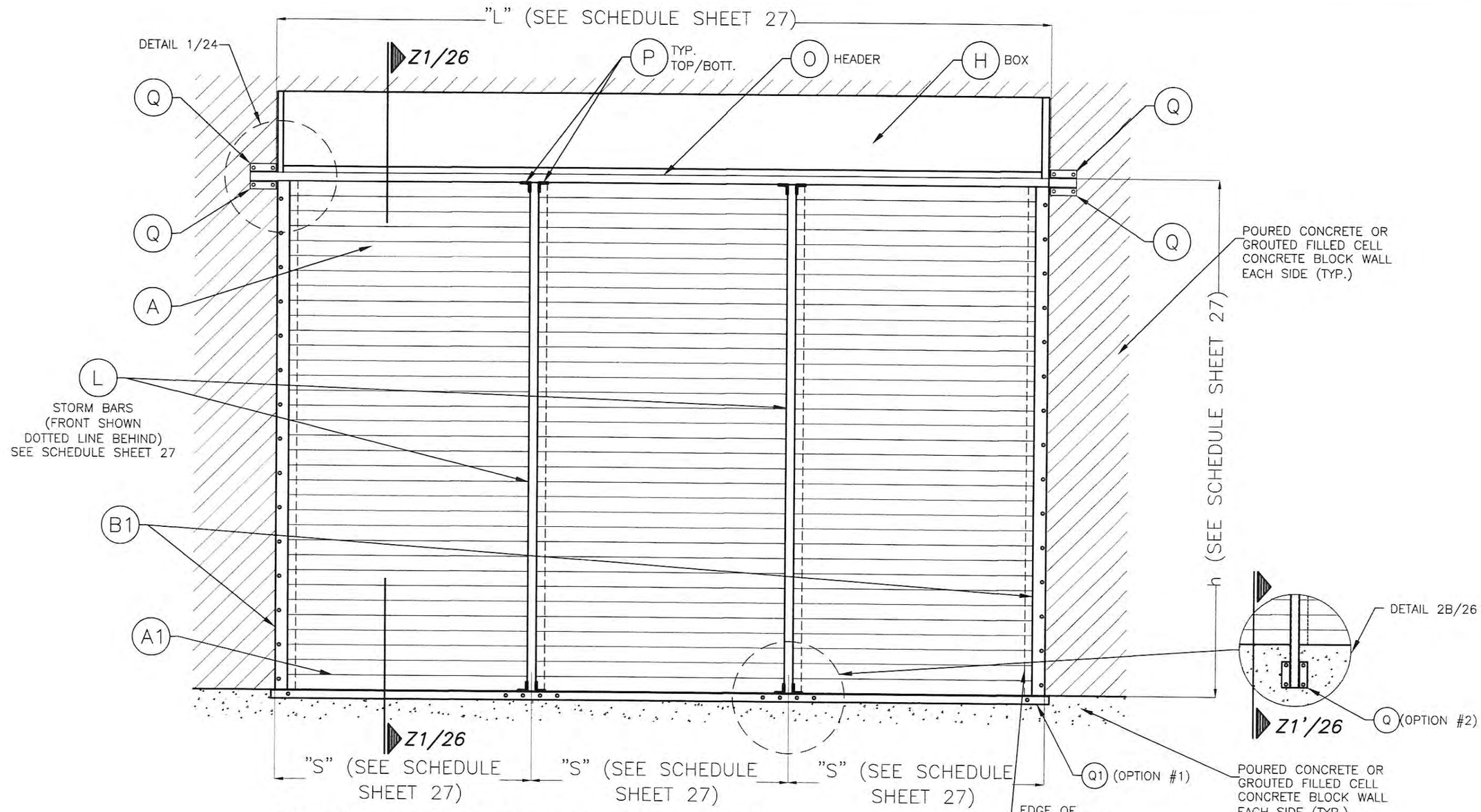

TYPICAL ELEVATION WALL INSTALLATION

(VALID ONLY FOR SHUTTERS WITH STORM BARS & HEADERS)

STATE OF TEXAS
WALTER A. TILLIT, JR.
90691
LICENSED
PROFESSIONAL ENGINEER
11/7/2017

P.E. SEAL/SIGNATURE/DATE

WALTER A. TILLIT Jr. P.E.
PROFESSIONAL ENGINEER
6355 N.W. 36TH. ST., STE. 305
VIRGINIA GARDENS, FL. 33166
PHONE : (305) 871-1530 , FAX : (305) 871-1531
TEXAS LIC. # 90691
FIRM REGISTRATION # F-13790

TEXAS DEPARTMENT OF INSURANCE – 2006

heroal RS 53 RC 3 SLAT ENGAGED ROLL-UP SHUTTER

heroal-Johann Henkenjohann GmbH & Co. KG
Osterwieher Str. 80
33415 Verl.

REV. NO	DESCRIPTION	DATE	REV. No	DESCRIPTION	DATE
1			3		
2			4		

DRAWN BY: L.C.
DATE: 11/06/17
DRAWING No. 17-287
SHEET 23 OF 27

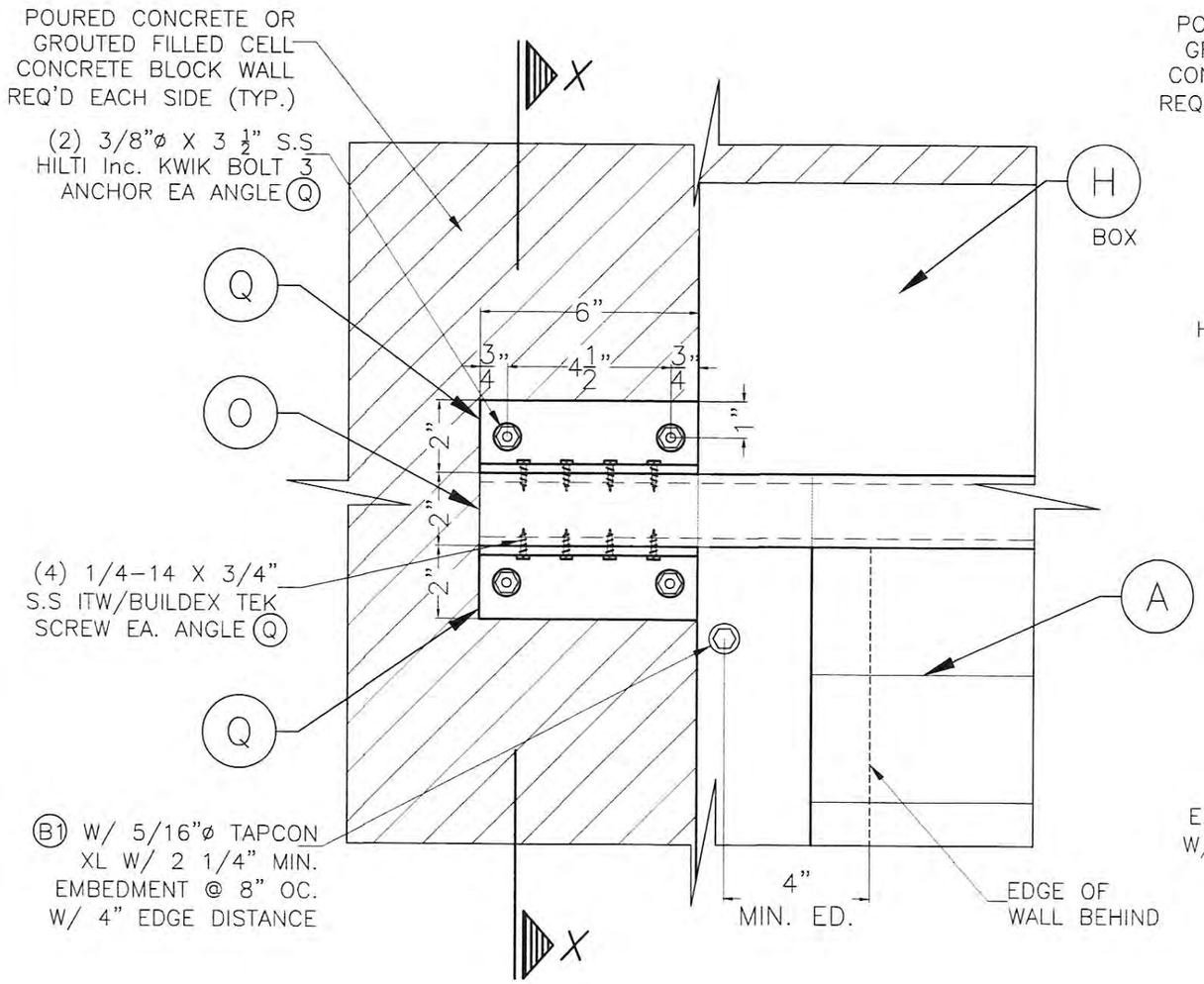

DETAIL 1

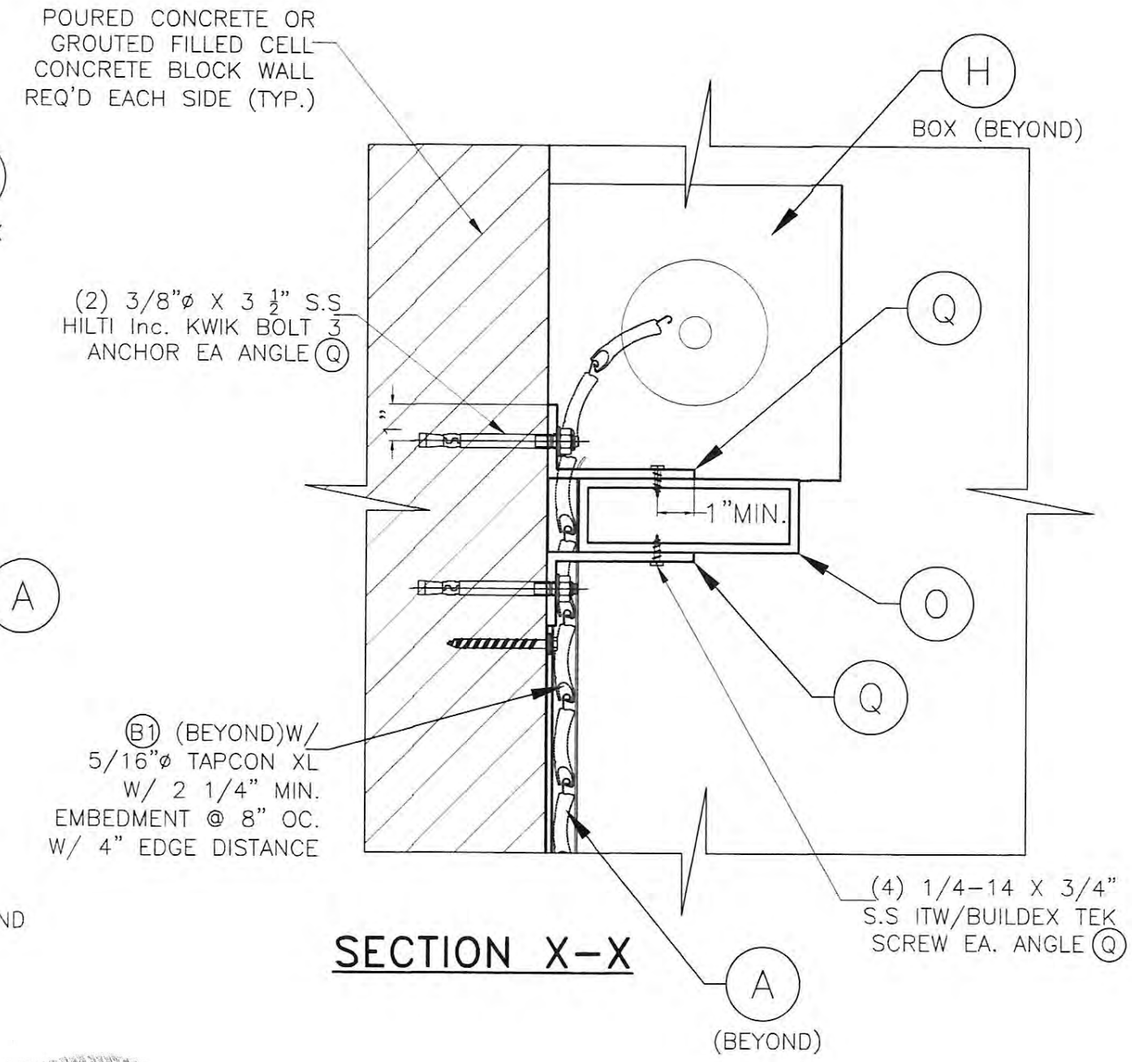

SECTION X-X

(VALID ONLY FOR SHUTTERS WITH STORM BARS & HEADERS)

STATE OF TEXAS
WALTER A. TILLIT, JR.
90691
LICENSED
PROFESSIONAL ENGINEER
11/14/17

P.E. SEAL/SIGNATURE/DATE

WALTER A. TILLIT Jr. P.E.
PROFESSIONAL ENGINEER
6355 N.W. 36TH. ST., STE. 305
VIRGINIA GARDENS, FL. 33166
PHONE : (305) 871-1530 , FAX : (305) 871-1531
TEXAS LIC. # 90691
FIRM REGISTRATION # F-13790

TEXAS DEPARTMENT OF INSURANCE – 2006

heroal RS 53 RC 3 SLAT ENGAGED ROLL-UP SHUTTER

heroal-Johann Henkenjohann GmbH & Co. KG
Osterwieher Str. 80
33415 Verl.

REV. NO	DESCRIPTION	DATE	REV. No	DESCRIPTION	DATE
1			3		
2			4		

DRAWN BY: L.C.
DATE: 11/06/17
DRAWING No. 17-287
SHEET 24 OF 27

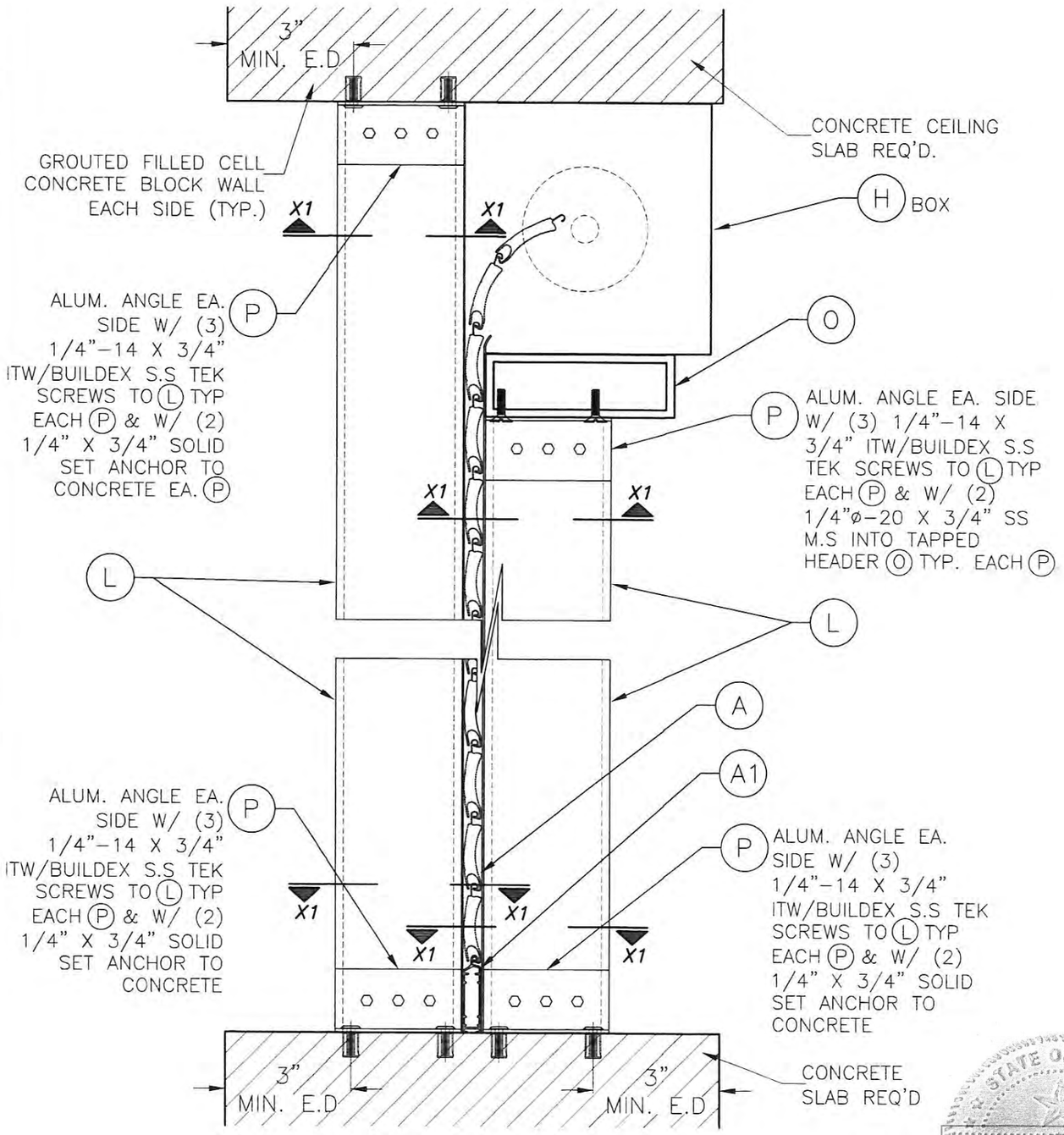

SECTION Z-Z

(VALID ONLY FOR SHUTTERS WITH STORM BARS & HEADERS)

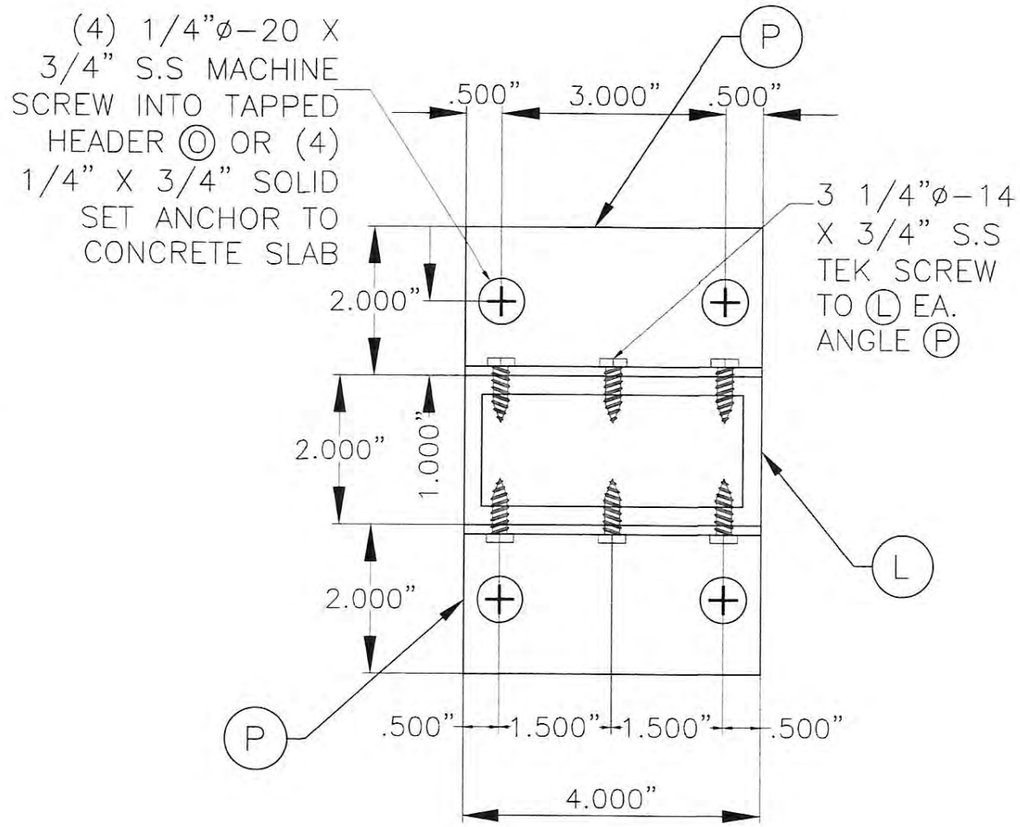

SECTION X1-X1

TEXAS DEPARTMENT OF INSURANCE - 2006

STATE OF TEXAS
WALTER A. TILLIT, JR.
LICENSED
PROFESSIONAL ENGINEER

P.E. SEAL/SIGNATURE/DATE

WALTER A. TILLIT Jr. P.E.
PROFESSIONAL ENGINEER
6355 N.W. 36TH. ST., STE. 305
VIRGINIA GARDENS, FL 33166
PHONE : (305) 871-1530 , FAX : (305) 871-1531
TEXAS LIC. # 90691
FIRM REGISTRATION # F-13790

heroal RS 53 RC 3 SLAT ENGAGED ROLL-UP SHUTTER

heroal-Johann Henkenjohann GmbH & Co. KG
Osterwieher Str. 80
33415 Verl.

REV. NO	DESCRIPTION	DATE	REV. No	DESCRIPTION	DATE
1			3		
2			4		

DRAWN BY: L.C.
DATE: 11/06/17
DRAWING No. 17-287
SHEET 25 OF 27

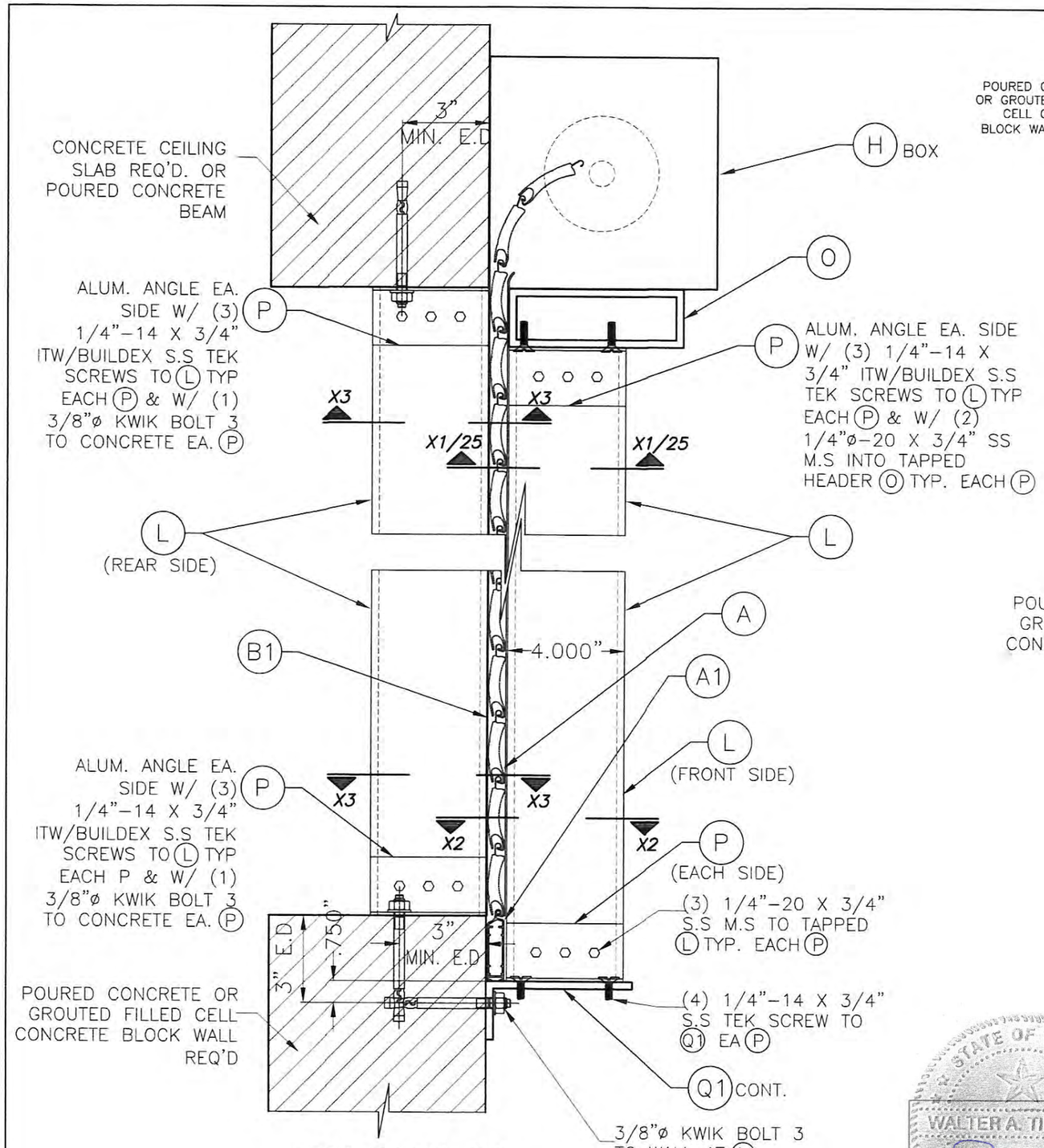

SECTION Z1-Z1

(VALID ONLY FOR SHUTTERS WITH STORM BARS & HEADERS)

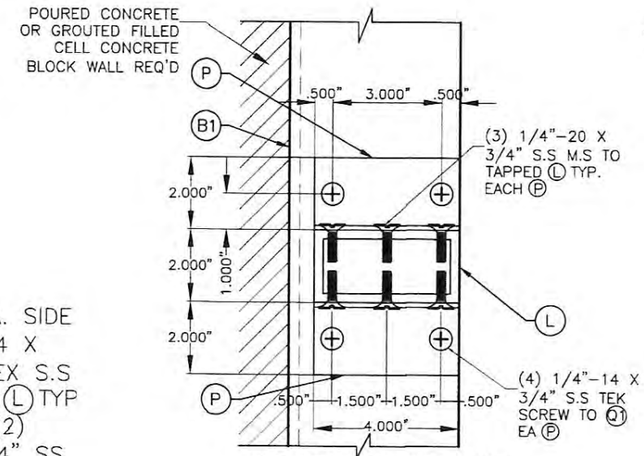

SECTION X2-X2 (FRONT STORM BAR)

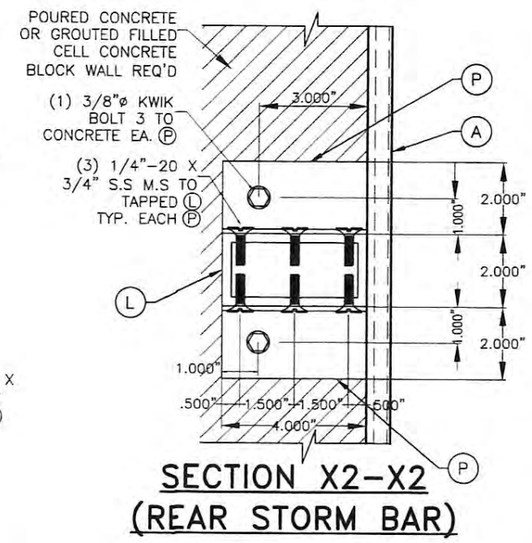

SECTION X2-X2 (REAR STORM BAR)

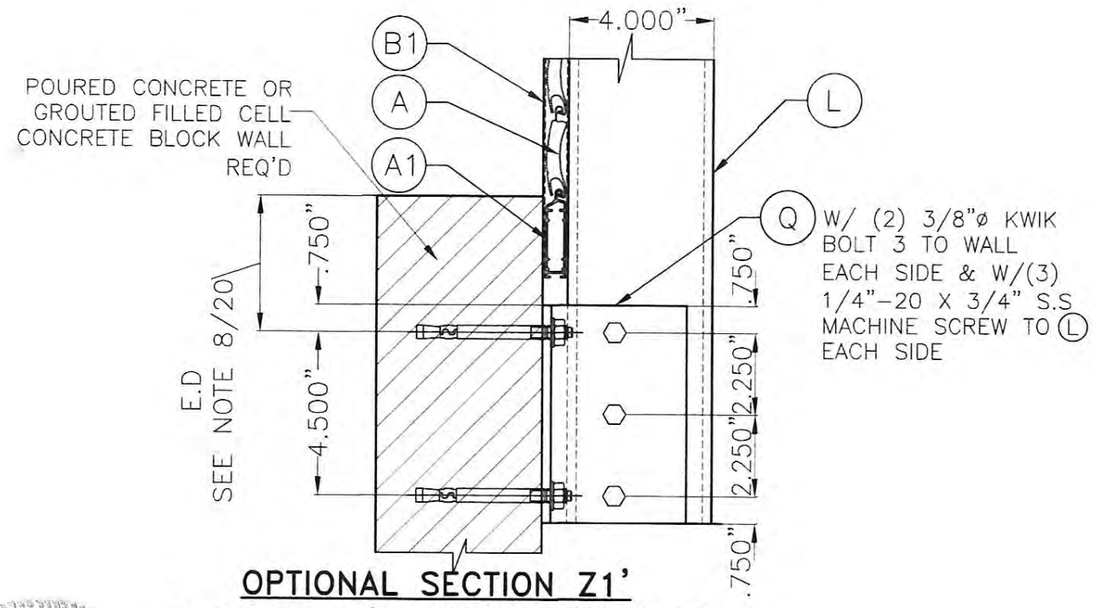

OPTIONAL SECTION Z1' @ BOTTOM (FRONT STORM BAR)

TEXAS DEPARTMENT OF INSURANCE – 2006

STATE OF TEXAS
WALTER A. TILLIT, JR.
90691
LICENSED PROFESSIONAL ENGINEER
11/9/17

P.E. SEAL/SIGNATURE/DATE

WALTER A. TILLIT Jr. P.E.
PROFESSIONAL ENGINEER
6355 N.W. 36TH. ST., STE. 305
VIRGINIA GARDENS, FL. 33166
PHONE : (305) 871-1530 , FAX : (305) 871-1531
TEXAS LIC. # 90691
FIRM REGISTRATION # F-13790

heroal RS 53 RC 3 SLAT ENGAGED ROLL-UP SHUTTER

heroal-Johann Henkenjohann GmBH & Co. KG
Osterwieher Str. 80
33415 Verl.

REV. NO	DESCRIPTION	DATE	REV. No	DESCRIPTION	DATE
1			3		
2			4		

DRAWN BY: L.C.
DATE: 11/06/17
DRAWING No. 17-287
SHEET 26 OF 27

TABLE #1

STORM BAR LOADING CHART MAXIMUM DESIGN PRESSURE RATING (p. s. f.) AND CORRESPONDING MAXIMUM SPAN "h" FOR A GIVEN TYPE OF STORM BAR AND STORM BAR SPACING "S". (SEE NOTES △).

(VALID ONLY FOR SHUTTERS WITH STORM BARS & HEADERS)

(USE MAXIMUM VALUES BETWEEN POSITIVE AND NEGATIVE LOAD)

MAXIMUM DESIGN PRESSURE RATING (p.s.f.)	STORM BAR 2" x 4" x 1/4" (L)		
	✳ STORM BAR SPACING "S"		
	< 3'-0"	3' TO 4'	4' TO 5'
40 OR LESS	10'-0"	10'-0"	10'-0"
45	10'-0"	10'-0"	10'-0"
50	10'-0"	10'-0"	10'-0"
55	10'-0"	10'-0"	10'-0"
60	10'-0"	10'-0"	10'-0"
65	10'-0"	10'-0"	10'-0"
70	10'-0"	10'-0"	10'-0"
75	10'-0"	10'-0"	10'-0"
80	10'-0"	10'-0"	10'-0"
92	9'-6"	8'-7"	8'-0"

NOTES: (△)

(1) CHECK MAX. STORM BAR HEIGHT "h" (Ft.) FOR A GIVEN DESIGN LOAD AND STORM BAR SPACING FROM TABLE #1.

(2) USE TABLE #2 TO DETERMINE MAX. ALLOWABLE HEADERS SPAN "L" (Ft.) FOR A GIVEN STORM BAR HEIGHT "h" (Ft.) REGARDLESS OF DESIGN LOAD.

(3) USE TABLE #3 FOR MAX. HEADER SPAN "L" (Ft.) GIVEN DESIGN WIND LOAD & MAX. STORM BAR HEIGHT "h" (Ft.).

(4) MAX, STORM BAR HEIGHT "h" & MAX. HEADER SPAN "L" FOR A GIVEN DESIGN WIND LOAD MUST COMPLY WITH ALL TABLES #1, 2 & 3.

TABLE #2

MAX. HEAER SPAN "L" GIVEN STORM BAR HEIGHT "h" (SEE NOTES △).

STORM BAR HEIGHT "h"	MAX. HEADER SPAN "L"
⩽ 6'-7"	15'-0"
>6'-7" TO 8'	14'-0"
>8'-0" TO 10'	13'-0"

TABLE #3

HEADER LOADING CHART MAXIMUM DESIGN PRESSURE RATING (psf) AND CORRESPONDING MAXIMUM SPAN "L" FOR A GIVEN TYPE OF HEADER. (SEE NOTES △).

(VALID ONLY FOR SHUTTERS WITH STORM BARS & HEADERS)

(USE MAXIMUM VALUES BETWEEN POSITIVE AND NEGATIVE LOAD)

MAXIMUM DESIGN PRESSURE RATING (p.s.f.)	TYPE 1 HEADER (O) 2" x 6" x 1/4"		
	STORM BAR HEIGHT		
	⩽ 6'-0"	6' TO 7'-6"	⩽ 7'-6" TO 10'
40.0 OR LESS	15'-0"	15'-0"	15'-0"
45.0	15'-0"	15'-0"	15'-0"
50.0	15'-0"	15'-0"	15'-0"
55.0	15'-0"	15'-0"	15'-0"
60.0	15'-0"	15'-0"	15'-0"
65.0	15'-0"	15'-0"	14'-9"
70.0	15'-0"	15'-0"	14'-3"
75.0	15'-0"	15'-0"	13'-9"
80.0	15'-0"	15'-0"	13'-4"
92.0	15'-0"	13'-0"	12'-0"

TEXAS DEPARTMENT OF INSURANCE – 2006

STATE OF TEXAS
WALTER A. TILLIT, JR.
90691
LICENSED
PROFESSIONAL ENGINEER

P.E. SEAL/SIGNATURE/DATE

WALTER A. TILLIT Jr. P.E.
PROFESSIONAL ENGINEER
6355 N.W. 36TH. ST., STE. 305
VIRGINIA GARDENS, FL. 33166
PHONE : (305) 871-1530 , FAX : (305) 871-1531
TEXAS LIC. # 90691
FIRM REGISTRATION # F-13790

heroal RS 53 RC 3 SLAT ENGAGED ROLL-UP SHUTTER

heroal-Johann Henkenjohann GmbH & Co. KG
Osterwieher Str. 80
33415 Verl.

REV. NO	DESCRIPTION	DATE	REV. No	DESCRIPTION	DATE
1			3		
2			4		

DRAWN BY: L.C.

DATE: 11/06/17

DRAWING No. 17-287

SHEET 27 OF 27