GENERAL NOTES: (SEE INDEX OF SHEETS ON SHEET 2)

1. 40mm ER SLAT BERTHA ROLL UP HURRICANE SHUTTER SHOWN ON THIS PRODUCT EVALUATION DOCUMENT (P.E.D.) HAS BEEN VERIFIED FOR COMPLIANCE IN ACCORDANCE WITH THE 2006 EDITIONS OF THE INTERNATIONAL BUILDING CODE, (I.B.C.) AND INTERNATIONAL RESIDENTIAL CODE, (I.R.C.) WITH THE 2006 TEXAS REVISIONS, EFFECTIVE JANUARY 1, 2008.

   THIS PRODUCT'S SHALL BE INSTALLED AT SEAWARD AND INLAND AREAS, AS DEFINED BY THE TEXAS DEPARTMENT OF INSURANCE. DESIGN WIND LOADS SHALL BE DETERMINED AS PER SECTION 1609 OF THE OF THE INTERNATIONAL BUILDING CODE, FOR A BASIC WIND SPEED AS REQUIRED BY THE JURISDICTION WHERE SHUTTER WILL BE INSTALLED, AND FOR A DIRECTIONALITY FACTOR Kd=0.85, IN ACCORDANCE W/ ASCE 7-05 STANDARD IN ORDER TO VERIFY THAT COMPONENTS AND ANCHORS ON THIS P.E.D. AS TESTED WERE NOT OVER STRESSED, A 33% INCREASE IN ALLOWABLE STRESS FOR WIND LOADS WAS NOT USED IN THEIR ANALYSIS. FASTENERS SPACING TO WOOD HAS BEEN DETERMINED IN ACCORDANCE WITH N.D.S. 2005.

   IN ORDER TO VERIFY THAT COMPONENTS AND ANCHORS ON THIS P.E.D. AS TESTED, WERE NOT OVER STRESSED, A 33% INCREASE IN ALLOWABLE STRESS FOR WIND LOADS WAS NOT USED IN THEIR ANALYSIS. FASTENERS SPACING TO WOOD HAS BEEN DETERMINED IN ACCORDANCE WITH N.D.S. 2005.

   40mm ER SLAT BERTHA ROLL UP HURRICANE SHUTTER'S ADEQUACY FOR IMPACT AND FATIGUE RESISTANCE HAS BEEN VERIFIED IN ACCORDANCE WITH SECTION 1609.1.2 & R301.1.3 OF THE ABOVE MENTIONED CODE AS PER:

   – AMERICAN TESTING LAB OF SOUTH FLORIDA REPORTS # 0730.01-13 WITH ADDENDUM #1, DATED 8/5/14, 0404.01-08, 0612.01-14, 0530.01-14 WITH ADDENDUM #1, DATED 10/12/14, 0917.01-14 & 1211.01-14.

2. ALL ALUMINUM EXTRUSIONS SHALL BE ALUMINUM ASSOCIATION 6063-T6 ALLOY & TEMPER (UNLESS OTHERWISE NOTED).

3. ALL SCREWS & BOLTS (EXCEPT COMPONENT (11))INSTALLED AT SEAWARD AREAS TO BE STAINLESS STEEL 304 OR 316 AISI SERIES AND MEET ASTM A167, OR HOT DIPPED GALVANIZED (AFTER FABRICATION) CARBON STEEL AS PER ASTM A123 OR ASTM A153, OR HOT DIPPED GALVANIZED OR GALVANNEALED (PRIOR TO FABRICATION) AND MEET ASTM A653 WITH 50 KSI YIELD STRENGTH AND 90 KSI TENSILE STRENGTH, PER 2006 TEXAS REVISIONS TO THE 2006 I.B.C. AND THE 2006 I.R.C.

4. ALL SCREWS & BOLTS (EXCEPT COMPONENT (11)) INSTALLED AT INLAND I AREAS TO BE STAINLESS STEEL 304 OR 316 AISI SERIES AND MEET ASTM A167, OR HOT DIPPED GALVANIZED (AFTER FABRICATION) CARBON STEEL AS PER ASTM A123 OR ASTM A153, OR HOT DIPPED GALVANIZED OR GALVANNEALED (PRIOR TO FABRICATION) AND MEET ASTM A653; HOT DIP GALVANIZED OR ELECTRO GALVANIZED PER ASTM A641, MECHANICALLY DEPOSITED ZINC COATINGS PER ASTM B695 OR ELECTRO DEPOSITED ZINC COATINGS PER ASTM B633, PER THE 2006 TEXAS REVISIONS TO THE 2006 I.B.C. AND TO THE 2006 I.R.C.

5. ANCHORS TO WALL FOR (5) &(6)SIDE RAILS SHALL BE AS FOLLOWS: SEE NOTE 8 FOR SUBSTRATE LIMITATIONS BASED ON PRODUCT SYSTEM.

END RETENTION SYSTEM : SLATS (1) & (3)

SUBSTRATE: POURED CONCRETE

ANCHOR TYPE & MANUFACTURER											
3/8"ø WEDGE BOLT/ POWER FASTENERS, INC.			5/16" ø TAPCON XL/ ITW/BUILDEX			5/16"ø TAPPER+XTREME/ POWER FASTENERS, INC. *			5/16" ø ULTRACON/ ELCO CONST. PRODUCTS *		
MIN. E.D.	MIN. EMBED.	MIN. f'c	MIN. E.D.	MIN. EMBED.	MIN. f'c	MIN. E.D.	MIN. EMBED.	MIN. f'c	MIN. E.D.	MIN. EMBED.	MIN. f'c
4 1/2"	3 1/2"	3 ksi	2 1/2"	2 1/4"	3 ksi	3 5/16"	2 1/2"	3 ksi	3 1/8"	2"	3.5 ksi

* THIS ANCHOR SHALL NOT BE USED W/ SLAT (3)

SUBSTRATE: WOOD (G=0.46)

ANCHOR TYPE & MANUFACTURER	
1/4" ø MAXI SET/ ITW/BUILDEX	
MIN. E.D.	MIN. EMBED.
2 1/4"	2 3/4"

SUBSTRATE: GROUTED CONCRETE BLOCK (ASTM C-90)

ANCHOR TYPE & MANUFACTURER							
3/8"ø KWIK HUS BOLT/ HILTI, INC.		5/16" ø TAPCON XL/ ITW/BUILDEX		5/16"ø TAPPER+XTREME/ POWER FASTENERS, INC. *		5/16" ø ULTRACON/ ELCO CONST. PRODUCTS *	
MIN. E.D.	MIN. EMBED.	MIN. E.D.	MIN. EMBED.	MIN. E.D.	MIN. EMBED.	MIN. E.D.	MIN. EMBED.
4"	3 1/4"	4"	2 1/4"	4"	2 1/2"	2 1/2"	2 1/4"

* THIS ANCHOR SHALL NOT BE USED W/ SLAT (3)

THIS DRAWING SHALL ONLY BE USED TO OBTAIN PERMITS UNDER THE TEXAS DEPARTMENT OF INSURANCE JURISDICTION

ANCHORS NOTES:

(1) NO EMBEDMENT INTO FINISH MATERIAL SHALL BE CONSIDERED AS PART OF THE REQUIRED EMBEDMENT.
(2) EDGE DISTANCE IS BEYOND ANY FINISH MATERIAL.
(3) ANCHORS SHALL BE INSTALLED FOLLOWING ALL OF THE RECOMMENDATIONS AND SPECIFICATIONS OF THE ANCHOR'S MANUFACTURER.

6. ANCHORS REQUIRED FOR MULLION CONNECTIONS SHALL BE AS SPECIFIED ON APPLICABLE SECTIONS SHOWN ON SHEETS 10 THRU 15.

   -KWIK BOLT TZ EXPANSION ANCHOR MANUFACTURED BY HILTI, INC.
   -KWIK HUS-H SCREW ANCHOR MANUFACTURED BY HILTI, INC.
   -WEDGE-BOLT ANCHOR MANUFACTURED BY POWER FASTENERS, INC.

   MINIMUM EDGE DISTANCE AND SPACING FOR ABOVE MENTIONED ANCHORS SHALL BE AS INDICATED BELOW OR AT ABOVE MENTIONED SHEETS. EDGE DISTANCE AND EMBEDMENTS ARE BEYOND ANY FINISH MATERIAL.

ANCHOR	SPACING @ 100%	EDGE DISTANCE @ 100%	EMBEDMENT @ 100%	
			CONCRETE	CONCRETE BLOCK
3/4"ø KWIK BOLT TZ	27"	9"	4 3/4" (3000 psi)	NOT ALLOWED
1/2"ø KWIK BOLT TZ	22 1/2"	7 1/2"	3 1/4" (3000 psi)	NOT ALLOWED
3/8"ø KWIK BOLT TZ	6"	4 3/8"	2" (3000 psi)	NOT ALLOWED
3/8"ø KWIK HUS-H SCREW	4"	5"	2" (3000 psi)	NOT ALLOWED
3/8"ø WEDGE-BOLT	4 1/2"	4 1/2"	2 1/2" (3000 psi)	NOT ALLOWED
1/2"ø KWIK HUS-H SCREW OR WEDGE BOLT	6"	6"	3" (3000 psi)	NOT ALLOWED
5/8"ø KWIK HUS-H SCREW	7 1/2"	7 1/2"	2 1/2" (3000 psi)	NOT ALLOWED

7. THE INSTALLATION CONTRACTOR IS TO SEAL/CAULK ALL PRODUCT COMPONENT EDGES WHICH REMAIN IN CONTINUOUS CONTACT WITH THE BUILDING TO PREVENT WIND/RAIN INTRUSION. CAULK AND SEAL PRODUCT TRACKS ALL AROUND FULL LENGTH.

8. IT SHALL BE THE RESPONSIBILITY OF THE CONTRACTOR TO VERIFY THE SOUNDNESS OF THE STRUCTURE WHERE PRODUCT IS TO BE ATTACHED TO INSURE PROPER ANCHORAGE. THIS PRODUCT SHALL ONLY BE ATTACHED TO CONCRETE, GROUT FILLED CELL CONCRETE BLOCK OR WOOD FRAME BUILDINGS. SEE SHEETS 7 THRU 15 FOR LIMITATIONS FOR SUBSTRATE.

9. PRODUCTS INSTALLATION SHALL COMPLY WITH SPECS INDICATED IN THIS DRAWING PLUS ANY BUILDING AND ZONING REGULATIONS PROVIDED BY THE JURISDICTION WHERE PERMIT IS APPLIED TO.

10. PRODUCT LIFTING MECHANISM NOT PART OF THIS APPROVAL.

11. (a) THIS P.E.D. PREPARED BY THIS ENGINEER IS GENERIC AND DOES NOT PROVIDE INFORMATION FOR A SITE SPECIFIC PROJECT; i.e. WHERE THE SITE CONDITIONS DEVIATE FROM THE P.E.D.

    (b) CONTRACTOR TO BE RESPONSIBLE FOR THE SELECTION, PURCHASE AND INSTALLATION INCLUDING LIFE SAFETY OF THIS PRODUCT, BASED ON THIS P.E.D. PROVIDED HE/SHE DOES NOT DEVIATE FROM THE CONDITIONS DETAILED ON THIS DOCUMENT. CONSTRUCTION SAFETY AT SITE IS THE CONTRACTOR'S RESPONSIBILITY.

    (c) THIS P.E.D. WILL BE CONSIDERED INVALID IF ALTERED BY ANY MEANS.

    (d) SITE SPECIFIC PROJECTS SHALL BE PREPARED BY A PROFESSIONAL REGISTERED ENGINEER OR ARCHITECT WHICH WILL BECOME THE ENGINEER OF RECORD (E.O.R.) FOR THE PROJECT AND WHO WILL BE RESPONSIBLE FOR THE PROPER USE OF THE P.E.D. ENGINEER OF RECORD, ACTING AS A DELEGATED ENGINEER TO THE P.E.D. ENGINEER, SHALL SUBMIT TO THIS LATTER THE SITE SPECIFIC DRAWINGS FOR REVIEW.

    (e) THIS P.E.D. SHALL BEAR THE DATE AND ORIGINAL SEAL AND SIGNATURE OF THE PROFESSIONAL ENGINEER OF RECORD THAT PREPARED IT.

12. PRODUCT MANUFACTURE'S LABEL SHALL BE LOCATED ON A READILY VISIBLE LOCATION AT PRODUCT IN ACCORDANCE WITH TEXAS DEPARTMENT OF INSURANCE REQUIREMENTS. ONE LABEL SHALL BE PLACED FOR EVERY OPENING.

TEXAS DEPARTMENT OF INSURANCE – 2006

STATE OF TEXAS
3/10/15
P.E. SEAL/SIGNATURE/DATE

WALTER A. TILLIT Jr. P.E.
PROFESSIONAL ENGINEER
6355 N.W. 36TH. ST., STE. 305
VIRGINIA GARDENS, FL. 33166
PHONE : (305) 871-1530 , FAX : (305) 871-1531
TEXAS LIC. # 90691
FIRM REGISTRATION # F-13790

40mm ER SLAT BERTHA ROLL-UP HURRICANE SHUTTER

AMERICAN SHUTTER SYSTEMS ASSOC., INC.
4268 WESTROADS DRIVE
WEST PALM BEACH, FL. 33407
PHONE: (877)999-2772 FAX: (561)209-8380

REV. No	DESCRIPTION	DATE	REV. No	DESCRIPTION	DATE
1	OLD 14-087	03/06/15	3		
2			4		

DRAWN BY: F.R.L.
03/06/15 DATE
15-013 DRAWING No
SHEET 1 OF 29

INDEX OF SHEETS

SHEET #	DESCRIPTION
1	GENERAL NOTES AND ANCHORS SPECIFICATIONS
2	INDEX OF SHEETS
3	COMPONENTS
4	BOX STRUCTURAL COMPONENTS AND ASSEMBLY DETAILS
5	ELEVATIONS FOR INSTALLATION INTO CONCRETE AND GROUTED CONCRETE BLOCK
6	Vx & Vy FORCES SCHEDULES FOR SLATS 1 & 3
7	INSTALLATION INTO WOOD FRAME STRUCTURES W/ SLATS 1 & 3 & SLAT SCREW 11
8	INSTALLATION INTO WOOD FRAME STRUCTURES W/ SLATS 1 & 3 & SLAT SCREW 11 , SECTIONS D, E, D', E'
9	VERTICAL SECTIONS A, B, C FOR SLAT 1
10	VERTICAL SECTIONS A', B', C' FOR SLAT 3
11	SIDE RAIL CONNECTIONS INTO EXISTING POURED CONCRETE OR GROUTED CONCRETE BLOCK & INTO MULLIONS
12	END & INTERIOR TRAPPED MOUNTED MULLION INSTALLATION FOR ALL LOADS & SPANS
13	END & INTERIOR TRAPPED MOUNTED MULLION INSTALLATION W/ LOADS & SPANS LIMITATIONS
14	END & INTERIOR WALL MOUNTED MULLION INSTALLATION FOR ALL LOADS & SPANS
15	END & INTERIOR WALL MOUNTED MULLION INSTALLATION W/ LOADS & SPANS LIMITATIONS
16	MANDATORY PROCEDURE TO VERIFY PRODUCT CODE COMPLIANCE FOR INSTALLATION INTO CONCRETE OR GROUTED CONCRETE BLOCK
17	SLAT 1 PERFORMANCE CHART FOR INSTALLATION INTO CONCRETE
18	SLAT 1 PERFORMANCE CHART FOR INSTALLATION INTO GROUTED CONCRETE BLOCK
19	SLAT 3 PERFORMANCE CHART FOR INSTALLATION INTO CONCRETE & GROUTED CONCRETE BLOCK
20	SLAT 1 ANCHORS SCHEDULES INTO POURED CONCRETE, SCHEDULE IIa
21	SLAT 1 ANCHORS SCHEDULES INTO GROUTED BLOCK WALL, SCHEDULE IIb
22	SLAT 3 ANCHORS SCHEDULES INTO POURED CONCRETE, SCHEDULE IIa
23	SLAT 3 ANCHORS SCHEDULES INTO GROUTED BLOCK WALL, SCHEDULE IIb
24	SLAT 1 MULLION SCHEDULES, FLOOR TO CEILING & WALL MOUNTING, SCHEDULES 1a & 2a
25	SLAT 1 MULLION SCHEDULES, FLOOR TO CEILING & WALL MOUNTING, SCHEDULES 1c & 2c
26	SLAT 1 MULLION SCHEDULES, FLOOR TO CEILING & WALL MOUNTING, SCHEDULES 1b & 2b
27	SLAT 1 MULLION SCHEDULES, FLOOR TO CEILING & WALL MOUNTING, SCHEDULES 1b' & 2b'
28	SLAT 3 MULLION SCHEDULES, FLOOR TO CEILING & WALL MOUNTING, SCHEDULES 1a, 2a, 1c & 2c
29	SLAT 3 MULLION SCHEDULES, FLOOR TO CEILING & WALL MOUNTING, SCHEDULES 1b' & 2b'

TEXAS DEPARTMENT OF INSURANCE – 2006

3/10/15

P.E. SEAL/SIGNATURE/DATE

WALTER A. TILLIT Jr. P.E.
PROFESSIONAL ENGINEER
6355 N.W. 36TH. ST., STE. 305
VIRGINIA GARDENS, FL. 33166
PHONE : (305) 871-1530 . FAX : (305) 871-1531
TEXAS LIC. # 90691
FIRM REGISTRATION # F-13790

40mm ER SLAT BERTHA ROLL-UP HURRICANE SHUTTER

AMERICAN SHUTTER SYSTEMS ASSOC., INC.
4268 WESTROADS DRIVE
WEST PALM BEACH, FL. 33407
PHONE: (877)999-2772 FAX: (561)209-8380

REV. No	DESCRIPTION	DATE	REV. No	DESCRIPTION	DATE
1	OLD 14-087	03/06/15	3		
2			4		

DRAWN BY: F.R.L.

03/06/15 DATE

15-013 DRAWING No

SHEET 2 OF 29

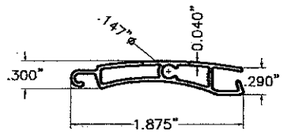

(1) CLOSED SLAT
6063–T6 ALUMINUM ALLOY
SCALE 1 1/2"=1"

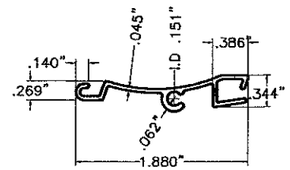

(3) SLAT W/OPEN BACK W/SCREW BOSS
6063–T6 ALUMINUM ALLOY
SCALE 1 1/2"=1"

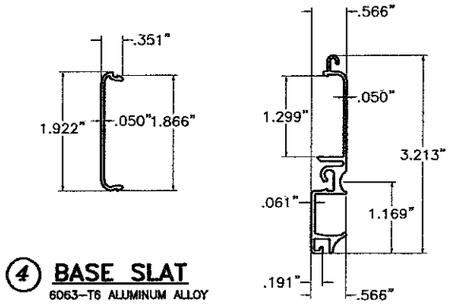

(4) BASE SLAT
6063–T6 ALUMINUM ALLOY

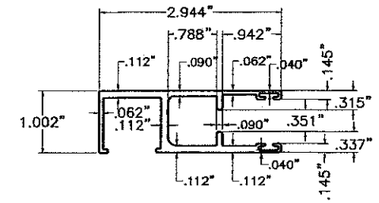

(5) SIDE RAIL TYPE 1
6063–T6 ALUMINUM ALLOY

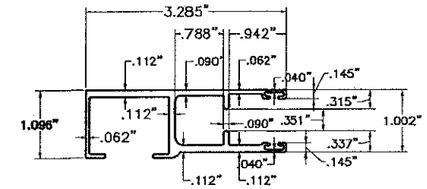

(6) SIDE RAIL TYPE 2
6063–T6 ALUMINUM ALLOY

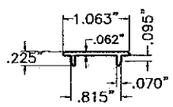

(7) SNAP CAP
6063–T6 ALUMINUM ALLOY

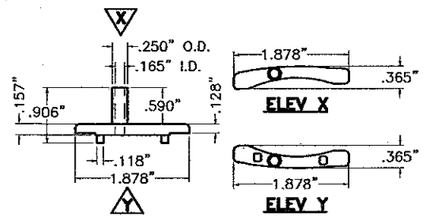

(8) END CAP W/MONOLITHIC SCREW SLEEVE (LEFT SHOWN, RIGHT IS MIRROR)
RIGID NYLON, 76–78 TYPE "D" SHORE HARDNESS

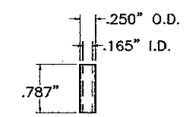

(9) EXTENDED SCREW SLEEVE W/O END CAP
RIGID NYLON, 76–78 TYPE "D" SHORE HARDNESS

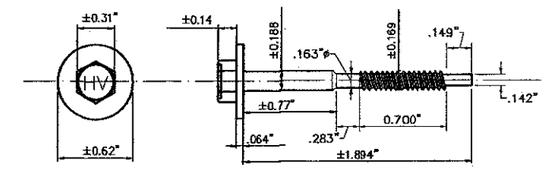

#8–32 x 1.894" AISI 410 S.S. SCREW W/ 0.31" ø HV MARKED HEAD & t= 0.064"x 0.620" ø MONOLITHIC WASHER W/ BERTHA H.V. DACROSHIELD COATING SYSTEM AS MANUFACTURED BY APPROVED COATING APPLICATORS REGISTERED WITH AMERICAN SHUTTER SYSTEM ASSOCIATION

(11) SCREW @ EVERY OTHER SLAT, INCLUDING BASE SLAT FOR POURED CONCRETE, GROUTED BLOCK & WOOD INSTALLATIONS

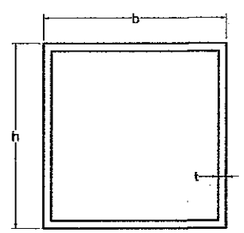

BUILD–OUT MOUNTED TUBES
6063–T6 ALUMINUM ALLOY

B.O TUBES	b	h	t
(12) WOOD	3"	2" MAX.	0.125"
(12A) CONC./ BLOCK	3"	4" MAX.	0.125"
(15) CONC./ BLOCK	4"	4" MAX.	0.25"

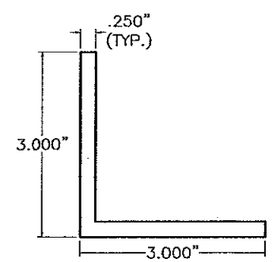

(13) TRAPPED ANGLE
6063–T6 ALUMINUM ALLOY

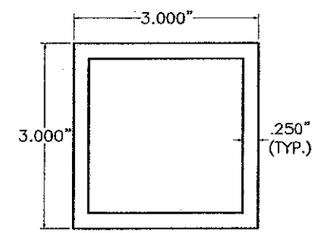

(14) OPTIONAL TRAPPED MOUNTED TUBE TO (13)
6063–T6 ALUMINUM ALLOY

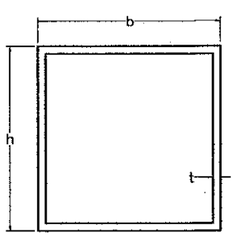

MULLIONS
6063–T6 ALUMINUM ALLOY

MULLIONS	b	h	t
(24)	4"	6"	0.25"
(25)	4"	8"	0.25"

COMPONENTS

N.T.S.

TEXAS DEPARTMENT OF INSURANCE – 2006

STATE OF TEXAS
10/15
WALTER A. TILLIT JR.
P.E. SEAL/SIGNATURE/DATE

WALTER A. TILLIT Jr. P.E.
PROFESSIONAL ENGINEER
6355 N.W. 36TH. ST., STE. 305
VIRGINIA GARDENS, FL. 33166
PHONE : (305) 871–1530 , FAX : (305) 871–1531
TEXAS LIC. # 90691
FIRM REGISTRATION # F–13790

40mm ER SLAT BERTHA ROLL–UP HURRICANE SHUTTER

AMERICAN SHUTTER SYSTEMS ASSOC., INC.
4268 WESTROADS DRIVE
WEST PALM BEACH, FL. 33407
PHONE: (877)999–2772 FAX: (561)209–8380

REV. No	DESCRIPTION	DATE	REV. No	DESCRIPTION	DATE
1	OLD 14–087	03/06/15	3	GENERAL	12/12/14
2			4		

DRAWN BY: F.R.L.
03/06/15 DATE
15–013 DRAWING No
SHEET 3 OF 29

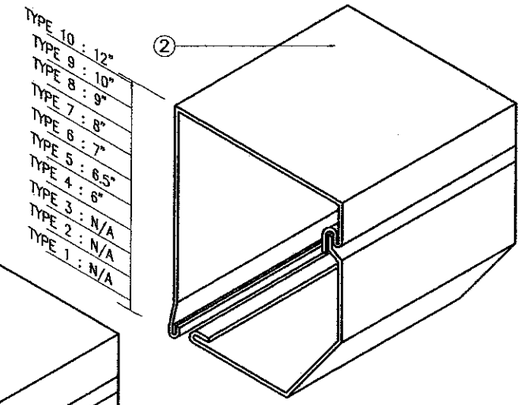

45 & 45/S HOUSINGS

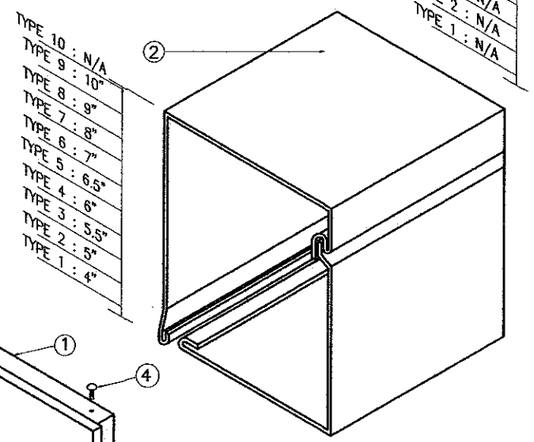

90 HOUSING

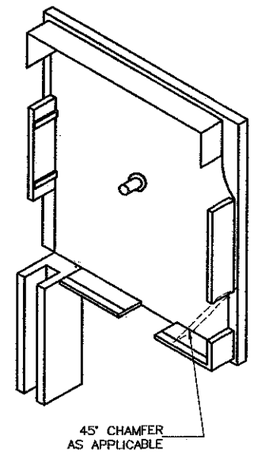

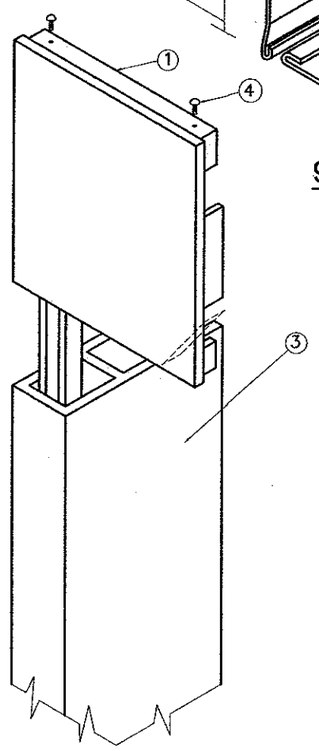

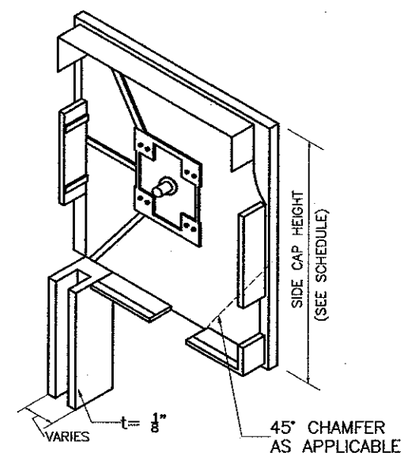

1 END CAPS:

STRUCTURAL COMPONENTS FOR OPERATING SYSTEM

1 – SIDE/END CAP (CAST ALUMINUM) *
2 – HOUSING, 0.040" THICK SHEET METAL (3105–H14 OR STRONGER)
3 – SIDE RAIL

FASTENERS

4 – 3/16" ALUMINUM POP RIVETS(6 REQ'D EA. SIDE CAP) : 2 @ TOP, 2 @ REAR, 2@ BOTTOM

* SHALL BE CAPABLE TO SUSTAIN SLAT'S WEIGHT AND ASSURE LIFTING MECHANISM (SEE NOTES 10/1 & 11(b)/1)

BOX STRUCTURAL COMPONENTS AND ASSEMBLY DETAIL

(SEE NOTES 10 & 11(b) ON SHEET 1)

TEXAS DEPARTMENT OF INSURANCE – 2006

STATE OF TEXAS
WALTER A. TILLIT JR.
3/16/15
P.E. SEAL/SIGNATURE/DATE

WALTER A. TILLIT Jr. P.E.
PROFESSIONAL ENGINEER
6355 N.W. 36TH. ST., STE. 305
VIRGINIA GARDENS, FL. 33166
PHONE : (305) 871–1530 , FAX : (305) 871–1531
TEXAS LIC. # 90691
FIRM REGISTRATION # F–13790

40mm ER SLAT BERTHA ROLL–UP HURRICANE SHUTTER

AMERICAN SHUTTER SYSTEMS ASSOC., INC.
4268 WESTROADS DRIVE
WEST PALM BEACH, FL. 33407
PHONE: (877)999–2772 FAX: (561)209–8380

REV. No	DESCRIPTION	DATE	REV. No	DESCRIPTION	DATE
1	OLD 14–087	03/06/15	3		
2			4		

DRAWN BY: F.R.L.
03/06/15 DATE
15–013 DRAWING No
SHEET 4 OF 29

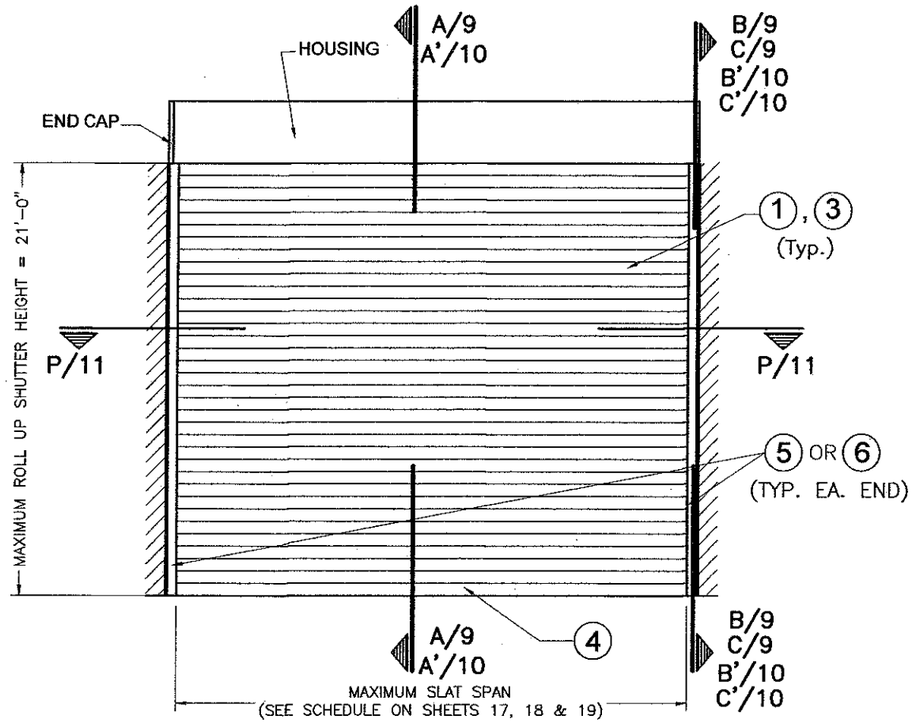

TYPICAL SINGLE UNIT ELEVATION W/O MULLIONS

NOTE: SEE SHEETS 3 & 4 FOR COMPONENTS NOMENCLATURE.

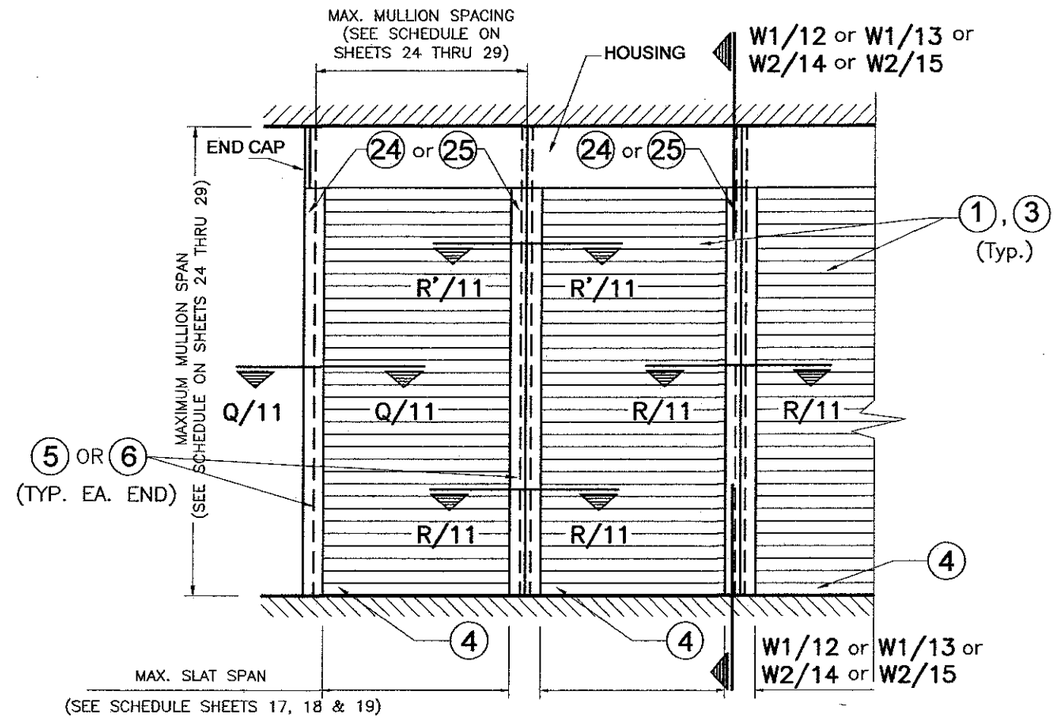

TYPICAL CONSECUTIVE SINGLE UNIT ELEVATION W/ MULLIONS

NOTE: SEE SHEET 3 & 4 FOR COMPONENTS NOMENCLATURE.

END RETENTION SYSTEM

INSTALLATION INTO CONCRETE/GROUTED CONCRETE BLOCK BUILDINGS

TEXAS DEPARTMENT OF INSURANCE – 2006

STATE OF TEXAS

8/10/15

P.E. SEAL/SIGNATURE/DATE

WALTER A. TILLIT Jr. P.E.
PROFESSIONAL ENGINEER
6355 N.W. 36TH. ST., STE. 305
VIRGINIA GARDENS, FL. 33166
PHONE : (305) 871-1530 , FAX : (305) 871-1531
TEXAS LIC. # 90691
FIRM REGISTRATION # F-13790

40mm ER SLAT BERTHA ROLL-UP HURRICANE SHUTTER

AMERICAN SHUTTER SYSTEMS ASSOC., INC.
4268 WESTROADS DRIVE
WEST PALM BEACH, FL. 33407
PHONE: (877)999-2772 FAX: (561)209-8380

REV. No	DESCRIPTION	DATE	REV. No	DESCRIPTION	DATE
1	OLD 14-087	03/06/15	3		
2			4		

DRAWN BY: F.R.L.

03/06/15 DATE

15-013 DRAWING No

Vx FORCES (Lb/FT) & Vy FORCES (Lb/FT) ACTING AT JAMBS FOR AN A.S.D. DESIGN LOAD RANGE, SLAT SPAN RANGE FOR POURED CONCRETE OR GROUTED CONCRETE BLOCK WALL BUILDINGS APPLICABLE TO INSTALLATIONS W/ SLATS ① & ③*

(USE MAXIMUM VALUE BETWEEN POSITIVE AND NEGATIVE A.S.D. LOAD)

SLAT TYPE ①

A.S.D. DESIGN PRESSURE RATING (p.s.f.)	SLAT SPAN RANGE													
	0'–4'		> 4'–5'		> 5'–6'		> 6'–7'		> 7'–9'		> 9'–12'		> 12'–16'	
	Vx	Vy	Vx	Vy	Vx	Vy	Vx	Vy	Vx	Vy	Vx	Vy	Vx	Vy
≤ 30.0	1164	60	1164	75	1164	90	1164	105	1164	135	1164	180	1164	240
>30–40	1524	80	1524	100	1524	120	1524	140	1524	180	1524	240	1524	320
>40–60	1909	120	1909	150	1909	180	1909	210	1909	270	1909	360	1909	429
>60–80	1972	160	1972	200	1972	240	1972	280	1972	360	1972	480	–	–
>80–105	1634	210	1634	263	1634	315	1634	368	1634	460	–	–	–	–
>105–120	1248	240	1248	300	1248	360	1248	410	–	–	–	–	–	–

SLAT TYPE ③

A.S.D. DESIGN PRESSURE RATING (p.s.f.)	SLAT SPAN RANGE									
	0'–4'		> 4'–5'		> 5'–6'		> 6'–7'		>7'–(8'–4")	
	Vx	Vy	Vx	Vy	Vx	Vy	Vx	Vy	Vx	Vy
≤ 30.0	434	125	434	125	434	125	434	125	434	125
>30–40	587	167	587	167	587	167	587	167	587	167
>40–60	883	250	883	250	883	250	883	250	883	250
>60–80	860	273	860	273	860	273	860	273	–	–

* NOTE:
IT SHALL BE THE RESPONSIBILITY OF THE CONTRACTOR OR PERMIT HOLDER TO VERIFY THAT EXISTING STRUCTURE IS DESIGNED TO SUPPORT Vx AND Vy FORCES IN POUNDS PER UNIT FOOT OF PRODUCT HEIGHT AT BOTH JAMBS. SEE THIS SHEET FOR Vx & Vy VALUES.

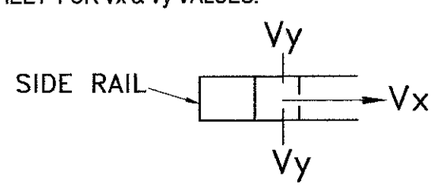

TEXAS DEPARTMENT OF INSURANCE – 2006

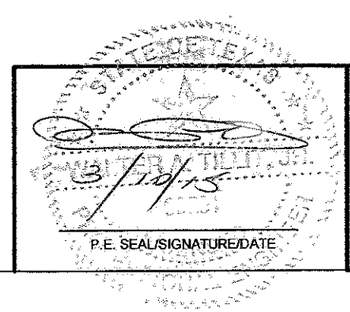

WALTER A. TILLIT Jr. P.E.
PROFESSIONAL ENGINEER
6355 N.W. 36TH. ST., STE. 305
VIRGINIA GARDENS, FL. 33166
PHONE : (305) 871–1530 , FAX : (305) 871–1531
TEXAS LIC. # 90691
FIRM REGISTRATION # F–13790

40mm ER SLAT BERTHA ROLL–UP HURRICANE SHUTTER

AMERICAN SHUTTER SYSTEMS ASSOC., INC.
4268 WESTROADS DRIVE
WEST PALM BEACH, FL. 33407
PHONE: (877)999–2772 FAX: (561)209–8380

REV. No	DESCRIPTION	DATE	REV. No	DESCRIPTION	DATE
1	OLD 14–087	03/06/15	3		
2			4		

DRAWN BY: F.R.L.
03/06/15 DATE
15–013 DRAWING No
SHEET 6 OF 29

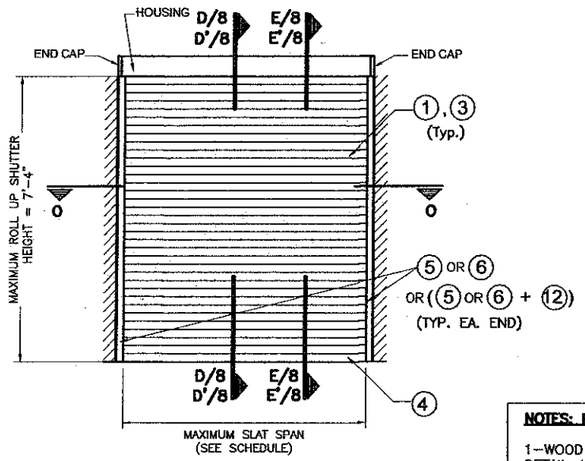

TYPICAL SINGLE UNIT ELEVATION W/O MULLIONS

NOTE: SEE SHEETS 3 & 4 FOR COMPONENTS NOMENCLATURE.

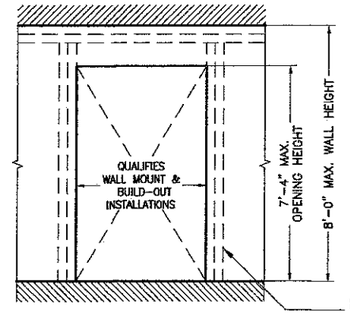

DETAIL 1 (OPENING ELEVATION)

EXISTING BUILDING

MINIMUM 1/2" NOMINAL PLYWOOD OR 1/2" NOMINAL O.S.B., AND (2) 2"x4" WOOD STUDS (TYP. EACH SIDE)

NOTES: FOR DETAIL 1

1–WOOD FRAME WALL TO BE STRICTLY BUILT IN ACCORDANCE WITH SPECS GIVEN ON DETAIL 1 AND PROVISIONS FROM CHAPTER 23 OF THE INTERNATIONAL BUILDING CODE. MINIMUM LENGTH OF WALL AT EITHER SIDE OF OPENING SHALL BE 33".

2–VALID ONLY FOR INSTALLATIONS INTO WOOD STUDS W/ (G=0.46 MIN.) STRUCTURES.

SLAT PERFORMANCE CHART IN WOOD

FOR A GIVEN MAXIMUM A.S.D. DESIGN PRESSURE RATING (p.s.f) AND PRODUCT MOUNT CONDITION FOR INSTALLATIONS W/O STORM BARS PER TYPICAL ELEVATION

MAX. A.S.D. DESIGN PRESSURE RATING (p.s.f.)	MAX. SLAT 1 SPAN "L MAX." (ft)		REQUIRED MIN. SEPARATION TO GLASS MESURED TO BACK OF SLAT (in)	MAX. SLAT 3 SPAN "L MAX." (ft)		REQUIRED MIN. SEPARATION TO GLASS MESURED TO BACK OF SLAT (in)
	SLAT 1			SLAT 3		
	WALL MOUNT	BUILD-OUT MOUNT W/ 12		WALL MOUNT	BUILD-OUT MOUNT W/ 12A	
±30.0	12'–0"	12'–0"	8 1/2" *	8'–4"	8'–4"	7 1/8" *
±40.0	10'–0"	10'–0"	8 1/2" *	8'–4"	8'–4"	7 1/8" *
±45.0	9'–0"	9'–0"	8 1/2" *	8'–4"	8'–4"	7 1/8" *
±55.0	8'–0"	8'–0"	7 1/8" *	8'–4"	8'–4"	7 1/8" *

* ONLY REQUIRED FOR WIND ZONE 4. USE 1" FOR WIND ZONES 1, 2 & 3.

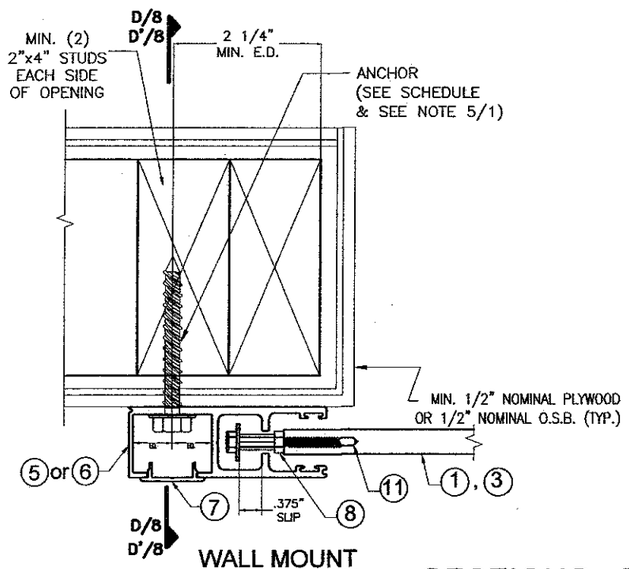

WALL MOUNT

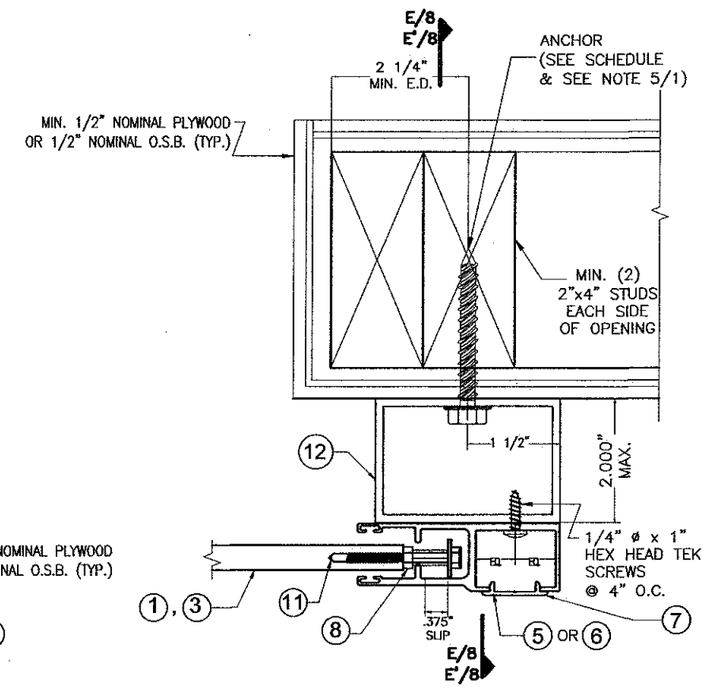

BUILD-OUT MOUNT

SECTIONS 0–0

N.T.S.

1/4" Ø MAXI SET ANCHORS		
MAX. ANCHORS SPACING SCHEDULE SLATS 1 & 3		
MAX. A.S.D. DESIGN PRESSURE RATING (p.s.f.)	SIDE RAILS 5 & 6	
	WALL MOUNT	BUILD-OUT MOUNT W/ 2" B.O 12
± 30.0 psf	4"	4"
>± 30.0 TO ±55.0	4"	4"

END RETENTION SYSTEM

INSTALLATION INTO WOOD FRAME STRUCTURES

(SEE DETAIL 1)

TEXAS DEPARTMENT OF INSURANCE – 2006

P.E. SEAL/SIGNATURE/DATE

WALTER A. TILLIT Jr. P.E.
PROFESSIONAL ENGINEER
6355 N.W. 36TH. ST., STE. 305
VIRGINIA GARDENS, FL. 33166
PHONE : (305) 871–1530 , FAX : (305) 871–1531
TEXAS LIC. # 90691
FIRM REGISTRATION # F–13790

40mm ER SLAT BERTHA ROLL–UP HURRICANE SHUTTER

AMERICAN SHUTTER SYSTEMS ASSOC., INC.
4268 WESTROADS DRIVE
WEST PALM BEACH, FL. 33407
PHONE: (877)999–2772 FAX: (561)209–8380

REV. No	DESCRIPTION	DATE	REV. No	DESCRIPTION	DATE
1	OLD 14–087	03/06/15	3		
2			4		

DRAWN BY: F.R.L.

03/06/15 DATE

15–013 DRAWING No

SHEET 7 OF 29

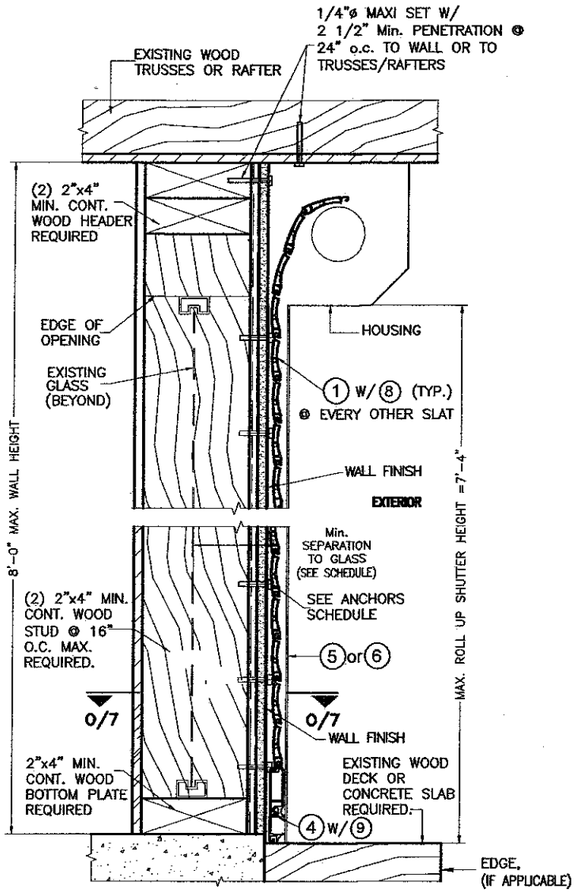

WALL MOUNTING

SECTION D–D

N.T.S.

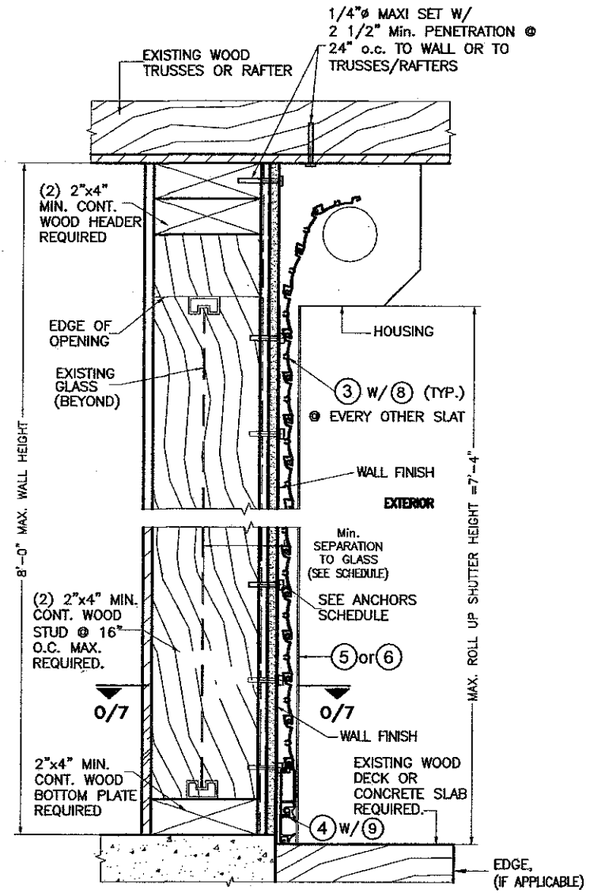

WALL MOUNTING

SECTION D'–D'

N.T.S.

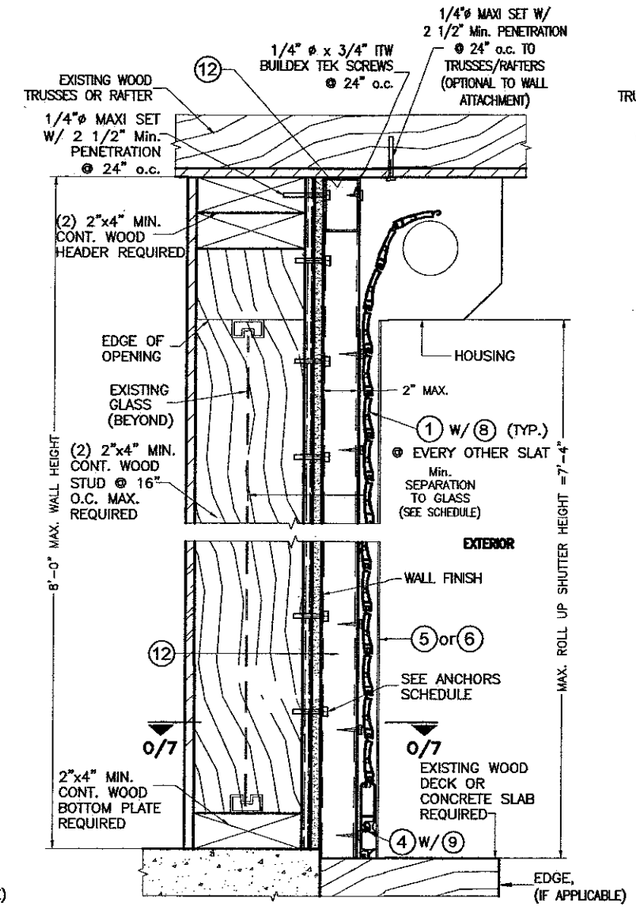

BUILD–OUT MOUNTING

SECTION E–E

N.T.S.

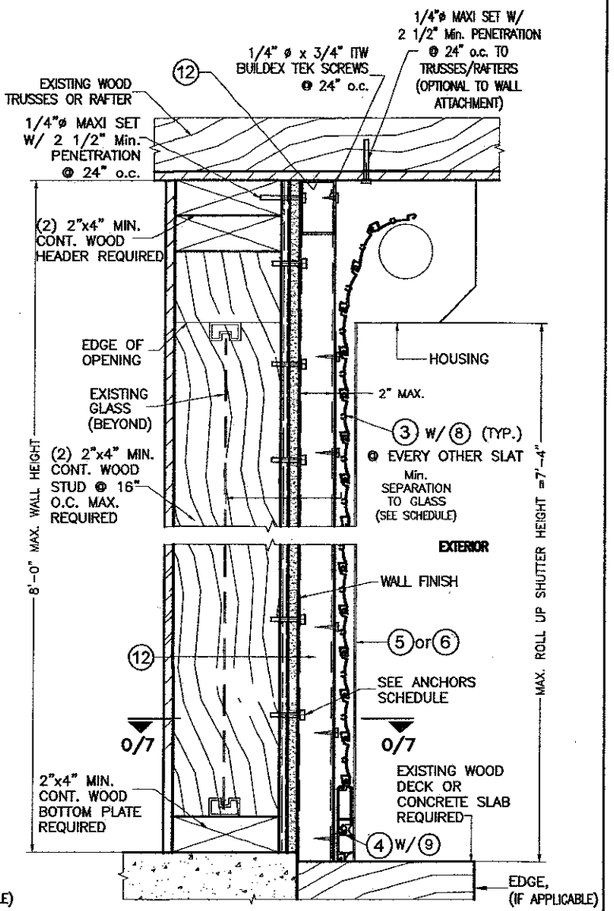

BUILD–OUT MOUNTING

SECTION E'–E'

N.T.S.

END RETENTION SYSTEM
INSTALLATION INTO WOOD FRAME STRUCTURES

TEXAS DEPARTMENT OF INSURANCE – 2006

STATE OF TEXAS
3/10/15
P.E. SEAL/SIGNATURE/DATE

WALTER A. TILLIT Jr. P.E.
PROFESSIONAL ENGINEER
6355 N.W. 36TH. ST., STE. 305
VIRGINIA GARDENS, FL. 33166
PHONE : (305) 871–1530 , FAX : (305) 871–1531
TEXAS LIC. # 90691
FIRM REGISTRATION # F–13790

40mm ER SLAT BERTHA ROLL–UP HURRICANE SHUTTER

AMERICAN SHUTTER SYSTEMS ASSOC., INC.
4268 WESTROADS DRIVE
WEST PALM BEACH, FL. 33407
PHONE: (877)999–2772 FAX: (561)209–8380

REV. No	DESCRIPTION	DATE	REV. No	DESCRIPTION	DATE
1	OLD 14–087	03/06/15	3		
2			4		

DRAWN BY: F.R.L.

03/06/15 DATE

15–013 DRAWING No

SHEET 8 OF 29

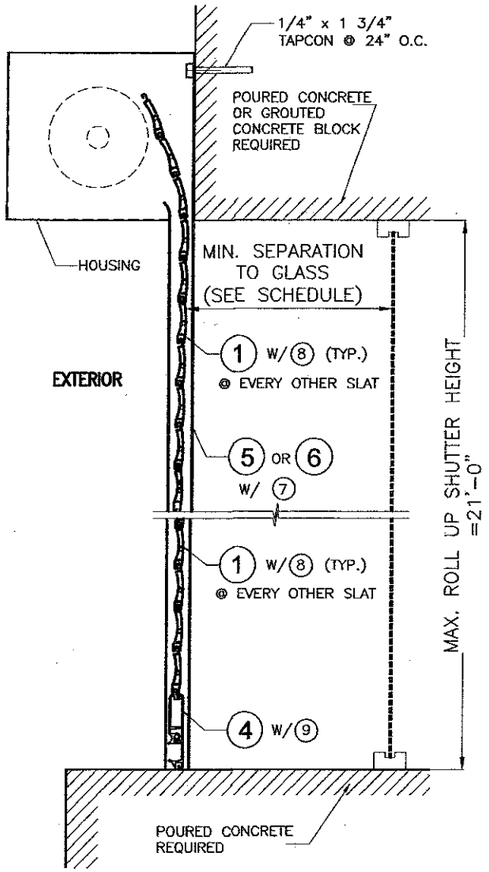

WALL MOUNTED

SECTION A–A

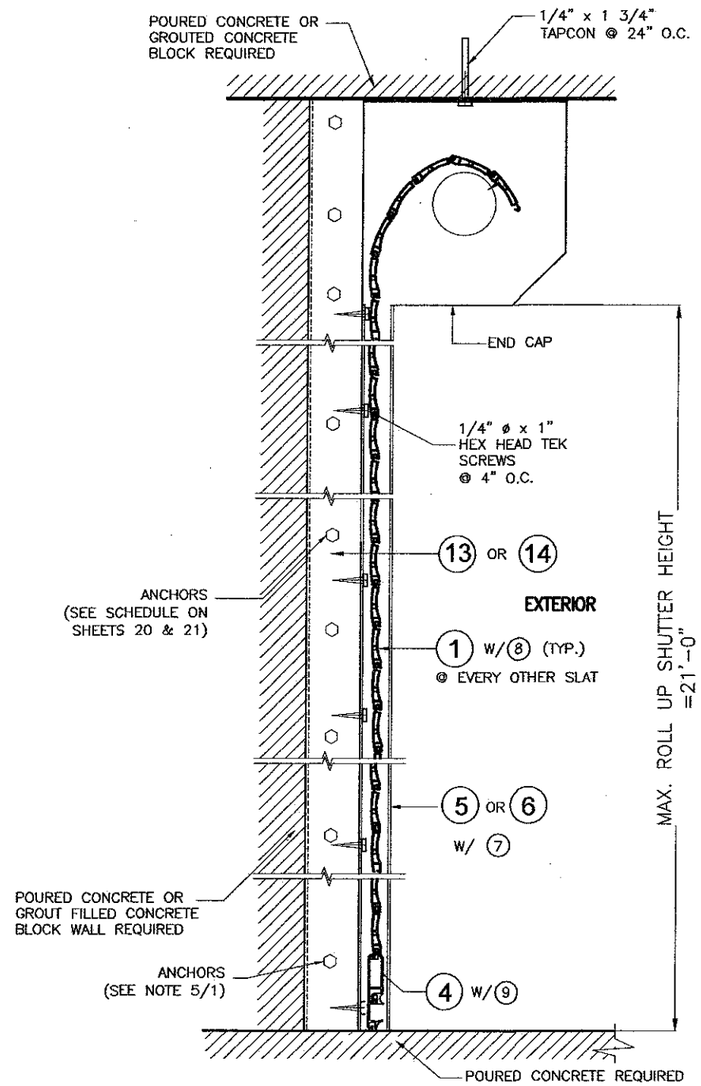

FLOOR/CEILING / TRAPPED MOUNTED

SECTION B–B

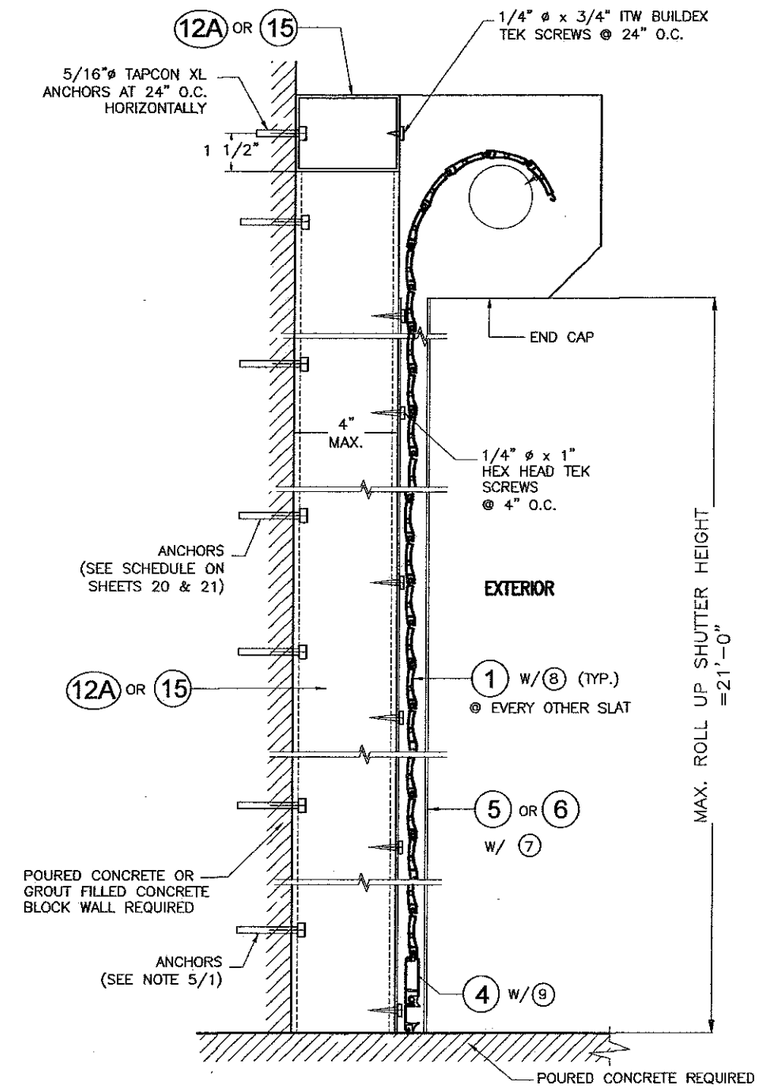

BUILD-OUT MOUNTED

SECTION C–C

INSTALLATION DETAILS ON EXISTING POURED CONCRETE OR GROUT FILLED CELL CONCRETE BLOCK BUILDINGS FOR SINGLE UNIT END RETENTION SYSTEM AS APPLICABLE

N.T.S.

TEXAS DEPARTMENT OF INSURANCE – 2006

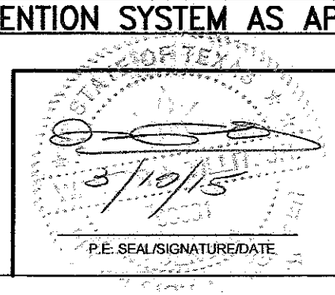

P.E. SEAL/SIGNATURE/DATE

WALTER A. TILLIT Jr. P.E.
PROFESSIONAL ENGINEER
6355 N.W. 36TH. ST., STE. 305
VIRGINIA GARDENS, FL. 33166
PHONE : (305) 871–1530 , FAX : (305) 871–1531
TEXAS LIC. # 90691
FIRM REGISTRATION # F–13790

40mm ER SLAT BERTHA ROLL–UP HURRICANE SHUTTER

AMERICAN SHUTTER SYSTEMS ASSOC., INC.
4268 WESTROADS DRIVE
WEST PALM BEACH, FL. 33407
PHONE: (877)999–2772 FAX: (561)209–8380

REV. No	DESCRIPTION	DATE	REV. No	DESCRIPTION	DATE
1	OLD 14-087	03/06/15	3		
2			4		

DRAWN BY: F.R.L.

03/06/15 DATE

15–013 DRAWING No

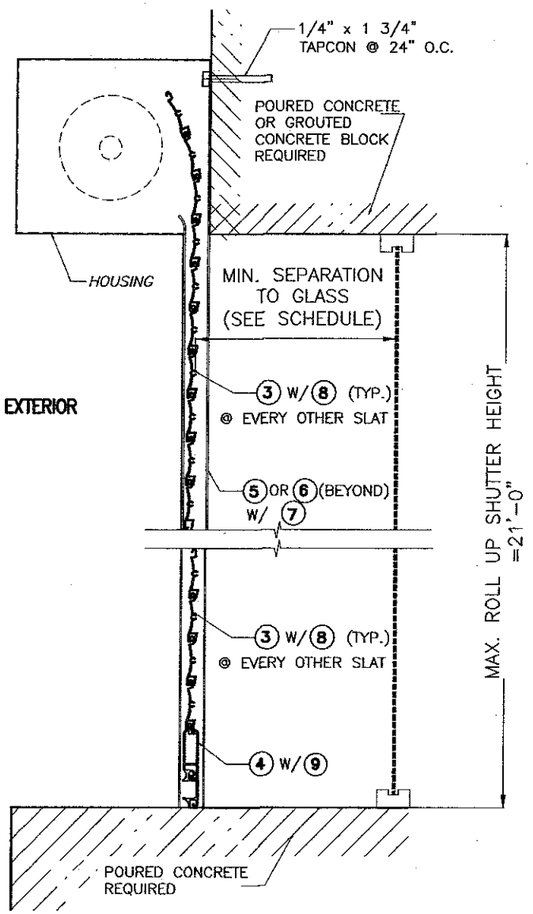

WALL MOUNTED

SECTION A'-A'

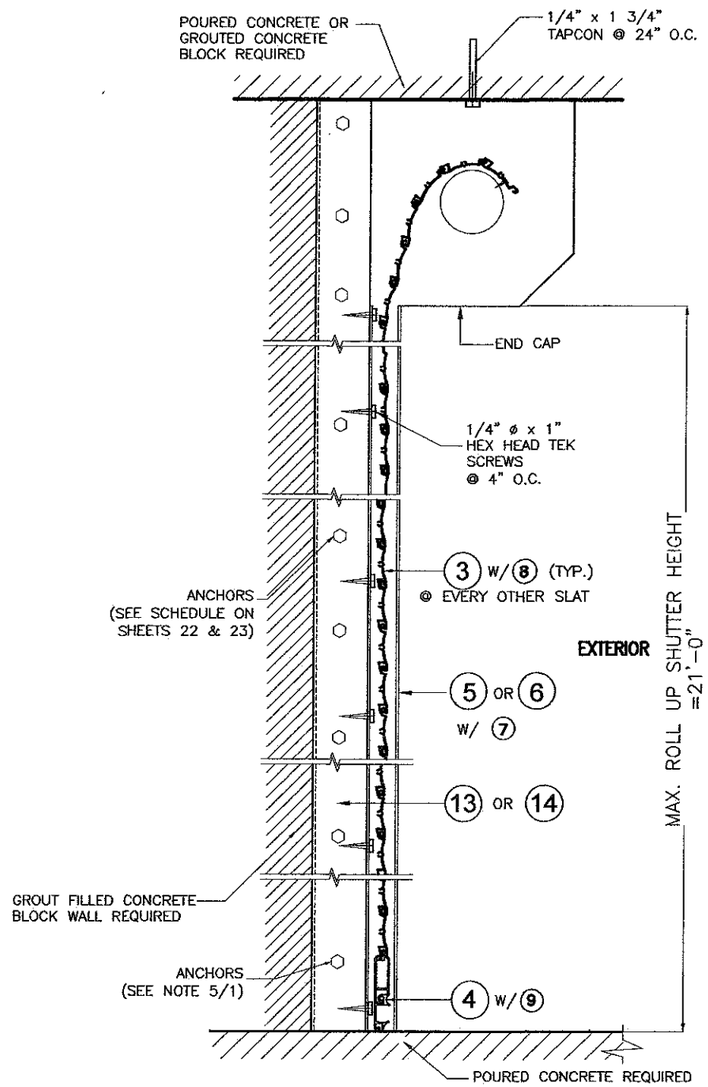

FLOOR/CEILING / TRAPPED MOUNTED

SECTION B'-B'

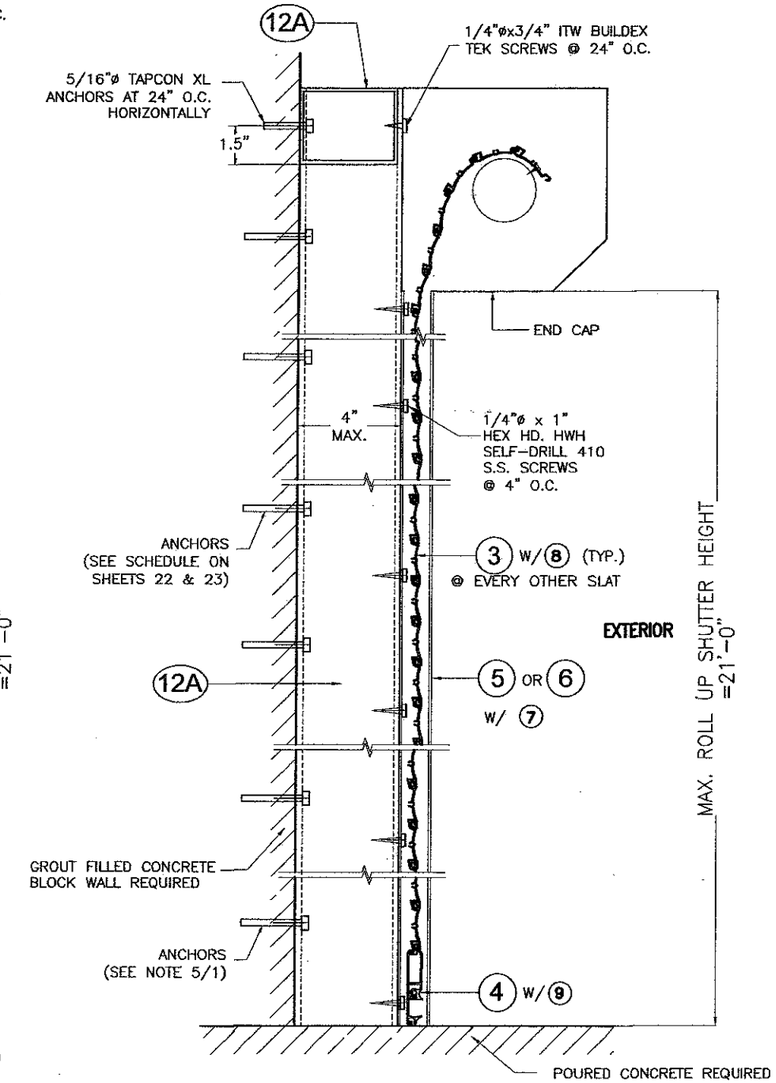

BUILD-OUT MOUNTED

SECTION C'-C'

INSTALLATION DETAILS ON EXISTING POURED CONCRETE OR GROUT FILLED CELL CONCRETE BLOCK BUILDINGS FOR SINGLE UNIT END RETENTION SYSTEM AS APPLICABLE

N.T.S.

TEXAS DEPARTMENT OF INSURANCE – 2006

STATE OF TEXAS
3/10/15
P.E. SEAL/SIGNATURE/DATE

WALTER A. TILLIT Jr. P.E.
PROFESSIONAL ENGINEER
6355 N.W. 36TH. ST., STE. 305
VIRGINIA GARDENS, FL. 33166
PHONE : (305) 871-1530 , FAX : (305) 871-1531
TEXAS LIC. # 90691
FIRM REGISTRATION # F-13790

40mm ER SLAT BERTHA ROLL-UP HURRICANE SHUTTER

AMERICAN SHUTTER SYSTEMS ASSOC., INC.
4268 WESTROADS DRIVE
WEST PALM BEACH, FL. 33407
PHONE: (877)999-2772 FAX: (561)209-8380

REV. No	DESCRIPTION	DATE	REV. No	DESCRIPTION	DATE
1	OLD 14-087	03/06/15	3		
2			4		

DRAWN BY: F.R.L.

03/06/15 DATE

15-013 DRAWING No

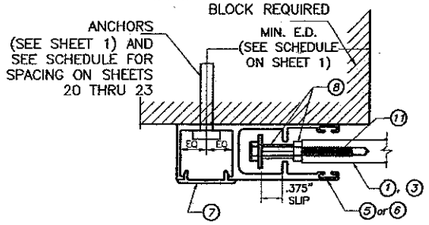

WALL MOUNT

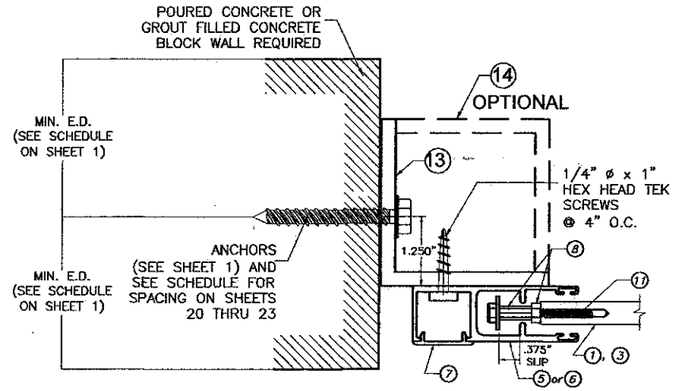

INSIDE/TRAPPED MOUNT

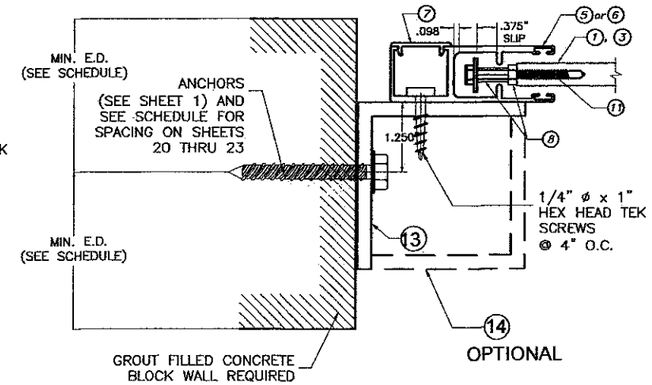

INSIDE/TRAPPED MOUNT (REVERSED)

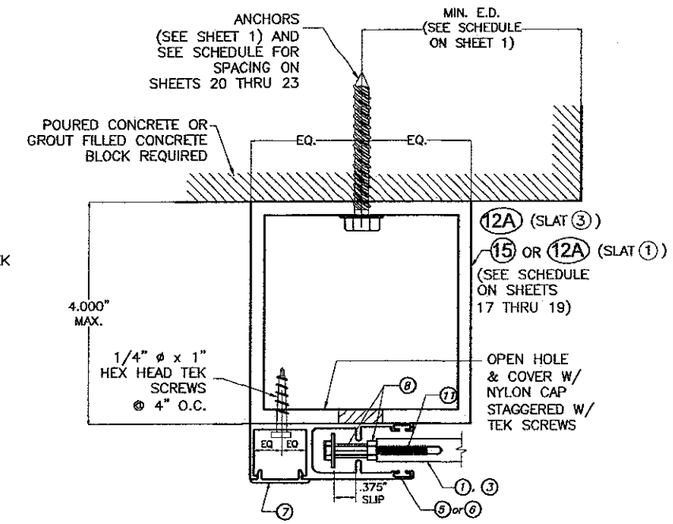

BUILD-OUT MOUNT

SECTIONS P-P (PLAN)

SIDE RAIL CONNECTIONS INTO EXISTING POURED CONCRETE OR GROUT FILLED BLOCK (AS APPLICABLE)

N.T.S.

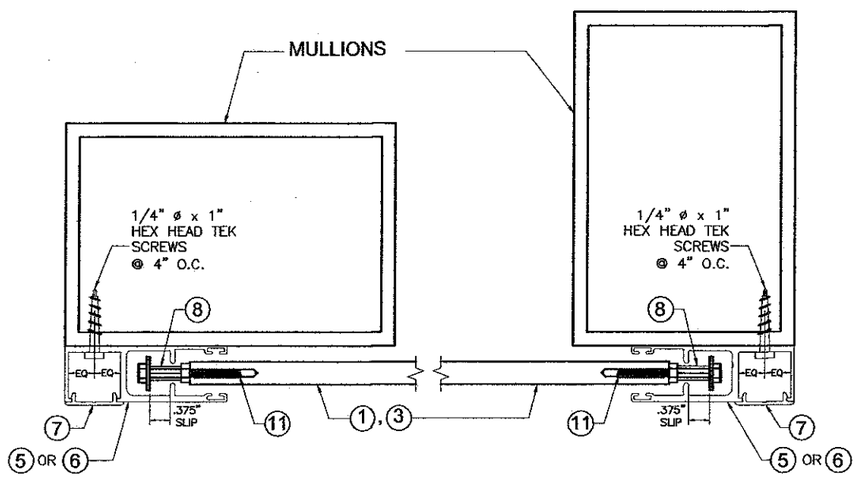

SECTION Q-Q (PLAN)

ORIENTATION #1

FACE MOUNT END MULLION

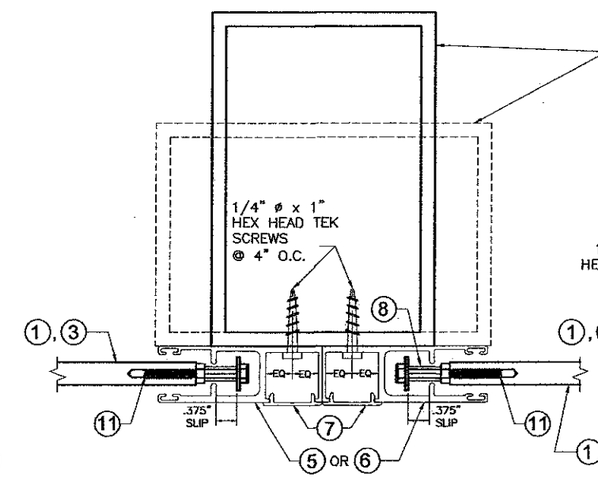

SECTION Q-Q (PLAN)

ORIENTATION #2

FACE MOUNT END MULLION

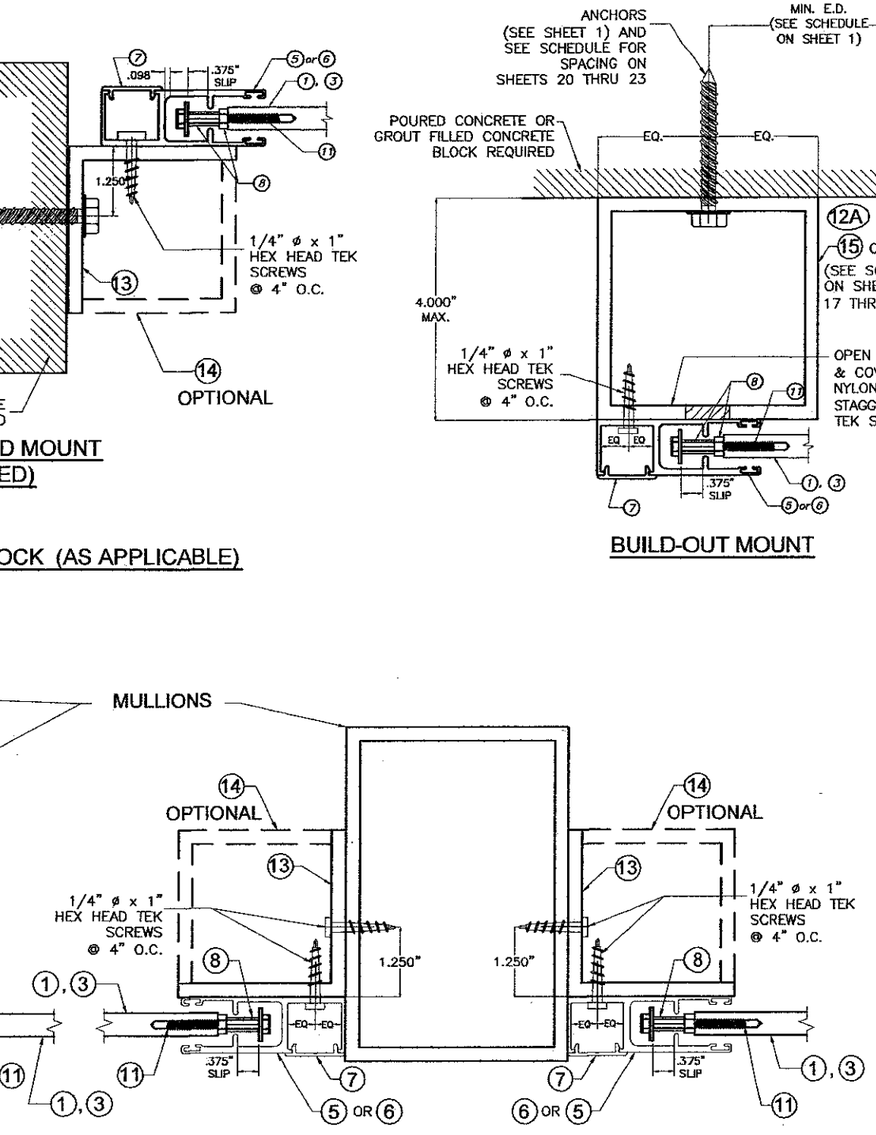

SECTION R-R (PLAN)

ORIENTATIONS #1 & #2

FACE MOUNT INTERIOR MULLION

SECTION R'-R' (PLAN)

ORIENTATION #2

TRAPPED MOUNT INTERIOR MULLION

SIDE RAIL CONNECTIONS INTO MULLIONS

N.T.S.

END RETENTION SYSTEM

TEXAS DEPARTMENT OF INSURANCE – 2006

STATE OF TEXAS

3/10/15

P.E. SEAL/SIGNATURE/DATE

WALTER A. TILLIT Jr. P.E.
PROFESSIONAL ENGINEER
6355 N.W. 36TH. ST., STE. 305
VIRGINA GARDENS, FL. 33166
PHONE : (305) 871-1530 , FAX : (305) 871-1531
TEXAS LIC. # 90691
FIRM REGISTRATION # F-13790

40mm ER SLAT BERTHA ROLL-UP HURRICANE SHUTTER

AMERICAN SHUTTER SYSTEMS ASSOC., INC.
4268 WESTROADS DRIVE
WEST PALM BEACH, FL. 33407
PHONE: (877)999-2772 FAX: (561)209-8380

REV. No	DESCRIPTION	DATE	REV. No	DESCRIPTION	DATE
1	OLD 14-087	03/06/15	3		
2			4		

DRAWN BY: F.R.L.

03/06/15 DATE

15-013 DRAWING No

SHEET 11 OF 29

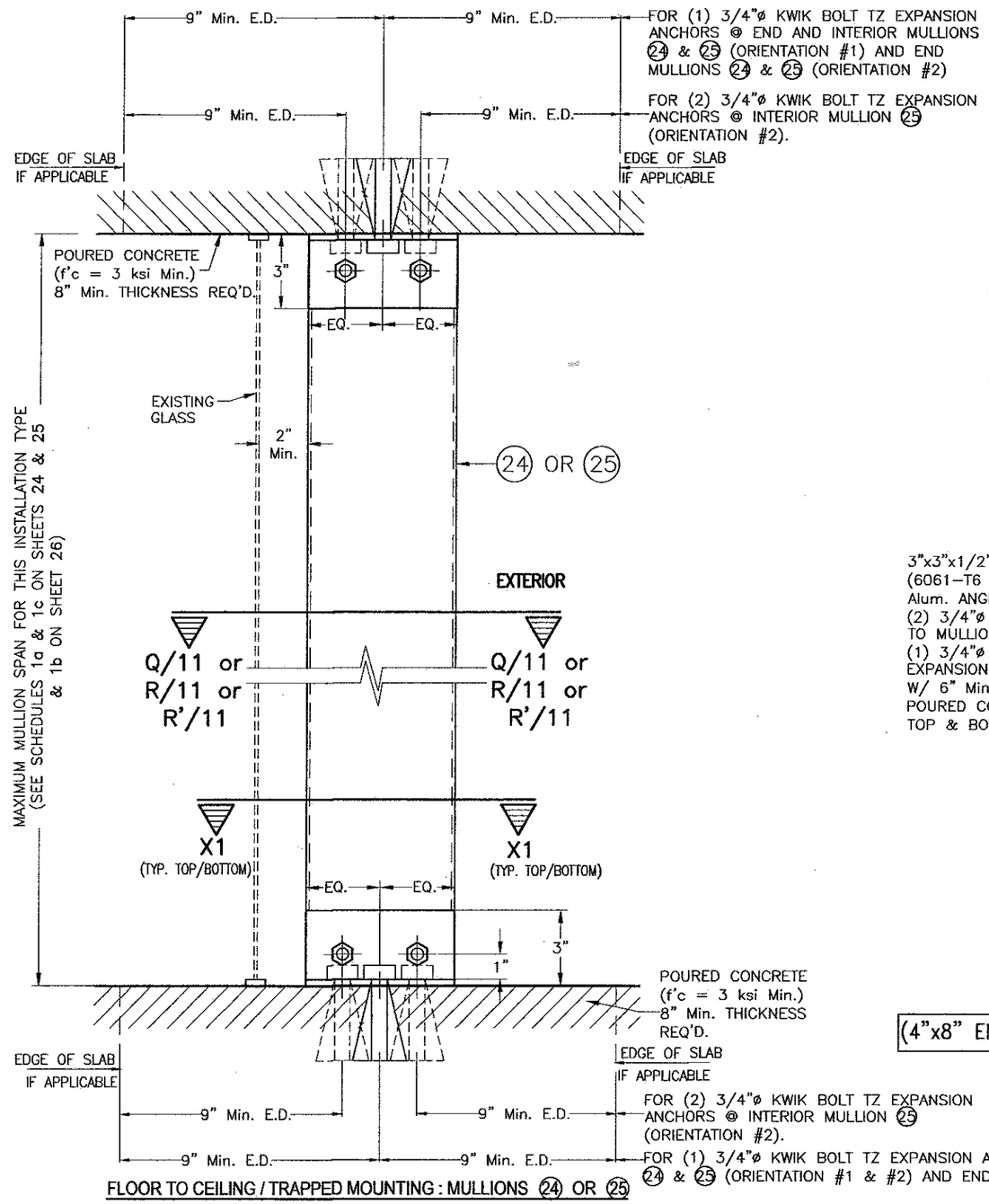

FLOOR TO CEILING / TRAPPED MOUNTING : MULLIONS 24 OR 25

SECTIONS W-1

END & INTERIOR TRAPPED MOUNTED MULLION INSTALLATION *

APPLICABLE TO ALL INSTALLATIONS EXCEPT THOSE W/ LIMITATIONS COVERED ON SHEET 13

SCALE: 1/8" = 1"

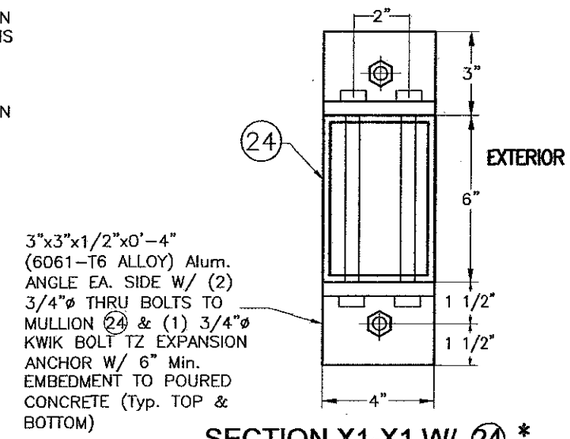

SECTION X1-X1 W/ 24 *

(4"x6" END & INTERIOR MULLION W/ ORIENTATION #1)

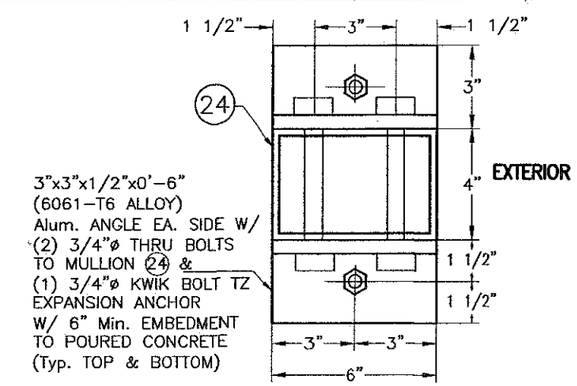

ALTERNATIVE SECTION X1-X1 W/ 24 *

(4"x6" END & INTERIOR MULLION W/ ORIENTATION #2)

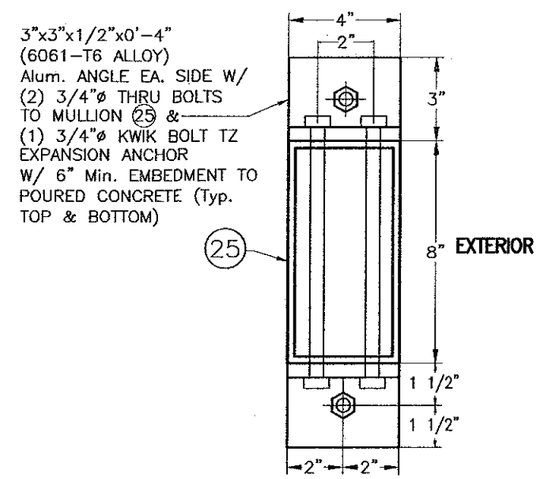

SECTION X1-X1 W/ 25 *

(4"x8" END & INTERIOR MULLION W/ ORIENTATION #1)

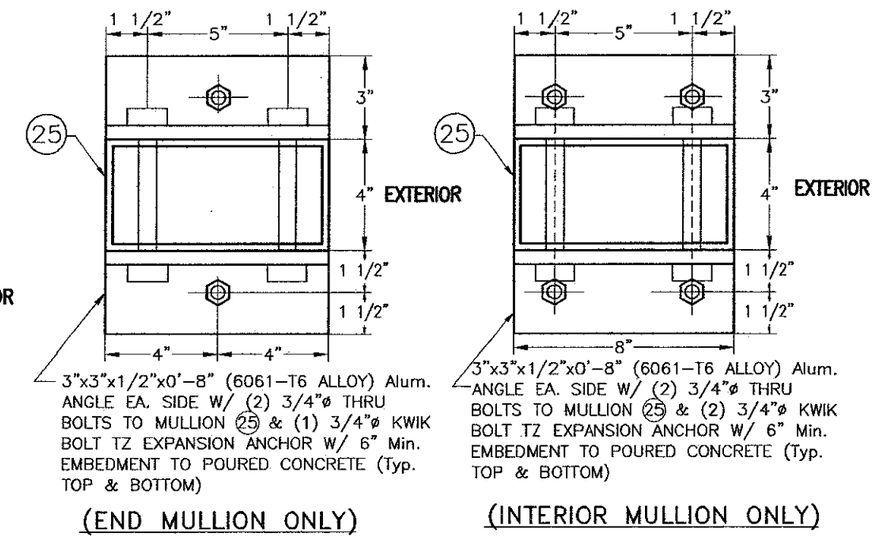

ALTERNATIVES SECTION X1-X1 W/ 25 *

(4"x8" END & INTERIOR MULLION W/ ORIENTATION #2)

* SIDE RAILS 5 & 6 AND BOX NOT SHOWN FOR CLARITY.

END RETENTION SYSTEM

TEXAS DEPARTMENT OF INSURANCE – 2006

STATE OF TEXAS
3/10/15
P.E. SEAL/SIGNATURE/DATE

WALTER A. TILLIT Jr. P.E.
PROFESSIONAL ENGINEER
6355 N.W. 36TH. ST., STE. 305
VIRGINIA GARDENS, FL. 33166
PHONE : (305) 871-1530 , FAX : (305) 871-1531
TEXAS LIC. # 90691
FIRM REGISTRATION # F-13790

40mm ER SLAT BERTHA ROLL-UP HURRICANE SHUTTER

AMERICAN SHUTTER SYSTEMS ASSOC., INC.
4268 WESTROADS DRIVE
WEST PALM BEACH, FL. 33407
PHONE: (877)999-2772 FAX: (561)209-8380

REV. No	DESCRIPTION	DATE	REV. No	DESCRIPTION	DATE
1	OLD 14-087	03/06/15	3		
2			4		

DRAWN BY: F.R.L.
03/06/15 DATE
15-013 DRAWING No
SHEET 12 OF 29

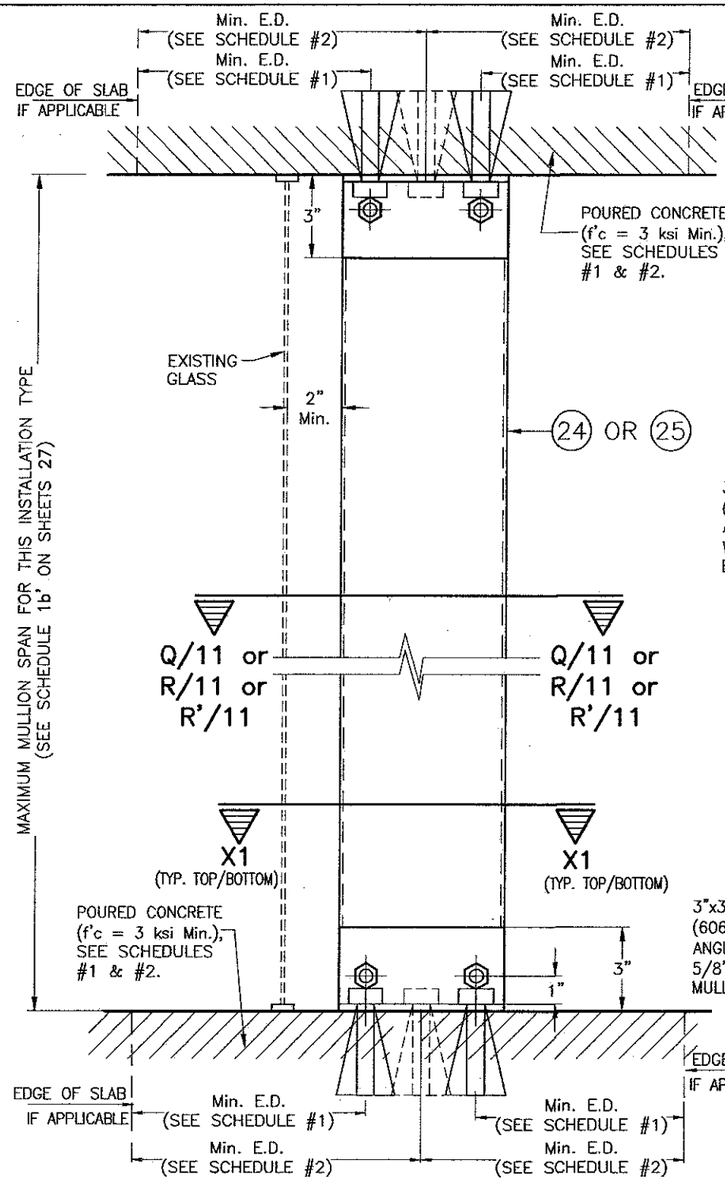

FLOOR TO CEILING / TRAPPED MOUNTING : MULLIONS 24 OR 25

SECTIONS W-1

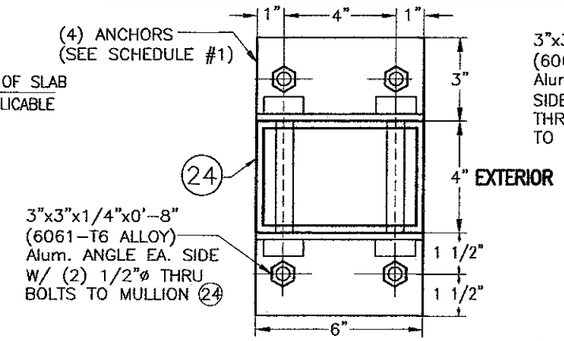

ALTERNATIVE SECTION X1-X1 W/ 24 *

(4"x6" INTERIOR MULLION ONLY W/ ORIENTATION # 2)

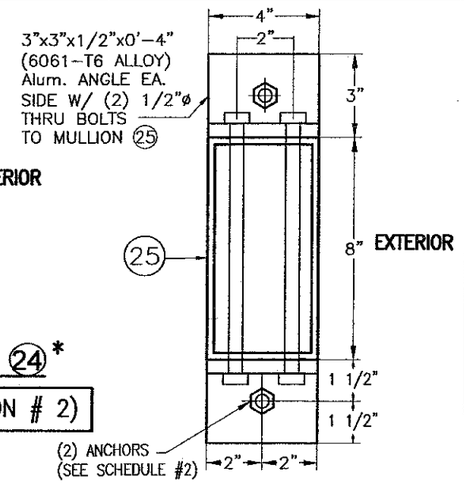

ALTERNATIVE SECTION X1-X1 W/ 25 *

(4"x8" END & INTERIOR MULLION W/ ORIENTATION # 1)

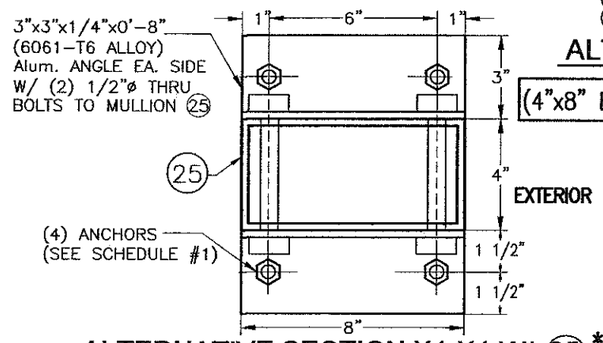

ALTERNATIVE SECTION X1-X1 W/ 25 *

(4"x8" INTERIOR MULLION ONLY W/ ORIENTATION # 2)

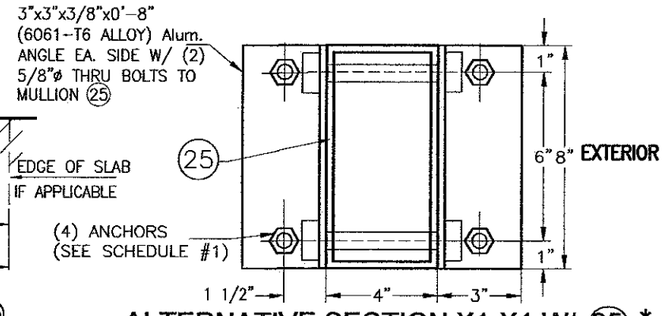

ALTERNATIVE SECTION X1-X1 W/ 25 *

(4"x8" END & INTERIOR MULLION W/ ORIENTATION # 1)

◊ SEE MAXIMUM 24 (INTERIOR) & 25 (END & INTERIOR) TRAPPED MOUNTED MULLIONS SPAN COVERED BY SCHEDULE 1b' FOR INSTALLATION CASES I, Ia & II ON SHEET 27

(LIMITED LOAD, MULLION SPACING AND SPAN INSTALLATION):

INSTALLATION CASE I – RESIDENTIAL AND COMMERCIAL APPLICATIONS W/ MAXIMUM A.S.D. DESIGN LOAD, MAXIMUM MULLION SPACING. SEE SCHEDULES #1 & #2 FOR ANCHOR SPECS.

INSTALLATION CASE Ia – RESIDENTIAL AND COMMERCIAL APPLICATION W/ MAXIMUM A.S.D. DESIGN LOAD, MAXIMUM MULLION SPACING. SEE SCHEDULES #1 & #2 FOR ANCHOR SPECS.

INSTALLATION CASE II – COMMERCIAL APPLICATION FOR MAXIMUM A.S.D. DESIGN LOAD, MAXIMUM MULLION SPACING. SEE SCHEDULES #1 & #2 FOR ANCHOR SPECS.

* SIDE RAILS 5 & 6 AND BOX NOT SHOWN FOR CLARITY.

SCHEDULE #1

INSTALLATION CASES	MIN. SLAB THICKNESS REQ'D.	ANCHOR TYPE & SIZE (TYP. TOP & BOTTOM)	MIN. ANCHOR EMBEDMENT	MIN. EDGE DISTANCE FOR ANCHOR
I	4"	3/8"ø HILTI INC KWIK HUS-H SCREW & 3/8"ø POWER FASTENER WEDGE-BOLT ANCHOR FOR 24 & 25 (INTERIOR) MULLIONS W/ ORIENTATION #2.	2 1/2"	5 1/2"
		1/2"ø HILTI INC KWIK HUS-H SCREW & 1/2"ø POWER FASTENER WEDGE- BOLT ANCHOR FOR 25 (END & INTERIOR) MULLION W/ ORIENTATION #1.	3"	6"
Ia	4"	1/2"ø HILTI INC KWIK BOLT TZ ONLY FOR 24 & 25 INTERIOR MULLIONS W/ ORIENTATION #2) & 25 (END MULLION W/ ORIENTATION #1).	2 1/2"	5 1/2"
		1/2"ø HILTI INC KWIK HUS-H SCREW & 1/2"ø POWER FASTENER WEDGE- BOLT ANCHOR FOR 24 & 25 (END OR INTERIOR MULLION) W/ ORIENTATIONS #1 OR #2.	3"	6"
II	6"	1/2"ø HILTI INC KWIK BOLT TZ ONLY FOR 24 & 25 INTERIOR MULLIONS W/ ORIENTATION #2) & 25 (END MULLION W/ ORIENTATION #1).	3 1/4"	7 1/2"
		1/2"ø HILTI INC KWIK HUS-H SCREW OR 1/2"ø POWER FASTENER WEDGE- BOLT ANCHOR SEE * NOTE ON SCHEDULE 1b' ON SHEET 25. VALID FOR END & INTERIOR MULLIONS 24 & 25 W/ ORIENTATIONS #1 OR #2.	3"	6"

SCHEDULE #2

INSTALLATION CASES	MIN. SLAB THICKNESS REQ'D.	ANCHOR TYPE & SIZE (TYP. TOP & BOTTOM)	MIN. ANCHOR EMBEDMENT	MIN. EDGE DISTANCE FOR ANCHOR
I, Ia & II	4"	5/8"ø HILTI INC KWIK HUS-H SCREW & 5/8"ø POWER FASTENER WEDGE-BOLT ANCHOR W/ ORIENTATION #1.	2 1/2"	7 1/2"

END RETENTION SYSTEM

◊ END & INTERIOR TRAPPED MOUNTED MULLION INSTALLATION *
APPLICABLE TO A LIMITED LOAD, MULLION SPAN AND MULLION SPACING INSTALLATIONS

SCALE: 1/8" = 1"

TEXAS DEPARTMENT OF INSURANCE – 2006

3/10/15

P.E. SEAL/SIGNATURE/DATE

WALTER A. TILLIT Jr. P.E.
PROFESSIONAL ENGINEER
6355 N.W. 36TH. ST., STE. 305
VIRGINIA GARDENS, FL. 33166
PHONE : (305) 871-1530 , FAX : (305) 871-1531
TEXAS LIC. # 90691
FIRM REGISTRATION # F-13790

40mm ER SLAT BERTHA ROLL-UP HURRICANE SHUTTER

AMERICAN SHUTTER SYSTEMS ASSOC., INC.
4268 WESTROADS DRIVE
WEST PALM BEACH, FL. 33407
PHONE: (877)999-2772 FAX: (561)209-8380

REV. No	DESCRIPTION	DATE	REV. No	DESCRIPTION	DATE
1	OLD 14-087	03/06/15	3		
2			4		

DRAWN BY: F.R.L.

03/06/15 DATE

15-013 DRAWING No

SHEET 13 OF 29

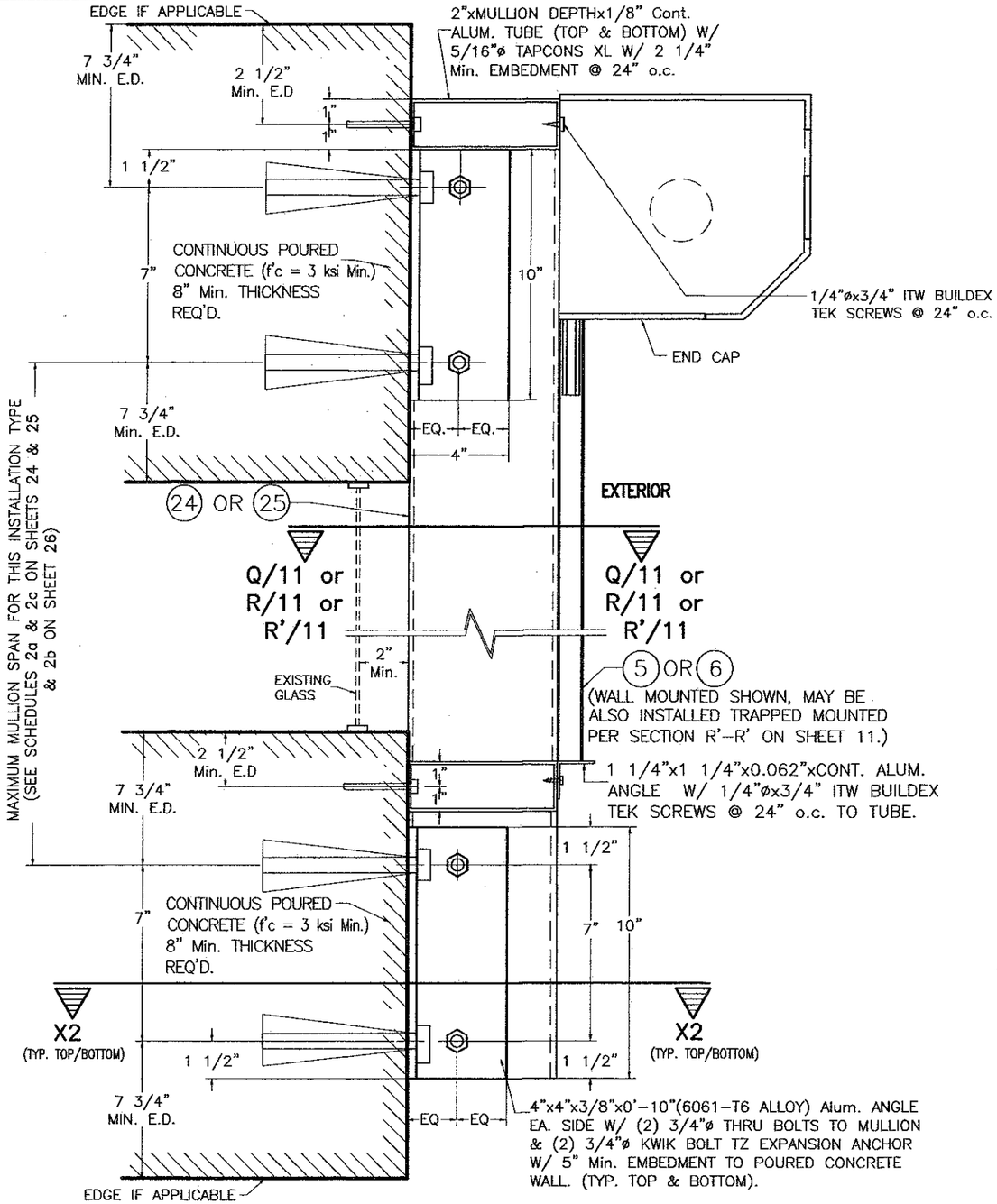

WALL MOUNTING : MULLIONS 24 OR 25
POURED CONCRETE WALL

SECTION W-2

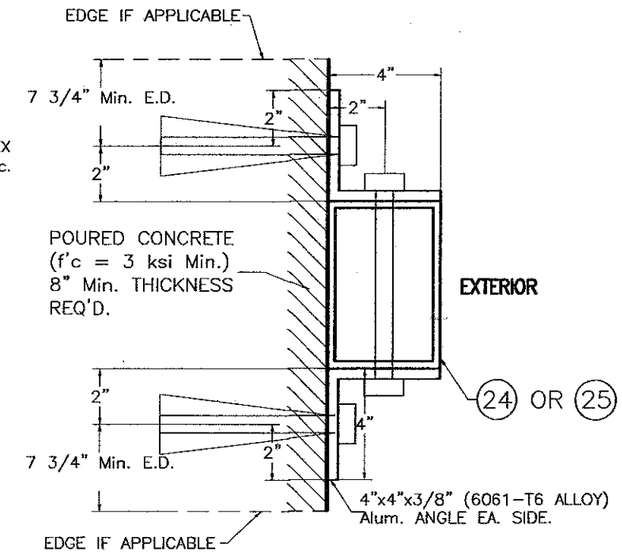

SECTION X2-X2 W/ 24 OR 25*
(END & INTERIOR MULLION)
(W/ ORIENTATION # 1)
(6"x4" or 8"x4")

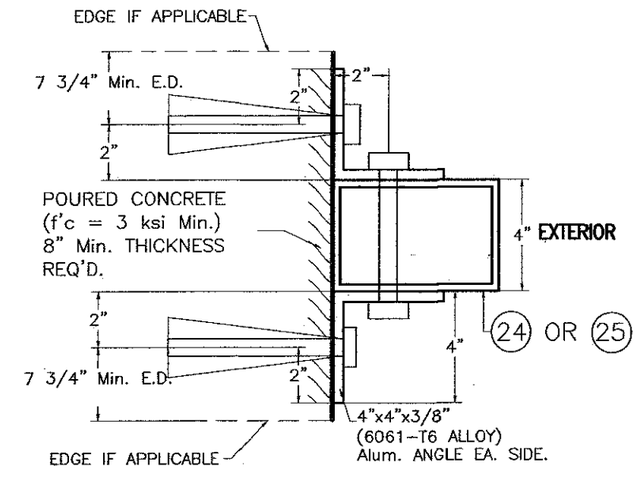

ALTERNATIVE SECTION X2-X2 W/ 24 OR 25*
(END & INTERIOR MULLION)
(W/ ORIENTATION # 2)
(4"x6" or 4"x8")

END RETENTION SYSTEM

END & INTERIOR WALL MOUNTED MULLION INSTALLATION
APPLICABLE TO ALL INSTALLATIONS EXCEPT THOSE W/ LIMITATIONS COVERED ON SHEET 15

SCALE: 1/8" = 1"

TEXAS DEPARTMENT OF INSURANCE – 2006

3/10/15
P.E. SEAL/SIGNATURE/DATE

WALTER A. TILLIT Jr. P.E.
PROFESSIONAL ENGINEER
6355 N.W. 36TH. ST., STE. 305
VIRGINIA GARDENS, FL. 33166
PHONE : (305) 871-1530 , FAX : (305) 871-1531
TEXAS LIC. # 90691
FIRM REGISTRATION # F-13790

40mm ER SLAT BERTHA ROLL-UP HURRICANE SHUTTER

AMERICAN SHUTTER SYSTEMS ASSOC., INC.
4268 WESTROADS DRIVE
WEST PALM BEACH, FL. 33407
PHONE: (877)999-2772 FAX: (561)209-8380

REV. No	DESCRIPTION	DATE	REV. No	DESCRIPTION	DATE
1	OLD 14-087	03/06/15	3		
2			4		

DRAWN BY: F.R.L.
03/06/15 DATE
15-013 DRAWING No
SHEET 14 OF 29

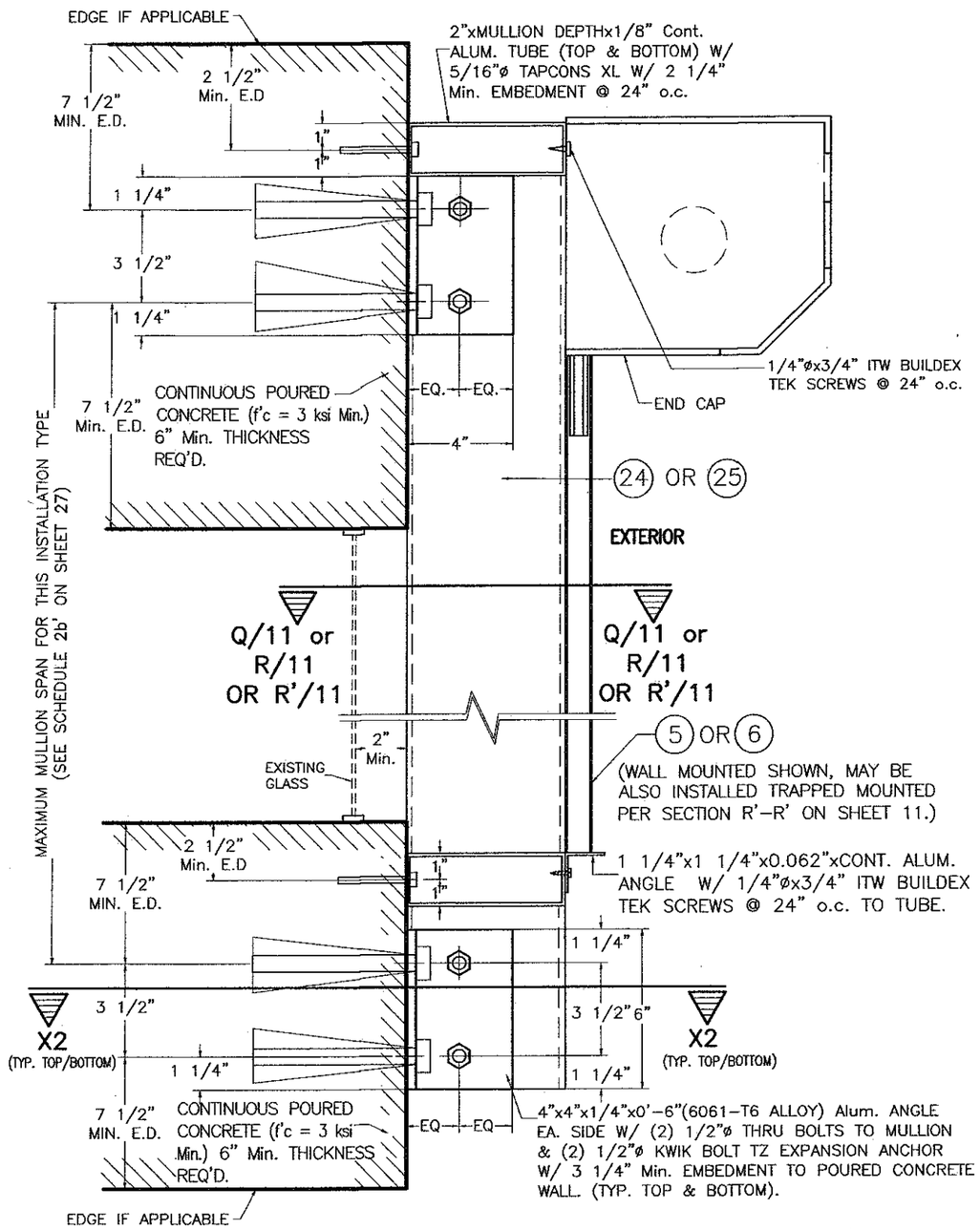

WALL MOUNTING : MULLIONS 24 OR 25
POURED CONCRETE WALL

SECTION W-2

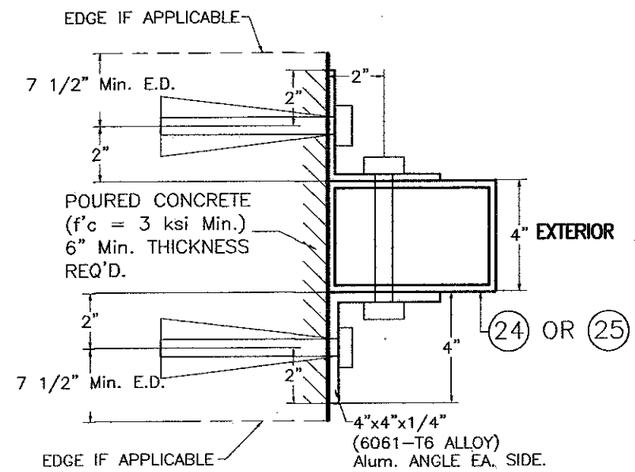

ALTERNATIVE SECTION X2-X2 W/ 24 OR 25 *

(INTERIOR MULLION)
(W/ ORIENTATION # 2)
(4"x6" or 4"x8")

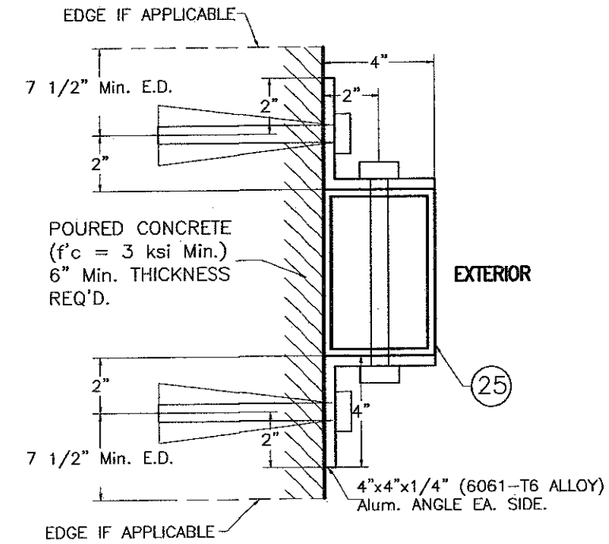

ALTERNATIVE SECTION X2-X2 W/ 25*

(END & INTERIOR MULLIONS)
(W/ ORIENTATION # 1)
(8"x4")

◊ SEE MAXIMUM 24 (INTERIOR) & 25 (END & INTERIOR) WALL MOUNTED MULLIONS SPAN COVERED BY SCHEDULE 2b' FOR INSTALLATION CASES I' & II' ON SHEET 27 (LIMITED LOAD, MULLION SPACING AND SPAN INSTALLATION):

INSTALLATION CASE I' – RESIDENTIAL AND COMMERCIAL APPLICATIONS W/ MAXIMUM A.S.D. DESIGN LOAD, MAXIMUM MULLION SPACING. VALID FOR CONNECTION TO CONCRETE W/ HILTI INC KWIK HUS-H OR POWER FASTENERS WEDGE-BOLT ANCHORS.

INSTALLATION CASE II' – COMMERCIAL APPLICATION FOR MAXIMUM A.S.D. DESIGN LOAD, MAXIMUM MULLION SPACING. VALID FOR CONNECTION TO CONCRETE W/ HILTI INC KWIK BOLT TZ ANCHORS.

END RETENTION SYSTEM

◊ END & INTERIOR WALL MOUNTED MULLION INSTALLATION

APPLICABLE TO A LIMITED LOAD, MULLION SPAN AND MULLION SPACING INSTALLATIONS

SCALE: 1/8" = 1"

TEXAS DEPARTMENT OF INSURANCE – 2006

STATE OF TEXAS
8/10/15
P.E. SEAL/SIGNATURE/DATE

WALTER A. TILLIT Jr. P.E.
PROFESSIONAL ENGINEER
6355 N.W. 36TH. ST., STE. 305
VIRGINIA GARDENS, FL. 33166
PHONE : (305) 871-1530 , FAX : (305) 871-1531
TEXAS LIC. # 90691
FIRM REGISTRATION # F-13790

40mm ER SLAT BERTHA ROLL-UP HURRICANE SHUTTER

AMERICAN SHUTTER SYSTEMS ASSOC., INC.
4268 WESTROADS DRIVE
WEST PALM BEACH, FL. 33407
PHONE: (877)999-2772 FAX: (561)209-8380

REV. No	DESCRIPTION	DATE	REV. No	DESCRIPTION	DATE
1	OLD 14-067	03/06/15	3		
2			4		

DRAWN BY: F.R.L.
03/06/15 DATE
15-013 DRAWING No
SHEET 15 OF 29

END RETENTION SYSTEM

TYPICAL MANDATORY PROCEDURE FOR VERIFYING PRODUCT CODE COMPLIANCE RELATED TO ITS INSTALLATION INTO EXISTING POURED CONCRETE OR GROUTED CONCRETE BLOCK STRUCTURES (VALID FOR SLATS 1 & 3)

STEP 1: OBTAIN JOB SITE'S A.S.D. DESIGN LOAD (p.s.f.) FOR THE OPENING AND DESIRED PRODUCT SPAN "L" (ft) TO PROTECT (SEE GENERAL NOTE #1, SHEET 1).

STEP 2: ENTER TO CHARTS **Ia, Ib & Ic** ON SHEETS 17 & 18 FOR SLAT 1, AND TO CHARTS **Ia, Ib & Ic** ON SHEET 19 FOR SLAT 3 TO DETERMINE, BASED ON SUBSTRATE, ANCHOR TYPE AT SIDE RAILS & A.S.D. DESIGN LOAD (p.s.f.); THE MAXIMUM SLAT SPAN "LMAX" (ft) AND THE REQUIRED SEPARATION TO GLASS.

STEP 3: OBTAIN INFORMATION ON PRODUCT'S SIDE RAIL ANCHOR SPACING REQUIREMENTS FOR CONNECTION TO EXISTING STRUCTURE FROM ANCHOR SCHEDULES IIa & IIb ON SHEETS 20 & 21 FOR SLAT 1 & FROM ANCHOR SCHEDULES IIa & IIb ON SHEETS 22 & 23 FOR SLAT 3. ENTER SCHEDULES WITH FINALLY DETERMINED ANCHOR TYPE, SUBSTRATE, MOUNTING TYPE, A.S.D. DESIGN LOAD & PRODUCT SPAN AND OBTAIN MAXIMUM ANCHOR SPACING (INCHES ON CENTERS). SEE GENERAL NOTE 5 ON SHEET 1 FOR ANCHOR SPECS.

STEP 4: IF PRODUCT INSTALLATION INCLUDES MULLIONS, THE FOLLOWING MANDATORY ADDITIONAL PROCEDURE IS APPLICABLE.

1. MINIMUM SEPARATION TO GLASS FOR SLATS IF MULLIONS ARE USED SHALL BE BASED ON INSTALLATIONS INDICATED ON CHARTS **Ic** ON SHEET 25 FOR SLAT 1 & ON SHEET 28 FOR SLAT 3. IT SHALL BE MEASURED FROM BACK OF SLAT TO GLASS.
2. ENTER SCHEDULES 1a, 2a, 1c, 2c, 1b, 2b, 1b' & 2b' ON SHEETS 24 THRU 27 W/ A.S.D. DESIGN LOAD ; MAXIMUM MULLION SPACING (MAX., 12', 8', 7' OR 6'-10") FOR SLAT 1 & SHEETS 28 & 29 FOR SLAT 3, AND DETERMINE MAXIMUM MULLION SPAN (HEIGHT) W/ ALLOWABLE INTERPOLATION IN BETWEEN SPACINGS FOR A GIVEN (24) 25), MULLION TYPE & MULLION ORIENTATION.
3. SEE SHEETS 12 THRU 15 FOR REQUIRED MULLION CONNECTION DETAILS AT TOP & BOTTOM FOR FLOOR TO CEILING (TRAPPED) OR WALL MOUNTINGS OF MULLIONS INTO CONCRETE FOR A GIVEN MULLION TYPE ((24),(25))

TEXAS DEPARTMENT OF INSURANCE – 2006

STATE OF TEXAS

3/10/15

P.E. SEAL/SIGNATURE/DATE

WALTER A. TILLIT Jr. P.E.
PROFESSIONAL ENGINEER
6355 N.W. 36TH. ST., STE. 305
VIRGINIA GARDENS, FL 33166
PHONE : (305) 871-1530 , FAX : (305) 871-1531
TEXAS LIC. # 90691
FIRM REGISTRATION # F-13790

40mm ER SLAT BERTHA ROLL-UP HURRICANE SHUTTER

AMERICAN SHUTTER SYSTEMS ASSOC., INC.
4268 WESTROADS DRIVE
WEST PALM BEACH, FL 33407
PHONE: (877)999-2772 FAX: (561)209-8380

REV. No	DESCRIPTION	DATE	REV. No	DESCRIPTION	DATE
1	OLD 14-087	03/06/15	3		
2			4		

DRAWN BY: F.R.L.

03/06/15 DATE

15-013 DRAWING No

SHEET 16 OF 29

SLAT ① PERFORMANCE CHART

POURED CONCRETE

SLAT PERFORMANCE CHARTS **Ia, Ib & Ic**: (ONLY VALID FOR 3/8" SLIP)
FOR A GIVEN A.S.D. DESIGN LOAD (p.s.f), PRODUCT MOUNT CONDITION INCLUDING ANCHOR TYPE

	CHART **Ia**						CHART **Ib**						CHART **Ic**
	USE MAXIMUM VALUE BETWEEN POSITIVE AND NEGATIVE A.S.D. LOAD												USE MAXIMUM POSITIVE A.S.D. LOAD VALUE
	3/8"Ø WEDGE BOLT ANCHOR						5/16"ø TAPCON XL, ULTRACON OR TAPPER +XTREME ANCHORS						
A.S.D. DESIGN LOAD (psf)	MAX. SLAT SPAN "$L_{MAX.}$" (FT)						MAX. SLAT SPAN "$L_{MAX.}$" (FT)						REQUIRED MIN. SEPARATION TO GLASS MEASURED TO BACK OF SLAT (in) SEE NOTES *
	WALL MOUNT SEE NOTES *	TRAPPED MOUNT SEE NOTES *	2" BUILD-OUT MOUNT W/ (12A) SEE NOTES *	4" BUILD-OUT MOUNT W/ (12A) SEE NOTES *	2" BUILD-OUT MOUNT W/ (15) SEE NOTES *	4" BUILD-OUT MOUNT W/ (15) SEE NOTES *	WALL MOUNT SEE NOTES *	TRAPPED MOUNT SEE NOTES *	2" BUILD-OUT MOUNT W/ (12A) SEE NOTES *	4" BUILD-OUT MOUNT W/ (12A) SEE NOTES *	2" BUILD-OUT MOUNT W/ (15) SEE NOTES *	4" BUILD-OUT MOUNT W/ (15) SEE NOTES *	
30.0	16'-0"	16'-0"	8'-0"	8'-0"	16'-0"	16'-0"	16'-0"	16'-0"	8'-0"	8'-0"	12'-0"	10'-3"	7 1/4"
35.0	16'-0"	16'-0"	8'-0"	8'-0"	16'-0"	15'-3"	16'-0"	15'-0"	8'-0"	8'-0"	11'-0"	9'-3"	7 1/4"
40.0	16'-0"	16'-0"	8'-0"	8'-0"	16'-0"	14'-0"	16'-0"	13'-6"	8'-0"	8'-0"	10'-0"	8'-5"	7 1/4"
45.0	16'-0"	15'-6"	8'-0"	8'-0"	15'-0"	13'-0"	15'-0"	12'-6"	8'-0"	7'-10"	9'-6"	7'-10"	7 1/4"
50.0	15'-5"	14'-11"	8'-0"	8'-0"	14'-0"	12'-3"	14'-4"	11'-6"	8'-0"	7'-4"	8'-9"	7'-4"	8 1/4"
55.0	14'-10"	14'-4"	8'-0"	8'-0"	13'-3"	11'-4"	13'-6"	10'-9"	8'-0"	6'-10"	8'-3"	6'-10"	8 1/4"
60.0	14'-3"	13'-9"	8'-0"	8'-0"	12'-3"	10'-9"	12'-6"	10'-0"	7'-9"	6'-6"	7'-9"	6'-6"	9"
65.0	13'-9"	13'-3"	8'-0"	8'-0"	11'-6"	10'-3"	12'-0"	9'-3"	7'-6"	6'-3"	7'-6"	6'-3"	9"
70.0	13'-1"	12'-7"	8'-0"	8'-0"	10'-9"	9'-9"	11'-0"	8'-9"	7'-3"	6'-0"	7'-3"	6'-0"	9"
75.0	12'-7"	12'-1"	8'-0"	8'-0"	10'-3"	9'-3"	10'-9"	8'-3"	7'-0"	5'-10"	7'-0"	5'-10"	9"
80.0	12'-0"	11'-6"	8'-0"	8'-0"	9'-9"	8'-9"	10'-4"	7'-10"	6'-9"	5'-9"	6'-9"	5'-9"	9"
85.0	11'-4"	10'-10"	–	–	–	–	9'-9"	7'-4"	–	–	–	–	8 1/2"
90.0	10'-9"	10'-3"	–	–	–	–	9'-6"	7'-0"	–	–	–	–	8"
95.0	10'-0"	9'-5"	–	–	–	–	8'-9"	6'-9"	–	–	–	–	8"
100.0	9'-5"	8'-11"	–	–	–	–	8'-0"	6'-8"	–	–	–	–	7 1/2"
105.0	8'-9"	8'-3"	–	–	–	–	7'-6"	6'-6"	–	–	–	–	7"
110.0	8'-1"	7'-7"	–	–	–	–	7'-4"	6'-3"	–	–	–	–	7"
115.0	7'-6"	7'-0"	–	–	–	–	7'-0"	6'-0"	–	–	–	–	6 5/8"
120.0	6'-10"	6'-10"	–	–	–	–	6'-10"	5'-0"	–	–	–	–	6 5/8"

SLAT SPAN DEFINITION

* **NOTES:**

1. ABOVE INDICATED MAX. SLAT SPANS MAY BE USED AS LONG AS ANCHOR SPACING SCHEDULES ON SHEET 20 INDICATE THAT AN ANCHOR SPACING IS AVAILABLE FOR THE CORRESPONDING SLAT SPAN AND A.S.D. DESIGN LOAD.
2. REQUIRES SIDE RAILS FASTENED TO EXISTING STRUCTURE WITH **3/8"ø WEDGE BOLT, 5/16"ø TAPCON XL, 5/16" ø ULTRACON OR 5/16" ø TAPPER+XTREME ANCHORS,** INTO POURED CONCRETE OR WITH 1/4"ø HEX HEAD HWH SELF-DRILL TEK SCREWS AT MULLIONS CONNECTION. VALID FOR WALL MOUNTED, TRAPPED MOUNTED, AND BUILD-OUT MOUNTED.
3. MAXIMUM SLAT SPANS FOR INTERMEDIATE LOADS MAY BE DETERMINED BY LINEAR INTERPOLATION BETWEEN END VALUES.
4. MIN. SEPARATION TO GLASS FOR WIND ZONES 1, 2 & 3 IS 1" AND AS SHOWN ON CHART Ic FOR WIND ZONE 4, PER ASTM E 1996.

END RETENTION SYSTEM INTO POURED CONCRETE

TEXAS DEPARTMENT OF INSURANCE – 2006

3/19/15
P.E. SEAL/SIGNATURE/DATE

WALTER A. TILLIT Jr. P.E.
PROFESSIONAL ENGINEER
6355 N.W. 36TH. ST., STE. 305
VIRGINIA GARDENS, FL. 33166
PHONE : (305) 871-1530 , FAX : (305) 871-1531
TEXAS LIC. # 90691
FIRM REGISTRATION # F-13790

40mm ER SLAT BERTHA ROLL-UP HURRICANE SHUTTER

AMERICAN SHUTTER SYSTEMS ASSOC., INC.
4268 WESTROADS DRIVE
WEST PALM BEACH, FL. 33407
PHONE: (877)999-2772 FAX: (561)209-8380

REV. No	DESCRIPTION	DATE	REV. No	DESCRIPTION	DATE
1	OLD 14-087	03/06/15	3		
2			4		

DRAWN BY: F.R.L.
03/06/15 DATE
15-013 DRAWING No
SHEET 17 OF 29

SLAT ① PERFORMANCE CHART

GROUTED CONCRETE BLOCK

SLAT PERFORMANCE CHARTS **Ia, Ib & Ic**: (ONLY VALID FOR 3/8" SLIP)
FOR A GIVEN A.S.D. DESIGN LOAD (p.s.f), PRODUCT MOUNT CONDITION INCLUDING ANCHOR TYPE

	CHART **Ia**						CHART **Ib**						CHART **Ic**
	USE MAXIMUM VALUE BETWEEN POSITIVE AND NEGATIVE A.S.D. LOAD												USE MAXIMUM POSITIVE A.S.D. LOAD VALUE
	3/8"Ø HILTI KWIK HUS BOLT ANCHOR						5/16"ø TAPCON XL, ULTRACON OR TAPPER+XTREME ANCHORS						
A.S.D. DESIGN LOAD (psf)	MAX. SLAT SPAN "$L_{MAX.}$" (FT)						MAX. SLAT SPAN "$L_{MAX.}$" (FT)						REQUIRED MIN. SEPARATION TO GLASS MEASURED TO BACK OF SLAT (in) SEE NOTES *
	WALL MOUNT SEE NOTES *	TRAPPED MOUNT SEE NOTES *	2" BUILD-OUT MOUNT W/ 12A SEE NOTES *	4" BUILD-OUT MOUNT W/ 12A SEE NOTES *	2" BUILD-OUT MOUNT W/ 15 SEE NOTES *	4" BUILD-OUT MOUNT W/ 15 SEE NOTES *	WALL MOUNT SEE NOTES *	TRAPPED MOUNT SEE NOTES *	2" BUILD-OUT MOUNT W/ 12A SEE NOTES *	4" BUILD-OUT MOUNT W/ 12A SEE NOTES *	2" BUILD-OUT MOUNT W/ 15 SEE NOTES *	4" BUILD-OUT MOUNT W/ 15 SEE NOTES *	
30.0	14'-7"	14'-7"	8'-0"	8'-0"	11'-0"	9'-7"	10'-6"	8'-0"	7'-3"	6'-6"	7'-6"	6'-10"	7 1/4"
35.0	13'-7"	13'-7"	8'-0"	8'-0"	10'-0"	8'-8"	9'-6"	7'-4"	6'-8"	6'-1"	7'-0"	6'-4"	7 1/4"
40.0	13'-0"	12'-6"	8'-0"	7'-6"	9'-4"	8'-0"	9'-0"	6'-8"	6'-3"	5'-10"	6'-6"	5'-9"	7 1/4"
45.0	12'-0"	11'-6"	8'-0"	7'-0"	8'-10"	7'-7"	8'-6"	6'-3"	6'-0"	5'-6"	6'-3"	5'-7"	7 1/4"
50.0	11'-1"	10'-6"	7'-9"	6'-6"	8'-4"	7'-2"	8'-0"	6'-0"	5'-9"	5'-3"	5'-11"	5'-4"	8 1/4"
55.0	10'-0"	9'-9"	7'-2"	6'-4"	7'-10"	6'-7"	7'-4"	5'-8"	5'-6"	5'-1"	5'-9"	5'-2"	8 1/4"
60.0	9'-6"	9'-3"	6'-10"	6'-0"	7'-6"	6'-4"	7'-0"	5'-5"	5'-3"	4'-11"	5'-6"	5'-0"	7 1/2"
65.0	9'-0"	8'-9"	6'-8"	5'-8"	7'-0"	6'-3"	6'-6"	5'-3"	5'-1"	4'-10"	5'-3"	4'-11"	7 1/2"
70.0	8'-6"	8'-3"	6'-6"	5'-6"	6'-9"	6'-0"	6'-4"	5'-0"	5'-0"	4'-8"	5'-0"	4'-10"	7 1/2"
75.0	8'-0"	7'-9"	6'-3"	5'-5"	6'-6"	5'-9"	6'-3"	4'-10"	4'-10"	4'-7"	4'-11"	4'-8"	7 1/2"
80.0	7'-6"	7'-3"	6'-0"	5'-4"	6'-0"	5'-6"	6'-0"	4'-8"	4'-8"	4'-6"	4'-10"	4'-7"	7 1/2"
85.0	7'-3"	7'-0"	–	–	–	–	5'-6"	4'-6"	–	–	–	–	6 5/8"
90.0	7'-0"	6'-9"	–	–	–	–	5'-0"	4'-4"	–	–	–	–	6 5/8"
95.0	7'-0"	6'-6"	–	–	–	–	4'-11"	4'-3"	–	–	–	–	6 5/8"
100.0	6'-9"	6'-4"	–	–	–	–	4'-10"	4'-2"	–	–	–	–	6 5/8"
105.0	6'-6"	6'-0"	–	–	–	–	4'-9"	4'-0"	–	–	–	–	6 5/8"
110.0	6'-6"	5'-9"	–	–	–	–	4'-8"	3'-11"	–	–	–	–	6 5/8"
115.0	6'-5"	5'-6"	–	–	–	–	4'-7"	3'-10"	–	–	–	–	6 5/8"
120.0	6'-3"	5'-3"	–	–	–	–	4'-6"	3'-9"	–	–	–	–	6 5/8"

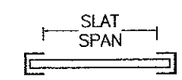

SLAT SPAN DEFINITION

* **NOTES:**

1. ABOVE INDICATED MAX. SLAT SPANS MAY BE USED AS LONG AS ANCHOR SPACING SCHEDULES ON SHEET 21 INDICATE THAT AN ANCHOR SPACING IS AVAILABLE FOR THE CORRESPONDING SLAT SPAN AND A.S.D. DESIGN LOAD.
2. REQUIRES SIDE RAILS FASTENED TO EXISTING STRUCTURE WITH **3/8"ø HILTI KWIK HUS BOLT, 5/16"ø TAPCON XL, 5/16" ø ULTRACON OR 5/16" ø TAPPER+XTREME ANCHORS** INTO GROUTED CONCRETE BLOCK OR WITH 1/4"ø HEX HD. HWH SELF-DRILL TEK SCREWS AT MULLIONS CONNECTION. VALID FOR WALL MOUNTED, TRAPPED MOUNTED, AND BUILD-OUT MOUNTED.
3. MAXIMUM SLAT SPANS FOR INTERMEDIATE LOADS MAY BE DETERMINED BY LINEAR INTERPOLATION BETWEEN END VALUES.
4. MIN. SEPARATION TO GLASS FOR WIND ZONES 1, 2 & 3 IS 1" AND AS SHOWN ON CHART Ic FOR WIND ZONE 4, PER ASTM E 1996.

END RETENTION SYSTEM INTO GROUTED CONCRETE BLOCK

TEXAS DEPARTMENT OF INSURANCE – 2006

STATE OF TEXAS
3/10/15
P.E. SEAL/SIGNATURE/DATE

WALTER A. TILLIT Jr. P.E.
PROFESSIONAL ENGINEER
6355 N.W. 36TH. ST., STE. 305
VIRGINIA GARDENS, FL. 33166
PHONE : (305) 871-1530 , FAX : (305) 871-1531
TEXAS LIC. # 90691
FIRM REGISTRATION # F-13790

40mm ER SLAT BERTHA ROLL-UP HURRICANE SHUTTER

AMERICAN SHUTTER SYSTEMS ASSOC., INC.
4268 WESTROADS DRIVE
WEST PALM BEACH, FL. 33407
PHONE: (877)999-2772 FAX: (561)209-8380

REV. No	DESCRIPTION	DATE	REV. No	DESCRIPTION	DATE
1	OLD 14-087	03/06/15	3		
2			4		

DRAWN BY: F.R.L.
03/06/15 DATE
15-013 DRAWING No
SHEET 18 OF 29

SLAT ③ PERFORMANCE CHARTS

POURED CONCRETE

SLAT PERFORMANCE CHARTS **Ia, Ib & Ic**: (ONLY VALID FOR 3/8" SLIP)
FOR A GIVEN A.S.D. DESIGN LOAD (p.s.f), PRODUCT MOUNT CONDITION INCLUDING ANCHOR TYPE

	CHART **Ia**				CHART **Ib**				CHART **Ic**
	USE MAXIMUM VALUE BETWEEN POSITIVE AND NEGATIVE A.S.D. LOAD								USE MAXIMUM POSITIVE A.S.D. LOAD VALUE
	3/8"Ø WEDGE BOLTS ANCHOR				5/16"ø TAPCON XL ANCHORS				
A.S.D. DESIGN LOAD (psf)	MAX. SLAT SPAN "$L_{MAX.}$" (FT)				MAX. SLAT SPAN "$L_{MAX.}$" (FT)				REQUIRED MIN. SEPARATION TO GLASS MEASURED TO BACK OF SLAT (in) SEE NOTES *
	WALL MOUNT SEE NOTES *	TRAPPED MOUNT SEE NOTES *	2" BUILD-OUT MOUNT W/ 12A SEE NOTES *	4" BUILD-OUT MOUNT W/ 12A SEE NOTES *	WALL MOUNT SEE NOTES *	TRAPPED MOUNT SEE NOTES *	2" BUILD-OUT MOUNT W/ 12A SEE NOTES *	4" BUILD-OUT MOUNT W/ 12A SEE NOTES *	
30.0	8'-4"	8'-4"	8'-4"	8'-4"	8'-4"	8'-4"	8'-4"	8'-4"	6 3/4"
35.0	8'-4"	8'-4"	8'-4"	8'-4"	8'-4"	8'-4"	8'-4"	8'-4"	6 3/4"
40.0	8'-4"	8'-4"	8'-4"	8'-4"	8'-4"	8'-4"	8'-4"	8'-4"	6 3/4"
45.0	8'-4"	8'-4"	8'-4"	8'-4"	8'-4"	8'-4"	8'-4"	8'-0"	6 3/4"
50.0	8'-4"	8'-4"	8'-4"	8'-4"	8'-4"	8'-4"	8'-4"	7'-6"	6 3/4"
55.0	8'-4"	8'-4"	8'-4"	8'-4"	8'-4"	8'-4"	8'-4"	7'-0"	6 3/4"
60.0	8'-4"	8'-4"	8'-4"	8'-4"	8'-4"	8'-4"	8'-4"	6'-8"	6 3/4"
65.0	7'-9"	7'-9"	7'-9"	7'-9"	7'-9"	7'-9"	7'-9"	6'-5"	6 5/8"
70.0	7'-5"	7'-5"	7'-5"	7'-5"	7'-5"	7'-5"	7'-5"	6'-0"	6 3/8"
75.0	7'-0"	7'-0"	7'-0"	7'-0"	7'-0"	7'-0"	7'-0"	5'-10"	6 1/4"
80.0	6'-10"	6'-10"	6'-10"	6'-10"	6'-10"	6'-10"	6'-10"	5'-8"	6 1/8"

* **NOTES:**

1. ABOVE INDICATED MAX. SLAT SPANS MAY BE USED AS LONG AS ANCHOR SPACING SCHEDULES ON SHEET 22 INDICATE THAT AN ANCHOR SPACING IS AVAILABLE FOR THE CORRESPONDING SLAT SPAN AND A.S.D. DESIGN LOAD.
2. REQUIRES SIDE RAILS FASTENED TO EXISTING STRUCTURE WITH **3/8"ø WEDGE BOLTS ANCHOR OR 5/16"ø TAPCON XL ANCHOR,** INTO POURED CONCRETE OR WITH 1/4"ø HEX HD. HWH SELF-DRILL 410 S.S. SCREWS AT MULLIONS CONNECTION. VALID FOR WALL MOUNTED, TRAPPED MOUNTED, AND BUILD-OUT MOUNTED.
3. MAXIMUM SLAT SPANS FOR INTERMEDIATE LOADS MAY BE DETERMINED BY LINEAR INTERPOLATION BETWEEN END VALUES.
4. MIN. SEPARATION TO GLASS FOR WIND ZONES 1, 2 & 3 IS 1" AND AS SHOWN ON CHART Ic FOR WIND ZONE 4, PER ASTM E 1996.

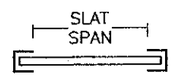

SLAT SPAN DEFINITION

GROUTED CONCRETE BLOCK

SLAT PERFORMANCE CHARTS **Ia, Ib & Ic**: (ONLY VALID FOR 3/8" SLIP)
FOR A GIVEN A.S.D. DESIGN LOAD (p.s.f), PRODUCT MOUNT CONDITION INCLUDING ANCHOR TYPE

	CHART **Ia**				CHART **Ib**				CHART **Ic**
	USE MAXIMUM VALUE BETWEEN POSITIVE AND NEGATIVE A.S.D. LOAD								USE MAXIMUM POSITIVE A.S.D. LOAD VALUE
	3/8"Ø HILTI KWIK HUS BOLT ANCHOR				5/16"ø TAPCON XL ANCHORS				
A.S.D. DESIGN LOAD (psf)	MAX. SLAT SPAN "$L_{MAX.}$" (FT)				MAX. SLAT SPAN "$L_{MAX.}$" (FT)				REQUIRED MIN. SEPARATION TO GLASS MEASURED TO BACK OF SLAT (in) SEE NOTES *
	WALL MOUNT SEE NOTES *	TRAPPED MOUNT SEE NOTES *	2" BUILD-OUT MOUNT W/ 12A SEE NOTES *	4" BUILD-OUT MOUNT W/ 12A SEE NOTES *	WALL MOUNT SEE NOTES *	TRAPPED MOUNT SEE NOTES *	2" BUILD-OUT MOUNT W/ 12A SEE NOTES *	4" BUILD-OUT MOUNT W/ 12A SEE NOTES *	
30.0	8'-4"	8'-4"	8'-4"	8'-4"	8'-4"	8'-4"	7'-9"	6'-4"	6 3/4"
35.0	8'-4"	8'-4"	8'-4"	7'-7"	8'-4"	8'-4"	7'-0"	5'-10"	6 3/4"
40.0	8'-4"	8'-4"	8'-4"	7'-0"	8'-4"	8'-4"	6'-6"	5'-6"	6 3/4"
45.0	8'-4"	8'-4"	8'-0"	6'-6"	8'-4"	8'-4"	6'-0"	5'-2"	6 3/4"
50.0	8'-4"	8'-4"	7'-6"	6'-2"	8'-4"	8'-4"	5'-9"	4'-10"	6 3/4"
55.0	8'-4"	8'-4"	7'-0"	5'-10"	8'-4"	8'-4"	5'-5"	4'-9"	6 3/4"
60.0	8'-4"	8'-4"	6'-8"	5'-7"	8'-4"	8'-4"	5'-2"	4'-7"	6 3/4"
65.0	7'-9"	7'-9"	6'-4"	5'-4"	7'-9"	7'-9"	5'-0"	4'-5"	6 5/8"
70.0	7'-5"	7'-5"	6'-0"	5'-0"	7'-5"	7'-5"	4'-10"	4'-3"	6 3/8"
75.0	7'-0"	7'-0"	5'-10"	4'-11"	7'-0"	7'-0"	4'-7"	4'-2"	6 1/4"
80.0	6'-10"	6'-10"	5'-7"	4'-9"	6'-10"	6'-10"	4'-6"	4'-0"	6 1/8"

* **NOTES:**

1. ABOVE INDICATED MAX. SLAT SPANS MAY BE USED AS LONG AS ANCHOR SPACING SCHEDULES ON SHEET 23 INDICATE THAT AN ANCHOR SPACING IS AVAILABLE FOR THE CORRESPONDING SLAT SPAN AND A.S.D. DESIGN LOAD.
2. REQUIRES SIDE RAILS FASTENED TO EXISTING STRUCTURE WITH **3/8"ø HILTI KWIK HUS BOLT ANCHOR OR 5/16"ø TAPCON XL ANCHOR** INTO GROUTED CONCRETE BLOCK OR WITH 1/4"ø HEX HD. HWH SELF-DRILL 410 S.S. SCREWS AT MULLIONS CONNECTION. VALID FOR WALL MOUNTED, TRAPPED MOUNTED, AND BUILD-OUT MOUNTED.
3. MAXIMUM SLAT SPANS FOR INTERMEDIATE LOADS MAY BE DETERMINED BY LINEAR INTERPOLATION BETWEEN END VALUES.
4. MIN. SEPARATION TO GLASS FOR WIND ZONES 1, 2 & 3 IS 1" AND AS SHOWN ON CHART Ic FOR WIND ZONE 4, PER ASTM E 1996.

END RETENTION SYSTEM

INTO CONCRETE OR GROUTED CONCRETE BLOCK

TEXAS DEPARTMENT OF INSURANCE – 2006

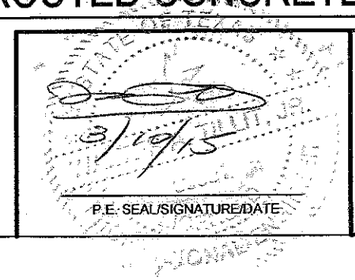

WALTER A. TILLIT Jr. P.E.
PROFESSIONAL ENGINEER
6355 N.W. 36TH. ST., STE. 305
VIRGINIA GARDENS, FL. 33166
PHONE : (305) 871-1530 , FAX : (305) 871-1531
TEXAS LIC. # 90691
FIRM REGISTRATION # F-13790

40mm ER SLAT BERTHA ROLL-UP HURRICANE SHUTTER

AMERICAN SHUTTER SYSTEMS ASSOC., INC.
4268 WESTROADS DRIVE
WEST PALM BEACH, FL 33407
PHONE: (877)999-2772 FAX: (561)209-8380

REV. No	DESCRIPTION	DATE	REV. No	DESCRIPTION	DATE
1	OLD 14-087	03/06/15	3		
2			4		

DRAWN BY: F.R.L.
DATE: 03/06/15
DRAWING No: 15-013
SHEET 19 OF 29

END RETENTION SYSTEM W/ SLAT (1)

MAX. ANCHOR'S SPACING SCHEDULE IIa

FOR A GIVEN PRODUCT MOUNTING TYPE, W/ 3/8"Ø WEDGE BOLT ANCHORS TO POURED CONCRETE WALL , A.S.D. DESIGN LOAD & SLAT SPAN RANGE †

WALL MOUNT

A.S.D. DESIGN LOAD RANGE (p.s.f.)	SLAT SPAN RANGE						
	0'–4' †	> 4'–5' †	> 5'–6' †	> 6'–7' †	> 7'–9' †	> 9'–12' †	> 12'–16' †
≤ 30.0	9"	9"	9"	9"	9"	9"	9"
>30–40	8"	8"	8"	8"	8"	8"	8"
>40–60	7"	7"	7"	7"	7"	7"	7"
>60–80	6 1/2"	6 1/2"	6 1/2"	6 1/2"	6 1/2"	6 1/2"	–
>80–105	7 1/2"	7 1/2"	7 1/2"	7 1/2"	7 1/2"	–	–
>105–120	9"	9"	9"	9"	–	–	–

TRAPPED MOUNT

A.S.D. DESIGN LOAD RANGE (p.s.f.)	SLAT SPAN RANGE						
	0'–4' †	> 4'–5' †	> 5'–6' †	> 6'–7' †	> 7'–9' †	> 9'–12' †	> 12'–16' †
≤ 30.0	6"	6"	6"	6"	6"	6"	6"
>30–40	6"	6"	6"	6"	6"	6"	6"
>40–60	4 1/2"	4 1/2"	4 1/2"	4 1/2"	4 1/2"	4 1/2"	4 1/2"
>60–80	4 1/2"	4 1/2"	4 1/2"	4 1/2"	4 1/2"	4 1/2"	–
>80–105	5"	5"	5"	5"	5"	–	–
>105–120	6"	6"	6"	6"	–	–	–

SLAT SPAN DEFINITION

† NOTE:
MAX. SLAT SPAN FOR A GIVEN A.S.D. DESIGN LOAD SHALL NEVER EXCEED MAX. SLAT SPAN INDICATED ON SLAT PERFORMANCE CHART ON SHEET 17.

BUILD-OUT MOUNT W/ (12A)

A.S.D. DESIGN LOAD RANGE (p.s.f.)	SLAT SPAN RANGE									
	0'–4' †		> 4'–5' †		> 5'–6' †		> 6'–7' †		> 7'–8' †	
	2" B.O	4" B.O	2" B.O	4" B.O	2" B.O	4" B.O	2" B.O	4" B.O	2" B.O	4" B.O
≤ 30.0	6"	4 1/2"	6"	4 1/2"	6"	4 1/2"	6"	4 1/2"	6"	4 1/2"
>30–40	5"	4 1/2"	5"	4 1/2"	5"	4 1/2"	5"	4 1/2"	5"	4 1/2"
>40–60	5"	4"	5"	4"	5"	4"	5"	4"	5"	4"
>60–80	5"	4"	5"	4"	5"	4"	5"	4"	5"	4"

BUILD-OUT MOUNT W/ (15)

A.S.D. DESIGN LOAD RANGE (p.s.f.)	SLAT SPAN RANGE													
	0'–4' †		> 4'–5' †		> 5'–6' †		> 6'–7' †		> 7'–9' †		> 9'–12' †		> 12'–16' †	
	2" B.O	4" B.O	2" B.O	4" B.O	2" B.O	4" B.O	2" B.O	4" B.O	2" B.O	4" B.O	2" B.O	4" B.O	2" B.O	4" B.O
≤ 30.0	5"	5"	5"	5"	5"	5"	5"	5"	5"	5"	5"	5"	5"	5"
>30–40	5"	5"	5"	5"	5"	5"	5"	5"	5"	5"	5"	5"	5"	5"
>40–60	5"	5"	5"	5"	5"	5"	5"	5"	5"	5"	5"	5"	5"	–
>60–80	5"	5"	5"	5"	5"	5"	5"	5"	5"	5"	5"	–	–	–

MAX. ANCHOR'S SPACING SCHEDULE IIa

FOR A GIVEN PRODUCT MOUNTING TYPE, W/ 5/16"Ø TAPCON XL, ULTRACON OR TAPPER+XTREME ANCHORS TO POURED CONCRETE WALL , A.S.D. DESIGN LOAD & SLAT SPAN RANGE †

WALL MOUNT

A.S.D. DESIGN LOAD RANGE (p.s.f.)	SLAT SPAN RANGE						
	0'–4' †	> 4'–5' †	> 5'–6' †	> 6'–7' †	> 7'–9' †	> 9'–12' †	> 12'–16' †
≤ 30.0	4 1/2"	4 1/2"	4 1/2"	4 1/2"	4 1/2"	4 1/2"	4 1/2"
>30–40	3 1/2"	3 1/2"	3 1/2"	3 1/2"	3 1/2"	3 1/2"	3 1/2"
>40–60	3 1/2"	3 1/2"	3 1/2"	3 1/2"	3 1/2"	3 1/2"	3 1/2"
>60–80	3 1/2"	3 1/2"	3 1/2"	3 1/2"	3 1/2"	3 1/2"	3 1/2"
>80–105	4"	4"	4"	4"	4"	–	–
>105–120	4"	4"	4"	4"	–	–	–

TRAPPED MOUNT

A.S.D. DESIGN LOAD RANGE (p.s.f.)	SLAT SPAN RANGE						
	0'–4' †	> 4'–5' †	> 5'–6' †	> 6'–7' †	> 7'–9' †	> 9'–12' †	> 12'–16' †
≤ 30.0	5"	5"	5"	5"	5"	5"	5"
>30–40	4"	4"	4"	4"	4"	4"	4"
>40–60	3 1/2"	3 1/2"	3 1/2"	3 1/2"	3 1/2"	3 1/2"	3 1/2"
>60–80	3 1/2"	3 1/2"	3 1/2"	3 1/2"	3 1/2"	3 1/2"	–
>80–105	4"	4"	4"	4"	4"	–	–
>105–120	4"	4"	4"	4"	–	–	–

BUILD-OUT MOUNT W/ (12A)

A.S.D. DESIGN LOAD RANGE (p.s.f.)	SLAT SPAN RANGE									
	0'–4' †		> 4'–5' †		> 5'–6' †		> 6'–7' †		> 7'–8' †	
	2" B.O	4" B.O	2" B.O	4" B.O	2" B.O	4" B.O	2" B.O	4" B.O	2" B.O	4" B.O
≤ 30.0	4"	3 1/2"	4"	3 1/2"	4"	3 1/2"	4"	3 1/2"	4"	3 1/2"
>30–40	4"	4"	4"	4"	4"	4"	4"	4"	4"	4"
>40–60	4"	4"	4"	4"	4"	4"	4"	4"	4"	–
>60–80	4"	4"	4"	4"	4"	4"	3 1/2"	–	–	–

BUILD-OUT MOUNT W/ (15)

A.S.D. DESIGN LOAD RANGE (p.s.f.)	SLAT SPAN RANGE													
	0'–4' †		> 4'–5' †		> 5'–6' †		> 6'–7' †		> 7'–9' †		> 9'–12' †		> 12'–16' †	
	2" B.O	4" B.O	2" B.O	4" B.O	2" B.O	4" B.O	2" B.O	4" B.O	2" B.O	4" B.O	2" B.O	4" B.O	2" B.O	4" B.O
≤ 30.0	4 1/2"	4"	4 1/2"	4"	4 1/2"	4"	4 1/2"	4"	4 1/2"	4"	4 1/2"	4"	–	–
>30–40	4 1/2"	4 1/2"	4 1/2"	4 1/2"	4 1/2"	4 1/2"	4 1/2"	4 1/2"	4 1/2"	4 1/2"	4 1/2"	–	–	–
>40–60	4 1/2"	4 1/2"	4 1/2"	4 1/2"	4 1/2"	4 1/2"	4 1/2"	4 1/2"	4 1/2"	–	–	–	–	–
>60–80	4"	4"	4"	4"	4"	4"	4"	–	–	–	–	–	–	–

TEXAS DEPARTMENT OF INSURANCE – 2006

STATE OF TEXAS
8/10/15
P.E. SEAL/SIGNATURE/DATE

WALTER A. TILLIT Jr. P.E.
PROFESSIONAL ENGINEER
6355 N.W. 36TH. ST., STE. 305
VIRGINIA GARDENS, FL. 33166
PHONE : (305) 871–1530 , FAX : (305) 871–1531
TEXAS LIC. # 90691
FIRM REGISTRATION # F–13790

40mm ER SLAT BERTHA ROLL-UP HURRICANE SHUTTER

AMERICAN SHUTTER SYSTEMS ASSOC., INC.
4268 WESTROADS DRIVE
WEST PALM BEACH, FL. 33407
PHONE: (877)999–2772 FAX: (561)209–8380

REV. No	DESCRIPTION	DATE	REV. No	DESCRIPTION	DATE
1	OLD 14–087	03/06/15	3		
2			4		

DRAWN BY: F.R.L.
03/06/15 DATE
15–013 DRAWING No

END RETENTION SYSTEM W/ SLAT (1)

MAX. ANCHOR'S SPACING SCHEDULE IIb

FOR A GIVEN PRODUCT MOUNTING TYPE, W/ 3/8"Ø HILTI KWIK HUS BOLT ANCHORS TO GROUTED CONCRETE BLOCK WALL , A.S.D. DESIGN LOAD & SLAT SPAN RANGE †

WALL MOUNT

A.S.D. DESIGN LOAD RANGE (p.s.f.)	SLAT SPAN RANGE						
	0'–4' †	> 4'–5' †	> 5'–6' †	> 6'–7' †	> 7'–9' †	> 9'–12' †	> 12'–16'
≤ 30.0	6 1/2"	6 1/2"	6 1/2"	6 1/2"	6 1/2"	6 1/2"	6 1/2"
>30–40	6"	6"	6"	6"	6"	6"	6"
>40–60	6"	6"	6"	6"	6"	6"	–
>60–80	6"	6"	6"	6"	6"	–	–
>80–105	6 1/2"	6 1/2"	6 1/2"	6 1/2"	–	–	–
>105–120	6"	6"	6"	6"	–	–	–

TRAPPED MOUNT

A.S.D. DESIGN LOAD RANGE (p.s.f.)	SLAT SPAN RANGE						
	0'–4' †	> 4'–5' †	> 5'–6' †	> 6'–7' †	> 7'–9' †	> 9'–12' †	> 12'–16'†
≤ 30.0	6 1/2"	6 1/2"	6 1/2"	6 1/2"	6 1/2"	6 1/2"	6 1/2"
>30–40	6"	6"	6"	6"	6"	6"	6"
>40–60	6"	6"	6"	6"	6"	6"	–
>60–80	6"	6"	6"	6"	6"	–	–
>80–105	6"	6"	6"	–	–	–	–
>105–120	6 1/2"	6 1/2"	6 1/2"	–	–	–	–

SLAT SPAN DEFINITION

† NOTE:
MAX. SLAT SPAN FOR A GIVEN A.S.D. DESIGN LOAD SHALL NEVER EXCEED MAX. SLAT SPAN INDICATED ON SLAT PERFORMANCE CHART ON SHEET 18.

BUILD-OUT MOUNT W/ (12A)

A.S.D. DESIGN LOAD RANGE (p.s.f.)	SLAT SPAN RANGE									
	0'–4' †		> 4'–5' †		> 5'–6' †		> 6'–7' †		> 7'–8' †	
	2" B.O	4" B.O	2" B.O	4" B.O	2" B.O	4" B.O	2" B.O	4" B.O	2" B.O	4" B.O
≤ 30.0	6"	6"	6"	6"	6"	6"	6"	6"	6"	6"
>30–40	6"	6"	6"	6"	6"	6"	6"	6"	6"	6"
>40–60	6"	6"	6"	6"	6"	6"	6"	–	–	–
>60–80	6"	6"	6"	6"	6"	6"	–	–	–	–

BUILD-OUT MOUNT W/ (15)

A.S.D. DESIGN LOAD RANGE (p.s.f.)	SLAT SPAN RANGE													
	0'–4' †		> 4'–5' †		> 5'–6' †		> 6'–7' †		> 7'–9' †		> 9'–12' †		> 12'–16' †	
	2" B.O	4" B.O	2" B.O	4" B.O	2" B.O	4" B.O	2" B.O	4" B.O	2" B.O	4" B.O	2" B.O	4" B.O	2" B.O	4" B.O
≤ 30.0	6"	6"	6"	6"	6"	6"	6"	6"	6"	6"	6"	6"	–	–
>30–40	6"	6"	6"	6"	6"	6"	6"	6"	6"	6"	6"	–	–	–
>40–60	6"	6"	6"	6"	6"	6"	6"	6"	6"	–	–	–	–	–
>60–80	6"	6"	6"	6"	6"	6"	6"	–	–	–	–	–	–	–

MAX. ANCHOR'S SPACING SCHEDULE IIb

FOR A GIVEN PRODUCT MOUNTING TYPE, W/ 5/16"Ø TAPCON XL, ULTRACON OR TAPPER+XTREME ANCHORS TO GROUTED CONCRETE BLOCK WALL , A.S.D. DESIGN LOAD & SLAT SPAN RANGE †

WALL MOUNT

A.S.D. DESIGN LOAD RANGE (p.s.f.)	SLAT SPAN RANGE						
	0'–4' †	> 4'–5' †	> 5'–6' †	> 6'–7' †	> 7'–9' †	> 9'–12' †	> 12'–16'†
≤ 30.0	5 1/2"	5 1/2"	5 1/2"	5 1/2"	5 1/2"	5 1/2"	–
>30–40	5"	5"	5"	5"	5"	–	–
>40–60	5"	5"	5"	5"	–	–	–
>60–80	5"	5"	5"	–	–	–	–
>80–105	6"	6"	–	–	–	–	–
>105–120	6"	6"	–	–	–	–	–

TRAPPED MOUNT

A.S.D. DESIGN LOAD RANGE (p.s.f.)	SLAT SPAN RANGE						
	0'–4' †	> 4'–5' †	> 5'–6' †	> 6'–7' †	> 7'–9' †	> 9'–12' †	> 12'–16'†
≤ 30.0	5"	5"	5"	5"	5"	–	–
>30–40	5"	5"	5"	5"	–	–	–
>40–60	5"	5"	5"	–	–	–	–
>60–80	5"	5"	–	–	–	–	–
>80–105	5"	5"	–	–	–	–	–
>105–120	5 1/2"	–	–	–	–	–	–

BUILD-OUT MOUNT W/ (12A)

A.S.D. DESIGN LOAD RANGE (p.s.f.)	SLAT SPAN RANGE									
	0'–4' †		> 4'–5' †		> 5'–6' †		> 6'–7' †		> 7'–8' †	
	2" B.O	4" B.O	2" B.O	4" B.O	2" B.O	4" B.O	2" B.O	4" B.O	2" B.O	4" B.O
≤ 30.0	5"	5"	5"	5"	5"	5"	5"	5"	5"	–
>30–40	5"	5"	5"	5"	5"	5"	5"	–	–	–
>40–60	5"	5"	5"	5"	5"	–	–	–	–	–
>60–80	5"	5"	5"	5"	–	–	–	–	–	–

BUILD-OUT MOUNT W/ (15)

A.S.D. DESIGN LOAD RANGE (p.s.f.)	SLAT SPAN RANGE													
	0'–4' †		> 4'–5' †		> 5'–6' †		> 6'–7' †		> 7'–9' †		> 9'–12' †		> 12'–16' †	
	2" B.O	4" B.O	2" B.O	4" B.O	2" B.O	4" B.O	2" B.O	4" B.O	2" B.O	4" B.O	2" B.O	4" B.O	2" B.O	4" B.O
≤ 30.0	5"	5"	5"	5"	5"	5"	5"	5"	5"	–	–	–	–	–
>30–40	5"	5"	5"	5"	5"	5"	5"	–	–	–	–	–	–	–
>40–60	5"	5"	5"	5"	5"	–	–	–	–	–	–	–	–	–
>60–80	5"	5"	5"	5"	–	–	–	–	–	–	–	–	–	–

TEXAS DEPARTMENT OF INSURANCE – 2006

3/10/15

P.E. SEAL/SIGNATURE/DATE

WALTER A. TILLIT Jr. P.E.
PROFESSIONAL ENGINEER
6355 N.W. 36TH. ST., STE. 305
VIRGINIA GARDENS, FL. 33166
PHONE : (305) 871–1530 , FAX : (305) 871–1531
TEXAS LIC. # 90691
FIRM REGISTRATION # F–13790

40mm ER SLAT BERTHA ROLL–UP HURRICANE SHUTTER

AMERICAN SHUTTER SYSTEMS ASSOC., INC.
4268 WESTROADS DRIVE
WEST PALM BEACH, FL. 33407
PHONE: (877)999–2772 FAX: (561)209–8380

REV. No	DESCRIPTION	DATE	REV. No	DESCRIPTION	DATE
1	OLD 14–087	03/06/15	3		
2			4		

DRAWN BY: F.R.L.

03/06/15 DATE

15–013 DRAWING No

END RETENTION SYSTEM W SLAT (3)

MAX. ANCHOR'S SPACING SCHEDULE IIa

FOR A GIVEN PRODUCT MOUNTING TYPE, W/ 3/8"Ø WEDGE BOLT ANCHORS TO POURED CONCRETE WALL, A.S.D. DESIGN LOAD & SLAT SPAN RANGE †

WALL MOUNT

A.S.D. DESIGN LOAD RANGE (p.s.f.)	SLAT SPAN RANGE				
	0'–4' †	> 4'–5' †	> 5'–6' †	> 6'–7' †	> 7'–8' †
≤ 30.0	10"	10"	10"	10"	10"
>30–40	10"	10"	10"	10"	10"
>40–60	10"	10"	10"	10"	10"
>60–80	10"	10"	10"	10"	–

BUILD-OUT MOUNT W/ (12A)

A.S.D. DESIGN LOAD RANGE (p.s.f.)	SLAT SPAN RANGE									
	0'–4' †		> 4'–5' †		> 5'–6' †		> 6'–7' †		> 7'–8' †	
	2" B.O	4" B.O	2" B.O	4" B.O	2" B.O	4" B.O	2" B.O	4" B.O	2" B.O	4" B.O
≤ 30.0	9"	9"	9"	9"	9"	9"	9"	9"	9"	9"
>30–40	9"	9"	9"	9"	9"	9"	9"	9"	9"	9"
>40–60	8 1/2"	6 1/2"	8 1/2"	6 1/2"	8 1/2"	6 1/2"	8 1/2"	6 1/2"	8 1/2"	6 1/2"
>60–80	8 1/2"	6"	8 1/2"	6"	8 1/2"	6"	8 1/2"	6"	–	–

TRAPPED MOUNT

A.S.D. DESIGN LOAD RANGE (p.s.f.)	SLAT SPAN RANGE				
	0'–4' †	> 4'–5' †	> 5'–6' †	> 6'–7' †	> 7'–8' †
≤ 30.0	9"	9"	9"	9"	9"
>30–40	9"	9"	9"	9"	9"
>40–60	9"	9"	9"	9"	9"
>60–80	9"	9"	9"	9"	–

SLAT SPAN DEFINITION

† NOTE:
MAX. SLAT SPAN FOR A GIVEN A.S.D. DESIGN LOAD SHALL NEVER EXCEED MAX. SLAT SPAN INDICATED ON SLAT PERFORMANCE CHART ON SHEET 19.

MAX. ANCHOR'S SPACING SCHEDULE IIa

FOR A GIVEN PRODUCT MOUNTING TYPE, W/ 5/16"ø TAPCON XL ANCHORS TO POURED CONCRETE WALL, A.S.D. DESIGN LOAD & SLAT SPAN RANGE †

WALL MOUNT

A.S.D. DESIGN LOAD RANGE (p.s.f.)	SLAT SPAN RANGE				
	0'–4' †	> 4'–5' †	> 5'–6' †	> 6'–7' †	> 7'–8' †
≤ 30.0	8"	8"	8"	8"	8"
>30–40	8"	8"	8"	8"	8"
>40–60	8"	8"	8"	8"	8"
>60–80	8"	8"	8"	8"	–

BUILD-OUT MOUNT W/ (12A)

A.S.D. DESIGN LOAD RANGE (p.s.f.)	SLAT SPAN RANGE									
	0'–4' †		> 4'–5' †		> 5'–6' †		> 6'–7' †		> 7'–8' †	
	2" B.O	4" B.O	2" B.O	4" B.O	2" B.O	4" B.O	2" B.O	4" B.O	2" B.O	4" B.O
≤ 30.0	6"	5 1/2"	6"	5 1/2"	6"	5 1/2"	6"	5 1/2"	6"	5 1/2"
>30–40	6"	4"	6"	4"	6"	4"	6"	4"	6"	4"
>40–60	4"	3 3/4"	4"	3 3/4"	4"	3 3/4"	4"	3 3/4"	4"	–
>60–80	4"	3 3/4"	4"	3 3/4"	4"	3 3/4"	4"	–	–	–

TRAPPED MOUNT

A.S.D. DESIGN LOAD RANGE (p.s.f.)	SLAT SPAN RANGE				
	0'–4' †	> 4'–5' †	> 5'–6' †	> 6'–7' †	> 7'–8' †
≤ 30.0	6"	6"	6"	6"	6"
>30–40	6"	6"	6"	6"	6"
>40–60	6"	6"	6"	6"	6"
>60–80	6"	6"	6"	6"	–

TEXAS DEPARTMENT OF INSURANCE – 2006

3/10/15

P.E. SEAL/SIGNATURE/DATE

WALTER A. TILLIT Jr. P.E.
PROFESSIONAL ENGINEER
6355 N.W. 36TH. ST., STE. 305
VIRGINIA GARDENS, FL. 33166
PHONE : (305) 871–1530 , FAX : (305) 871–1531
TEXAS LIC. # 90691
FIRM REGISTRATION # F–13790

40mm ER SLAT BERTHA ROLL–UP HURRICANE SHUTTER

AMERICAN SHUTTER SYSTEMS ASSOC., INC.
4268 WESTROADS DRIVE
WEST PALM BEACH, FL. 33407
PHONE: (877)999–2772 FAX: (561)209–8380

REV. No	DESCRIPTION	DATE	REV. No	DESCRIPTION	DATE
1	OLD 14–087	03/06/15	3		
2			4		

DRAWN BY: F.R.L.
03/06/15 DATE
15–013 DRAWING No
SHEET 22 OF 29

END RETENTION SYSTEM W/ SLAT (3)

MAX. ANCHOR'S SPACING SCHEDULE IIb

FOR A GIVEN PRODUCT MOUNTING TYPE, W/ 3/8"Ø HILTI KWIK HUS BOLT ANCHORS TO GROUTED CONCRETE BLOCK WALL, A.S.D. DESIGN LOAD & SLAT SPAN RANGE

WALL MOUNT

A.S.D. DESIGN LOAD RANGE (p.s.f.)	SLAT SPAN RANGE				
	0'–4' †	> 4'–5' †	> 5'–6' †	> 6'–7' †	> 7'–8' †
≤ 30.0	10"	10"	10"	10"	10"
>30–40	10"	10"	10"	10"	10"
>40–60	7 1/2"	7 1/2"	7 1/2"	7 1/2"	7 1/2"
>60–80	7 1/2"	7 1/2"	7 1/2"	7 1/2"	–

BUILD-OUT MOUNT W/ (12A)

A.S.D. DESIGN LOAD RANGE (p.s.f.)	SLAT SPAN RANGE									
	0'–4' †		> 4'–5' †		> 5'–6' †		> 6'–7' †		> 7'–8' †	
	2" B.O	4" B.O	2" B.O	4" B.O	2" B.O	4" B.O	2" B.O	4" B.O	2" B.O	4" B.O
≤ 30.0	8 1/2"	6"	8 1/2"	6"	8 1/2"	6"	8 1/2"	6"	8 1/2"	6"
>30–40	6 1/2"	6"	6 1/2"	6"	6 1/2"	6"	6 1/2"	6"	6 1/2"	6"
>40–60	6"	6"	6"	6"	6"	6"	6"	–	–	–
>60–80	6"	6"	6"	6"	6"	–	–	–	–	–

TRAPPED MOUNT

A.S.D. DESIGN LOAD RANGE (p.s.f.)	SLAT SPAN RANGE				
	0'–4' †	> 4'–5' †	> 5'–6' †	> 6'–7' †	> 7'–8' †
≤ 30.0	9"	9"	9"	9"	9"
>30–40	9"	9"	9"	9"	9"
>40–60	7"	7"	7"	7"	7"
>60–80	6 1/2"	6 1/2"	6 1/2"	6 1/2"	–

SLAT SPAN DEFINITION

† NOTE:
MAX. SLAT SPAN FOR A GIVEN A.S.D. DESIGN LOAD SHALL NEVER EXCEED MAX. SLAT SPAN INDICATED ON SLAT PERFORMANCE CHART ON SHEET 19.

MAX. ANCHOR'S SPACING SCHEDULE IIb

FOR A GIVEN PRODUCT MOUNTING TYPE, W/ 5/16"Ø TAPCON XL ANCHORS TO GROUTED CONCRETE BLOCK WALL, A.S.D. DESIGN LOAD & SLAT SPAN RANGE †

WALL MOUNT

A.S.D. DESIGN LOAD RANGE (p.s.f.)	SLAT SPAN RANGE				
	0'–4' †	> 4'–5' †	> 5'–6' †	> 6'–7' †	> 7'–8' †
≤ 30.0	8"	8"	8"	8"	8"
>30–40	8"	8"	8"	8"	8"
>40–60	7"	7"	7"	7"	7"
>60–80	7"	7"	7"	7"	–

BUILD-OUT MOUNT W/ (12A)

A.S.D. DESIGN LOAD RANGE (p.s.f.)	SLAT SPAN RANGE									
	0'–4' †		> 4'–5' †		> 5'–6' †		> 6'–7' †		> 7'–8' †	
	2" B.O	4" B.O	2" B.O	4" B.O	2" B.O	4" B.O	2" B.O	4" B.O	2" B.O	4" B.O
≤ 30.0	3 3/4"	3 3/4"	3 3/4"	3 3/4"	3 3/4"	3 3/4"	3 3/4"	–	3 3/4"	–
>30–40	3 3/4"	3 3/4"	3 3/4"	3 3/4"	3 3/4"	3 3/4"	3 3/4"	–	–	–
>40–60	3 3/4"	3 3/4"	3 3/4"	3 3/4"	3 3/4"	–	–	–	–	–
>60–80	3 3/4"	3 3/4"	3 3/4"	–	–	–	–	–	–	–

TRAPPED MOUNT

A.S.D. DESIGN LOAD RANGE (p.s.f.)	SLAT SPAN RANGE				
	0'–4' †	> 4'–5' †	> 5'–6' †	> 6'–7' †	> 7'–8' †
≤ 30.0	6"	6"	6"	6"	6"
>30–40	6"	6"	6"	6"	6"
>40–60	5 1/2"	5 1/2"	5 1/2"	5 1/2"	5 1/2"
>60–80	5 1/2"	5 1/2"	5 1/2"	5 1/2"	–

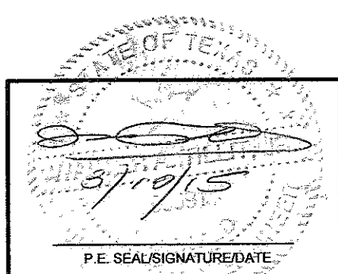

P.E. SEAL/SIGNATURE/DATE

WALTER A. TILLIT Jr. P.E.
PROFESSIONAL ENGINEER
6355 N.W. 36TH. ST., STE. 305
VIRGINIA GARDENS, FL. 33166
PHONE : (305) 871-1530 , FAX : (305) 871-1531
TEXAS LIC. # 90691
FIRM REGISTRATION # F-13790

TEXAS DEPARTMENT OF INSURANCE – 2006

40mm ER SLAT BERTHA ROLL-UP HURRICANE SHUTTER

AMERICAN SHUTTER SYSTEMS ASSOC., INC.
4268 WESTROADS DRIVE
WEST PALM BEACH, FL. 33407
PHONE: (877)999-2772 FAX: (561)209-8380

REV. No	DESCRIPTION	DATE	REV. No	DESCRIPTION	DATE
1	OLD 14-087	03/06/15	3		
2			4		

DRAWN BY: F.R.L.
03/06/15 DATE
15-013 DRAWING No

MULLION SCHEDULE FOR END RETENTION SYSTEM W/ SLAT①

SCHEDULE 1a
FLOOR TO CEILING (TRAPPED) MOUNTING

MAX. SPAN (ft) FOR END AND INTERIOR MULLIONS FOR A GIVEN A.S.D. DESIGN LOAD (psf), AND A MAX. MULLION SPACING (ft) *

A.S.D. DESIGN LOAD (p.s.f.)	MAXIMUM MULLION SPACING (ft)*	MAXIMUM MULLION SPAN (ft)							
		㉔ 4"x6"x1/4" MULLION				㉕ 4"x8"x1/4" MULLION			
		ORIENTATION #1 (▭)		ORIENTATION #2 (▯)		ORIENTATION #1 (▭)		ORIENTATION #2 (▯)	
		END	INTERIOR	END	INTERIOR	END	INTERIOR	END	INTERIOR
30	16'-0"	6' - 6"	9' - 4"	5' - 11"	11' - 6"	7' - 8"	9' - 7"	6' - 9"	12' - 0"
35	16'-0"	6' - 0"	8' - 10"	5' - 6"	10' - 11"	7' - 2"	8' - 11"	6' - 4"	12' - 0"
40	16'-0"	5' - 8"	8' - 5"	5' - 2"	10' - 5"	6' - 5"	8' - 0"	5' - 11"	12' - 0"
45	16'-0"	5' - 8"	8' - 4"	5' - 2"	10' - 4"	6' - 4"	8' - 1"	5' - 11"	12' - 0"
50	15'-5"	5' - 6"	8' - 2"	5' - 1"	9' - 10"	6' - 1"	7' - 10"	5' - 10"	12' - 0"
55	14'-10"	5' - 6"	8' - 1"	5' - 0"	9' - 5"	5' - 11"	7' - 9"	5' - 9"	12' - 0"
60	14'-3"	5' - 6"	8' - 0"	5' - 1"	9' - 3"	5' - 11"	7' - 10"	5' - 9"	12' - 0"
65	13'-9"	5' - 6"	7' - 11"	5' - 0"	9' - 0"	5' - 11"	7' - 7"	5' - 8"	12' - 0"
70	13'-2"	5' - 5"	7' - 11"	5' - 0"	8' - 7"	5' - 10"	7' - 5"	5' - 7"	12' - 0"
75	12'-6"	5' - 6"	7' - 10"	5' - 1"	8' - 7"	5' - 11"	7' - 5"	5' - 8"	12' - 0"
80	12'-0"	5' - 5"	7' - 10"	5' - 0"	8' - 6"	5' - 9"	7' - 2"	5' - 7"	12' - 0"
85	11'-4"	5' - 6"	7' - 10"	5' - 1"	8' - 7"	6' - 0"	7' - 4"	5' - 9"	12' - 0"
90	10'-9"	5' - 8"	7' - 10"	5' - 3"	8' - 9"	6' - 2"	7' - 7"	6' - 0"	12' - 0"
95	10'-0"	5' - 10"	7' - 11"	5' - 5"	9' - 0"	6' - 7"	8' - 0"	6' - 2"	12' - 0"
100	9'-5"	6' - 0"	8' - 1"	5' - 7"	9' - 4"	7' - 0"	8' - 6"	6' - 5"	12' - 0"
105	8'-9"	6' - 4"	8' - 2"	5' - 11"	9' - 10"	7' - 6"	8' - 6"	6' - 9"	12' - 0"
110	8'-1"	6' - 2"	8' - 1"	5' - 10"	9' - 6"	7' - 5"	8' - 6"	6' - 8"	12' - 0"
115	7'-5"	6' - 0"	8' - 0"	5' - 9"	9' - 2"	7' - 2"	8' - 3"	6' - 7"	12' - 0"
120	6'-10"	6' - 0"	7' - 11"	5' - 8"	8' - 10"	6' - 11"	7' - 10"	6' - 6"	12' - 0"

SCHEDULE 2a
WALL MOUNTING

MAX. SPAN (ft) FOR END AND INTERIOR MULLIONS FOR A GIVEN A.S.D. DESIGN LOAD (psf), AND A MAX. MULLION SPACING (ft) *

A.S.D. DESIGN LOAD (p.s.f.)	MAXIMUM MULLION SPACING (ft)*	MAXIMUM MULLION SPAN (ft)							
		㉔ 4"x6"x1/4" MULLION				㉕ 4"x8"x1/4" MULLION			
		ORIENTATION #1 (▭)		ORIENTATION #2 (▯)		ORIENTATION #1 (▭)		ORIENTATION #2 (▯)	
		END	INTERIOR	END	INTERIOR	END	INTERIOR	END	INTERIOR
30	16'-0"	6' - 5"	9' - 3"	5' - 11"	11' - 6"	7' - 8"	9' - 7"	5' - 7"	12' - 0"
35	16'-0"	6' - 0"	8' - 10"	5' - 6"	10' - 11"	7' - 2"	8' - 11"	4' - 10"	12' - 0"
40	16'-0"	5' - 8"	8' - 5"	5' - 2"	10' - 5"	6' - 9"	8' - 5"	4' - 4"	12' - 0"
45	16'-0"	5' - 8"	8' - 4"	5' - 2"	10' - 4"	6' - 9"	8' - 8"	4' - 3"	12' - 0"
50	15'-5"	5' - 6"	8' - 2"	5' - 1"	10' - 2"	6' - 7"	8' - 8"	4' - 2"	12' - 0"
55	14'-10"	5' - 6"	8' - 1"	5' - 0"	10' - 0"	6' - 6"	8' - 8"	4' - 1"	12' - 0"
60	14'-3"	5' - 6"	8' - 0"	5' - 1"	9' - 11"	6' - 6"	8' - 7"	4' - 1"	12' - 0"
65	13'-9"	5' - 6"	7' - 11"	5' - 0"	9' - 10"	6' - 5"	8' - 6"	4' - 1"	12' - 0"
70	13'-2"	5' - 6"	7' - 10"	5' - 0"	9' - 9"	6' - 6"	8' - 5"	4' - 0"	12' - 0"
75	12'-6"	5' - 6"	7' - 10"	5' - 1"	9' - 9"	6' - 6"	8' - 5"	4' - 1"	12' - 0"
80	12'-0"	5' - 6"	7' - 9"	5' - 0"	9' - 8"	6' - 6"	8' - 4"	4' - 1"	12' - 0"
85	11'-4"	5' - 6"	7' - 10"	5' - 1"	9' - 8"	6' - 7"	8' - 4"	4' - 2"	12' - 0"
90	10'-9"	5' - 7"	7' - 10"	5' - 3"	9' - 9"	6' - 9"	8' - 5"	4' - 5"	12' - 0"
95	10'-0"	5' - 10"	7' - 11"	5' - 5"	9' - 10"	6' - 11"	8' - 5"	4' - 8"	12' - 0"
100	9'-5"	6' - 0"	8' - 0"	5' - 7"	10' - 0"	7' - 2"	8' - 6"	5' - 1"	12' - 0"
105	8'-9"	6' - 4"	8' - 2"	5' - 11"	10' - 2"	7' - 6"	8' - 6"	6' - 9"	12' - 0"
110	8'-1"	6' - 3"	8' - 1"	5' - 10"	10' - 0"	7' - 5"	8' - 6"	5' - 6"	12' - 0"
115	7'-5"	6' - 2"	8' - 0"	5' - 9"	9' - 11"	7' - 3"	8' - 5"	5' - 4"	12' - 0"
120	6'-10"	6' - 0"	7' - 11"	5' - 8"	9' - 10"	7' - 2"	8' - 5"	5' - 2"	12' - 0"

* MAXIMUM MULLION SPACING SHALL BE SUCH THAT MAX. ALLOWABLE SLAT SPAN FOR THAT A.S.D. DESIGN LOAD SHALL NOT BE EXCEEDED.

† MULLION ORIENTATION IS AS SEEN FROM THE OUTSIDE (EXTERIOR) OF PRODUCT.

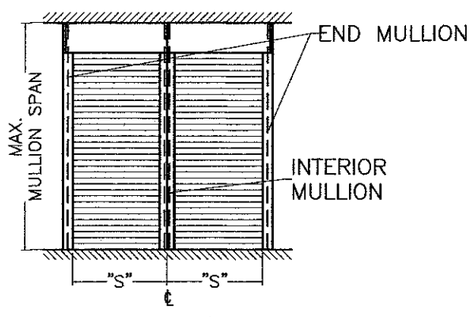

MULLION SPACING: "S"

TEXAS DEPARTMENT OF INSURANCE – 2006

STATE OF TEXAS
3/10/15
P.E. SEAL/SIGNATURE/DATE

WALTER A. TILLIT Jr. P.E.
PROFESSIONAL ENGINEER
6355 N.W. 36TH. ST., STE. 305
VIRGINIA GARDENS, FL. 33166
PHONE : (305) 871-1530 , FAX : (305) 871-1531
TEXAS LIC. # 90691
FIRM REGISTRATION # F-13790

40mm ER SLAT BERTHA ROLL-UP HURRICANE SHUTTER

AMERICAN SHUTTER SYSTEMS ASSOC., INC.
4268 WESTROADS DRIVE
WEST PALM BEACH, FL. 33407
PHONE: (877)999-2772 FAX: (561)209-8380

REV. No	DESCRIPTION	DATE	REV. No	DESCRIPTION	DATE
1	OLD 14-057	03/06/15	3		
2			4		

DRAWN BY: F.R.L.
03/06/15 DATE
15-013 DRAWING No
SHEET 24 OF 29

MULLION SCHEDULE FOR END RETENTION SYSTEM W/ SLAT①

SCHEDULE 1c
FLOOR TO CEILING (TRAPPED) MOUNTING

MAX. SPAN (ft) FOR END AND INTERIOR MULLIONS FOR A GIVEN A.S.D. DESIGN LOAD (psf), AND A 7'-0" MAX. MULLION SPACING (ft) *

DESIGN LOAD (p.s.f.)	MAXIMUM MULLION SPACING (ft)*	MAXIMUM MULLION SPAN (ft)							
		㉔ 4"x6"x1/4" MULLION				㉕ 4"x8"x1/4" MULLION			
		ORIENTATION #1 (▭)		ORIENTATION #2 (▯)		ORIENTATION #1 (▭)		ORIENTATION #2 (▯)	
		END	INTERIOR	END	INTERIOR	END	INTERIOR	END	INTERIOR
30.0	7'-0"	12' - 0"	12' - 0"	12' - 0"	12' - 0"	12' - 0"	12' - 0"	12' - 0"	12' - 0"
35.0	7'-0"	12' - 0"	12' - 0"	12' - 0"	12' - 0"	12' - 0"	12' - 0"	12' - 0"	12' - 0"
40.0	7'-0"	12' - 0"	12' - 0"	12' - 0"	12' - 0"	12' - 0"	12' - 0"	12' - 0"	12' - 0"
45.0	7'-0"	12' - 0"	12' - 0"	12' - 0"	12' - 0"	12' - 0"	12' - 0"	12' - 0"	12' - 0"
50.0	7'-0"	12' - 0"	11' - 7"	11' - 8"	12' - 0"	12' - 0"	12' - 0"	12' - 0"	12' - 0"
55.0	7'-0"	12' - 0"	11' - 3"	10' - 11"	12' - 0"	12' - 0"	12' - 0"	11' - 11"	12' - 0"
60.0	7'-0"	12' - 0"	10' - 11"	10' - 4"	12' - 0"	12' - 0"	11' - 11"	11' - 3"	12' - 0"
65.0	7'-0"	11' - 4"	10' - 8"	9' - 11"	12' - 0"	12' - 0"	11' - 7"	10' - 9"	12' - 0"
70.0	7'-0"	10' - 9"	10' - 5"	9' - 6"	12' - 0"	12' - 0"	11' - 3"	10' - 4"	12' - 0"
75.0	7'-0"	10' - 3"	10' - 2"	9' - 2"	12' - 0"	12' - 0"	11' - 0"	9' - 11"	12' - 0"
80.0	7'-0"	9' - 10"	9' - 11"	8' - 10"	12' - 0"	11' - 6"	10' - 10"	9' - 8"	12' - 0"
85.0	7'-0"	9' - 5"	9' - 9"	8' - 7"	12' - 0"	11' - 1"	10' - 7"	9' - 4"	12' - 0"
90.0	7'-0"	9' - 1"	9' - 7"	8' - 5"	11' - 10"	10' - 8"	10' - 5"	9' - 1"	12' - 0"
95.0	7'-0"	8' - 9"	9' - 5"	8' - 2"	11' - 7"	10' - 4"	10' - 2"	8' - 11"	12' - 0"
100.0	7'-0"	8' - 6"	9' - 3"	8' - 0"	11' - 5"	10' - 0"	10' - 0"	8' - 8"	12' - 0"
105.0	7'-0"	8' - 3"	9' - 1"	7' - 9"	11' - 3"	9' - 9"	9' - 10"	8' - 6"	12' - 0"
110.0	7'-0"	8' - 0"	8' - 11"	7' - 7"	11' - 1"	9' - 6"	9' - 9"	8' - 4"	12' - 0"
115.0	7'-0"	7' - 10"	8' - 10"	7' - 4"	10' - 11"	9' - 3"	9' - 7"	8' - 2"	12' - 0"
120.0	6'-10"	7' - 8"	8' - 8"	7' - 2"	10' - 9"	9' - 0"	9' - 5"	8' - 1"	12' - 0"

SCHEDULE 2c
WALL MOUNTING

MAX. SPAN (ft) FOR END AND INTERIOR MULLIONS FOR A GIVEN A.S.D. DESIGN LOAD (psf), AND A 7'-0" MAX. MULLION SPACING (ft) *

A.S.D. DESIGN LOAD (p.s.f.)	MAXIMUM MULLION SPACING (ft)*	MAXIMUM MULLION SPAN (ft)							
		㉔ 4"x6"x1/4" MULLION				㉕ 4"x8"x1/4" MULLION			
		ORIENTATION #1 (▭)		ORIENTATION #2 (▯)		ORIENTATION #1 (▭)		ORIENTATION #2 (▯)	
		END	INTERIOR	END	INTERIOR	END	INTERIOR	END	INTERIOR
30.0	7'-0"	12' - 0"	12' - 0"	12' - 0"	12' - 0"	12' - 0"	12' - 0"	12' - 0"	12' - 0"
35.0	7'-0"	12' - 0"	12' - 0"	12' - 0"	12' - 0"	12' - 0"	12' - 0"	12' - 0"	12' - 0"
40.0	7'-0"	12' - 0"	12' - 0"	12' - 0"	12' - 0"	12' - 0"	12' - 0"	12' - 0"	12' - 0"
45.0	7'-0"	12' - 0"	12' - 0"	12' - 0"	12' - 0"	12' - 0"	12' - 0"	12' - 0"	12' - 0"
50.0	7'-0"	12' - 0"	11' - 7"	11' - 8"	12' - 0"	12' - 0"	12' - 0"	12' - 0"	12' - 0"
55.0	7'-0"	12' - 0"	11' - 3"	10' - 11"	12' - 0"	12' - 0"	12' - 0"	11' - 11"	12' - 0"
60.0	7'-0"	12' - 0"	10' - 11"	10' - 4"	12' - 0"	12' - 0"	11' - 11"	11' - 3"	12' - 0"
65.0	7'-0"	11' - 4"	10' - 8"	9' - 11"	12' - 0"	12' - 0"	11' - 7"	10' - 9"	12' - 0"
70.0	7'-0"	10' - 9"	10' - 5"	9' - 6"	12' - 0"	12' - 0"	11' - 3"	10' - 4"	12' - 0"
75.0	7'-0"	10' - 3"	10' - 2"	9' - 2"	12' - 0"	12' - 0"	11' - 0"	9' - 11"	12' - 0"
80.0	7'-0"	9' - 10"	9' - 11"	8' - 10"	12' - 0"	11' - 6"	10' - 10"	9' - 8"	12' - 0"
85.0	7'-0"	9' - 5"	9' - 9"	8' - 7"	12' - 0"	11' - 1"	10' - 7"	9' - 4"	12' - 0"
90.0	7'-0"	9' - 1"	9' - 7"	8' - 5"	11' - 10"	10' - 8"	10' - 5"	9' - 1"	12' - 0"
95.0	7'-0"	8' - 9"	9' - 5"	8' - 2"	11' - 7"	10' - 4"	10' - 2"	8' - 11"	12' - 0"
100.0	7'-0"	8' - 6"	9' - 3"	8' - 0"	11' - 5"	10' - 0"	10' - 0"	8' - 8"	12' - 0"
105.0	7'-0"	8' - 3"	9' - 1"	7' - 9"	11' - 3"	9' - 9"	9' - 10"	8' - 6"	12' - 0"
110.0	7'-0"	8' - 0"	8' - 11"	7' - 7"	11' - 1"	9' - 6"	9' - 9"	8' - 4"	12' - 0"
115.0	7'-0"	7' - 10"	8' - 10"	7' - 4"	10' - 11"	9' - 3"	9' - 7"	8' - 2"	12' - 0"
120.0	6'-10"	7' - 8"	8' - 8"	7' - 2"	10' - 9"	9' - 0"	9' - 5"	8' - 1"	12' - 0"

* MAXIMUM MULLION SPACING SHALL BE SUCH THAT MAX. ALLOWABLE SLAT SPAN FOR THAT A.S.D. DESIGN LOAD SHALL NOT BE EXCEEDED.

† MULLION ORIENTATION IS AS SEEN FROM THE OUTSIDE (EXTERIOR) OF PRODUCT.

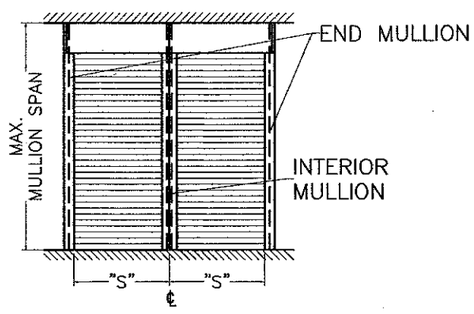

MULLION SPACING: "S"

TEXAS DEPARTMENT OF INSURANCE – 2006

3/10/15

P.E. SEAL/SIGNATURE/DATE

WALTER A. TILLIT Jr. P.E.
PROFESSIONAL ENGINEER
6355 N.W. 36TH. ST., STE. 305
VIRGINIA GARDENS, FL. 33166
PHONE : (305) 871-1530 , FAX : (305) 871-1531
TEXAS LIC. # 90691
FIRM REGISTRATION # F-13790

40mm ER SLAT BERTHA ROLL-UP HURRICANE SHUTTER

AMERICAN SHUTTER SYSTEMS ASSOC., INC.
4268 WESTROADS DRIVE
WEST PALM BEACH, FL. 33407
PHONE: (877)999-2772 FAX: (561)209-8380

REV. No	DESCRIPTION	DATE	REV. No	DESCRIPTION	DATE
1	OLD 14-087	03/06/15	3		
2			4		

DRAWN BY: F.R.L.

03/06/15 DATE

15-013 DRAWING No

MULLION SCHEDULE FOR END RETENTION SYSTEM W/ SLAT①

SCHEDULE 1b
FLOOR TO CEILING (TRAPPED) MOUNTING

MAX. SPAN (ft) FOR END AND INTERIOR MULLIONS FOR A GIVEN DESIGN LOAD (psf), AND A 12'-0" MAX. MULLION SPACING (ft) *

DESIGN LOAD (p.s.f.)	MAXIMUM MULLION SPACING (ft)*	MAXIMUM MULLION SPAN (ft)							
		㉔ 4"x6"x1/4" MULLION				㉕ 4"x8"x1/4" MULLION			
		ORIENTATION #1 (▭)		ORIENTATION #2 (▯)		ORIENTATION #1 (▭)		ORIENTATION #2 (▯)	
		END	INTERIOR	END	INTERIOR	END	INTERIOR	END	INTERIOR
30.0	12'-0"	10' - 1"	11' - 6"	8' - 8"	12' - 0"	12' - 0"	12' - 0"	9' - 5"	12' - 0"
35.0	12'-0"	9' - 4"	10' - 11"	8' - 2"	12' - 0"	11' - 1"	11' - 11"	8' - 11"	12' - 0"
40.0	12'-0"	8' - 8"	10' - 5"	7' - 10"	12' - 0"	10' - 4"	11' - 4"	8' - 6"	12' - 0"
45.0	12'-0"	8' - 2"	10' - 1"	7' - 6"	12' - 0"	9' - 9"	10' - 11"	8' - 2"	12' - 0"
50.0	12'-0"	7' - 9"	9' - 8"	7' - 2"	12' - 0"	9' - 2"	10' - 7"	7' - 11"	12' - 0"
55.0	12'-0"	7' - 5"	9' - 5"	6' - 10"	11' - 8"	8' - 9"	10' - 3"	7' - 8"	12' - 0"
60.0	12'-0"	7' - 1"	9' - 2"	6' - 7"	11' - 4"	8' - 5"	9' - 11"	7' - 5"	12' - 0"
65.0	12'-0"	6' - 10"	8' - 11"	6' - 4"	11' - 0"	8' - 1"	9' - 8"	7' - 3"	12' - 0"
70.0	12'-0"	6' - 7"	8' - 8"	6' - 1"	10' - 9"	7' - 10"	9' - 5"	7' - 0"	12' - 0"
75.0	12'-0"	6' - 4"	8' - 6"	5' - 11"	10' - 6"	7' - 6"	9' - 3"	6' - 9"	12' - 0"
80.0	12'-0"	6' - 2"	8' - 4"	5' - 8"	10' - 3"	7' - 4"	9' - 0"	6' - 6"	12' - 0"

SCHEDULE 2b
WALL MOUNTING

MAX. SPAN (ft) FOR END AND INTERIOR MULLIONS FOR A GIVEN DESIGN LOAD (psf), AND A 12'-0" MAX. MULLION SPACING (ft) *

DESIGN LOAD (p.s.f.)	MAXIMUM MULLION SPACING (ft)*	MAXIMUM MULLION SPAN (ft)							
		㉔ 4"x6"x1/4" MULLION				㉕ 4"x8"x1/4" MULLION			
		ORIENTATION #1 (▭)		ORIENTATION #2 (▯)		ORIENTATION #1 (▭)		ORIENTATION #2 (▯)	
		END	INTERIOR	END	INTERIOR	END	INTERIOR	END	INTERIOR
30.0	12'-0"	8' - 8"	11' - 6"	8' - 8"	12' - 0"	12' - 0"	12' - 0"	9' - 5"	12' - 0"
35.0	12'-0"	8' - 2"	10' - 11"	8' - 2"	12' - 0"	11' - 1"	11' - 11"	8' - 11"	12' - 0"
40.0	12'-0"	7' - 10"	10' - 5"	7' - 10"	12' - 0"	10' - 4"	11' - 4"	8' - 6"	12' - 0"
45.0	12'-0"	7' - 6"	10' - 1"	7' - 6"	12' - 0"	9' - 9"	10' - 11"	8' - 2"	12' - 0"
50.0	12'-0"	7' - 2"	9' - 8"	7' - 2"	12' - 0"	9' - 2"	10' - 7"	7' - 11"	12' - 0"
55.0	12'-0"	6' - 10"	9' - 5"	6' - 10"	11' - 8"	8' - 9"	10' - 3"	7' - 8"	12' - 0"
60.0	12'-0"	6' - 7"	9' - 2"	6' - 7"	11' - 4"	8' - 5"	9' - 11"	7' - 5"	12' - 0"
65.0	12'-0"	6' - 4"	8' - 11"	6' - 4"	11' - 0"	8' - 1"	9' - 8"	7' - 3"	12' - 0"
70.0	12'-0"	6' - 1"	8' - 8"	6' - 1"	10' - 9"	7' - 10"	9' - 5"	7' - 0"	12' - 0"
75.0	12'-0"	5' - 11"	8' - 6"	5' - 11"	10' - 6"	7' - 6"	9' - 3"	5' - 7"	12' - 0"
80.0	12'-0"	5' - 8"	8' - 4"	5' - 8"	10' - 3"	7' - 4"	9' - 0"	5' - 3"	12' - 0"

* MAXIMUM MULLION SPACING SHALL BE SUCH THAT MAX. ALLOWABLE SLAT SPAN FOR THAT DESIGN LOAD SHALL NOT BE EXCEEDED.

† MULLION ORIENTATION IS AS SEEN FROM THE OUTSIDE (EXTERIOR) OF PRODUCT.

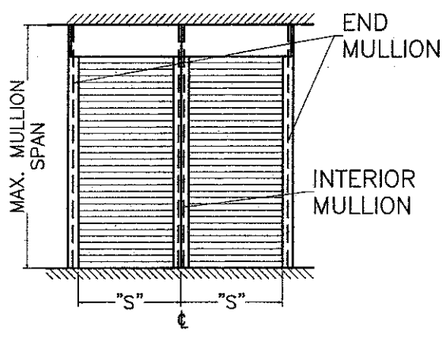

MULLION SPACING: "S"

TEXAS DEPARTMENT OF INSURANCE – 2006

3/19/15

P.E. SEAL/SIGNATURE/DATE

WALTER A. TILLIT Jr. P.E.
PROFESSIONAL ENGINEER
6355 N.W. 36TH. ST., STE. 305
VIRGINIA GARDENS, FL. 33166
PHONE : (305) 871-1530 , FAX : (305) 871-1531
TEXAS LIC. # 90691
FIRM REGISTRATION # F-13790

40mm ER SLAT BERTHA ROLL-UP HURRICANE SHUTTER

AMERICAN SHUTTER SYSTEMS ASSOC., INC.
4268 WESTROADS DRIVE
WEST PALM BEACH, FL. 33407
PHONE: (877)999-2772 FAX: (561)209-8380

REV. No	DESCRIPTION	DATE	REV. No	DESCRIPTION	DATE
1	OLD 14-087	03/06/15	3		
2			4		

DRAWN BY: F.R.L.

03/06/15 DATE

15-013 DRAWING No

MULLION SCHEDULE FOR END RETENTION SYSTEM W/ SLAT ①

SCHEDULE 1b' (LIMITED LOAD, MULLION SPACING & SPAN INSTALLATION)

FLOOR TO CEILING (TRAPPED) MOUNTING

MAX. SPAN (ft) FOR END AND INTERIOR MULLIONS FOR A GIVEN DESIGN LOAD (psf), AND FOR 12'-0" (CASE I) & 8'-0" (CASES Ia & II) MAX. MULLION SPACING (ft) *

INSTALLATION CASES	A.S.D. DESIGN LOAD (p.s.f.)	MAXIMUM MULLION SPACING (ft)*	MAXIMUM MULLION SPAN (ft)				
			㉔ 4"x6"x1/4" MULLION		㉕ 4"x8"x1/4" MULLION		
			ORIENTATION #1	ORIENTATION #2	ORIENTATION #1	ORIENTATION #1	ORIENTATION #2
			(▭) ▣	(▯) ▣	(▭) ▣	(▭) ▣	(▯) ▣
			END	INTERIOR	END	INTERIOR	INTERIOR
CASE I	30.0	12'-0"	-	12' - 0"	12' - 0"	12' - 0"	12' - 0"
	35.0	12'-0"	-	12' - 0"	11' - 1"	11' - 11"	12' - 0"
	40.0	12'-0"	-	12' - 0"	10' - 4"	11' - 4"	12' - 0"
	45.0	12'-0"	-	12' - 0"	9' - 9"	10' - 11"	12' - 0"
	50.0	12'-0"	-	12' - 0"	8' - 11"	10' - 7"	12' - 0"
	55.0	12'-0"	-	11' - 8"	8' - 2"	10' - 3"	12' - 0"
	60.0	12'-0"	-	11' - 4"	7' - 6"	9' - 11"	12' - 0"
	60.8	12'-0"	-	11' - 3"	7' - 4"	9' - 11"	12' - 0"
CASE Ia	30.0	8'-0"	-	12' - 0"	12' - 0"	12' - 0"	12' - 0"
	35.0	8'-0"	-	12' - 0"	12' - 0"	12' - 0"	12' - 0"
	40.0	8'-0"	-	12' - 0"	12' - 0"	12' - 0"	12' - 0"
	45.0	8'-0"	-	12' - 0"	12' - 0"	12' - 0"	12' - 0"
	50.0	8'-0"	-	12' - 0"	12' - 0"	12' - 0"	12' - 0"
	55.0	8'-0"	-	12' - 0"	12' - 0"	11' - 8"	12' - 0"
	60.0	8'-0"	-	12' - 0"	11' - 10"	11' - 4"	12' - 0"
	60.8	8'-0"	-	12' - 0"	11' - 9"	11' - 4"	12' - 0"
CASE II	30.0	8'-0"	-	9' - 0"	9' - 0"	9' - 0"	9' - 0"
	35.0	8'-0"	-	9' - 0"	9' - 0"	9' - 0"	9' - 0"
	40.0	8'-0"	-	9' - 0"	9' - 0"	9' - 0"	9' - 0"
	45.0	8'-0"	-	9' - 0"	9' - 0"	9' - 0"	9' - 0"
	50.0	8'-0"	-	9' - 0"	9' - 0"	9' - 0"	9' - 0"
	55.0	8'-0"	-	9' - 0"	9' - 0"	9' - 0"	9' - 0"
	60.0	8'-0"	-	9' - 0"	9' - 0"	9' - 0"	9' - 0"
	65.0	8'-0"	-	9' - 0"	9' - 0"	9' - 0"	9' - 0"
	70.0	8'-0"	-	9' - 0"	9' - 0"	9' - 0"	9' - 0"
	75.0	8'-0"	-	9' - 0"	9' - 0"	9' - 0"	9' - 0"
	80.0	8'-0"	-	9' - 0"	9' - 0"	9' - 0"	9' - 0"
	85.0	8'-0"	-	9' - 0"	8' - 6" Δ	8' - 6" Δ	9' - 0"
	90.0	8'-0"	-	9' - 0"	8' - 0" Δ	8' - 0" Δ	9' - 0"
	95.0	8'-0"	-	9' - 0"	7' - 7" Δ	7' - 7" Δ	9' - 0"
	100.0	8'-0"	-	9' - 0"	7' - 2" Δ	7' - 3" Δ	9' - 0"

Δ NOTE: USE 9'-0" SPAN IF ANCHOR CONSISTS OF HILTI, INC KWIK HUS-H SCREW, POWER FASTENERS OR WEDGE-BOLT ANCHOR IN LIEU OF HILTI KWIK BOLT TZ, SEE SCHEDULES 1 & 2 ON SHEET 11.

SCHEDULE 2b' (LIMITED LOAD, MULLION SPACING & SPAN INSTALLATION)

WALL MOUNTED

MAX. SPAN (ft) FOR END AND INTERIOR MULLIONS FOR A GIVEN DESIGN LOAD (psf), AND FOR 12'-0" (CASE I') & 8'-0" (CASE II') MAX. MULLION SPACING (ft) *

INSTALLATION CASES	A.S.D. DESIGN LOAD (p.s.f.)	MAXIMUM MULLION SPACING (ft)*	MAXIMUM MULLION SPAN (ft)				
			㉔ 4"x6"x1/4" MULLION		㉕ 4"x8"x1/4" MULLION		
			ORIENTATION #1	ORIENTATION #2	ORIENTATION #1	ORIENTATION #1	ORIENTATION #2
			(▭) ▣	(▯) ▣	(▭) ▣	(▭) ▣	(▯) ▣
			END	INTERIOR	END	INTERIOR	INTERIOR
CASE I'	30.0	12'-0"	-	12' - 0"	12' - 0"	12' - 0"	12' - 0"
	35.0	12'-0"	-	12' - 0"	11' - 1"	11' - 11"	12' - 0"
	40.0	12'-0"	-	12' - 0"	10' - 4"	11' - 4"	12' - 0"
	45.0	12'-0"	-	12' - 0"	9' - 9"	10' - 11"	12' - 0"
	50.0	12'-0"	-	12' - 0"	9' - 2"	10' - 7"	12' - 0"
	55.0	12'-0"	-	11' - 8"	7' - 3"	10' - 3"	12' - 0"
	60.0	12'-0"	-	11' - 4"	6' - 7"	9' - 11"	12' - 0"
	60.8	12'-0"	-	11' - 3"	6' - 6"	9' - 11"	12' - 0"
CASE II'	30.0	8'-0"	-	9' - 0"	9' - 0"	9' - 0"	9' - 0"
	35.0	8'-0"	-	9' - 0"	9' - 0"	9' - 0"	9' - 0"
	40.0	8'-0"	-	9' - 0"	9' - 0"	9' - 0"	9' - 0"
	45.0	8'-0"	-	9' - 0"	9' - 0"	9' - 0"	9' - 0"
	50.0	8'-0"	-	9' - 0"	9' - 0"	9' - 0"	9' - 0"
	55.0	8'-0"	-	9' - 0"	9' - 0"	9' - 0"	9' - 0"
	60.0	8'-0"	-	9' - 0"	9' - 0"	9' - 0"	9' - 0"
	65.0	8'-0"	-	9' - 0"	9' - 0"	9' - 0"	9' - 0"
	70.0	8'-0"	-	9' - 0"	9' - 0"	9' - 0"	9' - 0"
	75.0	8'-0"	-	9' - 0"	9' - 0"	9' - 0"	9' - 0"
	80.0	8'-0"	-	9' - 0"	9' - 0"	9' - 0"	9' - 0"
	85.0	8'-0"	-	9' - 0"	9' - 0"	9' - 0"	9' - 0"
	90.0	8'-0"	-	9' - 0"	9' - 0"	9' - 0"	9' - 0"
	95.0	8'-0"	-	9' - 0"	9' - 0"	9' - 0"	9' - 0"
	100.0	8'-0"	-	9' - 0"	8' - 10"	9' - 0"	9' - 0"

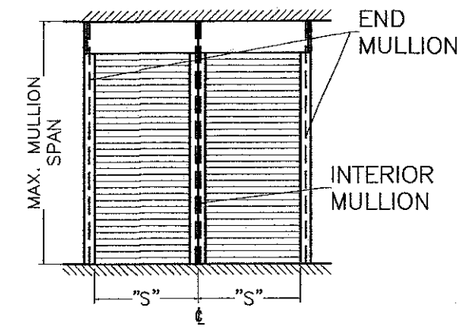

MULLION SPACING: "S"

* MAXIMUM MULLION SPACING SHALL BE SUCH THAT MAX. ALLOWABLE SLAT SPAN FOR THAT DESIGN LOAD SHALL NOT BE EXCEEDED.

† MULLION ORIENTATION IS AS SEEN FROM THE OUTSIDE (EXTERIOR) OF PRODUCT.

TEXAS DEPARTMENT OF INSURANCE – 2006

STATE OF TEXAS
3/19/15
P.E. SEAL/SIGNATURE/DATE

WALTER A. TILLIT Jr. P.E.
PROFESSIONAL ENGINEER
6355 N.W. 36TH. ST., STE. 305
VIRGINIA GARDENS, FL. 33166
PHONE : (305) 871-1530 , FAX : (305) 871-1531
TEXAS LIC. # 90691
FIRM REGISTRATION # F-13790

40mm ER SLAT BERTHA ROLL-UP HURRICANE SHUTTER

AMERICAN SHUTTER SYSTEMS ASSOC., INC.
4268 WESTROADS DRIVE
WEST PALM BEACH, FL. 33407
PHONE: (877)999-2772 FAX: (561)209-8380

REV. No	DESCRIPTION	DATE	REV. No	DESCRIPTION	DATE
1	OLD 14-087	03/06/15	3		
2			4		

DRAWN BY: F.R.L.
03/06/15 DATE
15-013 DRAWING No
SHEET 27 OF 29

MULLION SCHEDULE FOR END RETENTION SYSTEM W/ SLAT ③

SCHEDULE 1a
FLOOR TO CEILING (TRAPPED) MOUNTING

MAX. SPAN (ft) FOR END AND INTERIOR MULLIONS FOR A GIVEN A.S.D. DESIGN LOAD (psf), AND A MAX. MULLION SPACING (ft) *

A.S.D. DESIGN LOAD (p.s.f.)	MAXIMUM MULLION SPACING (ft)*	MAXIMUM MULLION SPAN (ft)							
		㉔ 4"x6"x1/4" MULLION				㉕ 4"x8"x1/4" MULLION			
		ORIENTATION #1 (▭)		ORIENTATION #2 (▯)		ORIENTATION #1 (▭)		ORIENTATION #2 (▯)	
		END	INTERIOR	END	INTERIOR	END	INTERIOR	END	INTERIOR
30	8'-4"	12' - 0"	12' - 0"	10' - 10"	12' - 0"	12' - 0"	12' - 0"	11' - 9"	12' - 0"
35	8'-4"	12' - 0"	12' - 0"	10' - 3"	12' - 0"	12' - 0"	12' - 0"	11' - 2"	12' - 0"
40	8'-4"	11' - 9"	11' - 10"	9' - 9"	12' - 0"	12' - 0"	12' - 0"	10' - 8"	12' - 0"
45	8'-4"	11' - 0"	11' - 4"	9' - 5"	12' - 0"	12' - 0"	12' - 0"	10' - 3"	12' - 0"
50	8'-4"	10' - 6"	11' - 0"	9' - 1"	12' - 0"	12' - 0"	11' - 11"	9' - 10"	12' - 0"
55	8'-4"	10' - 0"	10' - 7"	8' - 9"	12' - 0"	11' - 9"	11' - 7"	9' - 7"	12' - 0"
60	8'-4"	9' - 7"	10' - 4"	8' - 6"	12' - 0"	11' - 3"	11' - 3"	9' - 3"	12' - 0"
65	7'9"	9' - 8"	10' - 3"	8' - 8"	12' - 0"	11' - 5"	11' - 2"	9' - 5"	12' - 0"
70	7'-5"	9' - 7"	10' - 2"	8' - 7"	12' - 0"	11' - 4"	11' - 1"	9' - 4"	12' - 0"
75	7'-0"	9' - 8"	10' - 2"	8' - 8"	12' - 0"	11' - 5"	11' - 0"	9' - 5"	12' - 0"
80	6'-10"	9' - 6"	10' - 0"	8' - 7"	12' - 0"	11' - 3"	10' - 11"	9' - 4"	12' - 0"

SCHEDULE 2a
WALL MOUNTING

MAX. SPAN (ft) FOR END AND INTERIOR MULLIONS FOR A GIVEN A.S.D. DESIGN LOAD (psf), AND A MAX. MULLION SPACING (ft) *

A.S.D. DESIGN LOAD (p.s.f.)	MAXIMUM MULLION SPACING (ft)*	MAXIMUM MULLION SPAN (ft)							
		㉔ 4"x6"x1/4" MULLION				㉕ 4"x8"x1/4" MULLION			
		ORIENTATION #1 (▭)		ORIENTATION #2 (▯)		ORIENTATION #1 (▭)		ORIENTATION #2 (▯)	
		END	INTERIOR	END	INTERIOR	END	INTERIOR	END	INTERIOR
30	8'-4"	12' - 0"	12' - 0"	10' - 10"	12' - 0"	12' - 0"	12' - 0"	11' - 9"	12' - 0"
35	8'-4"	12' - 0"	12' - 0"	10' - 3"	12' - 0"	12' - 0"	12' - 0"	11' - 2"	12' - 0"
40	8'-4"	11' - 9"	11' - 10"	9' - 9"	12' - 0"	12' - 0"	12' - 0"	10' - 8"	12' - 0"
45	8'-4"	11' - 0"	11' - 4"	9' - 5"	12' - 0"	12' - 0"	12' - 0"	10' - 3"	12' - 0"
50	8'-4"	10' - 6"	11' - 0"	9' - 1"	12' - 0"	12' - 0"	11' - 11"	9' - 10"	12' - 0"
55	8'-4"	10' - 0"	10' - 7"	8' - 9"	12' - 0"	11' - 9"	11' - 7"	9' - 7"	12' - 0"
60	8'-4"	9' - 7"	10' - 4"	8' - 6"	12' - 0"	11' - 3"	11' - 3"	9' - 3"	12' - 0"
65	7'-9"	9' - 8"	10' - 3"	8' - 8"	12' - 0"	11' - 5"	11' - 2"	9' - 5"	12' - 0"
70	7'-5"	9' - 7"	10' - 2"	8' - 7"	12' - 0"	11' - 4"	11' - 1"	9' - 4"	12' - 0"
75	7'-0"	9' - 8"	10' - 2"	8' - 8"	12' - 0"	11' - 5"	11' - 0"	9' - 5"	12' - 0"
80	6'-10"	9' - 6"	10' - 0"	8' - 7"	12' - 0"	11' - 3"	10' - 11"	9' - 4"	12' - 0"

SCHEDULE 1c
FLOOR TO CEILING (TRAPPED) MOUNTING

MAX. SPAN (ft) FOR END AND INTERIOR MULLIONS FOR A GIVEN A.S.D. DESIGN LOAD (psf), AND A **6'-10"** MAX. MULLION SPACING (ft) *

DESIGN LOAD (p.s.f.)	MAXIMUM MULLION SPACING (ft)*	MAXIMUM MULLION SPAN (ft)							
		㉔ 4"x6"x1/4" MULLION				㉕ 4"x8"x1/4" MULLION			
		ORIENTATION #1 (▭)		ORIENTATION #2 (▯)		ORIENTATION #1 (▭)		ORIENTATION #2 (▯)	
		END	INTERIOR	END	INTERIOR	END	INTERIOR	END	INTERIOR
30.0	6'-10"	12' - 0"	12' - 0"	12' - 0"	12' - 0"	-12' - 0"	12' - 0"	12' - 0"	12' - 0"
35.0	6'-10"	12' - 0"	12' - 0"	12' - 0"	12' - 0"	-12' - 0"	12' - 0"	12' - 0"	12' - 0"
40.0	6'-10"	12' - 0"	12' - 0"	12' - 0"	12' - 0"	-12' - 0"	12' - 0"	12' - 0"	12' - 0"
45.0	6'-10"	12' - 0"	12' - 0"	12' - 0"	12' - 0"	12' - 0"	12' - 0"	12' - 0"	12' - 0"
50.0	6'-10"	12' - 0"	11' - 7"	11' - 8"	12' - 0"	12' - 0"	12' - 0"	12' - 0"	12' - 0"
55.0	6'-10"	12' - 0"	11' - 3"	10' - 11"	12' - 0"	12' - 0"	12' - 0"	11' - 11"	12' - 0"
60.0	6'-10"	12' - 0"	10' - 11"	10' - 4"	12' - 0"	12' - 0"	11' - 11"	11' - 3"	12' - 0"
65.0	6'-10"	11' - 4"	10' - 8"	9' - 11"	12' - 0"	12' - 0"	11' - 7"	10' - 9"	12' - 0"
70.0	6'-10"	10' - 9"	10' - 5"	9' - 6"	12' - 0"	12' - 0"	11' - 3"	10' - 4"	12' - 0"
75.0	6'-10"	10' - 3"	10' - 2"	9' - 2"	12' - 0"	12' - 0"	11' - 0"	9' - 11"	12' - 0"
80.0	6'-10"	9' - 6"	10' - 0"	8' - 7"	12' - 0"	11' - 3"	10' - 11"	9' - 4"	12' - 0"

SCHEDULE 2c
WALL MOUNTING

MAX. SPAN (ft) FOR END AND INTERIOR MULLIONS FOR A GIVEN A.S.D. DESIGN LOAD (psf), AND A **6'-10"** MAX. MULLION SPACING (ft) *

A.S.D. DESIGN LOAD (p.s.f.)	MAXIMUM MULLION SPACING (ft)*	MAXIMUM MULLION SPAN (ft)							
		㉔ 4"x6"x1/4" MULLION				㉕ 4"x8"x1/4" MULLION			
		ORIENTATION #1 (▭)		ORIENTATION #2 (▯)		ORIENTATION #1 (▭)		ORIENTATION #2 (▯)	
		END	INTERIOR	END	INTERIOR	END	INTERIOR	END	INTERIOR
30.0	6'-10"	12' - 0"	12' - 0"	12' - 0"	12' - 0"	-12' - 0"	12' - 0"	12' - 0"	12' - 0"
35.0	6'-10"	12' - 0"	12' - 0"	12' - 0"	12' - 0"	-12' - 0"	12' - 0"	12' - 0"	12' - 0"
40.0	6'-10"	12' - 0"	12' - 0"	12' - 0"	12' - 0"	-12' - 0"	12' - 0"	12' - 0"	12' - 0"
45.0	6'-10"	12' - 0"	12' - 0"	12' - 0"	12' - 0"	12' - 0"	12' - 0"	12' - 0"	12' - 0"
50.0	6'-10"	12' - 0"	11' - 7"	11' - 8"	12' - 0"	12' - 0"	12' - 0"	12' - 0"	12' - 0"
55.0	6'-10"	12' - 0"	11' - 3"	10' - 11"	12' - 0"	12' - 0"	12' - 0"	11' - 11"	12' - 0"
60.0	6'-10"	12' - 0"	10' - 11"	10' - 4"	12' - 0"	12' - 0"	11' - 11"	11' - 3"	12' - 0"
65.0	6'-10"	11' - 4"	10' - 8"	9' - 11"	12' - 0"	12' - 0"	11' - 7"	10' - 9"	12' - 0"
70.0	6'-10"	10' - 9"	10' - 5"	9' - 6"	12' - 0"	12' - 0"	11' - 3"	10' - 4"	12' - 0"
75.0	6'-10"	10' - 3"	10' - 2"	9' - 2"	12' - 0"	12' - 0"	11' - 0"	9' - 11"	12' - 0"
80.0	6'-10"	9' - 6"	10' - 0"	8' - 7"	12' - 0"	11' - 3"	10' - 11"	9' - 4"	12' - 0"

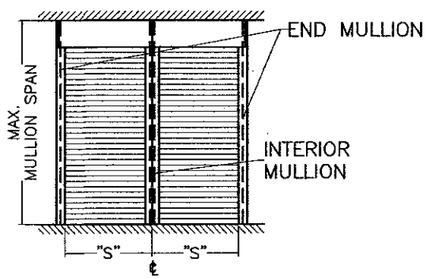

MULLION SPACING: "S"

* MAXIMUM MULLION SPACING SHALL BE SUCH THAT MAX. ALLOWABLE SLAT SPAN FOR THAT A.S.D. DESIGN LOAD SHALL NOT BE EXCEEDED.

† MULLION ORIENTATION IS AS SEEN FROM THE OUTSIDE (EXTERIOR) OF PRODUCT.

TEXAS DEPARTMENT OF INSURANCE – 2006

3/10/15

P.E. SEAL/SIGNATURE/DATE

WALTER A. TILLIT Jr. P.E.
PROFESSIONAL ENGINEER
6355 N.W. 36TH. ST., STE. 305
VIRGINIA GARDENS, FL. 33166
PHONE : (305) 871-1530 , FAX : (305) 871-1531
TEXAS LIC. # 90691
FIRM REGISTRATION # F-13790

40mm ER SLAT BERTHA ROLL-UP HURRICANE SHUTTER

AMERICAN SHUTTER SYSTEMS ASSOC., INC.
4268 WESTROADS DRIVE
WEST PALM BEACH, FL. 33407
PHONE: (877)999-2772 FAX: (561)209-8380

REV. No	DESCRIPTION	DATE	REV. No	DESCRIPTION	DATE
1	OLD 14-087	03/06/15	3		
2			4		

DRAWN BY: F.R.L.

03/06/15 DATE

15-013 DRAWING No

MULLION SCHEDULE FOR END RETENTION SYSTEM W/ SLAT③

SCHEDULE 1b' (LIMITED LOAD, MULLION SPACING & SPAN INSTALLATION)
FLOOR TO CEILING (TRAPPED) MOUNTING

MAX. SPAN (ft) FOR END AND INTERIOR MULLIONS FOR A GIVEN DESIGN LOAD (psf), AND FOR 8'-0" (CASES Ia & II) MAX. MULLION SPACING (ft) *

INSTALLATION CASES	A.S.D. DESIGN LOAD (p.s.f.)	MAXIMUM MULLION SPACING (ft)*	MAXIMUM MULLION SPAN (ft)				
			㉔ 4"x6"x1/4" MULLION		㉕ 4"x8"x1/4" MULLION		
			ORIENTATION #1	ORIENTATION # 2	ORIENTATION #1	ORIENTATION #1	ORIENTATION # 2
			(▭) ▣	(▯) ▣	(▭) ▣	(▭) ▣	(▯) ▣
			END	INTERIOR	END	INTERIOR	INTERIOR
CASE Ia	30.0	8'-0"	-	12' - 0"	12' - 0"	12' - 0"	12' - 0"
	35.0	8'-0"	-	12' - 0"	12' - 0"	12' - 0"	12' - 0"
	40.0	8'-0"	-	12' - 0"	12' - 0"	12' - 0"	12' - 0"
	45.0	8'-0"	-	12' - 0"	12' - 0"	12' - 0"	12' - 0"
	50.0	8'-0"	-	12' - 0"	12' - 0"	12' - 0"	12' - 0"
	55.0	8'-0"	-	12' - 0"	12' - 0"	11' - 8"	12' - 0"
	60.0	8'-0"	-	12' - 0"	11' - 10"	11' - 4"	12' - 0"
	60.8	8'-0"	-	12' - 0"	11' - 9"	11' - 4"	12' - 0"
CASE II	30.0	8'-0"	-	9' - 0"	9' - 0"	9' - 0"	9' - 0"
	35.0	8'-0"	-	9' - 0"	9' - 0"	9' - 0"	9' - 0"
	40.0	8'-0"	-	9' - 0"	9' - 0"	9' - 0"	9' - 0"
	45.0	8'-0"	-	9' - 0"	9' - 0"	9' - 0"	9' - 0"
	50.0	8'-0"	-	9' - 0"	9' - 0"	9' - 0"	9' - 0"
	55.0	8'-0"	-	9' - 0"	9' - 0"	9' - 0"	9' - 0"
	60.0	8'-0"	-	9' - 0"	9' - 0"	9' - 0"	9' - 0"
	65.0	8'-0"	-	9' - 0"	9' - 0"	9' - 0"	9' - 0"
	70.0	8'-0"	-	9' - 0"	9' - 0"	9' - 0"	9' - 0"
	75.0	8'-0"	-	9' - 0"	9' - 0"	9' - 0"	9' - 0"
	80.0	8'-0"	-	9' - 0"	9' - 0"	9' - 0"	9' - 0"

SCHEDULE 2b' (LIMITED LOAD, MULLION SPACING & SPAN INSTALLATION)
WALL MOUNTED

MAX. SPAN (ft) FOR END AND INTERIOR MULLIONS FOR A GIVEN DESIGN LOAD (psf), AND FOR 8'-0" (CASE II') MAX. MULLION SPACING (ft) *

INSTALLATION CASES	A.S.D. DESIGN LOAD (p.s.f.)	MAXIMUM MULLION SPACING (ft)*	MAXIMUM MULLION SPAN (ft)				
			㉔ 4"x6"x1/4" MULLION		㉕ 4"x8"x1/4" MULLION		
			ORIENTATION #1	ORIENTATION # 2	ORIENTATION #1	ORIENTATION #1	ORIENTATION # 2
			(▭) ▣	(▯) ▣	(▭) ▣	(▭) ▣	(▯) ▣
			END	INTERIOR	END	INTERIOR	INTERIOR
CASE II'	30.0	8'-0"	-	9' - 0"	9' - 0"	9' - 0"	9' - 0"
	35.0	8'-0"	-	9' - 0"	9' - 0"	9' - 0"	9' - 0"
	40.0	8'-0"	-	9' - 0"	9' - 0"	9' - 0"	9' - 0"
	45.0	8'-0"	-	9' - 0"	9' - 0"	9' - 0"	9' - 0"
	50.0	8'-0"	-	9' - 0"	9' - 0"	9' - 0"	9' - 0"
	55.0	8'-0"	-	9' - 0"	9' - 0"	9' - 0"	9' - 0"
	60.0	8'-0"	-	9' - 0"	9' - 0"	9' - 0"	9' - 0"
	65.0	8'-0"	-	9' - 0"	9' - 0"	9' - 0"	9' - 0"
	70.0	8'-0"	-	9' - 0"	9' - 0"	9' - 0"	9' - 0"
	75.0	8'-0"	-	9' - 0"	9' - 0"	9' - 0"	9' - 0"
	80.0	8'-0"	-	9' - 0"	9' - 0"	9' - 0"	9' - 0"

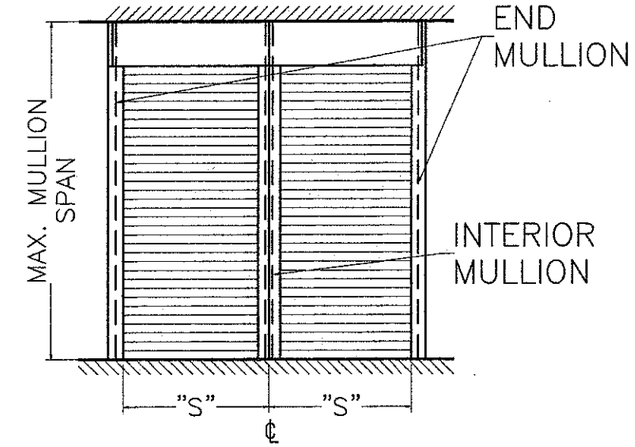

MULLION SPACING: "S"

* MAXIMUM MULLION SPACING SHALL BE SUCH THAT MAX. ALLOWABLE SLAT SPAN FOR THAT DESIGN LOAD SHALL NOT BE EXCEEDED.

† MULLION ORIENTATION IS AS SEEN FROM THE OUTSIDE (EXTERIOR) OF PRODUCT.

TEXAS DEPARTMENT OF INSURANCE – 2006

STATE OF TEXAS
3/10/15
WALTER A. TILLIT JR.
P.E. SEAL/SIGNATURE/DATE

WALTER A. TILLIT Jr. P.E.
PROFESSIONAL ENGINEER
6355 N.W. 36TH. ST., STE. 305
VIRGINIA GARDENS, FL. 33166
PHONE : (305) 871-1530 , FAX : (305) 871-1531
TEXAS LIC. # 90691
FIRM REGISTRATION # F-13790

40mm ER SLAT BERTHA ROLL-UP HURRICANE SHUTTER

AMERICAN SHUTTER SYSTEMS ASSOC., INC.
4268 WESTROADS DRIVE
WEST PALM BEACH, FL. 33407
PHONE: (877)999-2772 FAX: (561)209-8380

REV. No	DESCRIPTION	DATE	REV. No	DESCRIPTION	DATE
1	OLD 14-087	03/06/15	3		
2			4		

DRAWN BY: F.R.L.
03/06/15 DATE
15-013 DRAWING No
SHEET 29 OF 29