GENERAL NOTES:

1. ACCORDION SHUTTER SHOWN ON THIS PRODUCT EVALUATION DOCUMENT (P.E.D.) HAS BEEN VERIFIED FOR COMPLIANCE IN ACCORDANCE WITH THE 2006 EDITIONS OF THE INTERNATIONAL BUILDING CODE, (I.B.C.) AND INTERNATIONAL RESIDENTIAL CODE, (I.R.C.) WITH THE 2006 TEXAS REVISIONS, EFFECTIVE JANUARY 1, 2008.
   THIS ACCORDION SHUTTER MAY BE INSTALLED AT SEAWARD AND INLAND AREAS, AS DEFINED BY THE TEXAS DEPARTMENT OF INSURANCE.
   DESIGN WIND LOADS SHALL BE DETERMINED AS PER SECTION 1609 OF THE OF THE INTERNATIONAL BUILDING CODE, FOR A BASIC WIND SPEED AS REQUIRED BY THE JURISDICTION WHERE SHUTTER WILL BE INSTALLED, AND FOR A DIRECTIONALITY FACTOR KD=0.85, IN ACCORDANCE W/ ASCE 7-05 STANDARD. IN ORDER TO VERIFY THAT COMPONENTS AND ANCHORS ON THIS P.E.D. AS TESTED WERE NOT OVER STRESSED, A 33% INCREASE IN ALLOWABLE STRESS FOR WIND LOADS WAS NOT USED IN THEIR ANALYSIS. FASTENERS SPACING TO WOOD HAS BEEN DETERMINED IN ACCORDANCE WITH N.D.S. 2005.

   ACCORDION SHUTTER SYSTEM'S ADEQUACY FOR IMPACT AND WIND RESISTANCE HAS BEEN VERIFIED IN ACCORDANCE WITH SECTION 1609.1.2 OF THE ABOVE MENTIONED CODE AS PER FENESTRATION TESTING LABORATORY REPORTS: #5534 AND 5644 AS PER FLORIDA BUILDING CODE TAS-201, TAS-202 AND TAS-203 PROTOCOLS.

2. **MID-PRESSURE & HI-PRESSURE BLADES** ARE ENGINEERED TO WORK IN UNISON WITH EACH OTHER IN AREAS WHERE THE DESIGN PRESSURES TRANSITION FROM END ZONE 5 TO INTERIOR ZONE 4. EACH WIND ZONE MUST BE CLEARLY IDENTIFIED IN ACCORDANCE WITH SECTION 7, OF ASCE 7-05 STANDARD. ALL MOUNTING CONDITIONS AND FASTENER TYPES SCHEDULES MUST BE APPLIED TO THE CORRESPONDING WIND ZONE. THIS SHALL INCLUDE REQUIREMENTS FOR MIN. SEPARATION TO GLASS. DELIMITATION OF WIND ZONES 4 AND 5 AS WELL AS VALIDITY OF COMPONENTS FOR **MID-PRESSURE & HI-PRESSURE BLADES** ACCORDION SHUTTERS SYSTEMS FOR EITHER WIND ZONE SHALL BE PREPARED AND CERTIFIED BY A PROFESSIONAL REGISTERED ENGINEER OR ARCHITECT BASED ON BUILDING CONFIGURATION AND ASCE 7-05 STANDARD, AND SHALL BE SUBMITTED TO THE BUILDING OFFICIAL AT THE TIME PERMIT IS APPLIED FOR.

3. STAINLESS STEEL SHEET METAL SCREWS USED AT LOUVER PIN SHALL BE # 14 x 2 3/4", 310-HT MINIMUM SERIES W/ 135.0 ksi YIELD STRENGTH & 180 ksi TENSILE STRENGTH. SCREWS SHALL BE COATED WITH XYLAN 5000 SERIES FLUOROPOLYMER COATINGS AS MANUFACTURED BY WHITFORD Co, BOX 507. WEST CHESTER PA. 19381.

4. ALL ALUMINUM EXTRUSIONS SHALL BE ALUMINUM ASSOCIATION ALLOY AND TEMPER AS INDICATED ON SHEET 2. MINIMUM YIELD STRENGTH FOR 6063-T6 ALLOY IS Fy=25.0 ksi. & FOR 6063-T5 ALLOY IS Fy=18.3 ksi.

5. ALL SCREWS & BOLTS INSTALLED AT SEAWARD AREAS TO BE STAINLESS STEEL 304 OR 316 AISI SERIES AND MEET ASTM A167, OR HOT DIPPED GALVANIZED (AFTER FABRICATION) CARBON STEEL AS PER ASTM A123 OR ASTM A153, OR HOT DIPPED GALVANIZED OR GALVANNEALED (PRIOR TO FABRICATION) AND MEET ASTM A653 WITH 50 KSI YIELD STRENGTH AND 90 KSI TENSILE STRENGTH, PER 2006 TEXAS REVISIONS TO SECTION 1716.1.1 OF THE 2006 I.B.C. AND SECTION R325.1.1 OF THE 2006 I.R.C.

6. ALL SCREWS & BOLTS INSTALLED AT INLAND I AREAS TO BE STAINLESS STEEL 304 OR 316 AISI SERIES AND MEET ASTM A167, OR HOT DIPPED GALVANIZED (AFTER FABRICATION) CARBON STEEL AS PER ASTM A123 OR ASTM A153, OR HOT DIPPED GALVANIZED OR GALVANNEALED (PRIOR TO FABRICATION) AND MEET ASTM A653; HOT DIP GALVANIZED OR ELECTRO GALVANIZED PER ASTM A641, MECHANICALLY DEPOSITED ZINC COATINGS PER ASTM B695 OR ELECTRO DEPOSITED ZINC COATINGS PER ASTM B633, PER THE 2006 TEXAS REVISIONS TO SECTION 1716.1.2 OF THE 2006 I.B.C. AND TO SECTION R325.1.2 OF THE 2006 I.R.C.

7. ANCHORS TO WALL SHALL BE AS FOLLOWS: (UNLESS OTHERWISE NOTED)

   (A) TO EXISTING POURED CONCRETE: f'c PER SCHEDULE ON SHEETS 10 & 15
   - 1/4" ø TAPCON, AS MANUFACTURED BY I.T.W. BUILDEX, INC.
   - 5/16"ø TAPCON XL ANCHORS, AS MANUFACTURED BY I.T.W. BUILDEX, INC.
   - 1/4" ø x 7/8" CALK-IN ANCHORS AS MANUFACTURED BY POWERS FASTENERS, INC.

   NOTES:

   A.1) MINIMUM EMBEDMENT OF 1/4"ø TAPCON ANCHORS INTO CONCRETE IS 1 3/4" & FOR 5/16"ø TAPCON XL ANCHORS INTO CONCRETE IS 2 1/4".

   A.2) 7/8" CALK-IN ANCHORS SHALL BE ENTIRELY EMBEDDED INTO THE POURED CONCRETE. NO EMBEDMENT INTO STUCCO SHALL BE PERMITTED.
   1/4 ø-20 S.S SCREWS USED SHALL BE 1 1/2" LONG MINIMUM SHOULD STUCCO EXIST.

   A.3) IN CASE THAT PRECAST STONE, PRECAST CONCRETE PANELS, OR PAVERS BE FOUND ON THE EXISTING WALL FLOOR, ANCHORS SHALL BE LONG ENOUGH TO REACH THE MAIN STRUCTURE BEHIND SUCH PANELS. ANCHORAGE SHALL BE AS INDICATED ON NOTES A.1 & A.2 ABOVE.

   (B) TO EXISTING CONCRETE BLOCK WALL: ASTM C-90.
   - 1/4" ø TAPCON OR 1/4"ø MAXI-SET TAPCON, AS MANUFACTURED BY I.T.W. BUILDEX, INC.
   - 5/16"ø TAPCON XL ANCHORS, AS MANUFACTURED BY I.T.W. BUILDEX, INC.
   - 1/4" ø x 7/8" CALK-IN ANCHORS AS MANUFACTURED BY POWERS FASTENERS, INC.

   NOTES:

   B.1) MINIMUM EMBEDMENT OF 1/4"ø TAPCON ANCHORS & 5/16"ø TAPCON XL ANCHORS, INTO CONCRETE BLOCK UNIT IS 1 1/4".

   B.2) 7/8" CALK-IN ANCHORS SHALL BE ENTIRELY EMBEDDED INTO THE CONCRETE BLOCK UNIT. NO EMBEDMENT INTO STUCCO SHALL BE PERMITTED.
   1/4" ø-20 S.S SCREWS USED SHALL BE 1 1/2" LONG MINIMUM SHOULD STUCCO EXIST AND 1" MINIMUM FOR WALLS WITH NO STUCCO.

   B.3) IN CASE THAT PRECAST STONE OR PRECAST CONCRETE PANELS BE FOUND ON THE EXISTING WALL, ANCHORS SHALL BE LONG ENOUGH TO REACH THE MAIN STRUCTURE BEHIND SUCH PANELS. ANCHORAGE SHALL BE AS INDICATED ON NOTES B.1 & B.2 ABOVE.

   (C) TO EXISTING WOOD FRAME BUILDING: SOUTHERN PINE #2 W/ G=0.55 MIN.
   - 1/4"ø TAPCON ITW/BUILDEX, INC. PER N.D.S.

   NOTES:

   C.1) MINIMUM THREADED PENETRATION OF 1/4"ø TAPCON INTO THE WOOD FRAME UNIT SHALL SEE SECTION AW THRU DW ON SHEETS 7 & 8, NO THREADED PENETRATION INTO STUCCO SHALL BE CONSIDERED AS PART OF THE REQUIRED THREADED PENETRATION.

   C.2) MINIMUM EDGE DISTANCE OF 1/4"ø TAPCON INTO WOOD SHALL BE 2"

   C.3) IN CASE THAT PRECAST STONE, PRECAST CONCRETE OR BRICK PANELS, VENEER OR PAVERS BE FOUND ON THE EXISTING WALL, ANCHORS SHALL BE LONG ENOUGH TO REACH THE MAIN SUBSTRATE BEHIND SUCH PANELS. MINIMUM THREADED PENETRATION SHALL BE AS INDICATED ON NOTE C.1 ABOVE.

8. ANCHORS SHALL BE INSTALLED FOLLOWING ALL OF THE RECOMMENDATIONS AND SPECIFICATIONS OF THE ANCHORS MANUFACTURER.

9. IT SHALL BE THE RESPONSIBILITY OF THE CONTRACTOR TO VERIFY THE SOUNDNESS OF THE STRUCTURE WHERE SHUTTER IS TO BE ATTACHED TO INSURE PROPER ANCHORAGE. THIS SHUTTER SHALL ONLY BE ATTACHED TO CONCRETE, BLOCK OR WOOD FRAME BUILDINGS.

10. THE INSTALLATION CONTRACTOR IS TO SEAL/CAULK ALL PRODUCT'S COMPONENT EDGES WHICH REMAIN IN CONTINUOUS CONTACT WITH THE BUILDING TO PREVENT WIND /RAIN INTRUSION. CAULK AND SEAL PRODUCT'S COMPONENTS ALL AROUND FULL LENGTH.

11. EACH UNIT MUST BEAR PERMANENT LABEL IN A VISIBLE PLACE WITH WARNING NOTE: DURING PERIODS OF HURRICANE WARNINGS HOME OWNER, TENANT, OR OTHERS, MUST PROPERLY CLOSE ALL CENTERMATES AND ENGAGE OR LOCK ALL LOCKS.

12. SHUTTER MANUFACTURER'S LABEL SHALL BE LOCATED ON A READILY VISIBLE LOCATION AT ACCORDION SHUTTER IN ONE LABEL SHALL BE PLACED FOR EVERY OPENING. LABELING SHALL INDICATE MANUFACTURER'S NAME, PRODUCT NAME AND FLORIDA BUILDING CODE TAS-201, TAS-202 (ASTM E 330) AND TAS-203.

13. ACCORDION SHUTTER SYSTEM'S INSTALLATION SHALL COMPLY WITH SPECS INDICATED IN THIS DRAWING PLUS ANY BUILDING AND ZONING REGULATIONS PROVIDED BY THE JURISDICTION WHERE PERMIT IS APPLIED TO.

14. (A) THIS PRODUCT EVALUATION DOCUMENT (P.E.D.) PREPARED BY THIS ENGINEER IS GENERIC AND DOES NOT PROVIDE INFORMATION FOR A SITE SPECIFIC PROJECT; i.e. WHERE THE SITE CONDITIONS DEVIATE FROM THE P.E.D.

    (B) CONTRACTOR TO BE RESPONSIBLE FOR THE SELECTION, PURCHASE AND INSTALLATION INCLUDING LIFE SAFETY OF THIS PRODUCT BASED ON THIS PRODUCT EVALUATION DOCUMENT PROVIDED HE/SHE DOES NOT DEVIATE FROM THE CONDITIONS DETAILED ON THIS DOCUMENT. CONSTRUCTION SAFETY AT SITE IS THE CONTRACTOR'S RESPONSIBILITY.

    (C) THIS PRODUCT EVALUATION DOCUMENT WILL BE CONSIDERED INVALID IF MODIFIED.

    (D) SITE SPECIFIC PROJECTS SHALL BE PREPARED BY A PROFESSIONAL REGISTERED ENGINEER OR ARCHITECT WHICH WILL BECOME THE ENGINEER OF RECORD (E.O.R.) FOR THE PROJECT AND WHO WILL BE RESPONSIBLE FOR THE PROPER USE OF THE P.E.D. ENGINEER OF RECORD, ACTING AS DELEGATED ENGINEER TO THE P.E.D. ENGINEER, SHALL SUBMIT TO THIS LATTER THE SITE SPECIFIC DRAWINGS FOR REVIEW.

    (E) THIS P.E.D. SHALL BEAR THE DATE AND ORIGINAL SEAL AND SIGNATURE OF THE PROFESSIONAL ENGINEER THAT PREPARED IT.

TEXAS DEPARTMENT OF INSURANCE (T.D.I.)- 2006

WALTER A. TILLIT Jr. P.E.
PROFESSIONAL ENGINEER

6355 N.W. 36TH. ST., STE. 305
VIRGINIA GARDENS, FL. 33166
PHONE : (305) 871-1530 , FAX : (305) 871-1531

TEXAS LIC. # 90691

MID-PRESSURE AND HI-PRESSURE BLADES ACCORDION SHUTTER SYSTEM

B & C METALS ENTERPRISE
8315 NW 74 STREET
MIAMI, FLORIDA 33166
PHONE:(305) 406-0944 / FAX:(305) 406-0946

REV. NO	DESCRIPTION	DATE	REV. No	DESCRIPTION	DATE
1	-	-	3	-	-
2	-	-	4	-	-

DRAWN BY: I.A.

08/14/09
DATE

09-151
DRAWING No

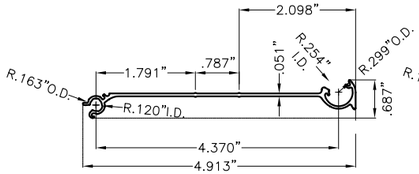

1 MID–PRESSURE BLADE
6063–T5 ALLOY

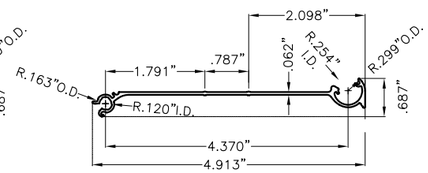

2 HI–PRESSURE BLADE
6063–T5 ALLOY

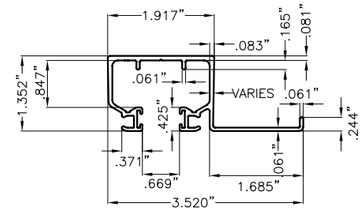

3 CEILING HEADER FOR 1 & 2
6063–T6 ALLOY

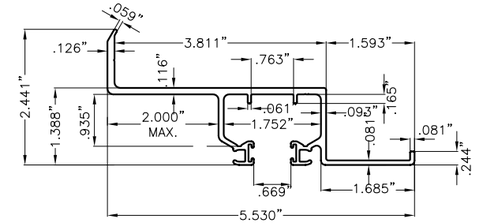

7 WALL MOUNT HEADER FOR 1 & 2
6063–T6 ALLOY

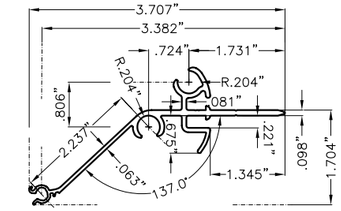

8 SLIM CENTERMATE FOR 1
6063–T6 ALLOY

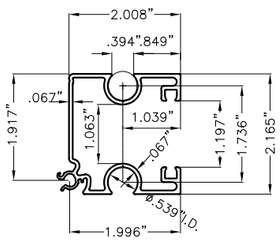

9 LARGE CENTERMATE FOR 2
6063–T6 ALLOY

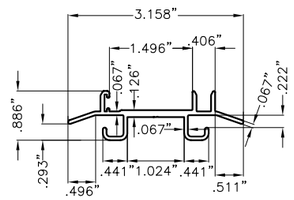

10 INSERT FOR 9
6063–T6 ALLOY

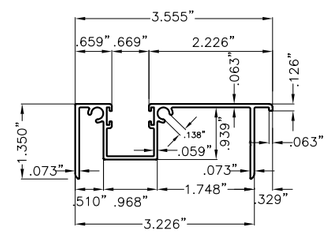

11 SILL FOR 1 & 2
6063–T6 ALLOY

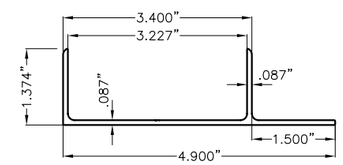

12 SILL ADJUSTABLE FOR 11
6063–T6 ALLOY

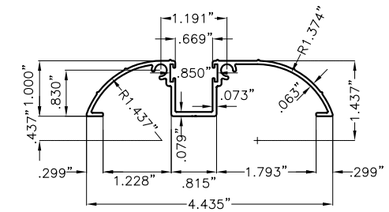

13 THRESHOLD FOR 1 & 2
6063–T6 ALLOY

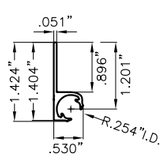

14 STARTER
6063–T6 ALLOY

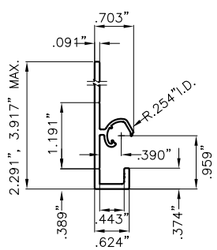

15 ENCLOSURE
6063–T6 ALLOY

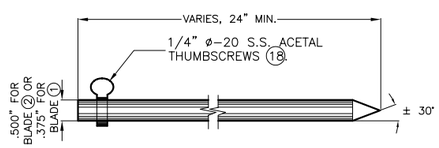

16 LOCKING ROD FOR 1 & 2
6063–T6 ALLOY AND TEMPER

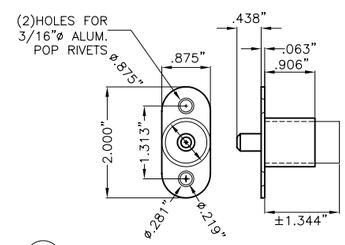

17 PUSH BUTTON LOCK FOR 8

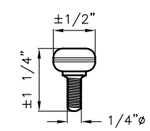

18 1/4"ø–20 AISI 304 SERIES S.S. THUMBSCREWS FOR 16

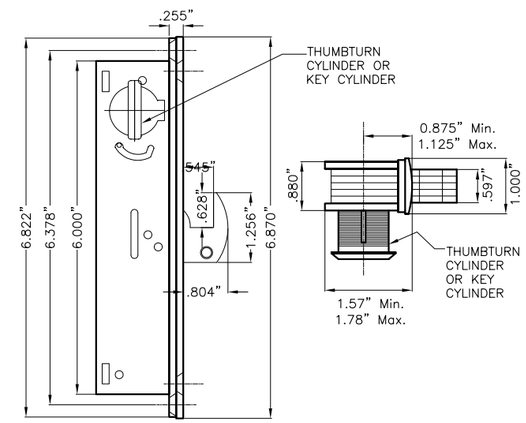

23 MORTISE LOCK FOR 9
6063–T6 ALLOY

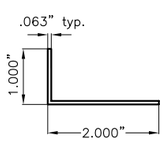

19 ANGLE 1"x2"x1/16" FOR 1 & 2
6063–T6 ALLOY

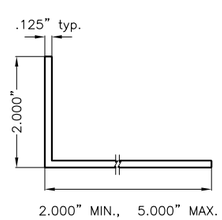

20 ANGLE 2"x5"(MAX.)x1/8" FOR 1 & 2
6063–T6 ALLOY

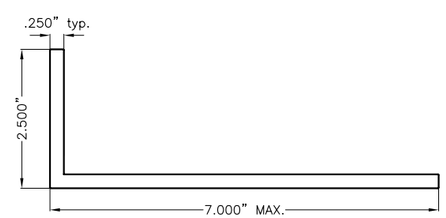

21 ANGLE 2.500"x7"(MAX.)x1/4" FOR 2
6063–T6 ALLOY

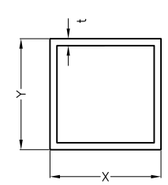

X	Y	t
2"	2"	0.125"
3"	3"	0.090"

22 CORNER POST FOR 1 & 2
6063–T6 ALLOY

COMPONENTS

SCALE: 3/8"=1"

TEXAS DEPARTMENT OF INSURANCE (T.D.I.)– 2006

WALTER A. TILLIT Jr. P.E.
PROFESSIONAL ENGINEER

6355 N.W. 36TH. ST., STE. 305
VIRGINIA GARDENS, FL. 33166
PHONE : (305) 871–1530 , FAX : (305) 871–1531

TEXAS LIC. # 90691

MID–PRESSURE AND HI–PRESSURE BLADES
ACCORDION SHUTTER SYSTEM

B & C METALS ENTERPRISE
8315 NW 74 STREET
MIAMI, FLORIDA 33166
PHONE:(305) 406–0944 / FAX:(305) 406–0946

REV. NO	DESCRIPTION	DATE	REV. No	DESCRIPTION	DATE
1	–	–	3	–	–
2	–	–	4	–	–

DRAWN BY: I.A.

08/14/09
DATE

09–151
DRAWING No

♦ NOTES ON LOCK (17) & LOCKING RODS (16)

1. ONE LOCK (17) SHALL ALWAYS BE USED AT SHUTTER'S MIDSPAN AT ALL INSTALLATIONS. LOCK MAY BE INSIDE/OUTSIDE INSTALLED ATTACHED TO (8) W/(2) 1/4"ø–20x1/2" LONG FLAT HEAD S.S. M.S. LOCATION OF LOCK SHALL BE AS SHOWN ON TYPICAL SHUTTER ELEVATION.

2. (2) LOCKING RODS (16) SHALL ALWAYS BE USED TOP & BOTTOM AT SHUTTER'S CENTERMATES (8) AT ALL INSTALLATIONS. LOCKING RODS (16) SHALL BE SECURED W/ 1/4"–20 THUMBSCREW (18).

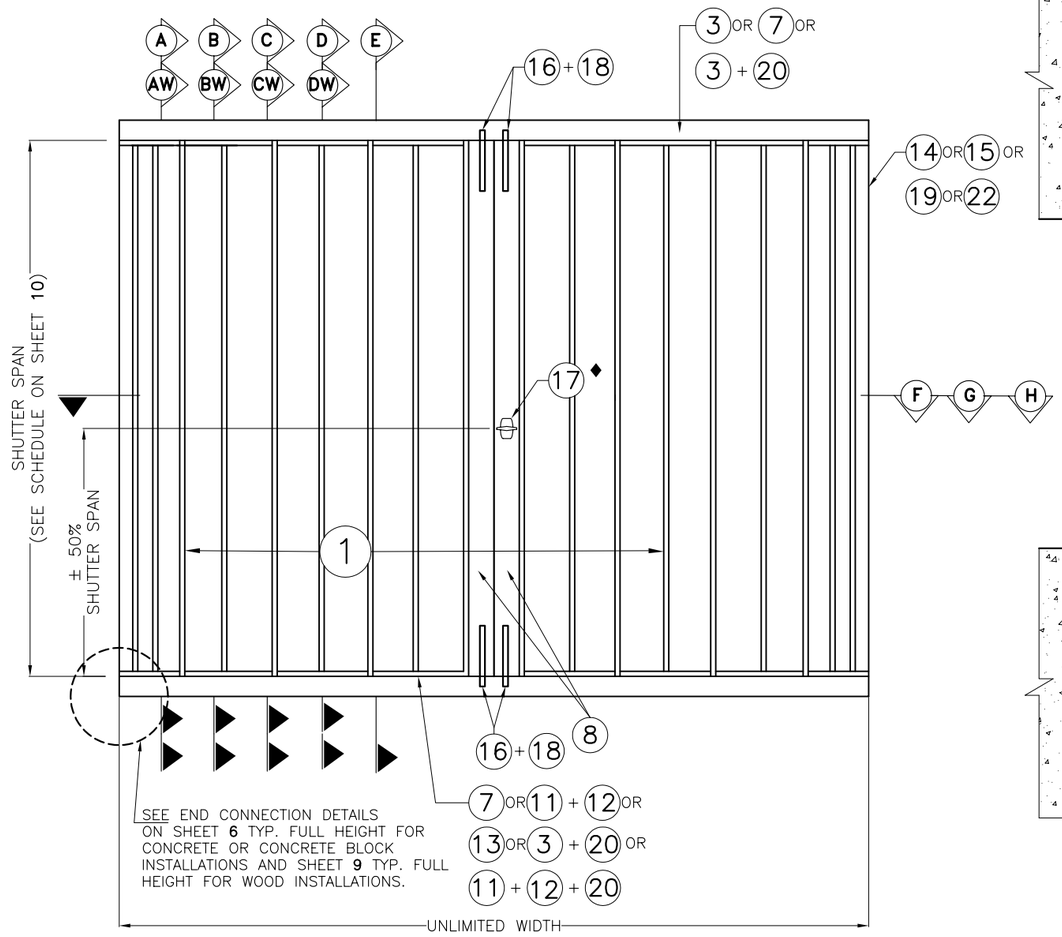

TYPICAL ELEVATION FOR MID–PRESSURE BLADE ♣

N. T. S.

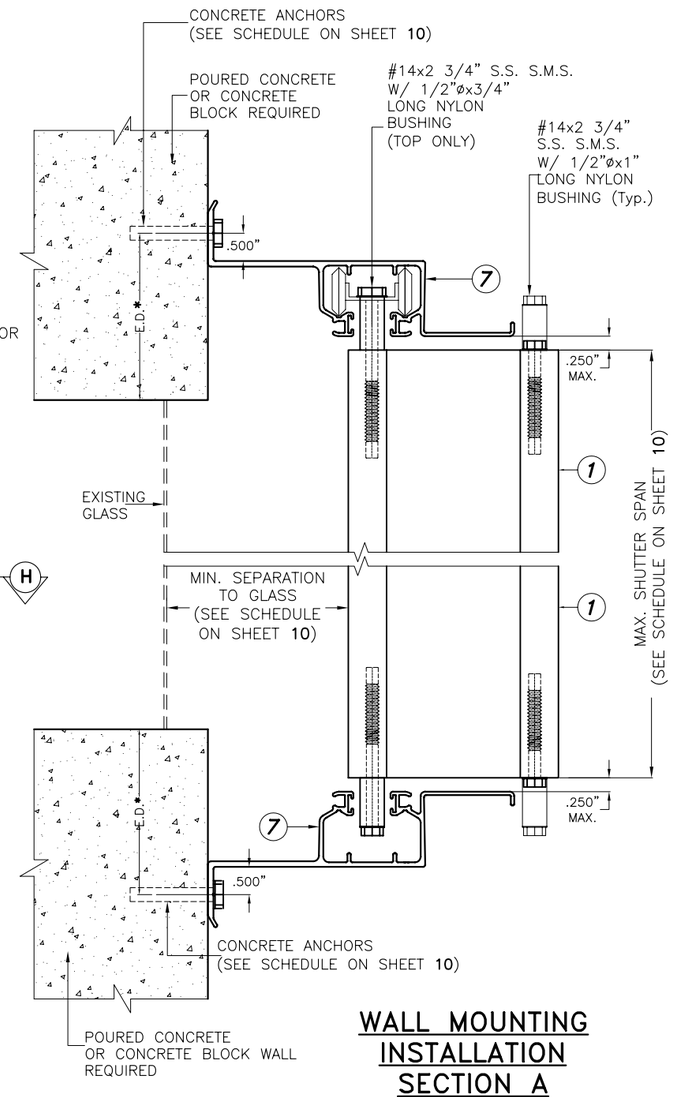

WALL MOUNTING INSTALLATION SECTION A

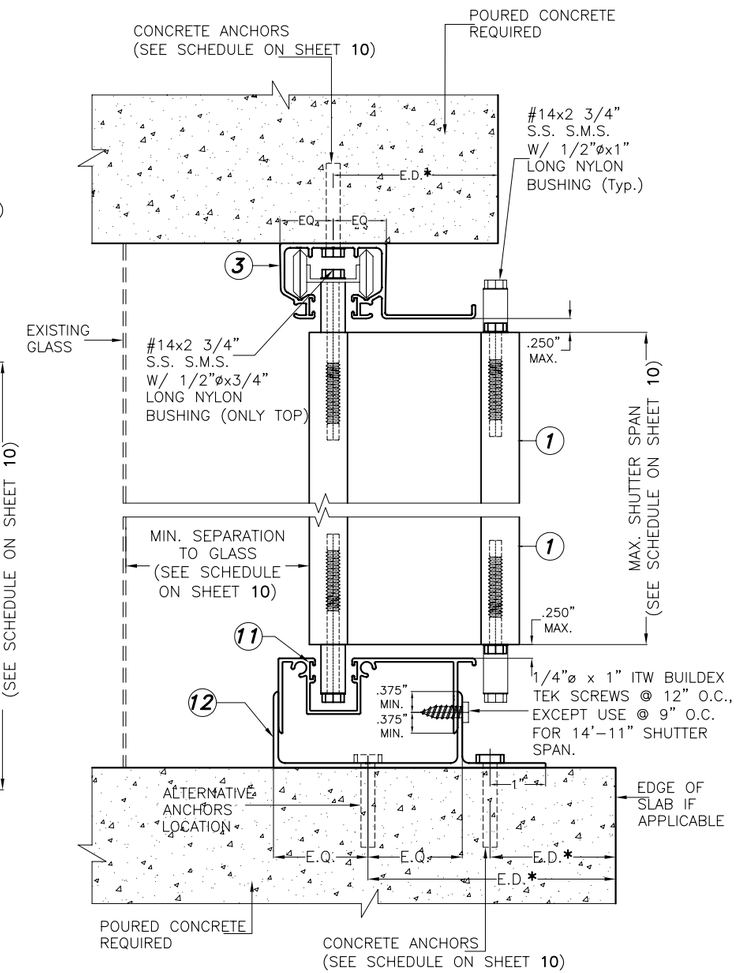

CEILING & FLOOR** MOUNTING INSTALLATION SECTION B

INSTALLATIONS DETAILS FOR MID–PRESSURE BLADE

SCALE : 3/8" = 1"

♣ NOTE:
SEE SECTIONS **A** THRU **D** ON SHEETS **3** & **4**.
SEE SECTIONS **AW** THRU **DW** ON SHEETS **7** & **8**.

NOTE FOR COMBINATION OF SECTIONS:

1– MOUNTING SECTIONS CAN BE COMBINED IN ANY WAY TO SUIT ANY INSTALLATION.

* E.D. = EDGE DISTANCE (SEE SPECIFICATIONS ON SHEET 10)

** NOTE:

THIS INSTALLATION SHALL BE REMOVABLE WHEN PERFORMED ADJACENT TO AN OPERABLE EXIT OR ENTRANCE

TEXAS DEPARTMENT OF INSURANCE (T.D.I.)– 2006

WALTER A. TILLIT Jr. P.E.
PROFESSIONAL ENGINEER
6355 N.W. 36TH. ST., STE. 305
VIRGINIA GARDENS, FL. 33166
PHONE : (305) 871–1530 , FAX : (305) 871–1531
TEXAS LIC. # 90691

MID–PRESSURE AND HI–PRESSURE BLADES ACCORDION SHUTTER SYSTEM

B & C METALS ENTERPRISE
8315 NW 74 STREET
MIAMI, FLORIDA 33166
PHONE:(305) 406–0944 / FAX:(305) 406–0946

REV. NO	DESCRIPTION	DATE	REV. No	DESCRIPTION	DATE
1	–	–	3	–	–
2	–	–	4	–	–

DRAWN BY: I.A.
08/14/09 DATE
09–151 DRAWING No
SHEET 3 OF 15

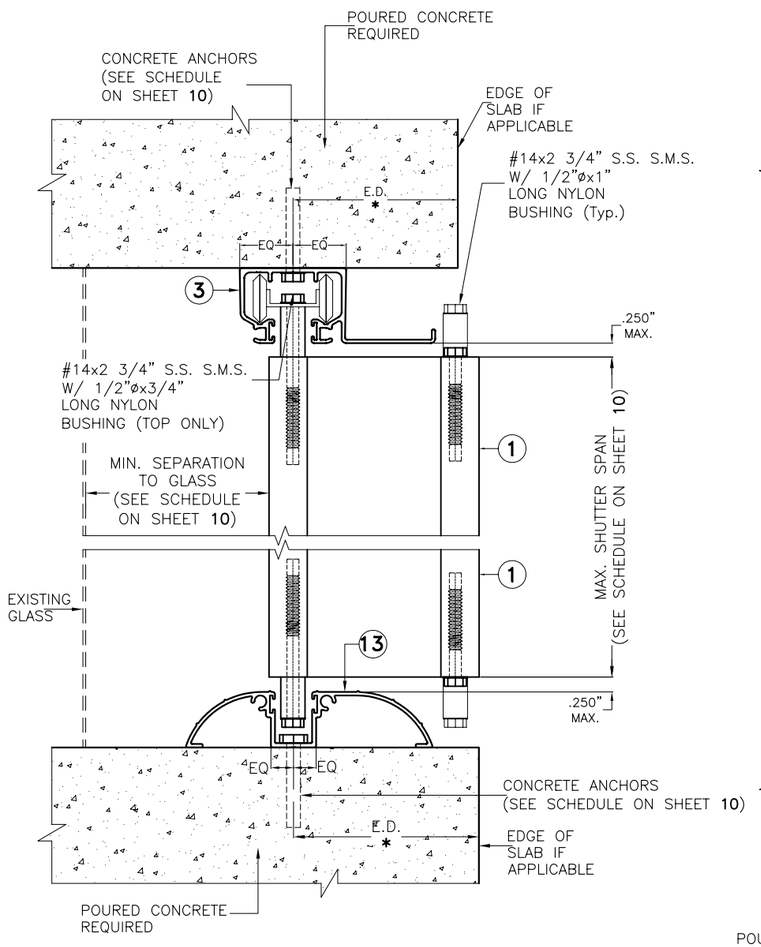

SPECIAL CEILING & FLOOR MOUNTING INSTALLATION SECTION C

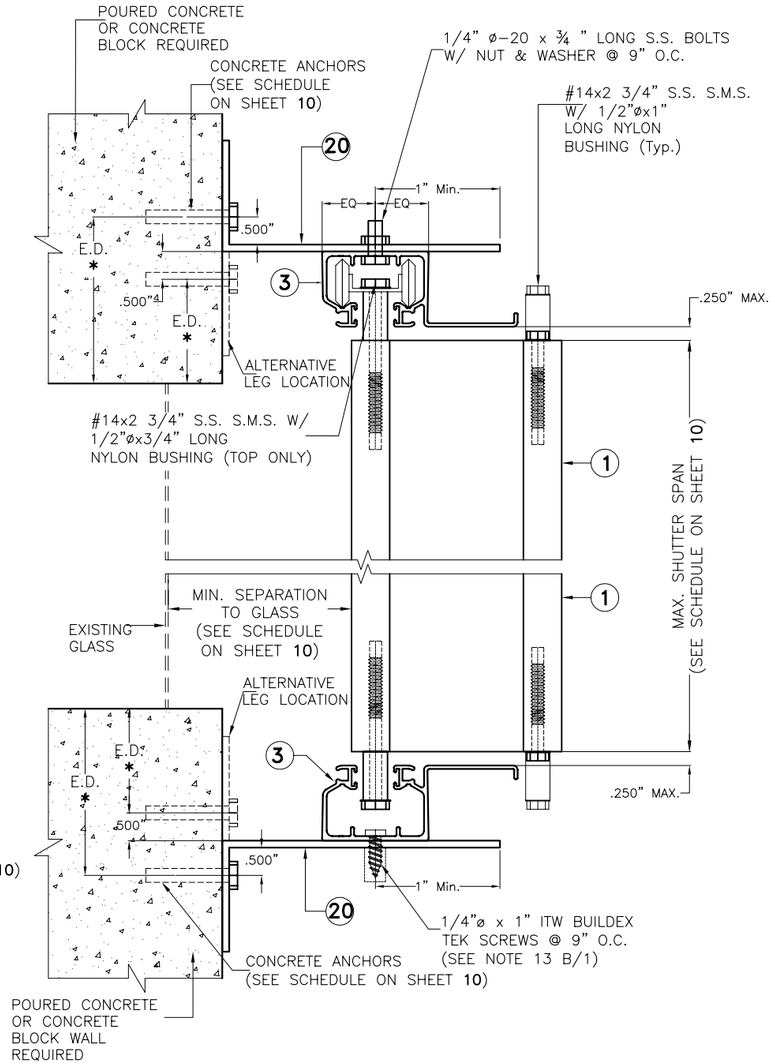

BUILD-OUT INSTALLATION SECTION D

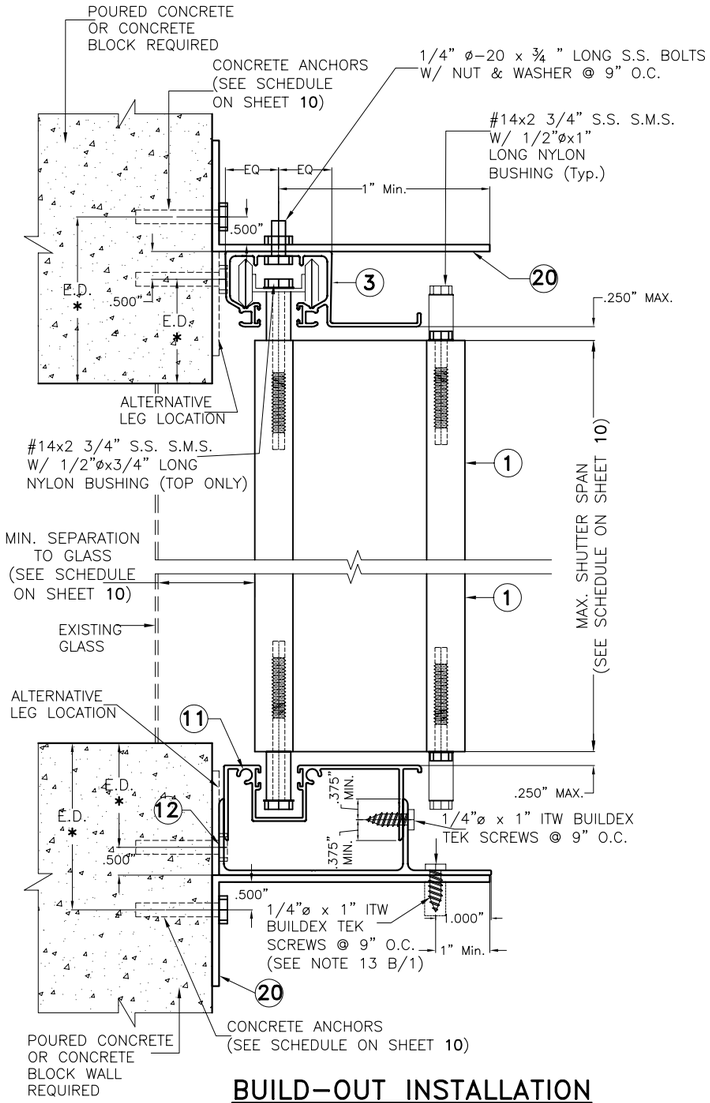

BUILD-OUT INSTALLATION HEADER & SILL SECTION E

INSTALLATIONS DETAILS FOR MID-PRESSURE BLADE

SCALE : 3/8" = 1"

NOTE FOR COMBINATION OF SECTIONS:

1- MOUNTING SECTIONS CAN BE COMBINED IN ANY WAY TO SUIT ANY INSTALLATION.

* E.D. = EDGE DISTANCE (SEE SPECIFICATIONS ON SHEET 10)

TEXAS DEPARTMENT OF INSURANCE (T.D.I.)- 2006

WALTER A. TILLIT Jr. P.E.
PROFESSIONAL ENGINEER
6355 N.W. 36TH. ST., STE. 305
VIRGINIA GARDENS, FL. 33166
PHONE : (305) 871-1530 , FAX : (305) 871-1531
TEXAS LIC. # 90691

MID-PRESSURE AND HI-PRESSURE BLADES ACCORDION SHUTTER SYSTEM

B & C METALS ENTERPRISE
8315 NW 74 STREET
MIAMI, FLORIDA 33166
PHONE:(305) 406-0944 / FAX:(305) 406-0946

REV. NO	DESCRIPTION	DATE	REV. No	DESCRIPTION	DATE
1	-	-	3	-	-
2	-	-	4	-	-

DRAWN BY: I.A.

08/14/09 DATE

09-151 DRAWING No

SHEET 4 OF 15

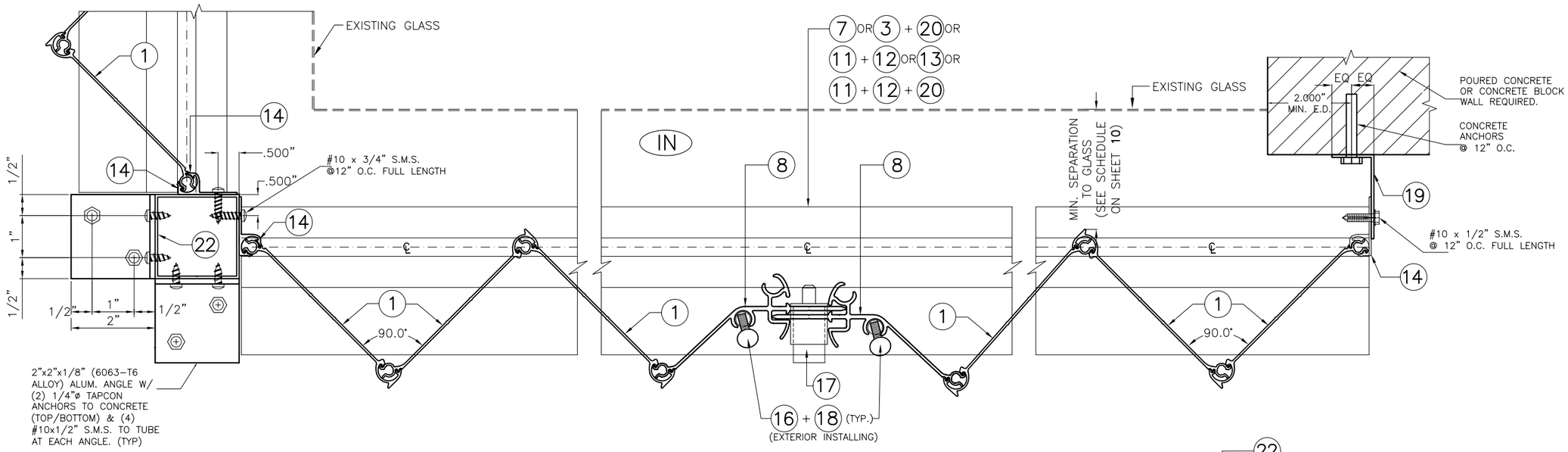

SECTION F

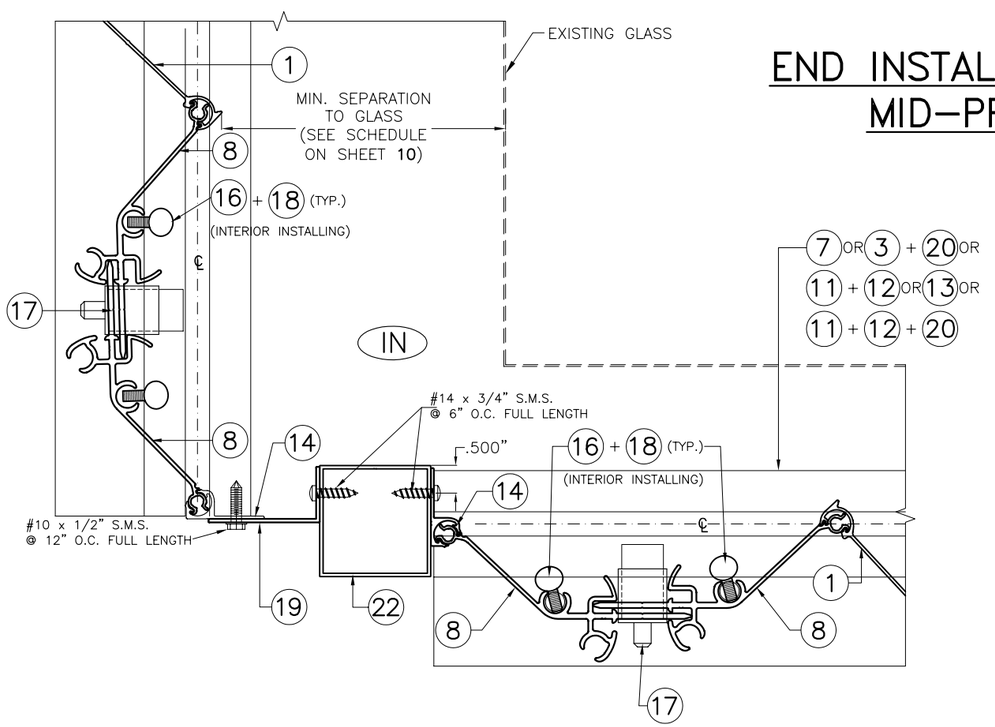

SECTION G

END INSTALLATION DETAILS FOR MID-PRESSURE BLADE

SCALE : 3/8" = 1"

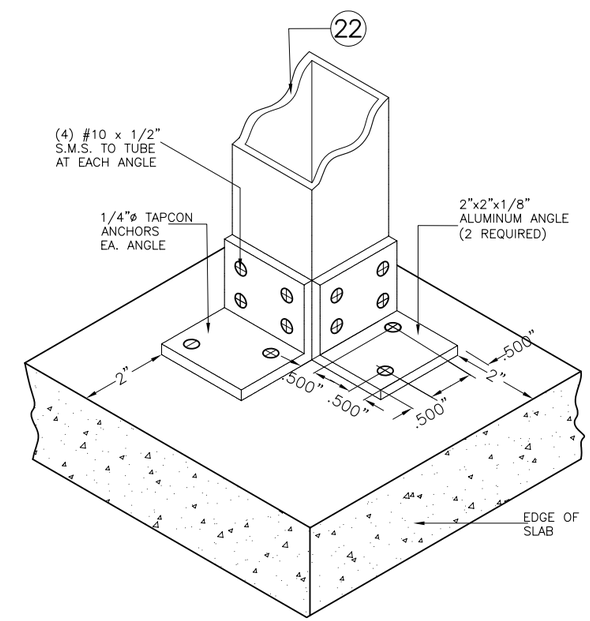

CORNER POST ISOMETRIC

(TYP. AT TOP AND BOTTOM SLABS)
N.T.S.

TEXAS DEPARTMENT OF INSURANCE (T.D.I.)– 2006

WALTER A. TILLIT Jr. P.E.
PROFESSIONAL ENGINEER

6355 N.W. 36TH. ST., STE. 305
VIRGINIA GARDENS, FL. 33166
PHONE : (305) 871-1530 , FAX : (305) 871-1531

TEXAS LIC. # 90691

MID-PRESSURE AND HI-PRESSURE BLADES ACCORDION SHUTTER SYSTEM

B & C METALS ENTERPRISE
8315 NW 74 STREET
MIAMI, FLORIDA 33166
PHONE:(305) 406-0944 / FAX:(305) 406-0946

DRAWN BY: I.A.

08/14/09 DATE

09-151 DRAWING No

REV. NO	DESCRIPTION	DATE	REV. No	DESCRIPTION	DATE
1	–	–	3	–	–
2	–	–	4	–	–

INSTALLATION FOR MID–PRESSURE BLADE INTO CONCRETE OR CONCRETE BLOCK WALL

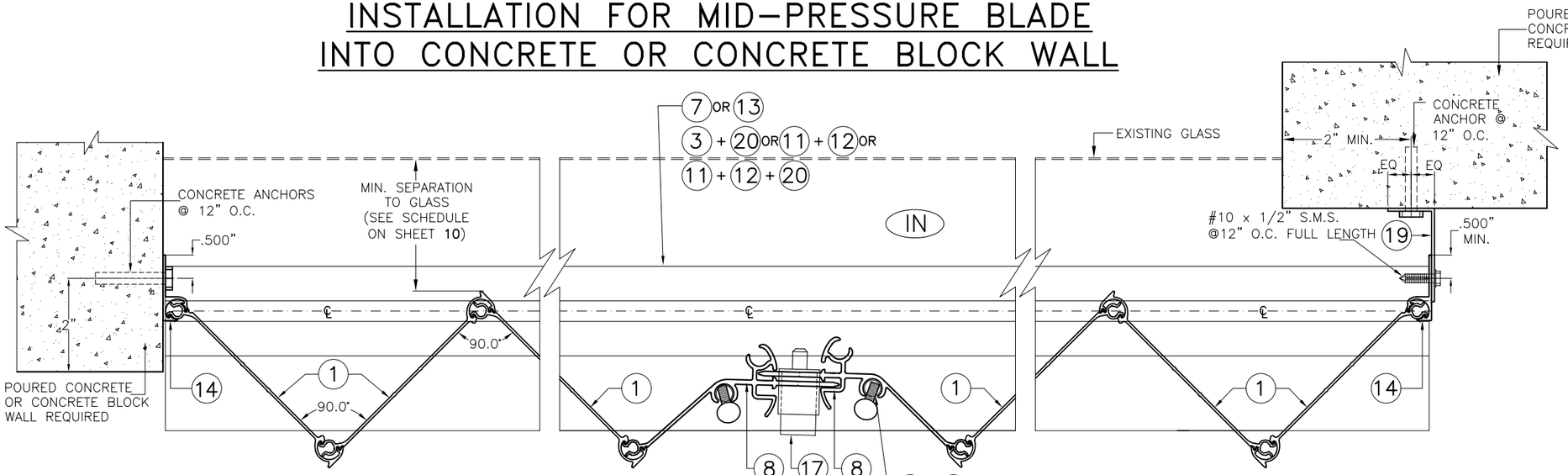

SECTION H

SCALE : 3/8" = 1"

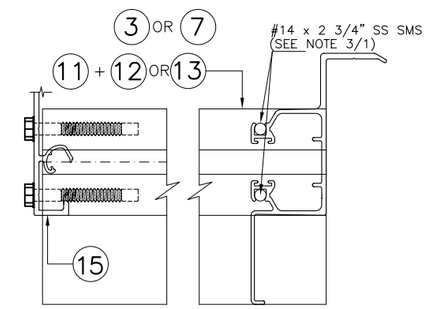

PLAN VIEW Y DETAIL Z

SCALE : 3/8" = 1"

END INSTALLATIONS FOR MID–PRESSURE BLADE

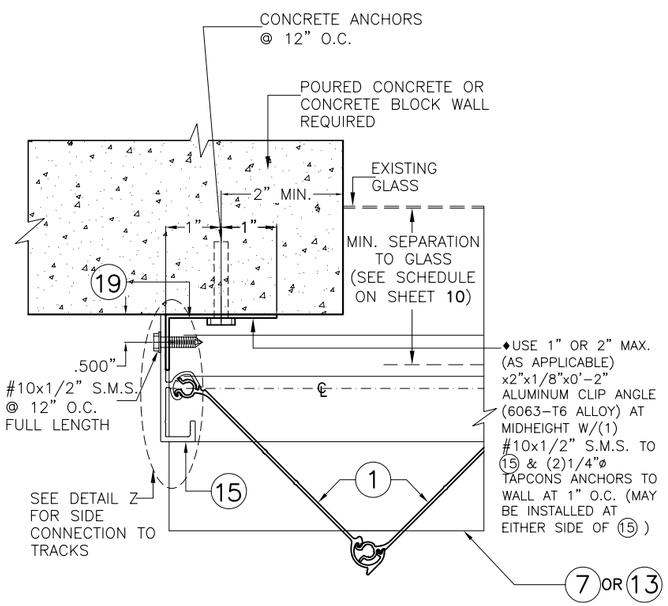

END CONECTION DETAIL 1

SCALE : 3/8" = 1"

7 OR 13
3 + 20 OR 11 + 12
11 + 12 + 20

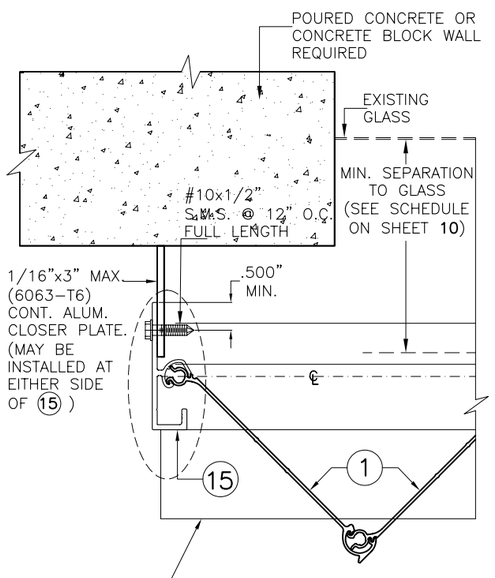

END CONECTION DETAIL 2

SCALE : 3/8" = 1"

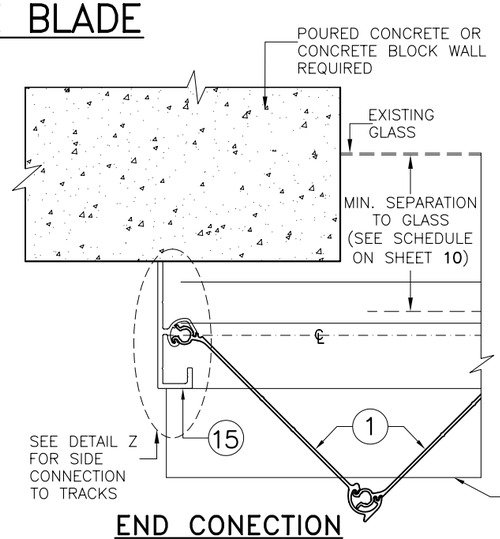

END CONECTION DETAIL 3

SCALE : 3/8" = 1"

7 OR 13
3 + 20 OR 11 + 12
11 + 12 + 20

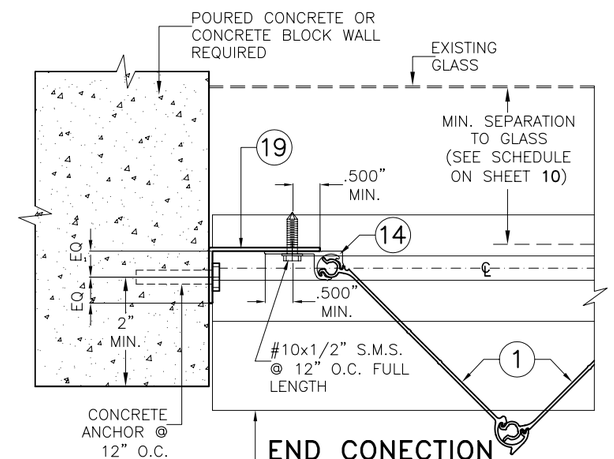

END CONECTION DETAIL 4

SCALE : 3/8" = 1"

TEXAS DEPARTMENT OF INSURANCE (T.D.I.)– 2006

WALTER A. TILLIT Jr. P.E.
PROFESSIONAL ENGINEER
6355 N.W. 36TH. ST., STE. 305
VIRGINIA GARDENS, FL. 33166
PHONE : (305) 871–1530 , FAX : (305) 871–1531
TEXAS LIC. # 90691

MID–PRESSURE AND HI–PRESSURE BLADES ACCORDION SHUTTER SYSTEM

B & C METALS ENTERPRISE
8315 NW 74 STREET
MIAMI, FLORIDA 33166
PHONE:(305) 406–0944 / FAX:(305) 406–0946

REV. NO	DESCRIPTION	DATE	REV. No	DESCRIPTION	DATE
1	–	–	3	–	–
2	–	–	4	–	–

DRAWN BY: I.A.

08/14/09 DATE

09–151 DRAWING No

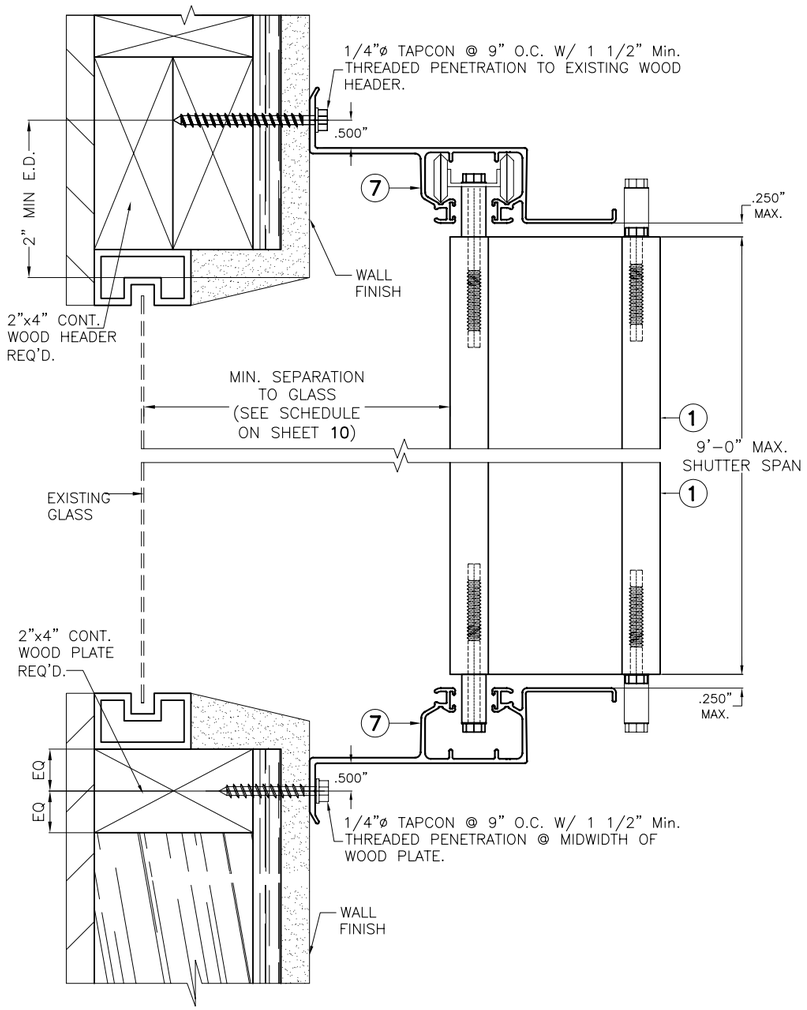

WALL MOUNTING SILL INSTALLATION SECTION AW

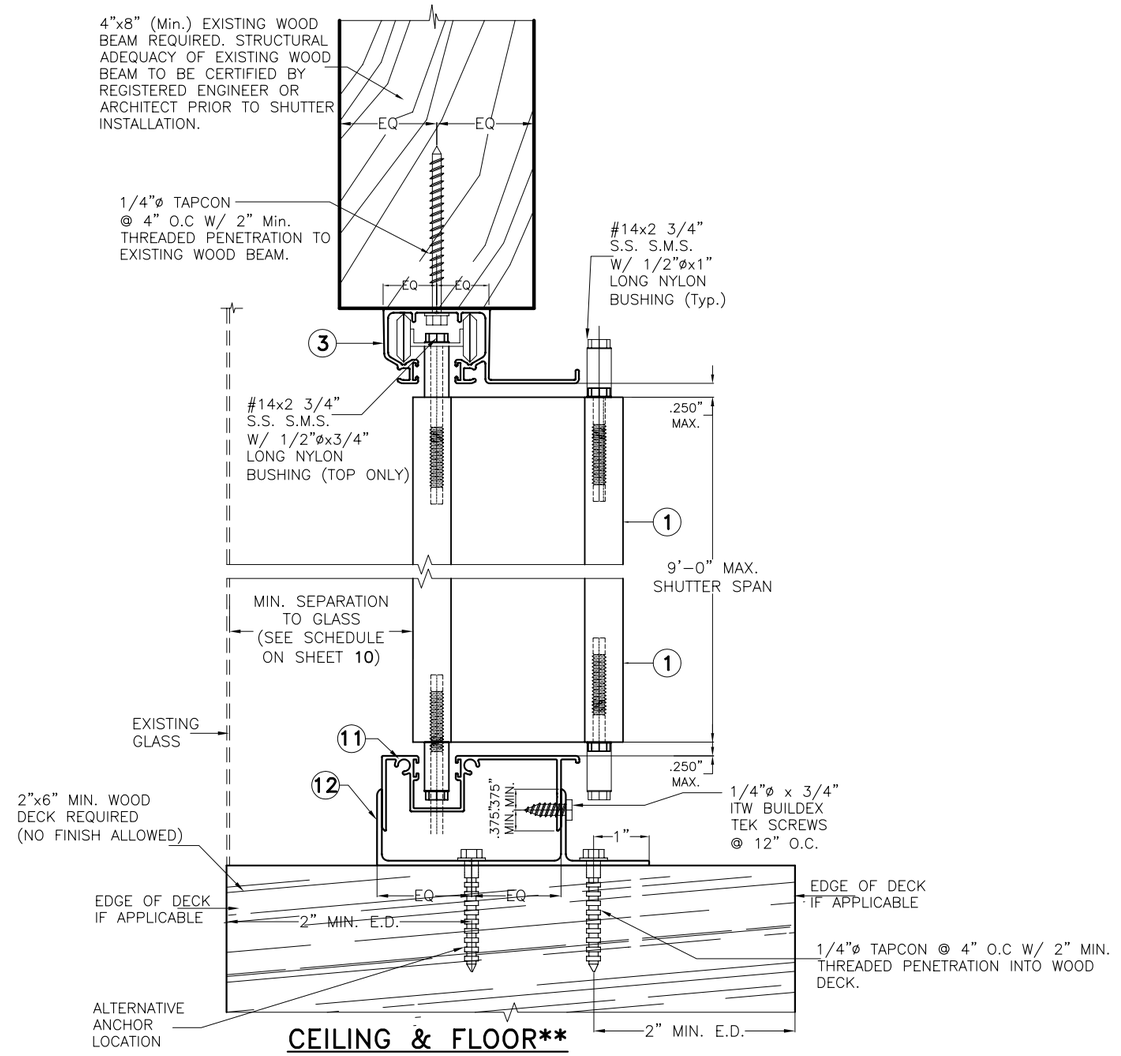

CEILING & FLOOR** MOUNTING INSTALLATION SECTION BW

INSTALLATION DETAILS ON EXISTING WOOD BUILDINGS FOR MID-PRESSURE BLADE.

SCALE : 3/8" = 1"

NOTE FOR COMBINATION OF SECTIONS:

1- MOUNTING SECTIONS CAN BE COMBINED IN ANY WAY TO SUIT ANY INSTALLATION.

NOTES:

1. INSTALLATIONS ARE ONLY VALID FOR BUILDINGS WITH DESIGN LOAD UP TO 80 p.s.f. AND 9'-0" Max. SHUTTER SPAN.
2. FOR NEW WOOD FRAME CONSTRUCTION: WOOD MEMBERS TO BE SOUTHERN PINE No. 2, W/ SPECIFIC DENSITY OF 0.55 OR EQUAL.

TEXAS DEPARTMENT OF INSURANCE (T.D.I.)- 2006

WALTER A. TILLIT Jr. P.E.
PROFESSIONAL ENGINEER
6355 N.W. 36TH. ST., STE. 305
VIRGINIA GARDENS, FL. 33166
PHONE : (305) 871-1530 , FAX : (305) 871-1531
TEXAS LIC. # 90691

MID-PRESSURE AND HI-PRESSURE BLADES ACCORDION SHUTTER SYSTEM

B & C METALS ENTERPRISE
8315 NW 74 STREET
MIAMI, FLORIDA 33166
PHONE:(305) 406-0944 / FAX:(305) 406-0946

REV. NO	DESCRIPTION	DATE	REV. No	DESCRIPTION	DATE
1	-	-	3	-	-
2	-	-	4	-	-

DRAWN BY: I.A.

08/14/09 DATE

09-151 DRAWING No

SHEET 7 OF 15

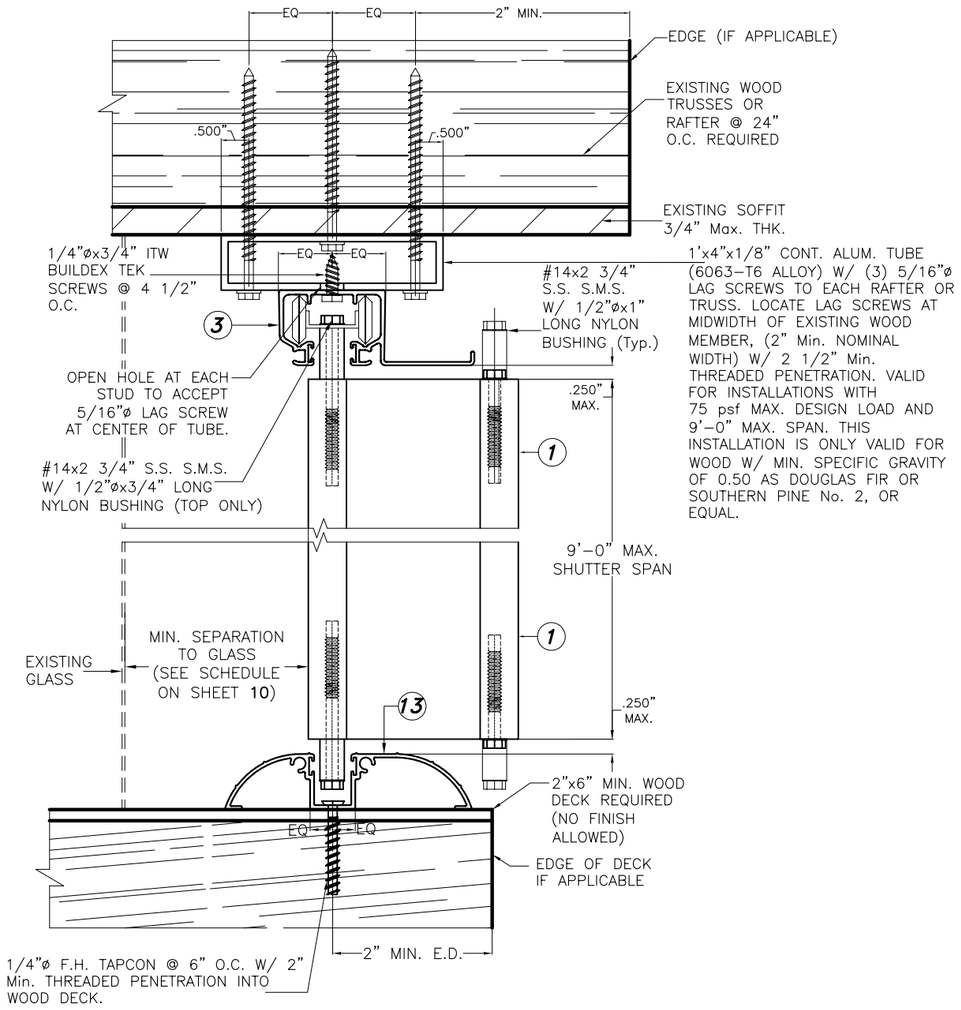

CEILING & FLOOR MOUNTING INSTALLATION SECTION CW

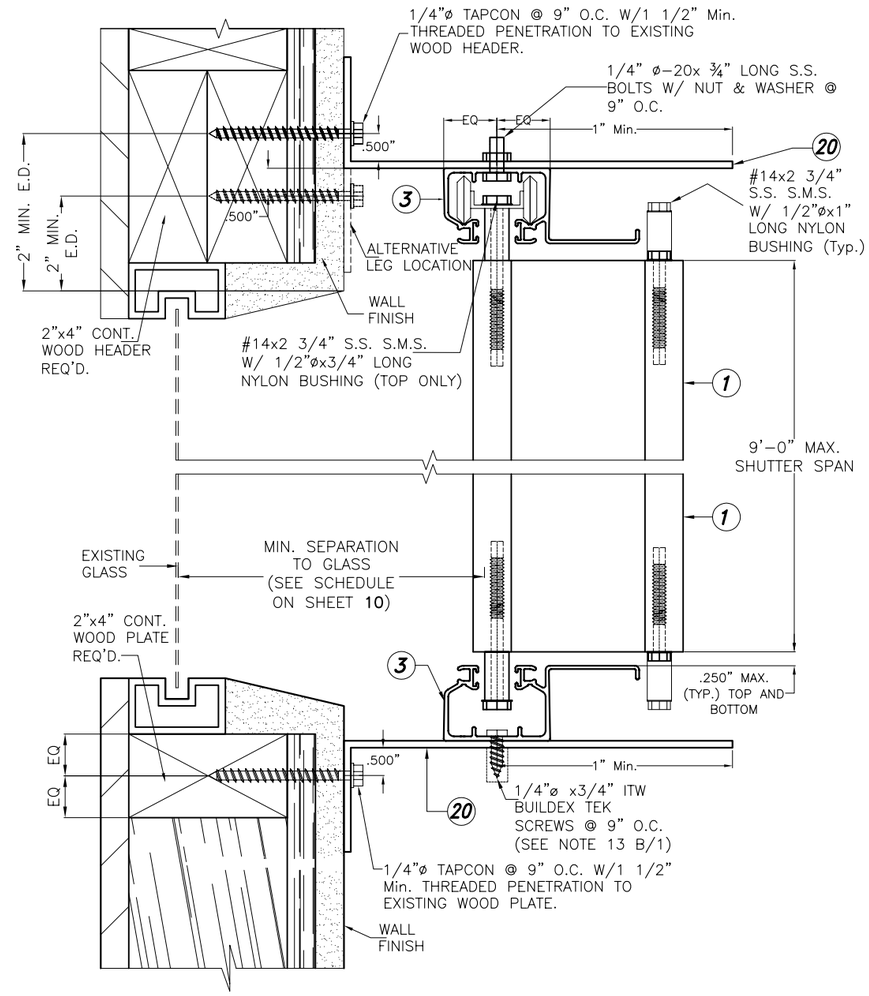

WALL MOUNTING HEADER & SILL INSTALLATION SECTION DW

INSTALLATION DETAILS ON EXISTING WOOD BUILDINGS FOR MID-PRESSURE BLADE.

SCALE : 3/8" = 1"

NOTE FOR COMBINATION OF SECTIONS:

1- MOUNTING SECTIONS CAN BE COMBINED IN ANY WAY TO SUIT ANY INSTALLATION.

NOTES:

1. INSTALLATIONS ARE ONLY VALID FOR BUILDINGS WITH DESIGN LOAD UP TO 80 p.s.f. AND 9'-0" Max. SHUTTER SPAN.
2. FOR NEW WOOD FRAME CONSTRUCTION: WOOD MEMBERS TO BE SOUTHERN PINE No. 2, W/ SPECIFIC DENSITY OF 0.55 OR EQUAL.

TEXAS DEPARTMENT OF INSURANCE (T.D.I.)- 2006

WALTER A. TILLIT Jr. P.E.
PROFESSIONAL ENGINEER
6355 N.W. 36TH. ST., STE. 305
VIRGINIA GARDENS, FL. 33166
PHONE : (305) 871-1530 , FAX : (305) 871-1531
TEXAS LIC. # 90691

MID-PRESSURE AND HI-PRESSURE BLADES ACCORDION SHUTTER SYSTEM

B & C METALS ENTERPRISE
8315 NW 74 STREET
MIAMI, FLORIDA 33166
PHONE:(305) 406-0944 / FAX:(305) 406-0946

REV. NO	DESCRIPTION	DATE	REV. No	DESCRIPTION	DATE
1	-	-	3	-	-
2	-	-	4	-	-

DRAWN BY: I.A.

08/14/09 DATE

09-151 DRAWING No

END INSTALLATION DETAILS FOR MID-PRESSURE BLADE INTO 2"x4" MIN. WOOD STUDS

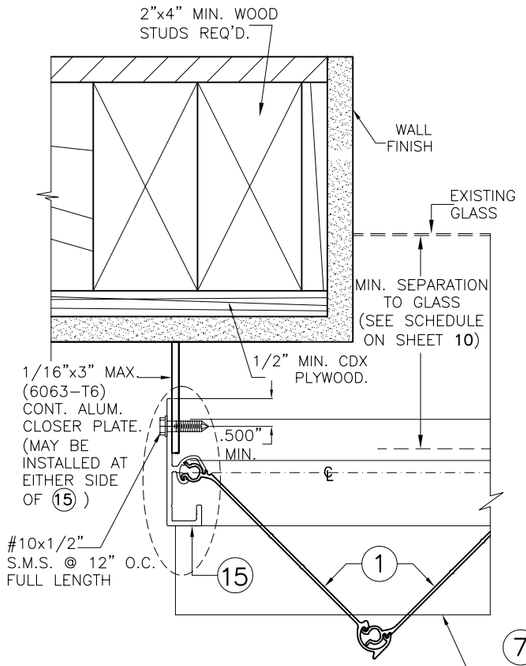

END CONECTION DETAIL 1
SCALE : 3/8" = 1"

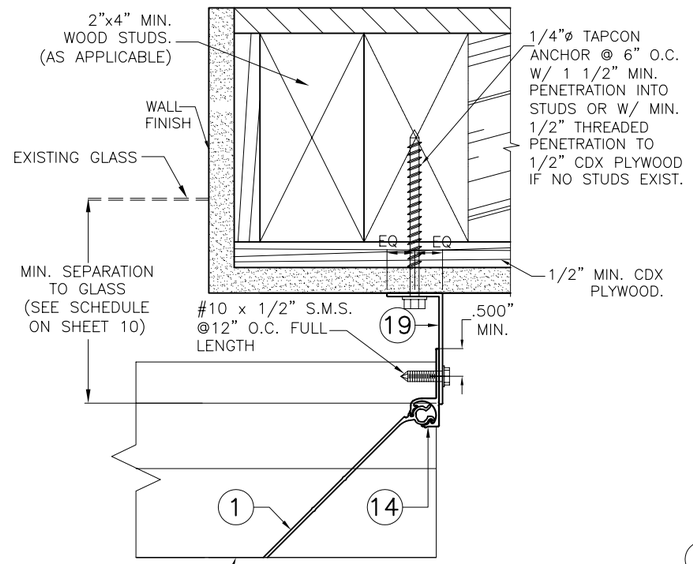

END CONECTION DETAIL 2
SCALE : 3/8" = 1"

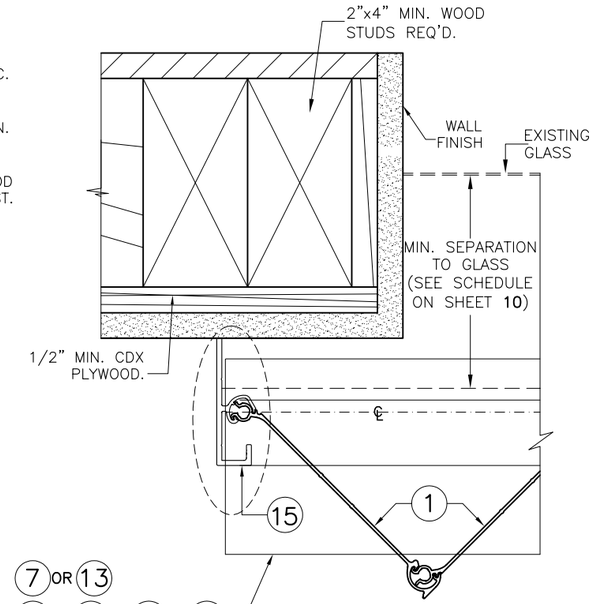

END CONECTION DETAIL 3
SCALE : 3/8" = 1"

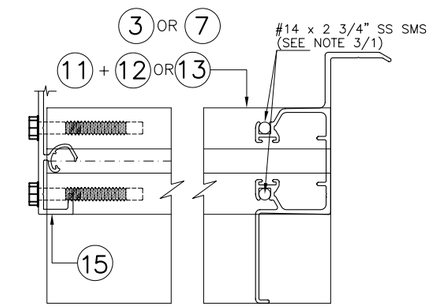

PLAN VIEW Y

DETAIL Z
SCALE : 3/8" = 1"

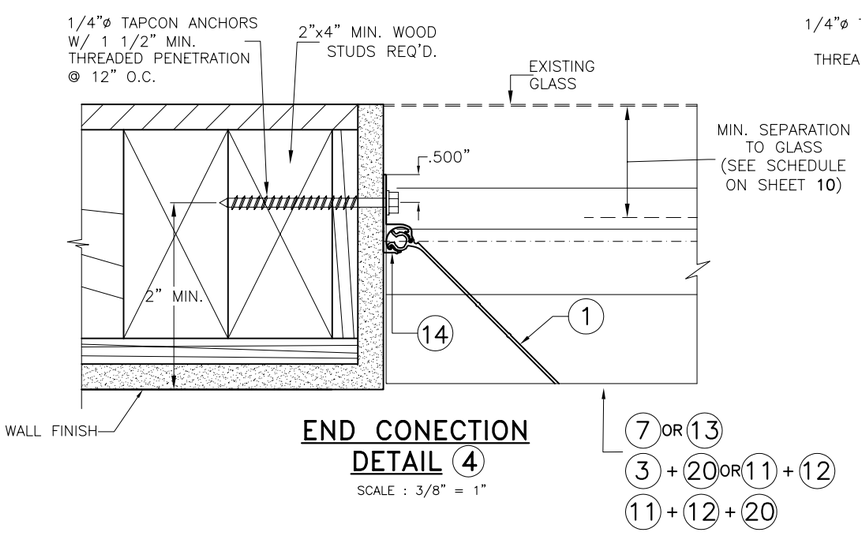

END CONECTION DETAIL 4
SCALE : 3/8" = 1"

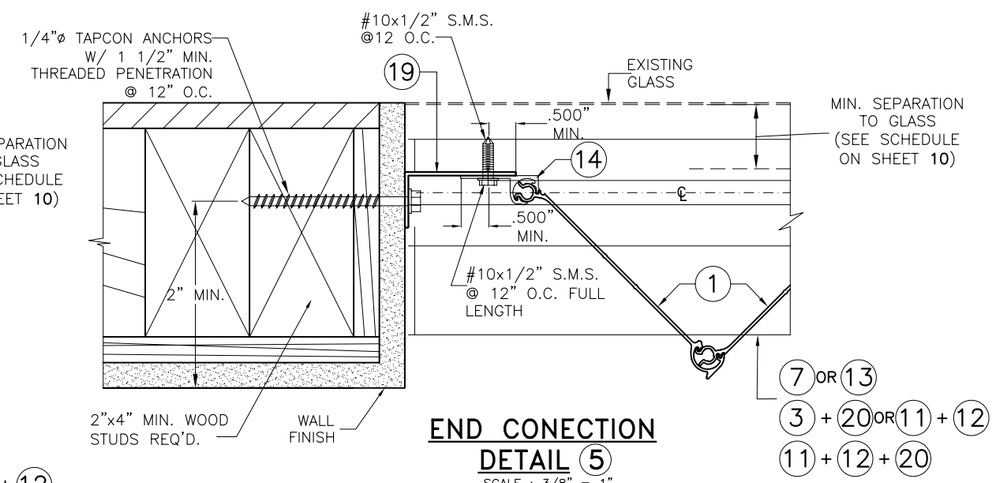

END CONECTION DETAIL 5
SCALE : 3/8" = 1"

TEXAS DEPARTMENT OF INSURANCE (T.D.I.)– 2006

WALTER A. TILLIT Jr. P.E.
PROFESSIONAL ENGINEER
6355 N.W. 36TH. ST., STE. 305
VIRGINIA GARDENS, FL. 33166
PHONE : (305) 871-1530 , FAX : (305) 871-1531
TEXAS LIC. # 90691

MID-PRESSURE AND HI-PRESSURE BLADES ACCORDION SHUTTER SYSTEM

B & C METALS ENTERPRISE
8315 NW 74 STREET
MIAMI, FLORIDA 33166
PHONE:(305) 406-0944 / FAX:(305) 406-0946

REV. NO	DESCRIPTION	DATE	REV. No	DESCRIPTION	DATE
1	–	–	3	–	–
2	–	–	4	–	–

DRAWN BY: I.A.
08/14/09 DATE
09-151 DRAWING No
SHEET 9 OF 15

MAXIMUM DESIGN PRESSURE RATING "W" (p.s.f.) AND CORRESPONDING MAXIMUM SPAN SCHEDULE.

(VALID FOR SECTIONS A, B, C, D & E ON SHEETS 3 & 4).

MAXIMUM DESIGN PRESSURE RATING "W" (p.s.f.) AND CORRESPONDING MAXIMUM SPAN "L" SCHEDULE.

MAXIMUM DESIGN LOAD "W" (p.s.f.)	MAXIMUM SHUTTER SPAN SPAN FOR ALL SECTIONS Ú		MINIMUM SEPARATION TO GLASS (in.) ALL SECTIONS
	Max. PANEL LENGTH L+ (ft.)	Max. PANEL LENGTH L− (ft.)	
40	14'−11"	14'−11"	1"
45	14'−1"	14'−1"	1"
50	13'−4"	13'−4"	1"
55	12'−8"	12'−9"	1"
60	12'−2"	12'−2"	1"
65	11'−8"	11'−8"	1"
70	11'−3"	11'−3"	1"
75	10'−11"	10'−11"	1"
80	10'−5"	10'−7"	1"
85	10'−2"	10'−3"	1"
90	9'−11"	9'−11"	1"
95	9'−8"	9'−8"	1"
100	9'−5"	9'−5"	1"
105	9'−2"	9'−3"	1"
110	9'−0"	9'−0"	1"
115	8'−2"	8'−7"	1"
120	7'−4"	8'−3"	1"
125	6'−3"	7'−11"	1"
130	5'−0"	7'−7"	1"
135	----	7'−4"	1"
140	----	7'−1"	1"
145	----	6−9"	1"
150	----	6'−5"	1"
155	----	6'−0"	1"
160	----	5'−8"	1"
165	----	5'−4"	1"
170	----	5'−0"	1"
175	----	4'−11"	1"
180	----	4'−9"	1"
185	----	4−8"	1"
190	----	4'−6"	1"
195	----	4'−5"	1"

Ú NOTES:

(1) L+: MAXIMUM ALLOWABLE SHUTTER SPAN FOR A GIVEN POSITIVE DESIGN LOAD.
L−: MAX. ALLOWABLE SHUTTER SPAN FOR A GIVEN NEGATIVE DESIGN LOAD.

(2) PROCEDURE TO DETERMINE MAXIMUM SHUTTER SPAN FOR WALL MOUNTINGS OR FLOOR/CEILING:

GIVEN A POSITIVE DESIGN LOAD, DETERMINE MAXIMUM SHUTTER SPAN "L+" FROM SCHEDULE.
GIVEN A NEGATIVE DESIGN LOAD, DETERMINE MAXIMUM SHUTTER SPAN "L−" FROM SCHEDULE.

FINAL MAXIMUM ALLOWABLE SHUTTER SPAN IS EQUAL TO THE MINIMUM DETERMINED SHUTTER SPAN BETWEEN "L+" AND "L−".

MAXIMUM DESIGN PRESSURE RATING "W" (p.s.f.) AND CORRESPONDING MAXIMUM ANCHOR SPACING (in.) SCHEDULE. +

MAX. ANCHOR SPACING VS MAX. SHUTTER SPAN
* APPLICABLE FOR MAX. SHUTTER SPAN 9'−4"
** APPLICABLE FOR MAX. SHUTTER SPAN 7'−9"
*** APPLICABLE FOR MAX. SHUTTER SPAN 7'−6"

MAXIMUM DESIGN LOAD "W" (p.s.f.)	VALID FOR SECTION A						VALID FOR SECTION B			VALID FOR SECTION C			VALID FOR SECTION D						VALID FOR SECTION E					
	WALL MOUNTING INSTALLATION AT TOP OR BOTTOM (TO CONCRETE)			WALL MOUNTING INSTALLATION AT TOP OR BOTTOM (TO MASONRY)			FLOOR/CEILING MOUNTING INSTALLATION TOP OR BOTTOM (TO CONCRETE)			FLOOR/CEILING MOUNTING INSTALLATION TOP OR BOTTOM (TO CONCRETE)			BUILD−OUT MOUNTING INSTALLATION AT TOP OR BOTTOM (TO CONCRETE)			BUILD−OUT MOUNTING INSTALLATION AT TOP OR BOTTOM (TO MASONRY)			BUILD−OUT MOUNTING INSTALLATION AT TOP OR BOTTOM (TO CONCRETE)			BUILD−OUT MOUNTING INSTALLATION AT TOP OR BOTTOM (TO MASONRY)		
	NOTE 1	NOTE 2	NOTE 3	NOTE 1	NOTE 2	NOTE 3	NOTE 1	NOTE 2	NOTE 3	NOTE 1	NOTE 2	NOTE 3	NOTE 1	NOTE 2	NOTE 3	NOTE 1	NOTE 2	NOTE 3	NOTE 1	NOTE 2	NOTE 3	NOTE 1	NOTE 2	NOTE 3
40 OR LESS	9"	9"	9"	9"	9"	7 1/2"	6"	6"	6"	6"	6"	6"	9"	9"	9"	9"	9"	7 1/2"	9"	9"	9"	9"	9"	5 1/2"
	9"	9"	9"	9"	9"	9"	6"	6"	6"	6"	6"	6"	9"	9"	9"	9"	9"	9"	9"	9"	9"	9"	9"	8"
	–	–	–	–	–	–	6"	6"	6"	6"	6"	6"	–	–	–	–	–	–	–	–	–	–	–	–
FROM < 40 TO 62	9"	9"	9"	9"	8"	6"	6"	6"	5 1/2"	6"	6"	6"	9"	9"	9"	9"	8"	5 1/2"	9"	9"	9"	9"	7"	3 1/2"
	9"	9"	9"	9"	9"	8"	6"	6"	6"	6"	6"	6"	9"	9"	9"	9"	9"	7 1/2"	9"	9"	9"	9"	9"	4 1/2"
	–	–	–	–	–	–	6"	6"	5"	6"	6"	6"	–	–	–	–	–	–	–	–	–	–	–	–
FROM > 62 TO 72	9"	9"	9"	9"	7"	4"	6"	6"	5"	6"	6"	6"	9"	9"	9"	9"	7"	4 1/2"	9"	9"	9"	9"	4 1/2"	3"
	9"	9"	9"	9"	9"	5 1/2"	6"	6"	6"	6"	6"	6"	9"	9"	9"	9"	9"	6 1/2"	9"	9"	9"	9"	6 1/2"	4"
	–	–	–	–	–	–	6"	6"	4 1/2"	6"	6"	6"	–	–	–	–	–	–	–	–	–	–	–	–
FROM > 72 TO 92	9"	9"	7 1/2"	9"	3 1/2"	3"*	6"	5"	4 1/2"	6"	6"	5 1/2"	9"	9"	9"	9"	4 1/2"	3 1/2"	9"	9"	7 1/2"	9"	3"	–
	9"	9"	9"	9"	4 1/2"	4"*	6"	6"	6"	6"	6"	6"	9"	9"	9"	9"	6"	5"	9"	9"	9"	9"	4"	3 3/4"*
	–	–	–	–	–	–	6"	6"	4"	6"	6"	6"	–	–	–	–	–	–	–	–	–	–	–	–
FROM > 92 TO 110	9"	5"	4"	8 1/2"	3"**	–	6"	4"	4"	6"	5"	4 1/2"	9"	9"	8 1/2"	8 1/2"	3"	3"*	9"	6 1/2"	6"	7"	3"***	–
	9"	7"	5 1/2"	9"	4"**	–	6"	6"	6"	6"	6"	6"	9"	9"	9"	9"	4"	3 3/4"	9"	9"	8"	9"	3 3/4"**	–
	–	–	–	–	–	–	6"	4"	3 1/2	6"	6"	6"	–	–	–	–	–	–	–	–	–	–	–	–
FROM > 110 TO 170	9"	5"	–	3"	3"**	–	5"	4"	–	6"	4 1/2"	–	9"	8 1/2"	–	4"	3"	–	8 1/2"	6"	–	–	–	–
	9"	7"	–	4"	4"**	–	6"	6"	–	6"	6"	–	9"	9"	–	5 1/2"	3 3/4"	–	9"	8"	–	3 3/4"	3 3/4"**	–
	–	–	–	–	–	–	4 1/2"	3 1/2"	–	6"	6"	–	–	–	–	–	–	–	–	–	–	–	–	–
FROM > 170 TO 195	8"	–	–	3"	–	–	4 1/2"	–	–	5 1/2"	–	–	9"	–	–	4"	–	–	8"	–	–	–	–	–
	9"	–	–	4"	–	–	6"	–	–	6"	–	–	9"	–	–	5 1/2"	–	–	9"	–	–	3 3/4"	–	–
	–	–	–	–	–	–	4"	–	–	6"	–	–	–	–	–	–	–	–	–	–	–	–	–	–

\+ MAXIMUM ANCHOR SPACINGS LISTED BELOW ARE AS PER MIN. EDGE DISTANCE SCHEDULE. FOR E.D. LESS THAN THAN SCHEDULE INDICATED, REDUCE ANCHOR SPACING BY MULTIPLYING SPACING SHOWN ON SCHEDULE BY THE FOLLOWING FACTORS. FOR THIS OPERATION TO BE POSSIBLE, REDUCED SPACING OBTAINED USING FACTOR SHALL NOT BE LESS THAN MINIMUM SPACING INDICATED FOR EACH ANCHOR TYPE AT ANCHORS LEGEND.

ACTUAL E.D.	FACTOR		
	1/4"ø TAPCON	5/16"ø TAPCON XL	1/4"ø CALK−IN
	MIN. SPACING=3"	MIN. SPACING=3.75"	MIN. SPACING=2.50"
1.50"	.35	.35	–
2.00"	–	.50	–
2.50"	–	.89	.50
2.688"	–	.96	–
3.00"	1.00	.96	.63
3.625"	–	1.00	–

ANCHORS LEGEND

ANCHORS TYPE	MINIMUM ANCHOR SPACING	MINIMUM EDGE DISTANCE	
		CONCRETE	C. BLOCK
1/4"ø TAPCON 3192 psi. (MIN.) CONCRETE	3.00"	3.00"	3.00"
5/16"ø TAPCON XL 2899 psi. (MIN.) CONCRETE	3.75"	3.125"	4.00"
1/4"ø CALK−IN 3000 psi. (MIN.) CONCRETE	2.50"	3.50"	–

1/4"ø TAPCON
5/16"ø TAPCON XL
1/4"ø CALK−IN

ANCHOR SPACING LEGEND

(1) Max. ANCHOR SPCG. VALID FOR SPANS OF 5'−0" OR LESS.
(2) Max. ANCHOR SPCG. VALID FOR SPANS GREATER THAN 5'−0" TO 9'−0".
(3) Max. ANCHOR SPCG. VALID FOR SPANS GREATER THAN 9'−0" TO MAX. ALLOWED.

① MID−PRESSURE BLADE

TEXAS DEPARTMENT OF INSURANCE (T.D.I.)− 2006

WALTER A. TILLIT Jr. P.E.
PROFESSIONAL ENGINEER

6355 N.W. 36TH. ST., STE. 305
VIRGINIA GARDENS, FL. 33166
PHONE : (305) 871−1530 , FAX : (305) 871−1531

TEXAS LIC. # 90691

MID−PRESSURE AND HI−PRESSURE BLADES ACCORDION SHUTTER SYSTEM

B & C METALS ENTERPRISE
8315 NW 74 STREET
MIAMI, FLORIDA 33166
PHONE:(305) 406−0944 / FAX:(305) 406−0946

REV. NO	DESCRIPTION	DATE	REV. No	DESCRIPTION	DATE
1	–	–	3	–	–
2	–	–	4	–	–

DRAWN BY: I.A.
08/14/09 DATE
09−151 DRAWING No
SHEET 10 OF 15

◆ NOTES ON LOCK (23) & LOCKING RODS (16)

1. ON LOCK (23) SHALL ALWAYS BE USED AT SHUTTER'S MIDSPAN AT ALL INSTALLATIONS. LOCK MAY BE INSTALLED INSIDE/OUTSIDE ATTACHED TO (9) W/ (3) #8 x 3/8" FLAT HEAD S.S. M.S., AND INCLUDES REINFORCEMENT INSERT (10) (SEE SHEETS 13 & 14). LOCATION OF LOCK SHALL BE AS SHOWN ON TYPICAL SHUTTER ELEVATION.

2. (2) LOCKING RODS (16) SHALL ALWAYS BE USED TOP & BOTTOM AT SHUTTER'S CENTERMATES (9) + (10) AT ALL INSTALLATIONS. LOCKING RODS (16) SHALL BE SECURED W/ 1/4"–20 THUMBSCREW (18).

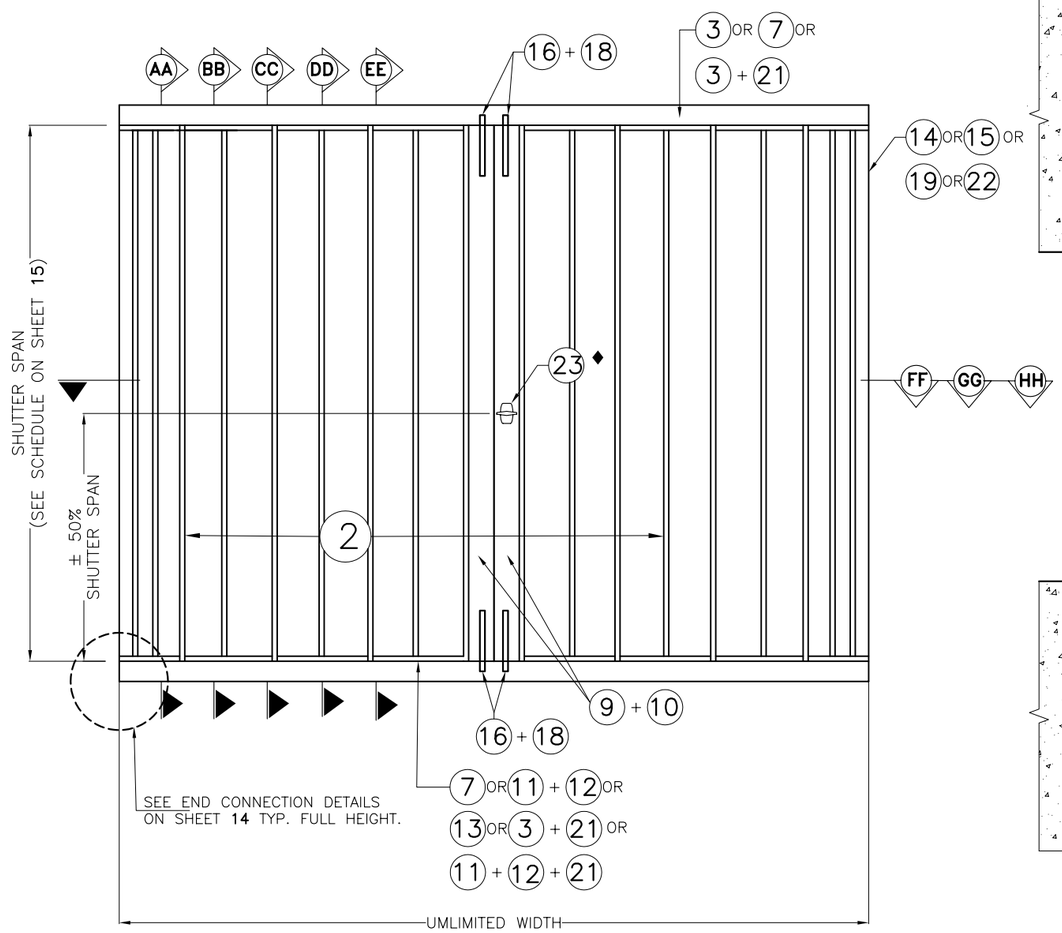

TYPICAL ELEVATION FOR HI–PRESSURE BLADE ♣

N. T. S.

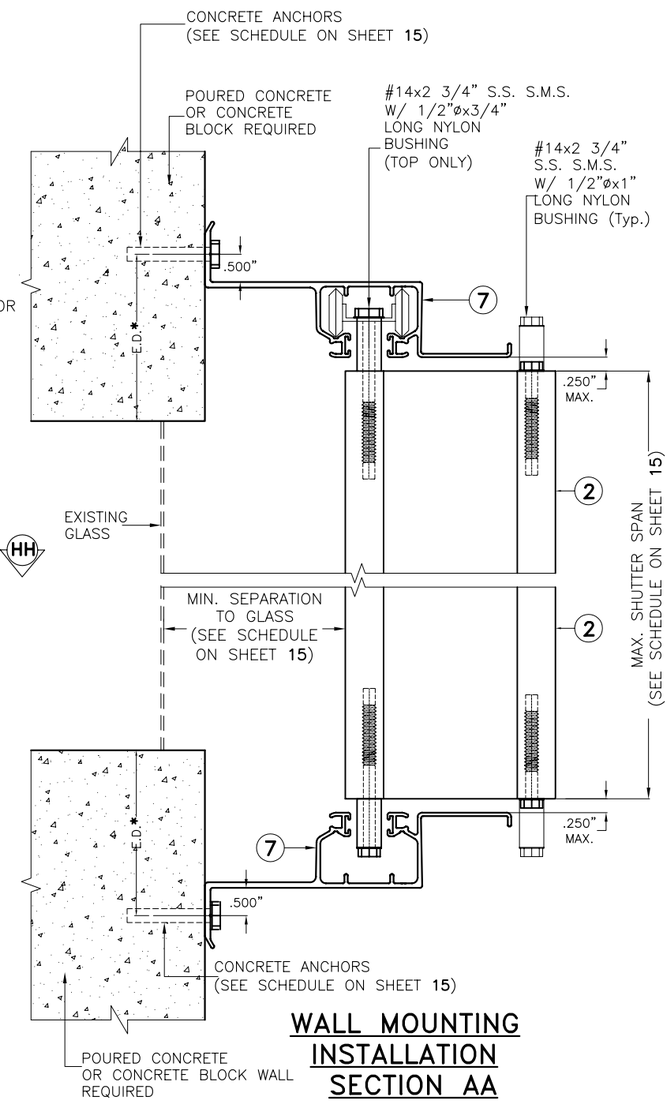

WALL MOUNTING INSTALLATION SECTION AA

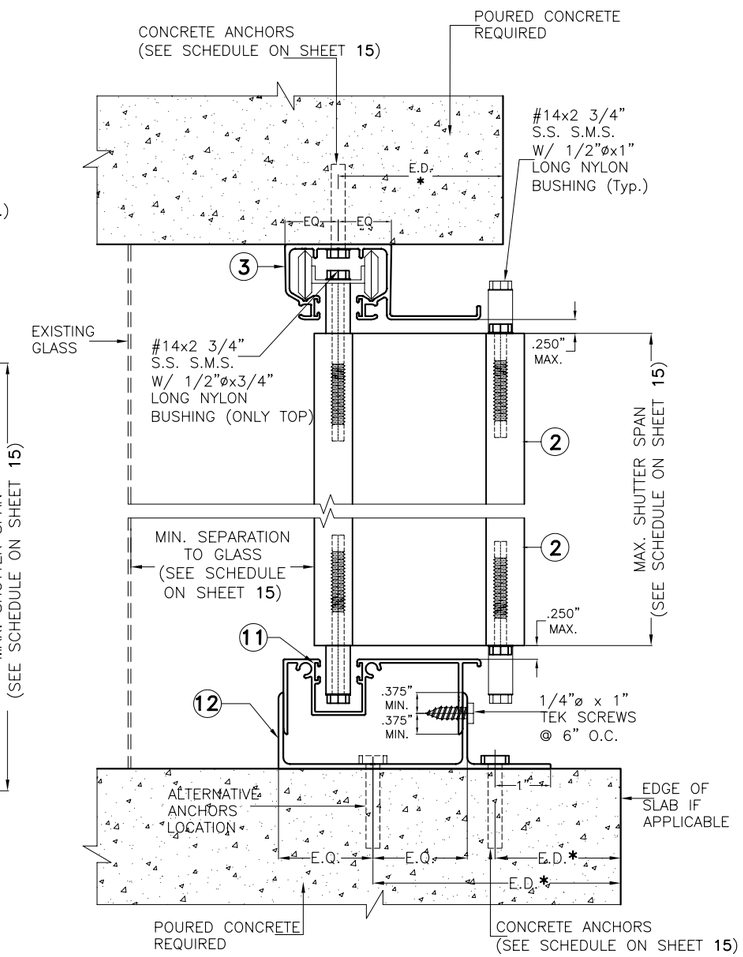

CEILING & FLOOR** MOUNTING INSTALLATION SECTION BB

INSTALLATIONS DETAILS FOR HI–PRESSURE BLADE

SCALE : 3/8" = 1"

♣ NOTE:
SEE SECTIONS **AA** THRU **DD** ON SHEETS **11** & **12**.

NOTE FOR COMBINATION OF SECTIONS:

1– MOUNTING SECTIONS CAN BE COMBINED IN ANY WAY TO SUIT ANY INSTALLATION.

* E.D. = EDGE DISTANCE (SEE SPECIFICATIONS ON SHEET 15)

** NOTE:

THIS INSTALLATION SHALL BE REMOVABLE WHEN PERFORMED ADJACENT TO AN OPERABLE EXIT OR ENTRANCE

TEXAS DEPARTMENT OF INSURANCE (T.D.I.)– 2006

WALTER A. TILLIT Jr. P.E.
PROFESSIONAL ENGINEER
6355 N.W. 36TH. ST., STE. 305
VIRGINIA GARDENS, FL. 33166
PHONE : (305) 871–1530 , FAX : (305) 871–1531
TEXAS LIC. # 90691

MID–PRESSURE AND HI–PRESSURE BLADES ACCORDION SHUTTER SYSTEM

B & C METALS ENTERPRISE
8315 NW 74 STREET
MIAMI, FLORIDA 33166
PHONE:(305) 406–0944 / FAX:(305) 406–0946

REV. NO	DESCRIPTION	DATE	REV. No	DESCRIPTION	DATE
1	–	–	3	–	–
2	–	–	4	–	–

DRAWN BY: I.A.
08/14/09 DATE
09–151 DRAWING No
SHEET 11 OF 15

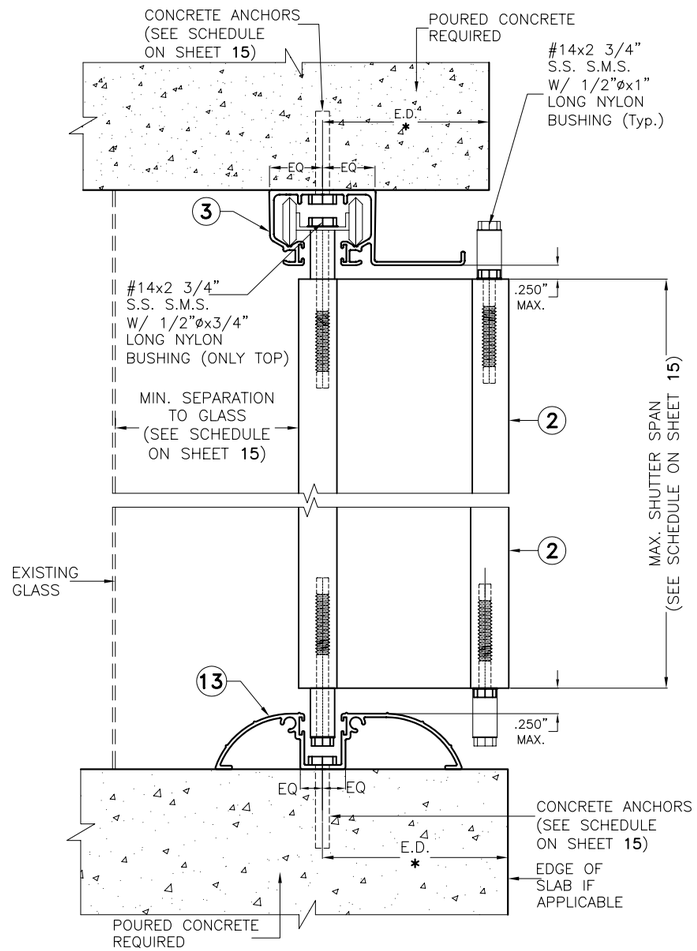

CEILING & FLOOR MOUNTING INSTALLATION SECTION CC

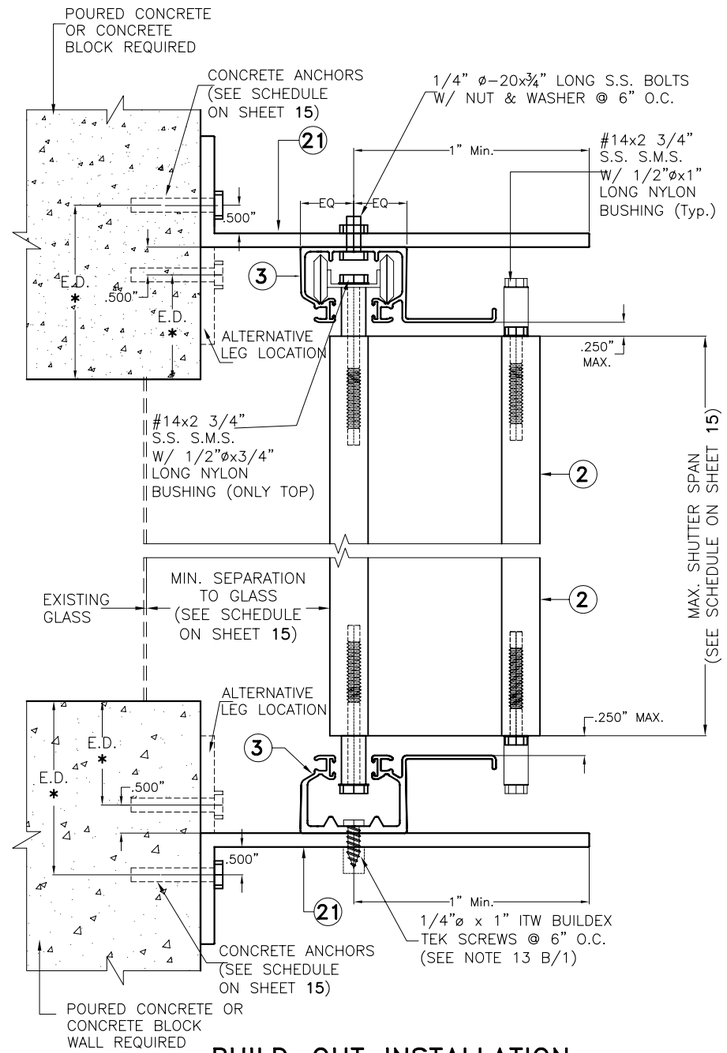

BUILD-OUT INSTALLATION HEADER & SILL SECTION DD

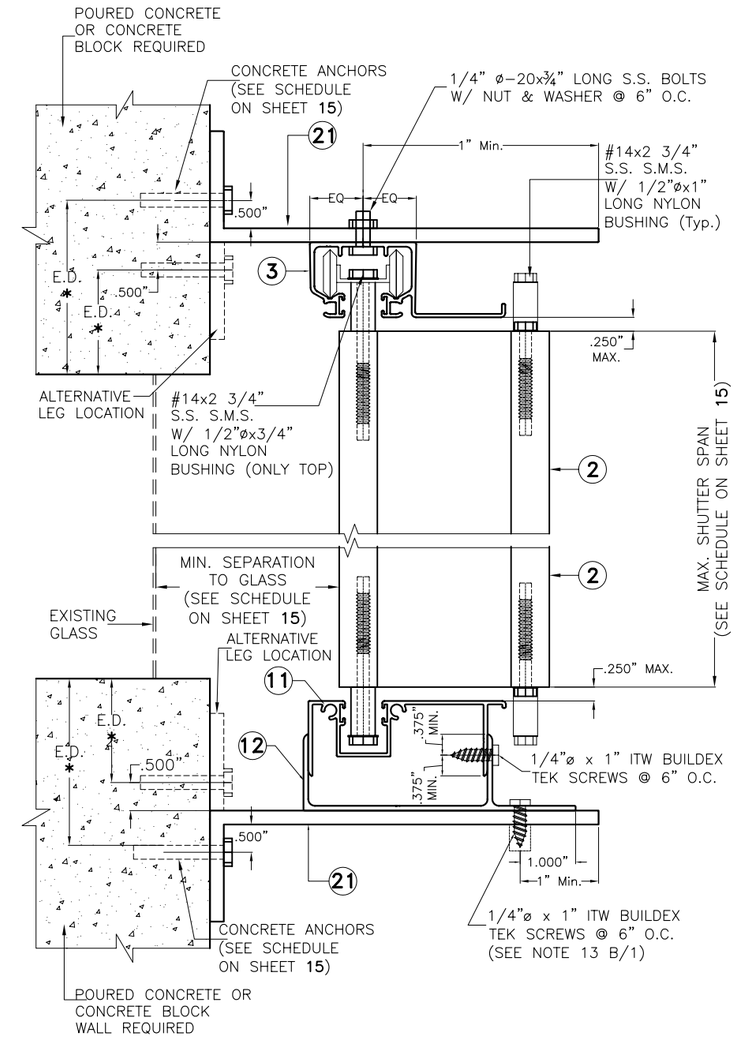

BUILD-OUT INSTALLATION HEADER & SILL SECTION EE

INSTALLATIONS DETAILS FOR HI-PRESSURE BLADE

SCALE : 3/8" = 1"

NOTE FOR COMBINATION OF SECTIONS:

1- MOUNTING SECTIONS CAN BE COMBINED IN ANY WAY TO SUIT ANY INSTALLATION.

* E.D. = EDGE DISTANCE (SEE SPECIFICATIONS ON SHEET 15)

TEXAS DEPARTMENT OF INSURANCE (T.D.I.)- 2006

WALTER A. TILLIT Jr. P.E.
PROFESSIONAL ENGINEER

6355 N.W. 36TH. ST., STE. 305
VIRGINIA GARDENS, FL. 33166
PHONE : (305) 871-1530 , FAX : (305) 871-1531

TEXAS LIC. # 90691

MID-PRESSURE AND HI-PRESSURE BLADES ACCORDION SHUTTER SYSTEM

B & C METALS ENTERPRISE
8315 NW 74 STREET
MIAMI, FLORIDA 33166
PHONE:(305) 406-0944 / FAX:(305) 406-0946

REV. NO	DESCRIPTION	DATE	REV. No	DESCRIPTION	DATE
1	-	-	3	-	-
2	-	-	4	-	-

DRAWN BY: I.A.

08/14/09 DATE

09-151 DRAWING No

SHEET 12 OF 15

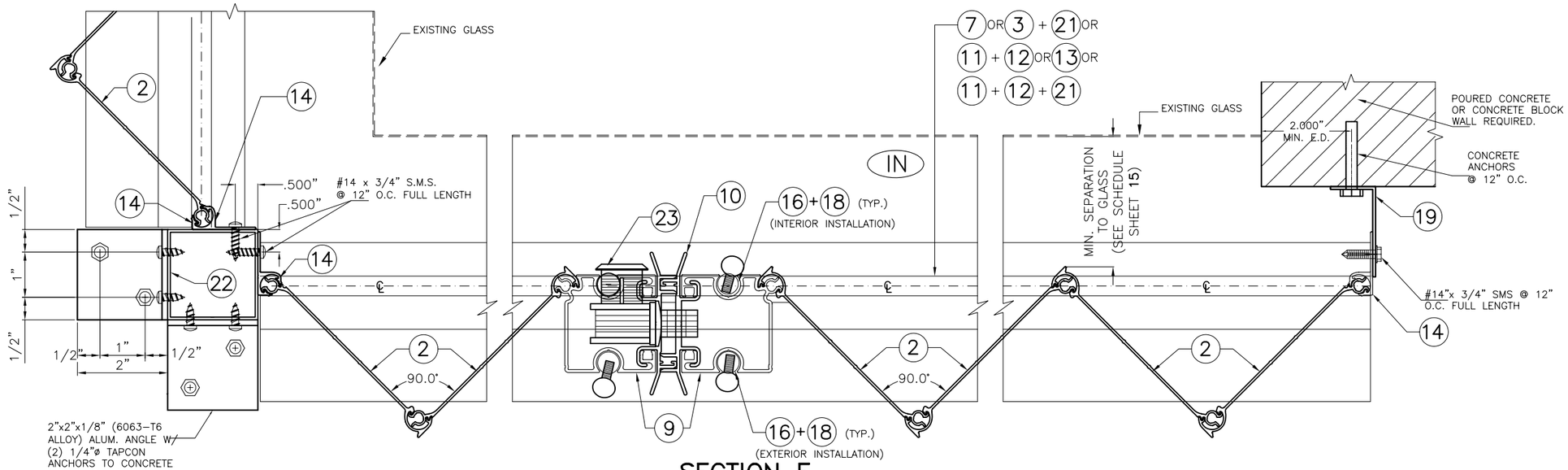

SECTION F

END INSTALLATION DETAILS FOR HI-PRESSURE BLADE

SCALE : 3/8" = 1"

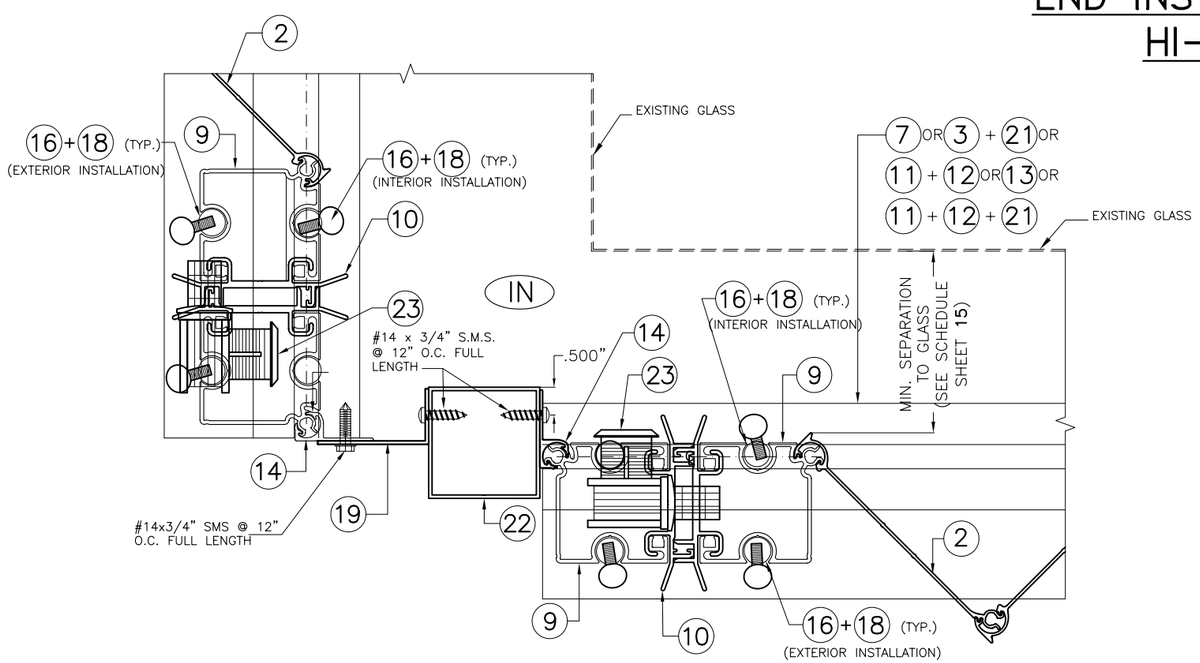

SECTION G

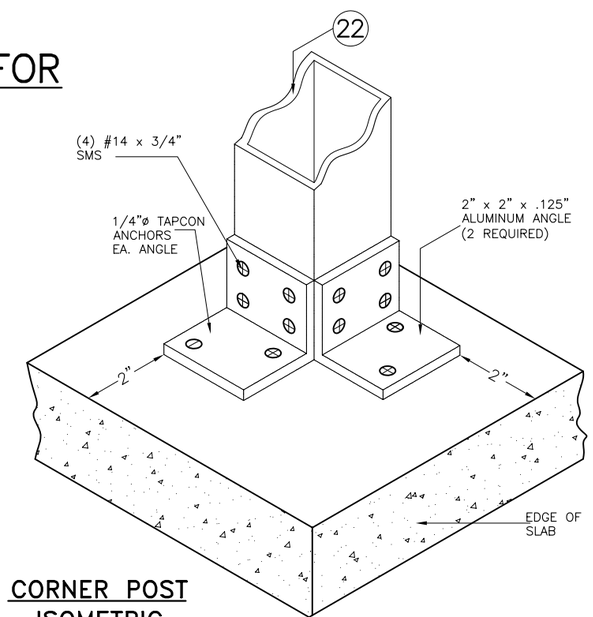

CORNER POST ISOMETRIC

(TYP. AT TOP AND BOTTOM SLABS)
N.T.S.

TEXAS DEPARTMENT OF INSURANCE (T.D.I.)– 2006

WALTER A. TILLIT Jr. P.E.
PROFESSIONAL ENGINEER

6355 N.W. 36TH. ST., STE. 305
VIRGINIA GARDENS, FL. 33166
PHONE : (305) 871-1530 , FAX : (305) 871-1531

TEXAS LIC. # 90691

MID-PRESSURE AND HI-PRESSURE BLADES ACCORDION SHUTTER SYSTEM

B & C METALS ENTERPRISE
8315 NW 74 STREET
MIAMI, FLORIDA 33166
PHONE:(305) 406-0944 / FAX:(305) 406-0946

REV. NO	DESCRIPTION	DATE	REV. No	DESCRIPTION	DATE
1	–	–	3	–	–
2	–	–	4	–	–

DRAWN BY: I.A.

08/14/09 DATE

09-151 DRAWING No

SHEET 13 OF 15

INSTALLATION FOR HI-PRESSURE BLADE INTO CONCRETE OR CONCRETE BLOCK WALL

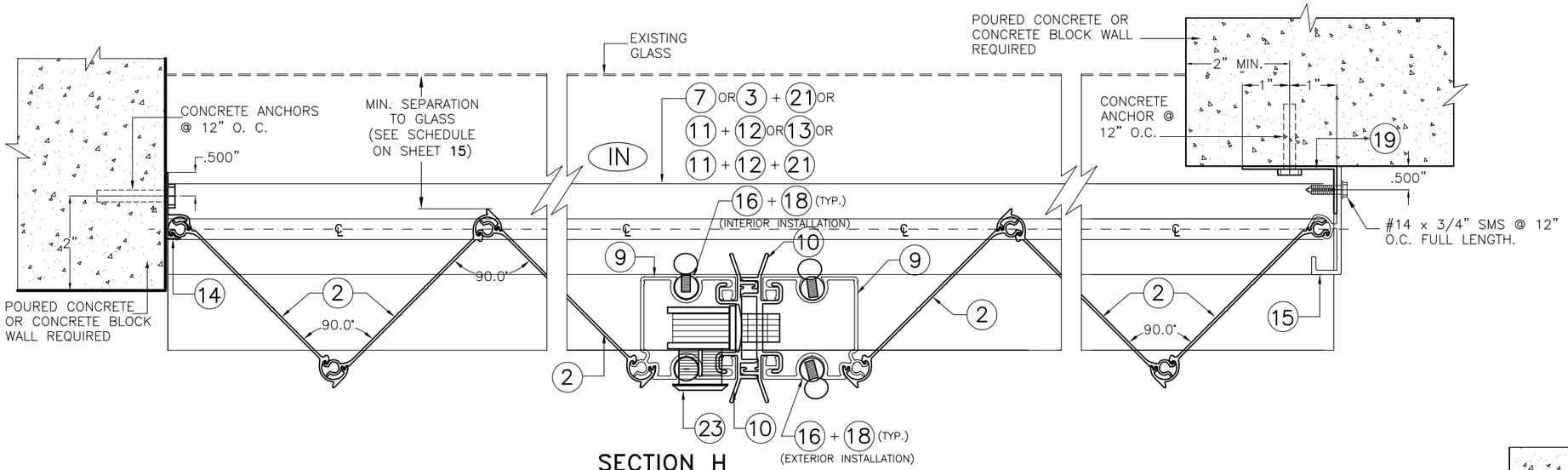

SECTION H

SCALE : 3/8" = 1"

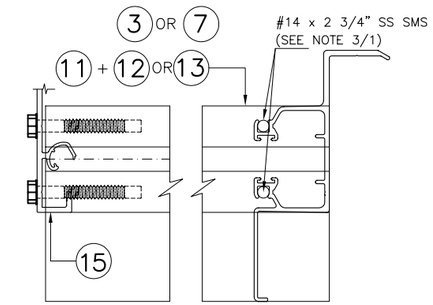

PLAN VIEW Y DETAIL Z

SCALE : 3/8" = 1"

END INSTALLATION DETAILS FOR HI-PRESSURE BLADE

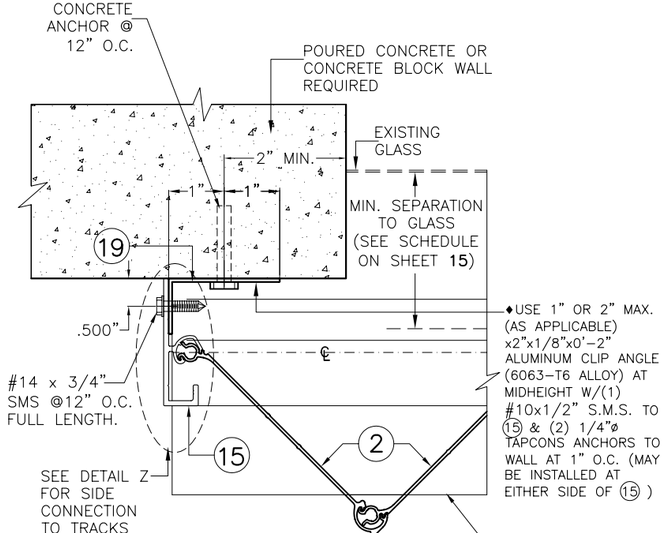

END CONECTION DETAIL 1

SCALE : 3/8" = 1"

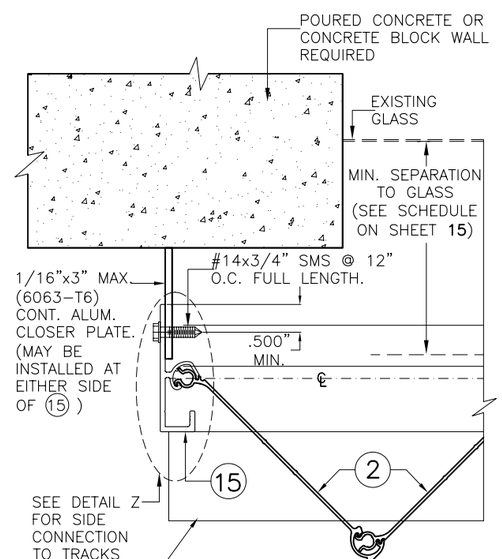

END CONECTION DETAIL 2

SCALE : 3/8" = 1"

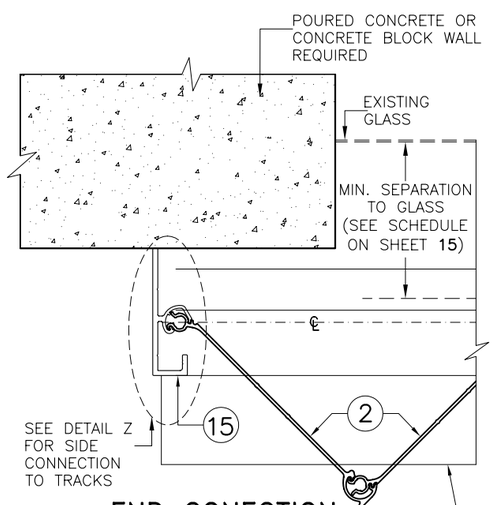

END CONECTION DETAIL 3

SCALE : 3/8" = 1"

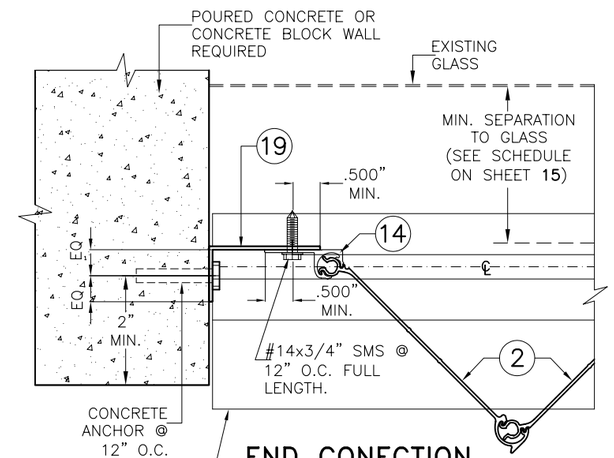

END CONECTION DETAIL 4

SCALE : 3/8" = 1"

7 OR 3 + 21 OR
11 + 12 OR 13 OR
11 + 12 + 21

TEXAS DEPARTMENT OF INSURANCE (T.D.I.)– 2006

WALTER A. TILLIT Jr. P.E.
PROFESSIONAL ENGINEER
6355 N.W. 36TH. ST., STE. 305
VIRGINIA GARDENS, FL. 33166
PHONE : (305) 871-1530 , FAX : (305) 871-1531
TEXAS LIC. # 90691

MID-PRESSURE AND HI-PRESSURE BLADES ACCORDION SHUTTER SYSTEM

B & C METALS ENTERPRISE
8315 NW 74 STREET
MIAMI, FLORIDA 33166
PHONE:(305) 406-0944 / FAX:(305) 406-0946

REV. NO	DESCRIPTION	DATE	REV. No	DESCRIPTION	DATE
1	–	–	3	–	–
2	–	–	4	–	–

DRAWN BY: I.A.
08/14/09 DATE
09-151 DRAWING No
SHEET 14 OF 15

MAXIMUM DESIGN PRESSURE RATING "W" (p.s.f.) AND CORRESPONDING MAXIMUM SPAN SCHEDULE.

(VALID FOR SECTIONS AA, BB, CC, DD & EE ON SHEETS 11 & 12).

MAX. ANCHOR SPACING VS MAX. SHUTTER SPAN
* APPLICABLE FOR MAX. SHUTTER SPAN 8'–0"
** APPLICABLE FOR MAX. SHUTTER SPAN 5'–3"
*** APPLICABLE FOR MAX. SHUTTER SPAN 9'–9"
**** APPLICABLE FOR MAX. SHUTTER SPAN 12'–7"
*****APPLICABLE FOR MAX. SHUTTER SPAN 10'–2"

MAXIMUM DESIGN PRESSURE RATING "W" (p.s.f.) AND CORRESPONDING MAXIMUM SPAN "L" SCHEDULE.

MAXIMUM DESIGN LOAD "W" (p.s.f.)	MAXIMUM SHUTTER SPAN SPAN FOR ALL SECTIONS Ú		MINIMUM SEPARATION TO GLASS (in.) ALL SECTIONS
	Max. PANEL LENGTH L+ (ft.)	Max. PANEL LENGTH L– (ft.)	
40	16'–0"	16'–0"	1"
45	15'–3"	15'–10"	1"
50	14'–6"	15'–4"	1"
55	13'–10"	14'–10"	1"
60	13'–2"	14'–5"	1"
65	12'–8"	14'–0"	1"
70	12'–3"	13'–7"	1"
75	11'–10"	13'–2"	1"
80	11'–5"	12'–6"	1"
85	11'–1"	12'–4"	1"
90	10'–9"	12'–0"	1"
95	10'–6"	11'–8"	1"
100	10'–3"	11'–5"	1"
105	10'–0"	11'–1"	1"
110	9'–9"	10'–10"	1"
115	9'–6"	10'–7"	1"
120	9'–4"	10'–5"	1"
125	9'–2"	10'–2"	1"
130	9'–0"	10'–0"	1"
135	----	9'–10"	1"
140	----	9'–7"	1"
145	----	9'–5"	1"
150	----	9'–3"	1"
155	----	9'–2"	1"
160	----	9'–0"	1"
165	----	8'–0"	1"
170	----	7'–0"	1"
175	----	6'–0"	1"
180	----	5'–0"	1"
185	----	4'–10"	1"
190	----	4'–9"	1"
195	----	4'–7"	1"

Ú NOTES:

(1) L+: MAXIMUM ALLOWABLE SHUTTER SPAN FOR A GIVEN POSITIVE DESIGN LOAD.
L–: MAX. ALLOWABLE SHUTTER SPAN FOR A GIVEN NEGATIVE DESIGN LOAD.

(2) PROCEDURE TO DETERMINE MAXIMUM SHUTTER SPAN FOR WALL MOUNTINGS OR FLOOR/CEILING:

GIVEN A POSITIVE DESIGN LOAD, DETERMINE MAXIMUM SHUTTER SPAN "L+" FROM SCHEDULE.
GIVEN A NEGATIVE DESIGN LOAD, DETERMINE MAXIMUM SHUTTER SPAN "L–" FROM SCHEDULE.

FINAL MAXIMUM ALLOWABLE SHUTTER SPAN IS EQUAL TO THE MINIMUM DETERMINED SHUTTER SPAN BETWEEN "L+" AND "L–".

MAXIMUM DESIGN PRESSURE RATING "W" (p.s.f.) AND CORRESPONDING MAXIMUM ANCHOR SPACING (in.) SCHEDULE. +

MAXIMUM DESIGN LOAD "W" (p.s.f.)	VALID FOR SECTION AA						VALID FOR SECTION BB			VALID FOR SECTION CC			VALID FOR SECTION DD						VALID FOR SECTION EE					
	WALL MOUNTING INSTALLATION AT TOP OR BOTTOM (TO CONCRETE)			WALL MOUNTING INSTALLATION AT TOP OR BOTTOM (TO MASONRY)			FLOOR/CEILING MOUNTING INSTALLATION TOP OR BOTTOM (TO CONCRETE)			FLOOR/CEILING MOUNTING INSTALLATION TOP OR BOTTOM (TO CONCRETE)			BUILD–OUT MOUNTING INSTALLATION AT TOP OR BOTTOM (TO CONCRETE)			BUILD–OUT MOUNTING INSTALLATION AT TOP OR BOTTOM (TO MASONRY)			BUILD–OUT MOUNTING INSTALLATION AT TOP OR BOTTOM (TO CONCRETE)			BUILD–OUT MOUNTING INSTALLATION AT TOP OR BOTTOM (TO MASONRY)		
	NOTE 1	NOTE 2	NOTE 3	NOTE 1	NOTE 2	NOTE 3	NOTE 1	NOTE 2	NOTE 3	NOTE 1	NOTE 2	NOTE 3	NOTE 1	NOTE 2	NOTE 3	NOTE 1	NOTE 2	NOTE 3	NOTE 1	NOTE 2	NOTE 3	NOTE 1	NOTE 2	NOTE 3
40 OR LESS	6"	6"	6"	6"	6"	6"	6"	6"	6"	6"	6"	6"	6"	6"	6"	6"	6"	6"	6"	6"	6"	6"	6"	6"
	6"	6"	6"	6"	6"	6"	6"	6"	6"	6"	6"	6"	6"	6"	6"	6"	6"	6"	6"	6"	6"	6"	6"	6"
	–	–	–	–	–	–	6"	6"	6"	6"	6"	6"	–	–	–	–	–	–	–	–	–	–	–	–
FROM < 40 TO 62	6"	6"	6"	6"	6"	3"	6"	6"	4 1/2"	6"	6"	5 1/2"	6"	6"	6"	6"	6"	5"	6"	6"	6"	6"	6"	5"
	6"	6"	6"	6"	6"	4"	6"	6"	6"	6"	6"	6"	6"	6"	6"	6"	6"	6"	6"	6"	6"	6"	6"	5"
	–	–	–	–	–	–	6"	6"	4"	6"	6"	6"	–	–	–	–	–	–	–	–	–	–	–	–
FROM > 62 TO 72	6"	6"	5"	6"	6"	3"****	6"	6"	4"	6"	6"	5"	6"	6"	6"	6"	6"	4 1/2"	6"	6"	6"	6"	6"	4 1/2"
	6"	6"	6"	6"	6"	4"****	6"	6"	6"	6"	6"	6"	6"	6"	6"	6"	6"	6"	6"	6"	6"	6"	6"	6"
	–	–	–	–	–	–	6"	6"	4"	6"	6"	6"	–	–	–	–	–	–	–	–	–	–	–	–
FROM > 72 TO 92	6"	6"	4"	6"	5"	3"***	6"	5"	3 1/2"	6"	6"	4 1/2"	6"	6"	6"	6"	5 1/2"	4"	6"	6"	6"	6"	5 1/2"	4"
	6"	6"	5"	6"	6"	4"***	6"	6"	6"	6"	6"	6"	6"	6"	6"	6"	6"	5 1/2"	6"	6"	6"	6"	6"	5 1/2"
	–	–	–	–	–	–	6"	4 1/2"	3 1/2"	6"	6"	6"	–	–	–	–	–	–	–	–	–	–	–	–
FROM > 92 TO 110	6"	5"	3 1/2"	6"	3 1/2"*	–	6"	4"	3 1/2"	6"	5"	4"	6"	6"	6"	6"	4 1/2"	3 1/2"	6"	6"	6"	6"	4 1/2"	3 1/2"
	6"	6"	4"	6"	4 1/2"*	–	6"	6"	5 1/2"	6"	6"	6"	6"	6"	6"	6"	6"	5"	6"	6"	6"	6"	6"	5"
	–	–	–	–	–	–	6"	3 1/2"	3"	6"	6"	5 1/2"	–	–	–	–	–	–	–	–	–	–	–	–
FROM > 110 TO 170	6"	3 1/2"	3"*****	4"	3"**	–	5"	3"	3"***	6"	3 1/2"	3 1/2"	6"	6"	6"	5 1/2"	3 1/2"	3"	6"	6"	6"	5 1/2"	3 1/2"	3"
	6"	4 1/2"	3 3/4"	4"	4"**	–	6"	5"	5"	6"	6"	6"	6"	6"	6"	6"	5"	4"	6"	6"	6"	6"	5"	4"
	–	–	–	–	–	–	4 1/2"	3"	2 1/2"	6"	5 1/2"	4 1/2"	–	–	–	–	–	–	–	–	–	–	–	–
FROM > 170 TO 195	6"	3 1/2"	–	3"	–	–	4 1/2"	3 1/2"	–	5 1/2"	5 1/2"	–	6"	6"	–	5"	3 1/2"	–	6"	6"	–	5"	3 1/2"	–
	6"	4 1/2"	–	4"	–	–	6"	5 1/2"	–	6"	6"	–	6"	6"	–	6"	5"	–	6"	6"	–	6"	5"	–
	–	–	–	–	–	–	4"	3"	–	6"	5 1/2"	–	–	–	–	–	–	–	–	–	–	–	–	–

\+ MAXIMUM ANCHOR SPACINGS LISTED BELOW ARE AS PER MIN. EDGE DISTANCE SCHEDULE. FOR E.D. LESS THAN THAN SCHEDULE INDICATED, REDUCE ANCHOR SPACING BY MULTIPLYING SPACING SHOWN ON SCHEDULE BY THE FOLLOWING FACTORS. FOR THIS OPERATION TO BE POSSIBLE, REDUCED SPACING OBTAINED USING FACTOR SHALL NOT BE LESS THAN MINIMUM SPACING INDICATED FOR EACH ANCHOR TYPE AT ANCHORS LEGEND.

ACTUAL E.D.	FACTOR		
	1/4"ø TAPCON	5/16"ø TAPCON XL	1/4"ø CALK–IN
	MIN. SPACING=3"	MIN. SPACING=3.75"	MIN. SPACING=2.50"
1.50"	–	–	–
2.00"	–	–	–
2.50"	–	.89	.50
2.688"	–	.96	–
3.00"	1.00	.96	.63
3.625"	–	1.00	–

ANCHORS LEGEND

ANCHORS TYPE	MINIMUM ANCHOR SPACING	MINIMUM EDGE DISTANCE	
		CONCRETE	C. BLOCK
1/4"ø TAPCON 3192 psi. (MIN.) CONCRETE	3.00"	3.00"	3.00"
5/16"ø TAPCON XL 2899 psi. (MIN.) CONCRETE	3.75"	3.125"	4.00"
1/4"ø CALK–IN 3000 psi. (MIN.) CONCRETE	2.50"	3.50"	–

1/4"ø TAPCON
5/16"ø TAPCON XL
1/4"ø CALK–IN

ANCHOR SPACING LEGEND

(NOTE 1) Max. ANCHOR SPCG. VALID FOR SPANS OF 5'–0" OR LESS.

(NOTE 2) Max. ANCHOR SPCG. VALID FOR SPANS GREATER THAN 5'–0" TO 9'–0".

(NOTE 3) Max. ANCHOR SPCG. VALID FOR SPANS GREATER THAN 9'–0" TO MAX. ALLOWED.

② HI–PRESSURE BLADE

TEXAS DEPARTMENT OF INSURANCE (T.D.I.)– 2006

WALTER A. TILLIT Jr. P.E.
PROFESSIONAL ENGINEER

6355 N.W. 36TH. ST., STE. 305
VIRGINIA GARDENS, FL. 33166
PHONE : (305) 871–1530 , FAX : (305) 871–1531

TEXAS LIC. # 90691

MID–PRESSURE AND HI–PRESSURE BLADES ACCORDION SHUTTER SYSTEM

B & C METALS ENTERPRISE
8315 NW 74 STREET
MIAMI, FLORIDA 33166
PHONE:(305) 406–0944 / FAX:(305) 406–0946

REV. NO	DESCRIPTION	DATE	REV. No	DESCRIPTION	DATE
1	–	–	3	–	–
2	–	–	4	–	–

DRAWN BY: I.A.

08/14/09 DATE

09–151 DRAWING No

SHEET 15 OF 15