QMI

SERIES 28 OP/EGRESS STORMSAFE SCREEN
OPERABLE IMPACT SCREEN

INSTALLATION AND ANCHORAGE DETAILS

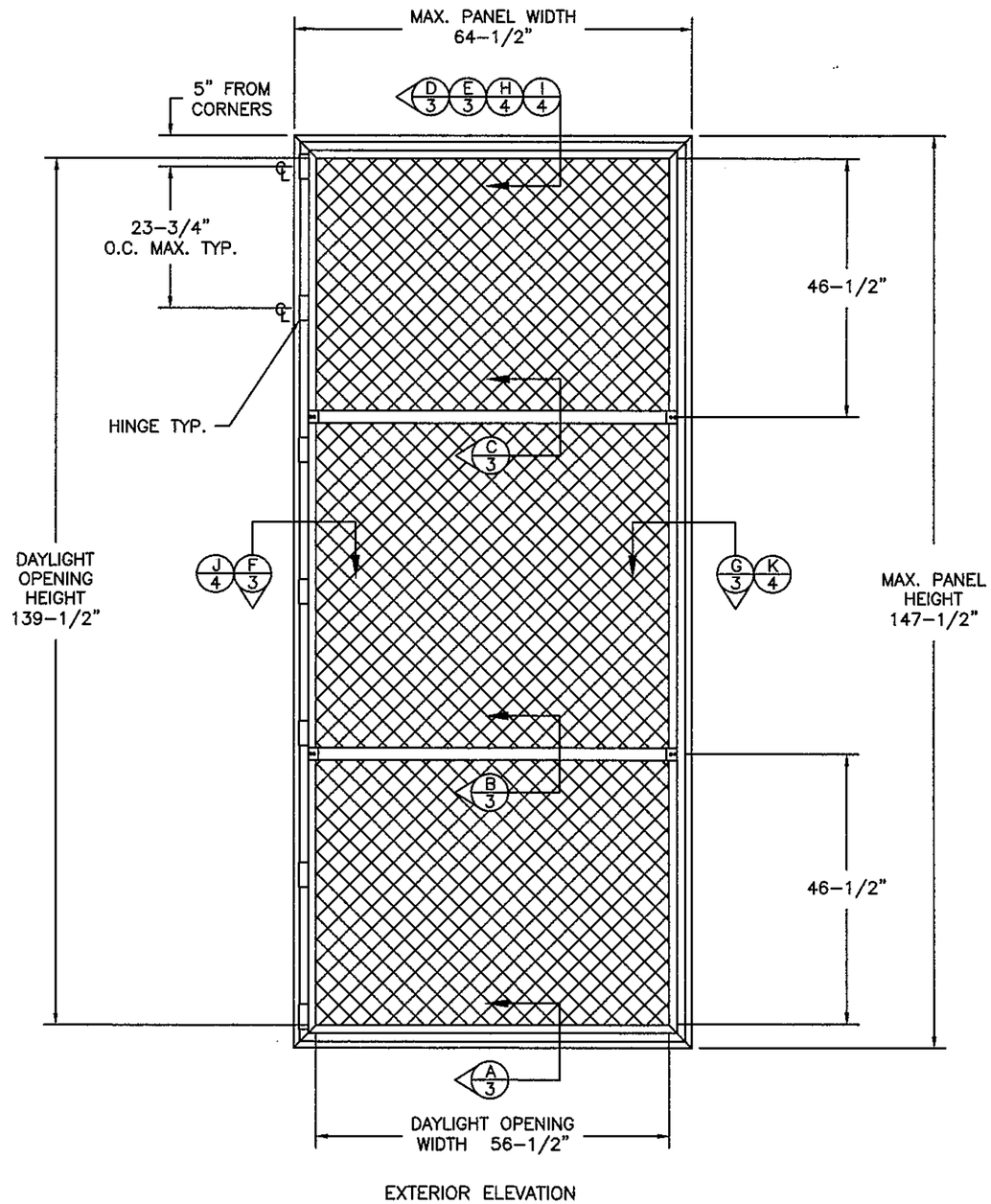

EXTERIOR ELEVATION

1. THE PRODUCT SHOWN HEREIN IS TESTED, DESIGNED AND MANUFACTURED TO COMPLY WITH THE 2006 INTERNATIONAL BUILDING CODE W/TEXAS REVISIONS AND 2006 INTERNATIONAL RESIDENTIAL CODE W/TEXAS REVISIONS.
2. CONCRETE, MASONRY & WOOD FRAMING TO BE DESIGNED AND ANCHORED TO PROPERLY TRANSFER ALL LOADS TO STRUCTURE. FRAMING IS THE RESPONSIBILITY OF THE ARCHITECT OR ENGINEER OF RECORD.
3. IMPACT SCREEN MATERIAL: 304 STAINLESS STEEL. PANEL FRAME MATERIAL: ALUMINUM ALLOY 6005-T5.
4. A MINIMUM GLASS SEPARATION DISTANCE OF 4" SHALL BE PROVIDED FOR ALL INSTALLATIONS.
5. TESTING TO ASTM E330-02, ASTM E1886-02/04 and ASTM E1996-02/04 DOCUMENTED IN TEST REPORT NO. CTLA-1366W-3 BY CERTIFIED TESTING LABORATORIES AND WAIVER OF RETEST NO. W-1888 BY NATIONAL ACCREDITATION AND MANAGEMENT INSTITUTE, INC.

TABLE OF CONTENT

SHEET	DESCRIPTION
1	ELEVATION NOTES
2	ANCHORING & NOTES
3	INSTALLATION DETAILS IN CONCRETE & WOOD FRAME
4	INSTALLATION DETAILS IN CONCRETE & WOOD FRAME
5	COMPONENTS & B.O.M.

MAXIMUM ALLOWABLE DESIGN PRESSURES	IMPACT RATING
+47.0 PSF -53.0 PSF	WIND ZONE 4 MISSILE LEVEL D

PROJECT #417-0712

REV	DESCRIPTION	DATE	BY

1661 GLENLAKE AVE.
ITASCA, IL 60143

TITLE: SERIES 28OP/EGRESS STORMSAFE SCREEN - OPERABLE
GENERAL AND INSTALLATION NOTES

DRAWN BY: RJA
DATE: 12/18/17
SCALE: N.T.S.
DRAWING NO: QMI1004
REV: —
SHEET: 1 OF 5

PREPARED BY:
PTC PRODUCT DESIGN GROUP, LLC
PO BOX 520775
LONGWOOD, FLORIDA 32752
TX Reg. No. F-13740
Phone: 321.690.1788
Fax: 321.690.1789
Email: info@ptc-corp.com

Robert J. Amoruso, P.E.
Texas PE No. 80817

2/8/19

STATE OF TEXAS
ROBERT JAMES AMORUSO
80817
LICENSED
PROFESSIONAL ENGINEER

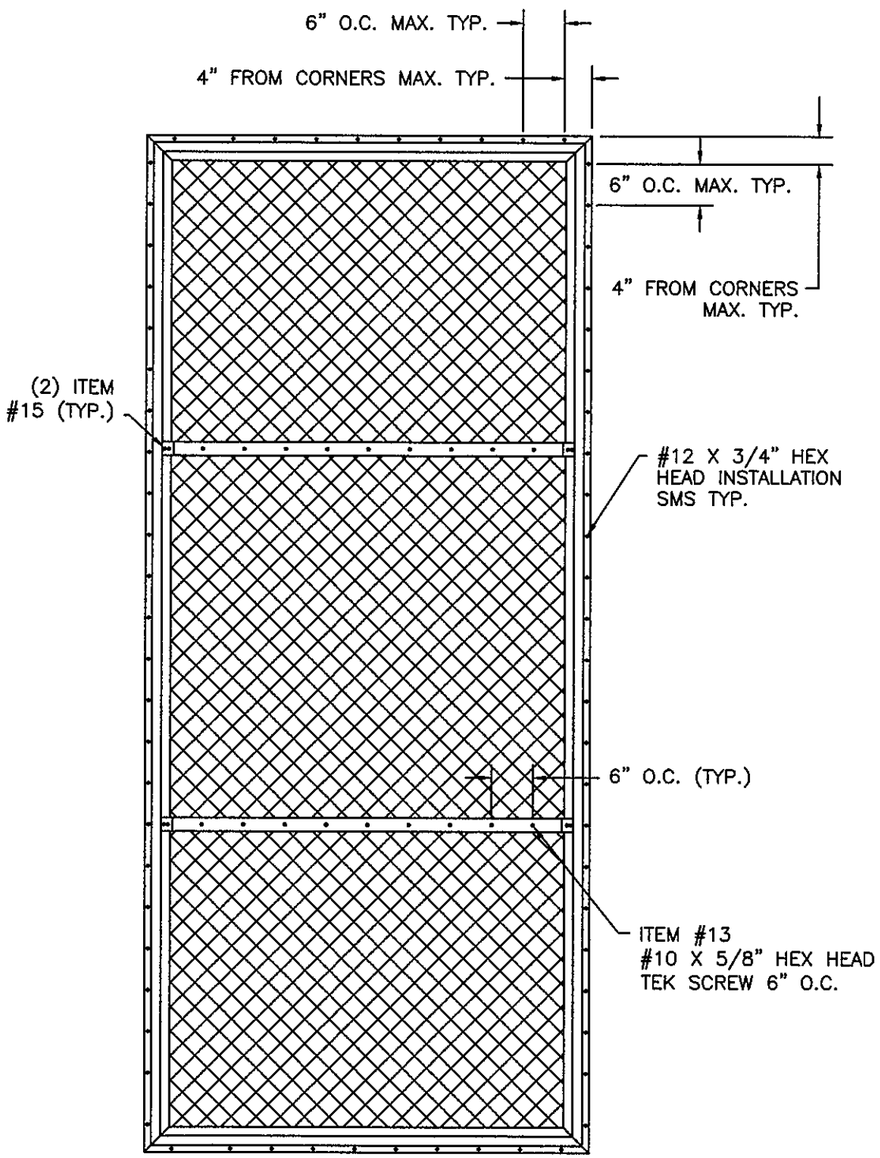

EXTERIOR ELEVATION
PANEL TO ALUMINUM
TUBE ANCHORING

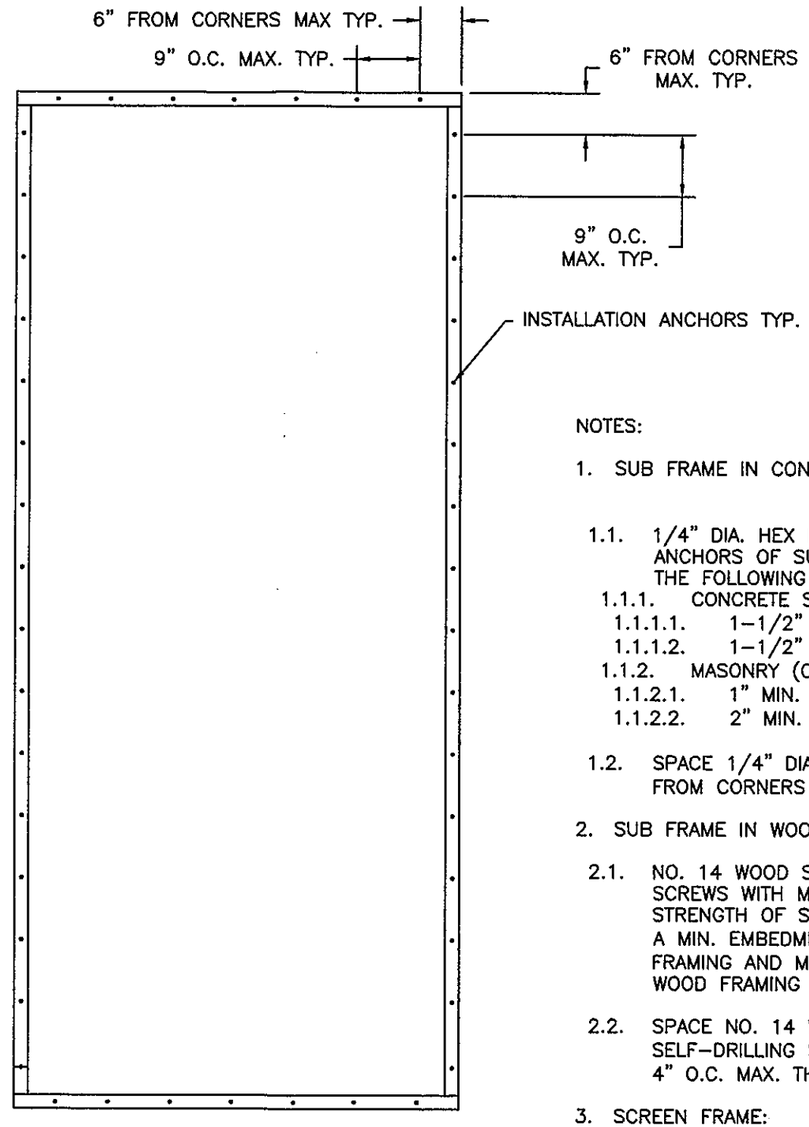

EXTERIOR ELEVATION
ALUMINUM TUBE TO
SUBSTRATE/ WALL
ANCHORING

NOTES:

1. SUB FRAME IN CONCRETE:

1.1. 1/4" DIA. HEX HD. I.T.W. BUILDEX TAPCON ANCHORS OF SUFFICIENT LENGTH TO ACHIEVE THE FOLLOWING
1.1.1. CONCRETE SUBSTRATE
1.1.1.1. 1-1/2" MIN. EMBEDMENT
1.1.1.2. 1-1/2" MIN. EDGE DISTANCE
1.1.2. MASONRY (CMU) SUBSTRATE
1.1.2.1. 1" MIN. EMBEDMENT
1.1.2.2. 2" MIN. EDGE DISTANCE

1.2. SPACE 1/4" DIA. I.T.W. BUILDEX TAPCONS 4" FROM CORNERS & 4" O.C. MAX. THEREAFTER.

2. SUB FRAME IN WOOD FRAMING:

2.1. NO. 14 WOOD SCREWS OR SELF-DRILLING SCREWS WITH MIN. GRADE 2 MATERIAL STRENGTH OF SUFFICIENT LENGTH TO ACHIEVE A MIN. EMBEDMENT OF 1-1/2" INTO WOOD FRAMING AND MIN. EDGE DISTANCE OF 1" TO WOOD FRAMING EDGE.

2.2. SPACE NO. 14 WOOD SCREWS OR SELF-DRILLING SCREWS 4" FROM CORNERS & 4" O.C. MAX. THEREAFTER.

3. SCREEN FRAME:

3.1. #12 X 3/4" HEX HD. SMS SPACE 3" FROM CORNERS AND 6" O.C. MAX. THEREAFTER.

PROJECT #417-0712

REV	DESCRIPTION	DATE	BY

1661 GLENLAKE AVE.
ITASCA, IL 60143

TITLE: SERIES 28OP/EGRESS STORMSAFE SCREEN - OPERABLE ELEVATION & ANCHOR LAYOUTS

DRAWN BY: RJA
DATE: 12/18/17
SCALE: N.T.S.
DRAWING NO: QMI1004
REV: –
SHEET: 2 OF 5

PREPARED BY:
PTC PRODUCT DESIGN GROUP, LLC
PO BOX 520775
LONGWOOD, FLORIDA 32752
TX Reg. No. F-13740
Phone: 321.690.1788
Fax: 321.690.1789
Email: info@ptc-corp.com

Robert J. Amoruso, P.E.
Texas PE No. 80817

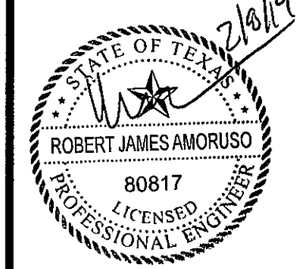

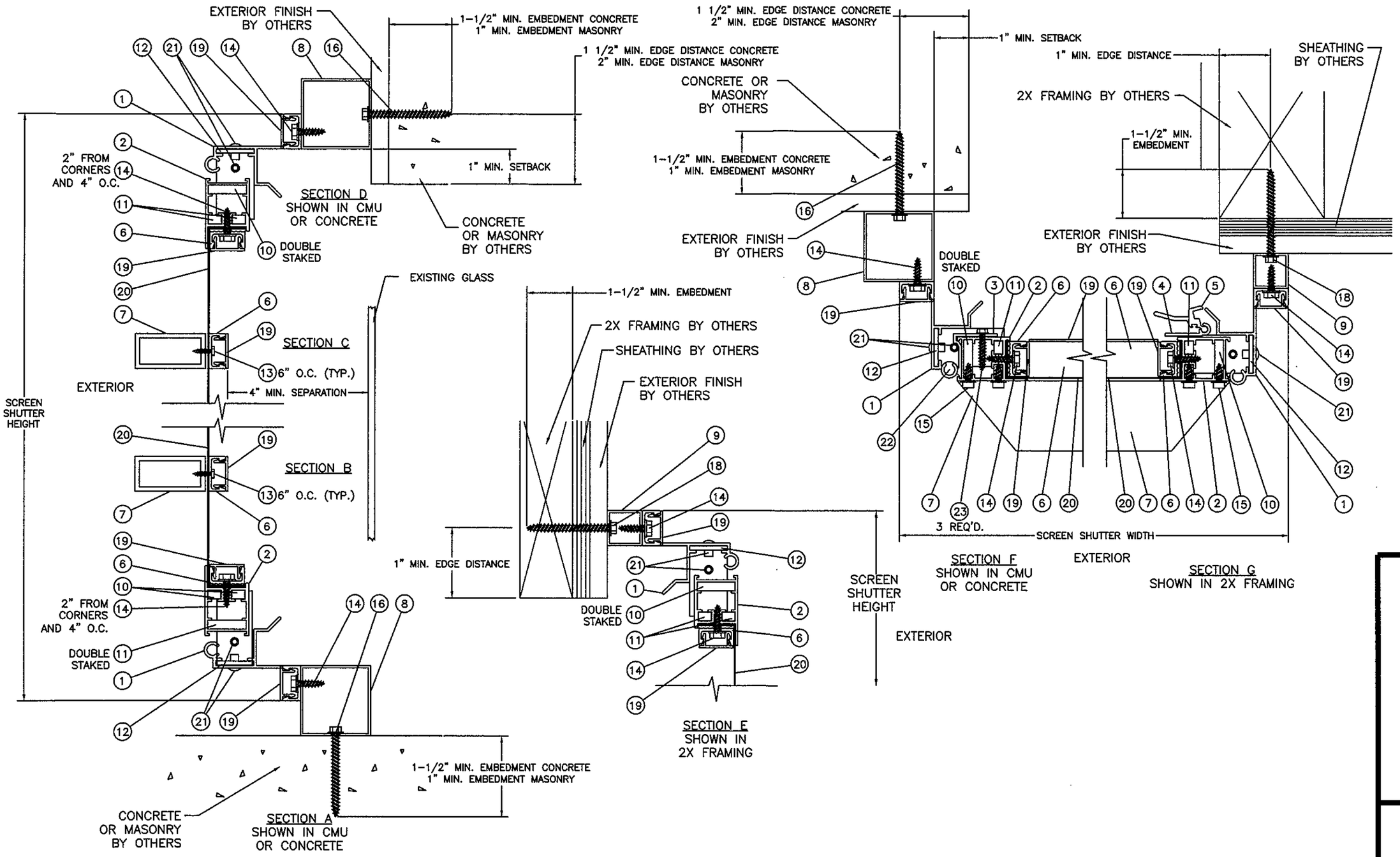

REV	DESCRIPTION	DATE	BY

PROJECT #417-0712

1661 GLENLAKE AVE.
ITASCA, IL 60143

TITLE: SERIES 28OP/EGRESS STORMSAFE SCREEN - OPERABLE VERTICAL & HORIZONTAL SECTIONS

DRAWN BY: RJA
DATE: 12/18/17
SCALE: N.T.S.
DRAWING NO: QMI1004
REV: —
SHEET: 3 OF 5

PREPARED BY:
PTC PRODUCT DESIGN GROUP, LLC
PO BOX 520775
LONGWOOD, FLORIDA 32752
TX Reg. No. F-12740
Phone: 321.690.1788
Fax: 321.690.1789
Email: info@ptc-corp.com

Robert J. Amoruso, P.E.
Texas PE No. 80817

2/8/19

STATE OF TEXAS
ROBERT JAMES AMORUSO
80817
LICENSED
PROFESSIONAL ENGINEER

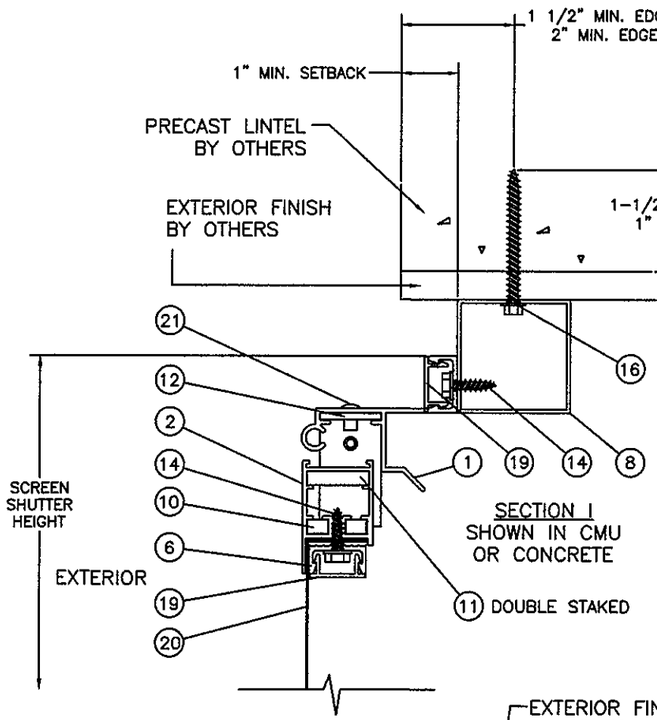

SECTION I
SHOWN IN CMU OR CONCRETE

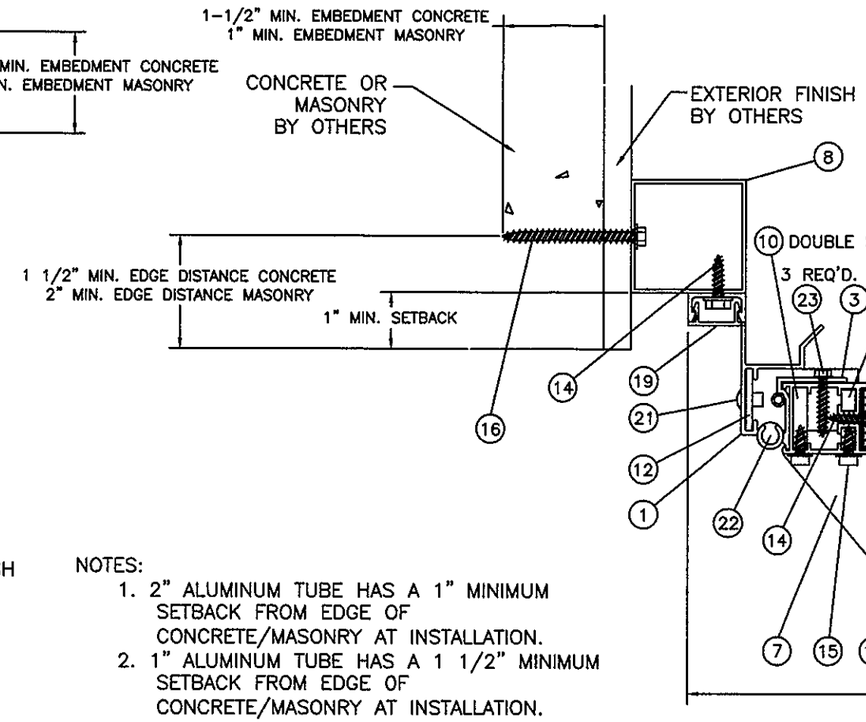

SECTION J
SHOWN IN CMU OR CONCRETE

EXTERIOR

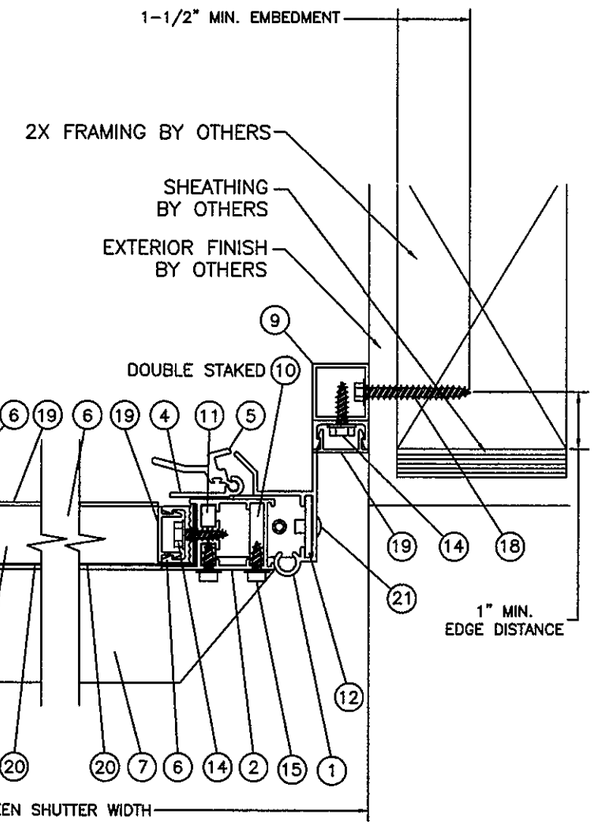

SECTION K
SHOWN IN 2X FRAMING

NOTES:

1. 2" ALUMINUM TUBE HAS A 1" MINIMUM SETBACK FROM EDGE OF CONCRETE/MASONRY AT INSTALLATION.
2. 1" ALUMINUM TUBE HAS A 1 1/2" MINIMUM SETBACK FROM EDGE OF CONCRETE/MASONRY AT INSTALLATION.

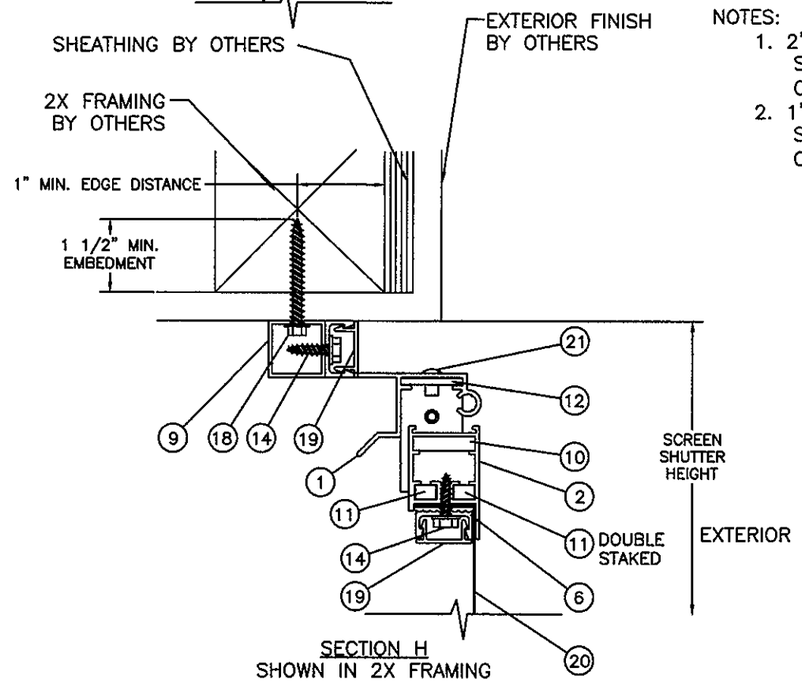

SECTION H
SHOWN IN 2X FRAMING

REV	DESCRIPTION	DATE	BY

PROJECT #417-0712

QMI
1661 GLENLAKE AVE.
ITASCA, IL 60143

TITLE: SERIES 28OP/EGRESS STORMSAFE SCREEN - OPERABLE VERTICAL & HORIZONTAL SECTIONS

DRAWN BY: RJA
DATE: 12/18/17
SCALE: N.T.S.
DRAWING NO: QMI1004
REV: —
SHEET: 4 OF 5

PREPARED BY:
PTC PRODUCT DESIGN GROUP, LLC
PO BOX 520775
LONGWOOD, FLORIDA 32752
TX Reg. No. F-13740
Phone: 321.690.1788
Fax: 321.690.1789
Email: info@ptc-corp.com

Robert J. Amoruso, P.E.
Texas PE No. 80817

2/19/19

STATE OF TEXAS
ROBERT JAMES AMORUSO
80817
LICENSED
PROFESSIONAL ENGINEER

1 FRAME HEAD, SILL & JAMB
TYP. WALL THICKNESS 0.075

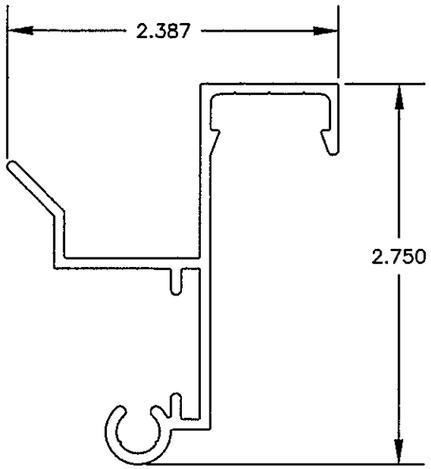

2 VENT HEAD, SILL & JAMB, TYP. WALL THICKNESS 0.075

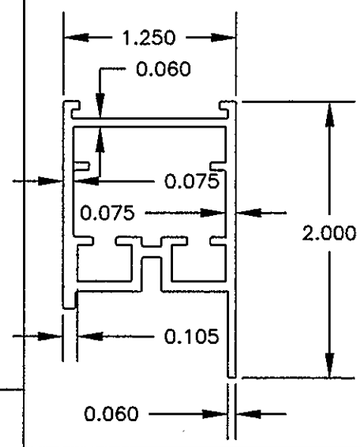

3 SCREEN HINGE
TYP. WALL
THICKNESS 0.078

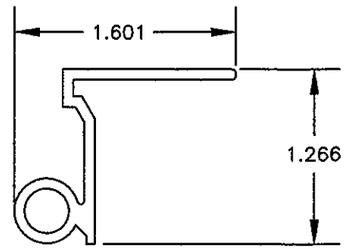

4 SCREEN LOCK PART A
TYP. WALL
THICKNESS 0.080

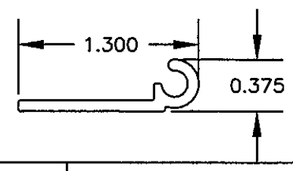

5 SCREEN LOCK PART B
TYP. WALL THICKNESS 0.110

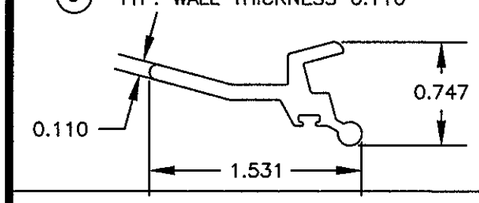

6 WIRE RETAINER
TYP. WALL THICKNESS 0.075

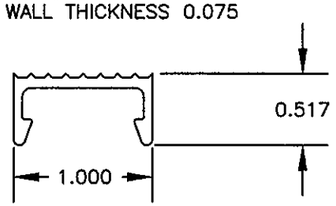

7 1" X 2" ALUMINUM TUBE
TYP. WALL THICKNESS 0.125

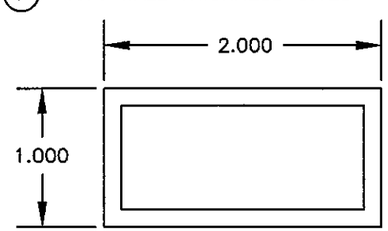

8 2" X 2" ALUMINUM TUBE
TYP. WALL THICKNESS 0.062

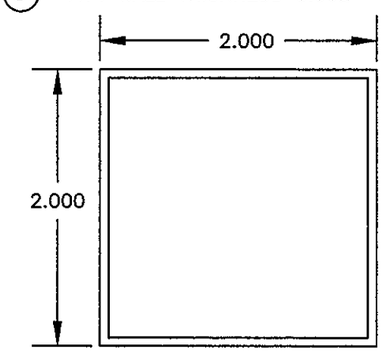

9 1" X 1" ALUMINUM TUBE
TYP. WALL
THICKNESS 0.062

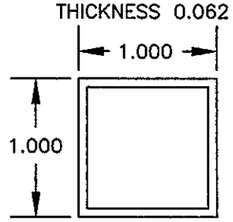

19 SCREEN COVER
TYP. WALL
THICKNESS 0.050

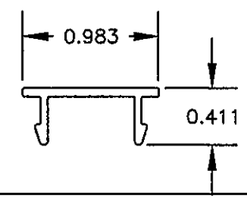

BILL OF MATERIALS

ITEM #	PART #	DESCRIPTION
1	2726	FRAME HEAD, SILL & JAMB 6005–T5 ALUMINUM
2	2711	VENT HEAD, SILL & STILE 6005–T5 ALUMINUM
3	2733	SCREEN HINGE 6005–T5 ALUMINUM
4	2724	SNAP LOCK PART A
5	2725	SNAP LOCK PART B
6	2721	WIRE RETAINER
7		1" X 2" X 1/8" ALUMINUM TUBE 6063–T5
8		2" X 2" X 1/16" ALUMINUM TUBE 6063–T5
9		1" X 1" & 1" X 2" X 1/16" ALUMINUM TUBE 6063–T5
10		OUTER VENT CORNER KEY 2" X 2" X 1.1 X 1/4" 6061–T6 ALUM.
11		INNER VENT CORNER KEY 2" X 2" X .400 X 1/8" 6061–T6 ALUM.
12		SUB FRAME ANGLE CORNER KEY 2" X 2" X 1/8" 6061–T6 ALUM.
13		#10 X 5/8" TEK SCREW
14		#12 –14 X 3/4" HEX HEAD SMS
15		#14 X 1/2" HEX HEAD SELF TAPPING FASTENER
16		1/4" HEX HEAD ITW TAPCON
17		NOT USED
18		NO. 14 WOOD SCREW OR SELF–DRILLING SCREW
19	2730	SCREW COVER
20		MESH 12 X 12 SCREEN SS 304 THREAD 0.028" OR 0.032" THICK
21		1/8" POP RIVET
22		SPRING LOADED HINGE PIN ASSEMBLY
23		#12 X 1" HEX HEAD SELF TAPPING SMS

PROJECT #417-0712

REV	DESCRIPTION	DATE	BY

1661 GLENLAKE AVE.
ITASCA, IL 60143

TITLE: SERIES 28OP/EGRESS STORMSAFE SCREEN - OPERABLE COMPONENTS & BILL OF MATERIALS

DRAWN BY: RJA
DATE: 12/18/17
SCALE: N.T.S.
DRAWING NO: QMI1004
REV: –
SHEET: 5 OF 5

PREPARED BY:
PTC PRODUCT DESIGN GROUP, LLC
PO BOX 520775
LONGWOOD, FLORIDA 32752
TX Reg. No. F-13740
Phone: 321.690.1788
Fax: 321.690.1789
Email: info@ptc-pdg.com

Robert J. Amoruso, P.E.
Texas PE No. 80817

2/9/19

STATE OF TEXAS
ROBERT JAMES AMORUSO
80817
LICENSED
PROFESSIONAL ENGINEER