WINCORE™
WINDOWS & DOORS

250 Staunton Turnpike, Parkersburg, WV 26104

TMP-2603
EXTRUDED ALUMINUM
HORIZONTAL CLIPPED COMBINATION MULLION

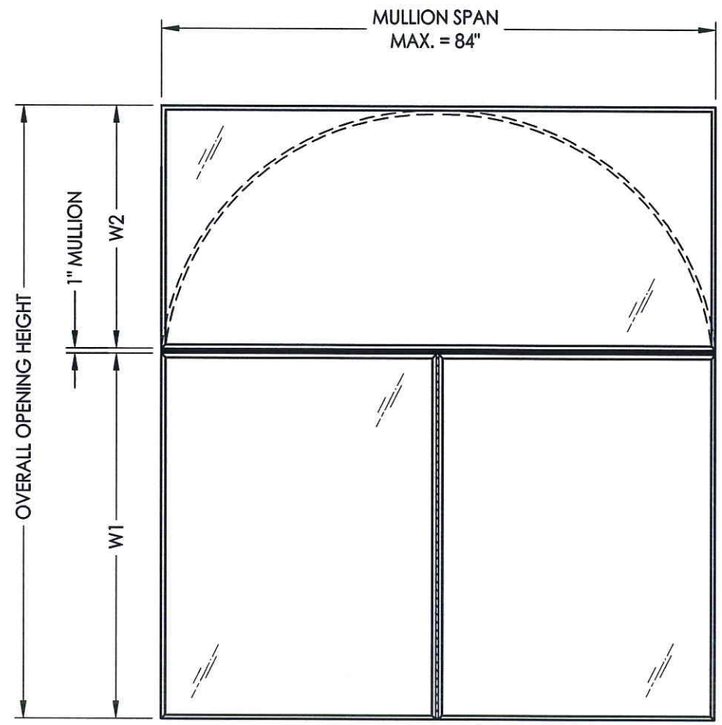

HORIZONTAL MULLED WINDOW UNITS

ADJOINING WINDOW UNITS CAN BE EQUAL OR UNEQUAL WIDTHS

EVALUATED FOR USE IN THE STATE OF TEXAS

The Wincore Structural Mullion described herein complies with the 2006 International Residential Code (IRC), Sections R613.9 and the 2006 International Building Code (IBC), (including Texas Revisions), subject to the following conditions:

1. Anchors shall be as listed and spaced as shown in the details. Anchor embedment to base material shall be beyond roof covering.
2. When used in areas requiring wind-borne debris protection (Seaward and Inland I areas), this product complies with Section R301.2.1.2 of the IRC and Section 1609.1.2 of the IBC and does not require impact protection. This product meets missile level "D" and includes Wind Zone 3 as defined in ASTM E 1996.
3. Separate product approvals for each glazing product used with these mullions must be submitted along with this mullion product approval. The design pressure rating of the assembly shall be the lesser of the load capacity of the mullion as specified using this approval or the design pressure rating of the individual glazing products used.
4. Anchoring of each glazing product to the mullion shall be as shown in this drawing or as shown in each individual glazing product approval, whichever is more stringent.
5. Any conditions not covered in this evaluation are subject to separate engineering evaluation.
6. Mulled assemblies may be either factory assembled or site assembled.

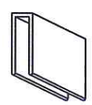

Mullion-to-Mullion Clip

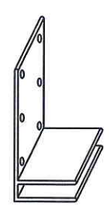

Wood/Steel Stud Anchor Clip

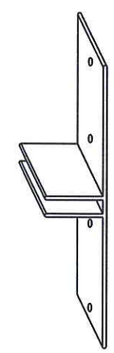

Masonry Anchor Clip

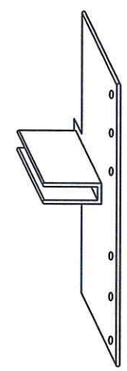

Masonry or Wood/Steel Stud Offset Anchor Clip

TABLE OF CONTENTS

SHEET #	DESCRIPTION
1	Typical elevations & general notes
2	Mullion design pressure table & cross sections
3	Wood/Steel Stud Anchor Clip details & cross sections
4	Masonry Anchor Clip details & cross sections
5	Masonry or Wood/Steel Stud Offset Anchor Clip details & cross sections

STATE OF TEXAS
LYNDON F. SCHMIDT
104123
LICENSED
PROFESSIONAL ENGINEER
11.26.14

Documents Prepared By: Lyndon F. Schmidt, P.E.
TEXAS P.E. #104123
RW BUILDING CONSULTANTS, INC.
P.O. Box 230 Valrico FL. 33595
Phone No.: 813.659.9197
TEXAS BOARD OF PROFESSIONAL ENGINEERS
CERTIFICATE OF REGISTRATION # F-11852

PRODUCT: ALUMINUM CLIPPED MULLION

PART OR ASSEMBLY: TYPICAL ELEVATIONS & GENERAL NOTES

REVISIONS

NO.	DATE	BY

DATE: 11/25/14
SCALE: N.T.S.
DWG. BY: JK
CHK. BY: LFS
DRAWING NO.: TX-4389
SHEET 1 OF 5

© 2014 R.W. BUILDING CONSULTANTS INC.

R:\A - Projects\Project Folders\Proj 1701 - 1800\PF 1727\D. RWBC Drawings\TX-4386-89.dwg, TX-4389

TMP-2603 EXTRUDED ALUMINUM HORIZONTAL CLIPPED COMBINATION MULLION LOAD TABLE (PSF)

CLIPPED MULLION — MAXIMUM MULLION LENGTH	OVERALL OPENING HEIGHT 49"	53"	57"	61"	65"	69"	73"	77"	81"	85"	89"	93"	97"	101"	105"	109"	113"	117"	121"	125"	129"	133"	137"	141"	145"
84"	58.0	53.5	49.5	46.5	43.5	41.0	38.5	36.5	35.0	33.0	31.5	30.5	29.0	28.0	27.0	26.0	25.0	-	-	-	-	-	-	-	-
82"	62.0	57.5	53.5	50.0	47.0	44.0	41.5	39.5	37.5	36.0	34.0	32.5	31.5	30.0	29.0	28.0	27.0	26.0	25.0	-	-	-	-	-	-
80"	67.0	62.0	57.5	54.0	50.5	47.5	45.0	42.5	40.5	38.5	37.0	35.0	33.5	32.5	31.0	30.0	29.0	28.0	27.0	26.0	25.5	-	-	-	-
78"	72.0	67.0	62.0	58.0	54.5	51.0	48.5	46.0	43.5	41.5	39.5	38.0	36.5	35.0	33.5	32.5	31.0	30.0	29.0	28.0	27.5	26.5	25.5	25.0	-
76"	75.0	72.0	67.0	62.5	59.0	55.5	52.5	49.5	47.0	45.0	43.0	41.0	39.5	38.0	36.5	35.0	34.0	32.5	31.5	30.5	29.5	28.5	28.0	27.0	26.5
74"	75.0	75.0	73.0	68.0	64.0	60.0	56.5	54.0	51.0	48.5	46.5	44.5	42.5	41.0	39.5	38.0	36.5	35.5	34.0	33.0	32.0	31.0	30.0	29.5	28.5
72"	75.0	75.0	75.0	74.0	75.0	65.0	61.5	58.5	55.5	53.0	50.5	48.5	46.5	44.5	43.0	41.0	39.5	38.5	37.0	36.0	35.0	33.0	32.5	32.0	31.0
70"	75.0	75.0	75.0	75.0	75.0	71.0	67.0	63.5	60.5	57.5	55.0	52.5	50.5	48.5	46.5	45.0	43.0	42.0	40.0	39.0	38.0	36.5	35.5	34.5	33.5
68"	75.0	75.0	75.0	75.0	75.0	75.0	73.0	69.5	66.0	63.5	60.0	57.5	55.0	53.0	51.0	49.0	47.0	45.5	44.0	42.5	41.5	40.0	39.0	38.0	37.0
66"	75.0	75.0	75.0	75.0	75.0	75.0	75.0	75.0	72.0	69.0	65.5	63.0	60.0	58.0	55.5	53.5	51.5	50.0	48.0	46.5	45.0	44.0	42.5	41.5	40.0
64"	75.0	75.0	75.0	75.0	75.0	75.0	75.0	75.0	75.0	75.0	72.0	69.0	66.0	63.5	61.0	59.0	56.5	54.5	53.0	51.0	49.5	48.0	46.5	45.5	44.0
62"	75.0	75.0	75.0	75.0	75.0	75.0	75.0	75.0	75.0	75.0	75.0	75.0	72.5	70.0	67.0	64.5	62.5	60.0	58.0	56.5	54.5	53.0	51.5	50.5	48.5
60"	75.0	75.0	75.0	75.0	75.0	75.0	75.0	75.0	75.0	75.0	75.0	75.0	75.0	75.0	74.0	71.5	69.0	66.5	64.0	62.0	60.5	58.5	56.5	55.0	53.5

DESIGN PRESSURE TABLE NOTES:

1. Determine the Overall Opening Height for the two windows to be mulled together.
2. Enter the table at the intersection of the Mullion Length and the Overall Opening Height to determine the maximum approved Design Pressure.

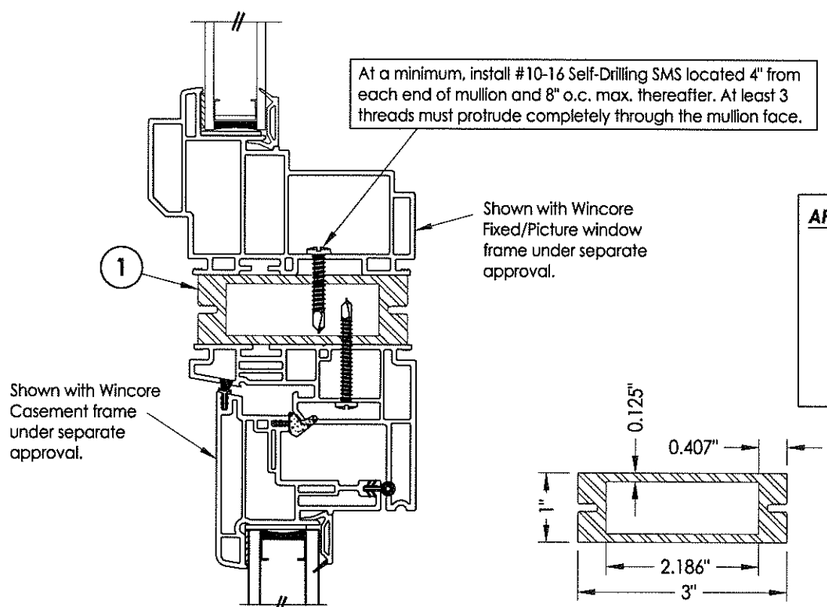

1/2 FRAME TO MULLION CONNECTION

1 TMP-2603 MULLION
6063-T6 ALUM.

APPROVED WINDOW UNIT TYPES

- Fixed/Picture Windows
- Casement Windows
- Awning Windows
- Horizontal Slider Windows
- Single Hung Windows
- Double Hung Windows

OVERALL OPENING HEIGHT = W1 + W2 + 1 (inch)

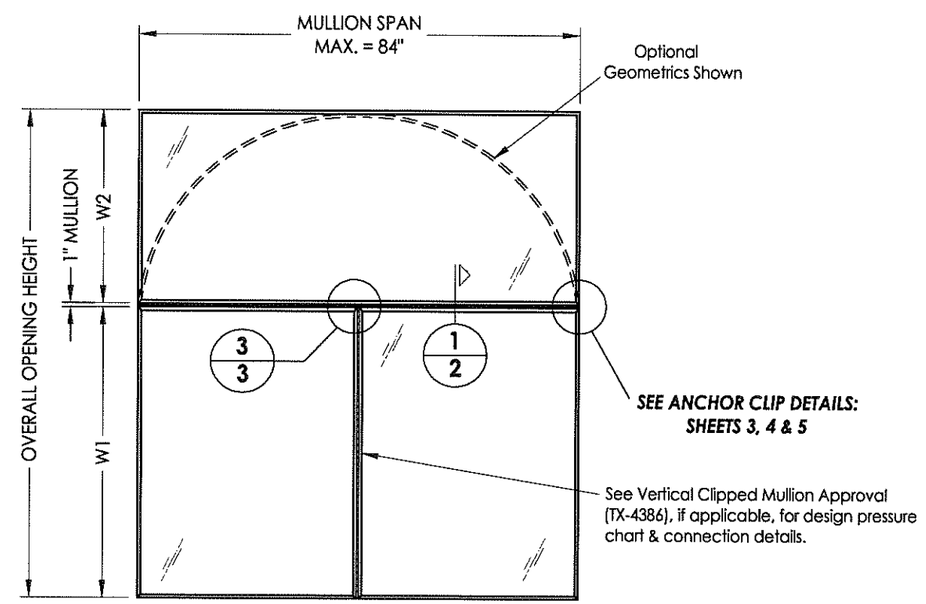

STATE OF TEXAS — LYNDON F. SCHMIDT — 104123 — LICENSED PROFESSIONAL ENGINEER — 11-26-14

Documents Prepared By: Lyndon F. Schmidt, P.E.
TEXAS P.E. #104123
RW BUILDING CONSULTANTS, INC.
P.O. Box 230 Valrico FL. 33595
Phone No.: 813.659.9197
TEXAS BOARD OF PROFESSIONAL ENGINEERS CERTIFICATE OF REGISTRATION # F-11852

PRODUCT: ALUMINUM CLIPPED MULLION

PART OR ASSEMBLY: MULLION DESIGN PRESSURE TABLE & CROSS SECTIONS

REVISIONS

NO.	DATE	BY

DATE: 11/25/14
SCALE: N.T.S.
DWG. BY: JK
CHK. BY: LFS
DRAWING NO.: TX-4389
SHEET 2 OF 5

© 2014 R.W. BUILDING CONSULTANTS INC.

R:\A - Projects\Project Folders\Proj 1701 - 1800\PF 1727\D. RWBC Drawings\TX-4386-89.dwg, 2-8

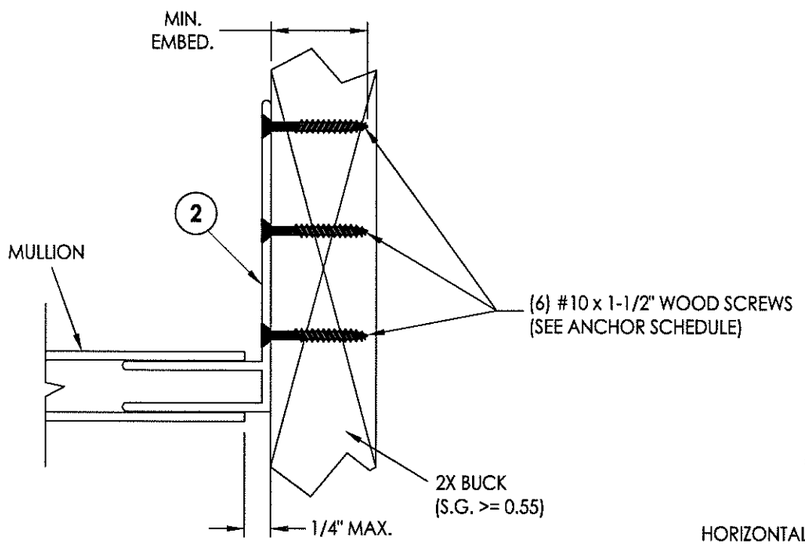

1/3 ANCHOR BRACKET DETAIL
Anchor to 2x Buck

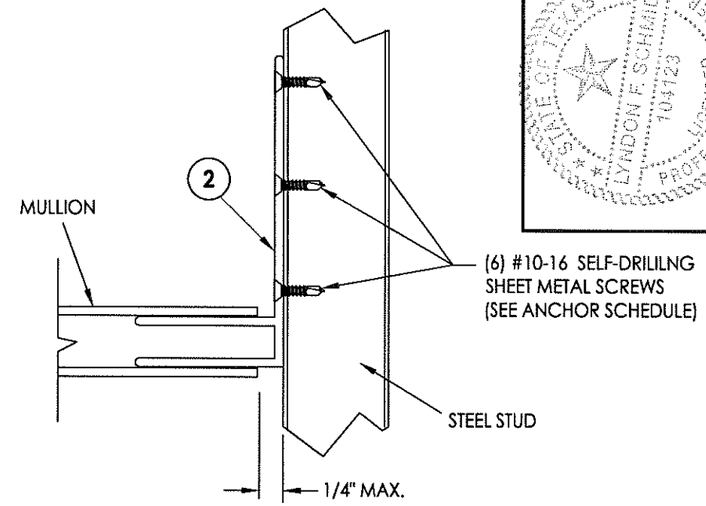

2/3 ANCHOR BRACKET DETAIL
Anchor to Steel Stud

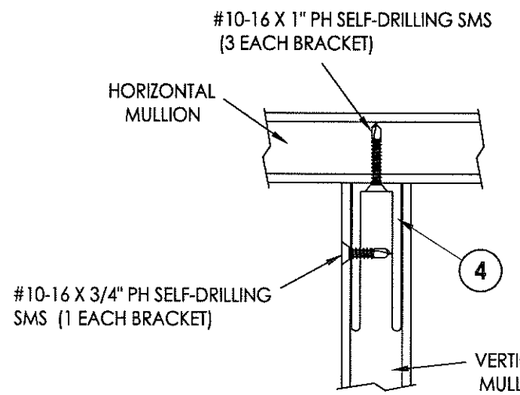

3/3 VERTICAL CROSS SECTION
Mullion-to-Mullion connection

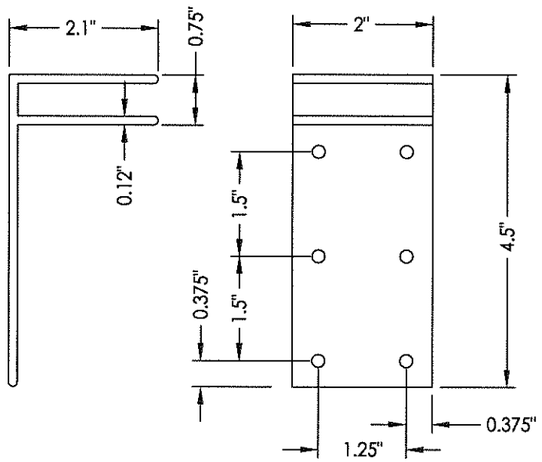

2 WOOD/STEEL STUD ANCHOR BRACKET
6063-T6 ALUM.

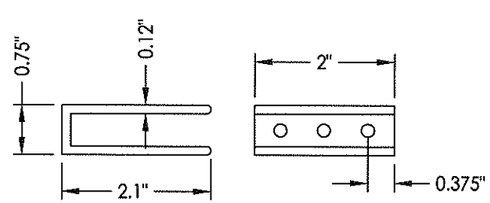

4 MULLION-TO-MULLION ANCHOR BRACKET
6063-T6 ALUM.

Notes:

1. Refer to individual window product approval for fabrication and installation requirements, including glazing details, frame reinforcement and anchor specifications.
2. Mullion bracket anchoring details shown may be used at either end of mullion.

MULLION ANCHOR BRACKET ANCHOR SCHEDULE

ANCHOR	SUBSTRATE	EMBEDMENT (MIN.)	EDGE DISTANCE (MIN.)	CENTER-TO-CENTER SPACING (MIN.)
#10 PFH WOOD SCREW	WOOD	1-3/8"	1"	1-1/4"
#10-16 SELF-DRILLING SHEET METAL SCREW	STEEL	A MIN. OF 3 THREADS SHALL PROTRUDE COMPLETELY THROUGH THE STEEL SUBSTRATE	1"	1-1/4"

WOOD FRAMING (S.G. >= 0.42)
STEEL CONFORMING TO ASTM A653, 16 GA., 0.060" MIN. THICKNESS (Fy = 33,000 PSI, Fu = 45,000 PSI)
SHEET METAL SCREWS (SAE GRADE 5 MIN.): HILTI KWIK-FLEX or ELCO DRIL-FLEX

STATE OF TEXAS
LYNDON F. SCHMIDT
104123
PROFESSIONAL ENGINEER
LICENSED
11.26.14

Documents Prepared By: Lyndon F. Schmidt, P.E.
TEXAS P.E. #104123
RW BUILDING CONSULTANTS, INC.
P.O. Box 230 Valrico FL 33595
Phone No.: 813.659.9197
TEXAS BOARD OF PROFESSIONAL ENGINEERS
CERTIFICATE OF REGISTRATION # F-11852

PRODUCT: ALUMINUM CLIPPED MULLION

PART OR ASSEMBLY: ANCHOR BRACKET DETAILS & CROSS SECTIONS

NO.	DATE	REVISIONS	BY

DATE: 11/25/14
SCALE: N.T.S.
DWG. BY: JK
CHK. BY: LFS
DRAWING NO.: TX-4389
SHEET 3 OF 5

© 2014 R.W. BUILDING CONSULTANTS INC.

R:\A - Projects\Project Folders\Proj 1701 - 1800\PF 1727\D. RWBC Drawings\TX-4386-89.dwg, 3-8

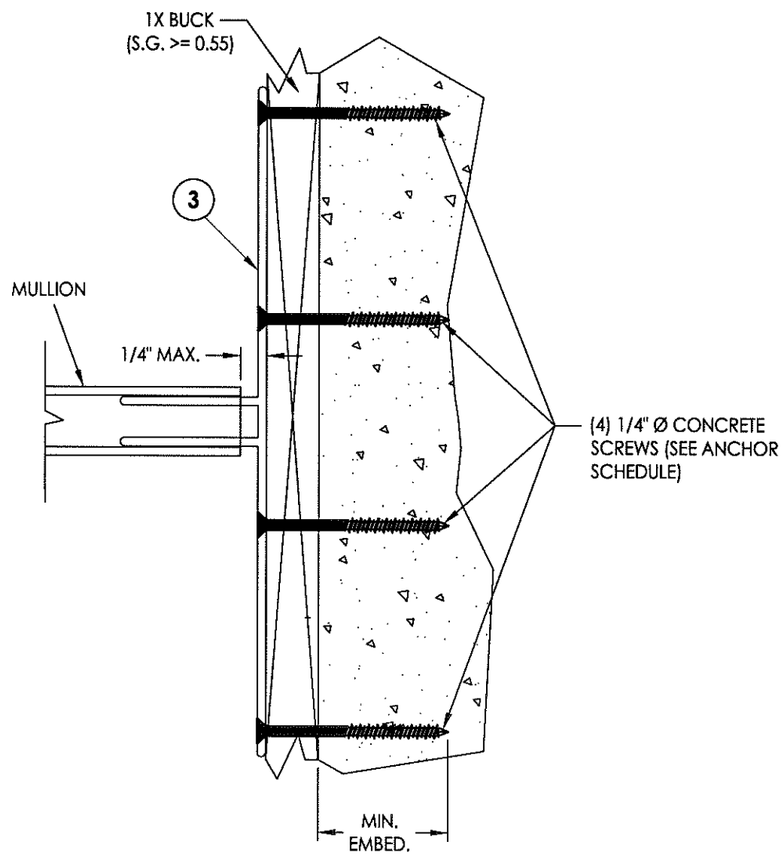

1/4 ANCHOR BRACKET DETAIL
Anchor to Masonry thru 1x Buck

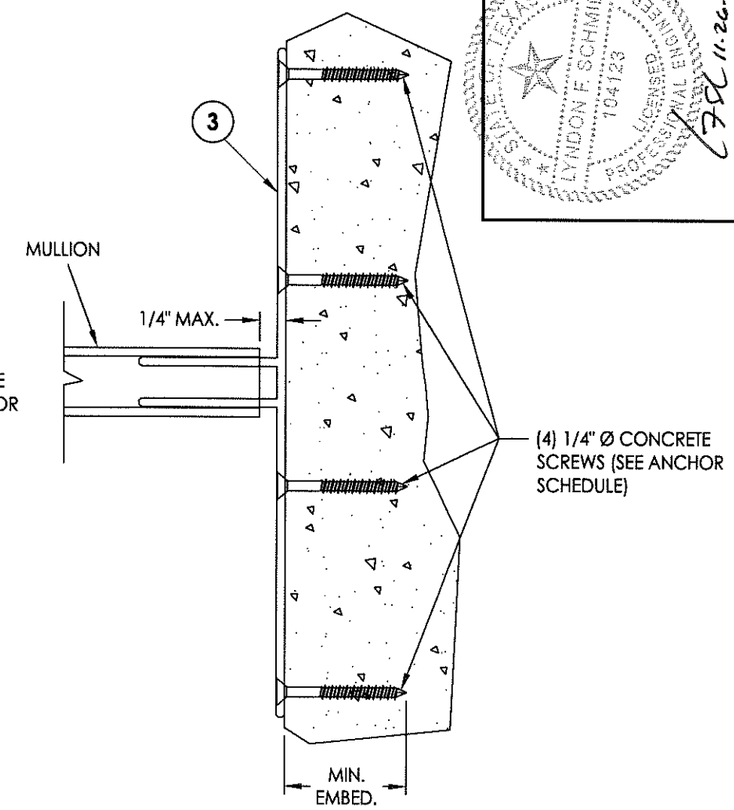

2/4 ANCHOR BRACKET DETAIL
Anchor Direct to Masonry

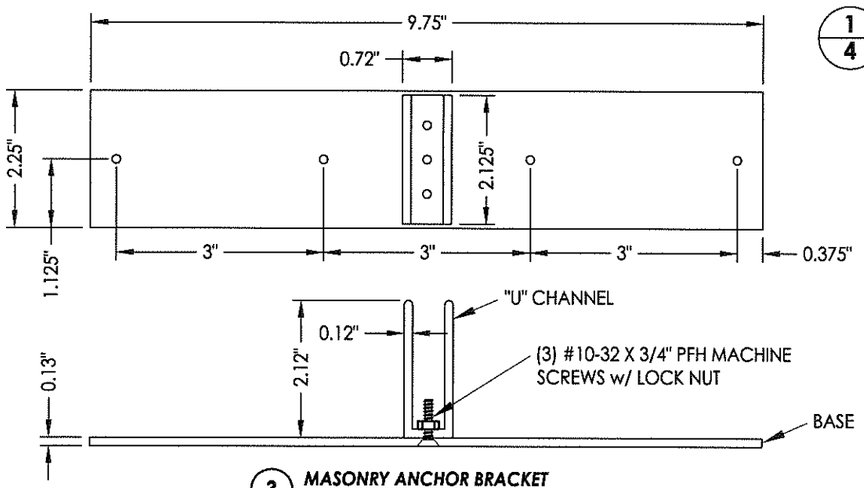

3 MASONRY ANCHOR BRACKET
BASE (6061-T6 ALUM.)
"U" CHANNEL (6063-T6 ALUM.)

Notes:
1. Refer to individual window product approval for fabrication and installation requirements, including glazing details, frame reinforcement and anchor specifications.
2. Mullion bracket anchoring details shown may be used at either end of mullion.

MULLION ANCHOR BRACKET ANCHOR SCHEDULE				
ANCHOR	SUBSTRATE	EMBEDMENT (MIN.)	EDGE DISTANCE (MIN.)	CENTER-TO-CENTER SPACING (MIN.)
1/4" Ø PFH HILTI KWIK-CON II+	HOLLOW BLOCK	1-1/4"	2-1/2"	3"
	CONCRETE	1-1/4"	2-1/2"	3"

CONCRETE CONFORMING TO ACI 301 (3,000 PSI MIN.) OR HOLLOW BLOCK CONFORMING TO ASTM C90

STATE OF TEXAS
LYNDON F. SCHMIDT
104123
LICENSED
PROFESSIONAL ENGINEER
11.26.14

Documents Prepared By: Lyndon F. Schmidt, P.E.
TEXAS P.E. #104123
RWBC BUILDING CONSULTANTS, INC.
P.O. Box 230 Valrico FL. 33595
Phone No.: 813.859.9197
TEXAS BOARD OF PROFESSIONAL ENGINEERS
CERTIFICATE OF REGISTRATION # F-11852

PRODUCT: ALUMINUM CLIPPED MULLION

PART OR ASSEMBLY: ANCHOR BRACKET DETAILS & CROSS SECTIONS

NO.	DATE	REVISIONS	BY

DATE: 11/25/14
SCALE: N.T.S.
DWG. BY: JK
CHK. BY: LFS
DRAWING NO.: TX-4389
SHEET 4 OF 5

© 2014 R.W. BUILDING CONSULTANTS INC.

R:\A - Projects\Project Folders\Proj 1701 - 1800\PF 1727\D. RWBC Drawings\TX-4386-89.dwg, 4-8

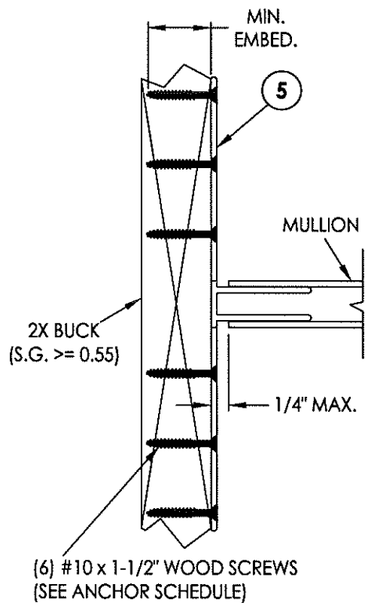

1/5 ANCHOR BRACKET DETAIL
Anchor to 2x Buck

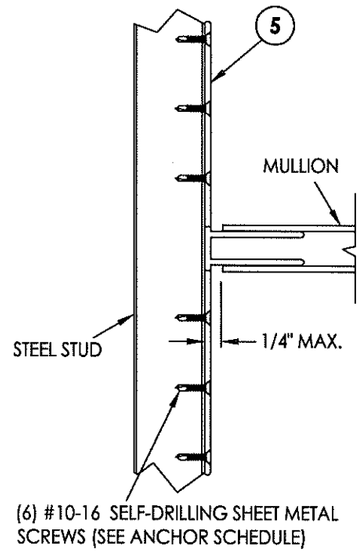

2/5 ANCHOR BRACKET DETAIL
Anchor to Steel Stud

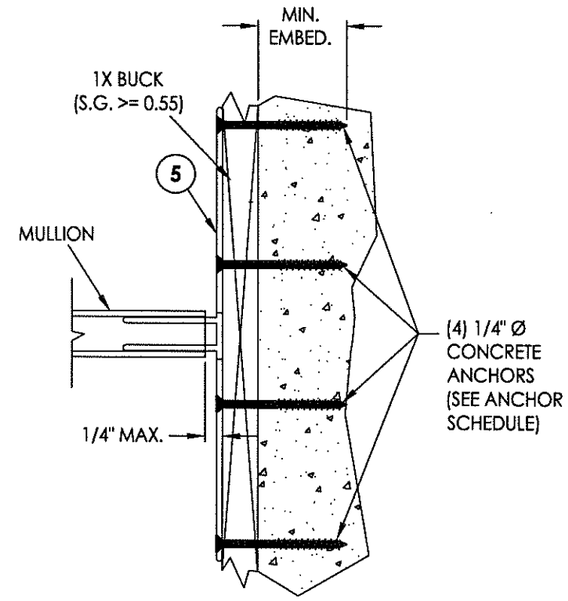

3/5 ANCHOR BRACKET DETAIL
Anchor to Masonry thru 1x Buck

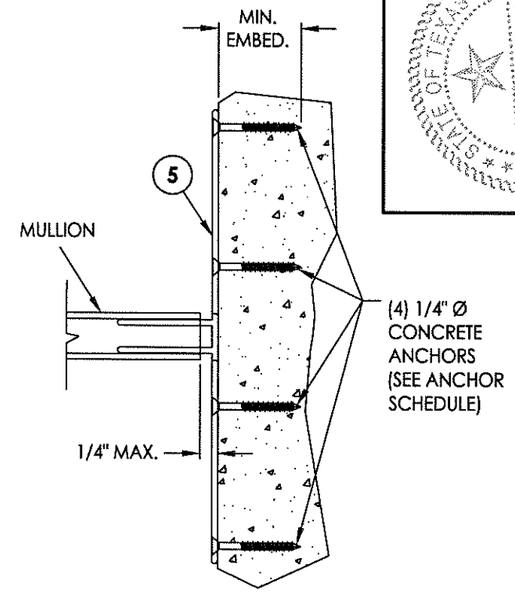

4/5 ANCHOR BRACKET DETAIL
Anchor Direct to Masonry

Notes:

1. Refer to individual window product approval for fabrication and installation requirements, including glazing details, frame reinforcement and anchor specifications.
2. Mullion bracket anchoring details shown may be used at either end of mullion.

MULLION ANCHOR BRACKET ANCHOR SCHEDULE				
ANCHOR	SUBSTRATE	EMBEDMENT (MIN.)	EDGE DISTANCE (MIN.)	CENTER-TO-CENTER SPACING (MIN.)
#10 PFH WOOD SCREW	WOOD	1-3/8"	1"	1-1/4"
#10-16 SELF-DRILLING SHEET METAL SCREW	STEEL	A MIN. OF 3 THREADS SHALL PROTRUDE COMPLETELY THROUGH THE STEEL SUBSTRATE	1"	1-1/4"
1/4" Ø PFH HILTI KWIK-CON II+	HOLLOW BLOCK	1-1/4"	2-1/2"	3"
	CONCRETE	1-1/4"	2-1/2"	3"

WOOD FRAMING (S.G. >= 0.55)
STEEL CONFORMING TO ASTM A653, 16 GA. , 0.060" MIN. THICKNESS (Fy = 33,000 PSI, Fu = 45,000 PSI)
SHEET METAL SCREWS (SAE GRADE 5 MIN.): HILTI KWIK-FLEX or ELCO DRIL-FLEX
CONCRETE CONFORMING TO ACI 301 (3,000 PSI MIN.) OR HOLLOW BLOCK CONFORMING TO ASTM C90

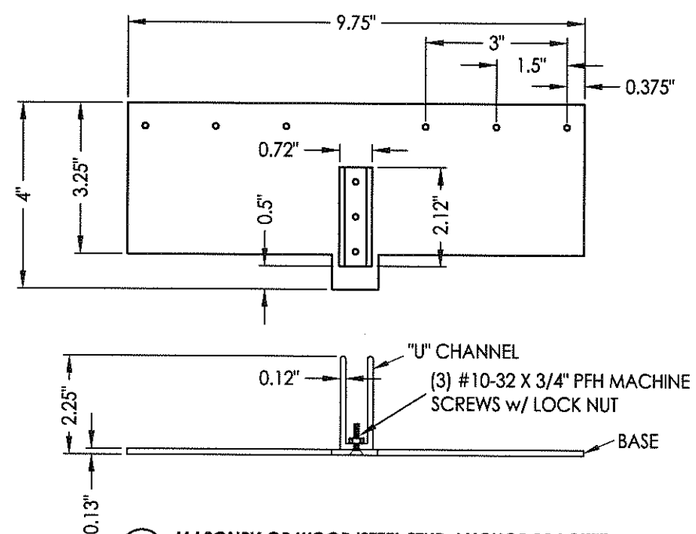

5 MASONRY OR WOOD/STEEL STUD ANCHOR BRACKET
BASE (6061-T6 ALUM.)
"U" CHANNEL (6063-T6 ALUM.)

STATE OF TEXAS
LYNDON F. SCHMIDT
104123
LICENSED PROFESSIONAL ENGINEER
11.26.14

Documents Prepared By: Lyndon F. Schmidt, P.E.
TEXAS P.E. #104123
RW BUILDING CONSULTANTS, INC.
P.O. Box 230 Valrico FL. 33595
Phone No.: 813.859.9197
TEXAS BOARD OF PROFESSIONAL ENGINEERS
CERTIFICATE OF REGISTRATION # F-11852

PRODUCT: ALUMINUM CLIPPED MULLION

PART OR ASSEMBLY: ANCHOR BRACKET DETAILS & CROSS SECTIONS

NO.	DATE	REVISIONS	BY

DATE: 11/25/14
SCALE: N.T.S.
DWG. BY: JK
CHK. BY: LFS
DRAWING NO.: TX-4389
SHEET 5 OF 5

© 2013 R.W. BUILDING CONSULTANTS INC.

R:\A - Projects\Project Folders\Proj 1701 - 1800\PF 1727\D. RWBC Drawings\TX-4386-89.dwg, 5-8