| REVISIONS | | | |
|---|---|---|---|
| REV | DESCRIPTION | DATE | APPROVED |
| A | CHANGED MANUFACTURER'S NAME | 07/03/18 | R.L. |

NOTES:

1) THE PRODUCT SHOWN HEREIN IS DESIGNED AND MANUFACTURED TO COMPLY WITH REQUIREMENTS OF THE 2006 IBC AND 2006 IRC WITH TEXAS STATE MODIFICATIONS AND WITH THE 2009 IBC, 2009 IRC, 2012 IBC, 2012 IRC, 2015 IBC AND 2015 IRC.
2) WOOD FRAMING, STEEL FRAMING AND CONCRETE OPENING TO BE DESIGNED AND ANCHORED TO PROPERLY TRANSFER ALL LOADS TO STRUCTURE. FRAMING AND CONCRETE OPENING IS THE RESPONSIBILITY OF THE ARCHITECT OR ENGINEER OF RECORD.
3) 1X BUCK OVER CONCRETE IS OPTIONAL. WHERE 1X BUCK IS NOT USED DISSIMILAR MATERIALS MUST BE SEPARATED WITH APPROVED COATING OR MEMBRANE. SELECTION OF COATING OR MEMBRANE IS THE RESPONSIBILITY OF THE ARCHITECT OR ENGINEER OF RECORD.
4) ALLOWABLE STRESS INCREASE OF 1/3 WAS NOT USED IN THE DESIGN OF THE PRODUCT SHOWN HEREIN. WIND LOAD DURATION FACTOR Cd=1.6 WAS USED FOR WOOD ANCHOR CALCULATIONS.
5) FRAME MATERIAL: EXTRUDED ALUMINUM 6063–T5 .080" THICK.
6) APPROVED IMPACT PROTECTIVE SYSTEM <u>IS NOT REQUIRED</u> FOR THIS PRODUCT IN WIND BORNE DEBRIS REGIONS.
7) SHIM AS REQUIRED AT EACH INSTALLATION ANCHOR WITH LOAD BEARING SHIM. SHIM WHERE SPACE OF 1/16" OR GREATER OCCURS. MAXIMUM ALLOWABLE SHIM STACK TO BE 1/4".
8) ALL FASTENERS TO BE CORROSION RESISTANT.
9) INSTALLATION ANCHORS SHALL BE INSTALLED IN ACCORDANCE WITH ANCHOR MANUFACTURER'S INSTALLATION INSTRUCTIONS, AND ANCHORS SHALL NOT BE USED IN SUBSTRATES WITH STRENGTHS LESS THAN THE MINIMUM STRENGTH SPECIFIED BELOW:
   A. WOOD – MINIMUM SPECIFIC GRAVITY OF G=0.46
   B. CONCRETE – MINIMUM COMPRESSIVE STRENGTH OF 3,200 PSI.
   C. STEEL – 16GA. (.060") MINIMUM (WELDING INSTALLATION).
   D. STEEL – .1875" MINIMUM (3/8" MACHINE SCREW OR 3/8" BOLT AND NUT INSTALLATION).
   E. STEEL – 14GA. (.078") MINIMUM (5/16" SELF–TAPPING SCREW INSTALLATION).
10) LOUVER TO BE INSTALLED IN LOCATION WHERE ROOM HAS BEEN DESIGNED FOR WATER DRAINAGE.
11) LOUVER MAYBE INSTALLED WITH OR WITHOUT EAD DAMPER. SEE SECTION C SHEET 5.

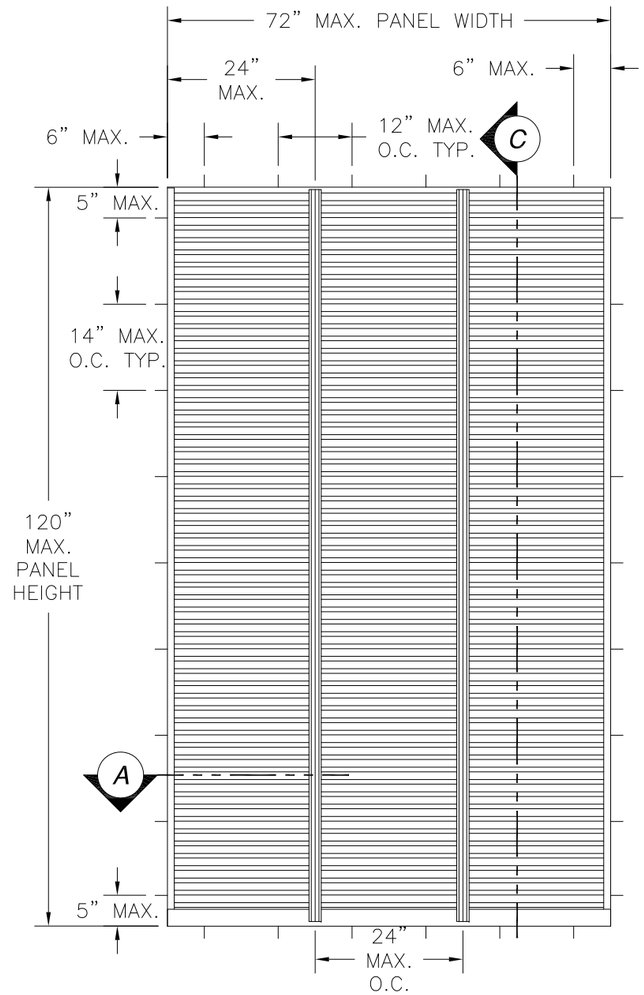


*DC-HWD550 ALUMINUM SINGLE VERTICAL LOUVER*

*INTERIOR VIEW*

| DESIGN PRESSURE RATING | IMPACT RATING |
|---|---|
| ±120PSF | LARGE MISSILE IMPACT |

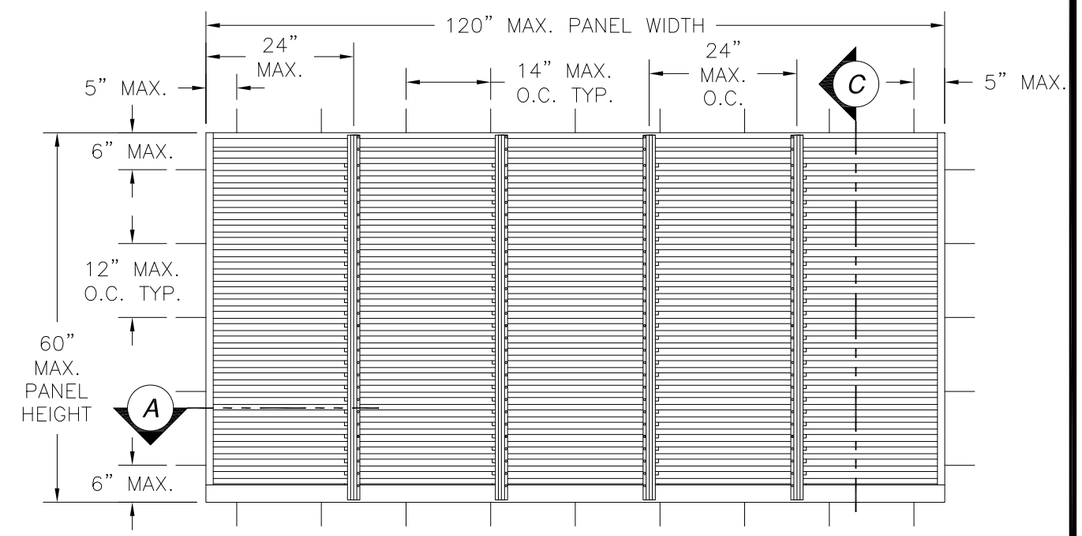


*DC-HWD550 ALUMINUM SINGLE VERTICAL LOUVER*

*INTERIOR VIEW*

| DESIGN PRESSURE RATING | IMPACT RATING |
|---|---|
| ±120PSF | LARGE MISSILE IMPACT |

TABLE OF CONTENTS


| SHEET NO. | DESCRIPTION |
|---|---|
| 1 – 2 | ELEVATION, ANCHORING AND NOTES |
| 3 | BILL OF MATERIALS AND WELDMENT DETAILS |
| 4 – 5 | CROSS SECTIONS |
| 6 – 9 | INSTALLATION DETAILS |
| 10 – 11 | COMPONENTS |


SIGNED: 07/03/2018


AIRE TECHNOLOGIES, INC.
1502 INDUSTRIAL DRIVE
E. MONONGAHELA, PA 15063


DC–HWD550 ALUMINUM VERTICAL LOUVER
MULLED & SINGLE UNITS – LARGE MISSILE IMPACT
SINGLE ELEVATIONS, ANCHORING AND NOTES

| DRAWN: | DWG NO. | REV |
|---|---|---|
| TJH | 08–01060 | A |

| SCALE | DATE | SHEET |
|---|---|---|
| NTS | 08/23/10 | 1 OF 11 |


*L. ROBERTO LOMAS P.E.*
*1432 WOODFORD RD LEWISVILLE, NC 27023*
*434-688-0609 rllomas@lrlomaspe.com*

Luis R. Lomas P.E.
TX No.: 101889

| REVISIONS | | | |
|---|---|---|---|
| REV | DESCRIPTION | DATE | APPROVED |
| A | CHANGED MANUFACTURER'S NAME | 07/03/18 | R.L. |

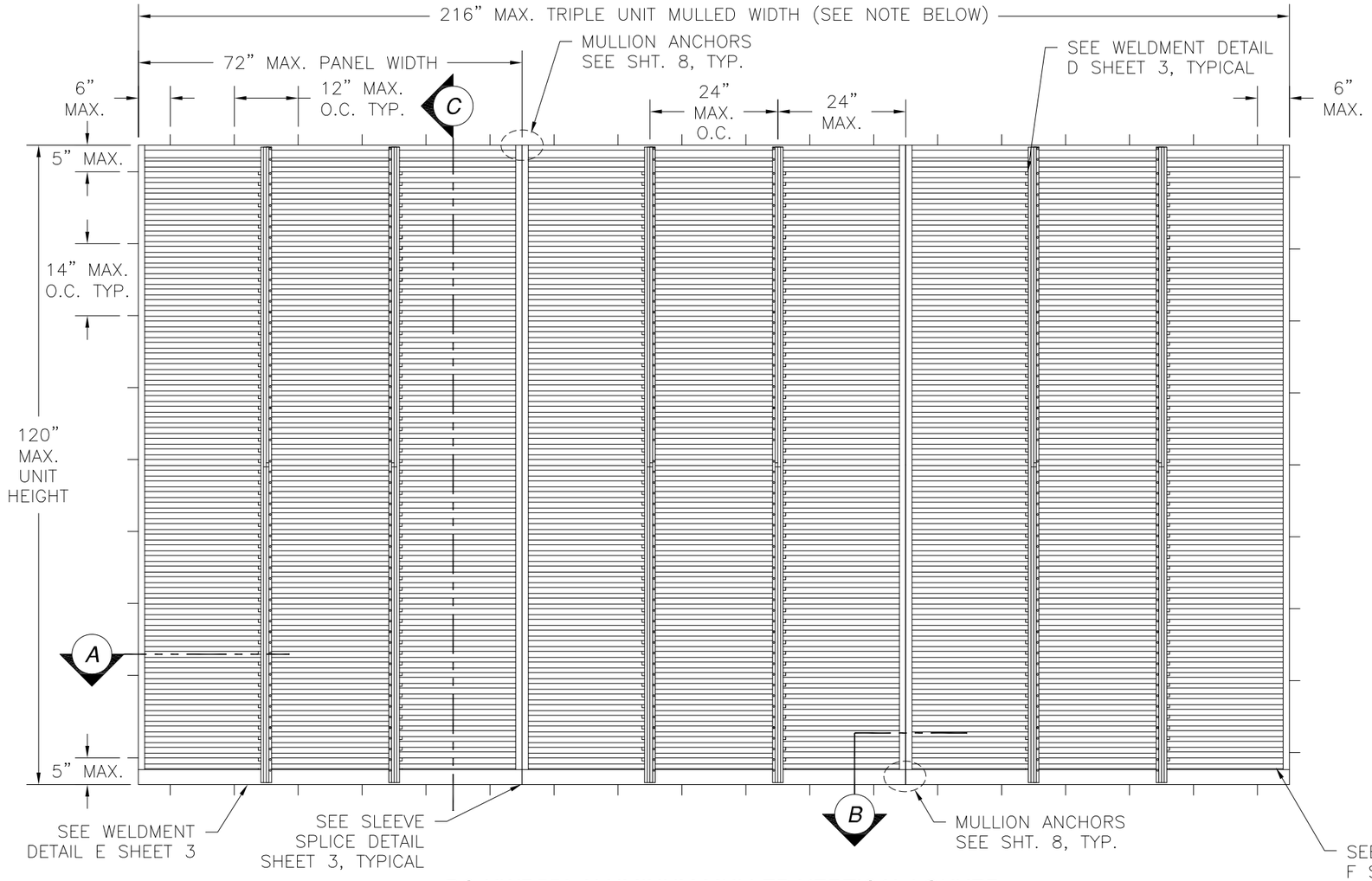


## *DC-HWD550 ALUMINUM MULLED VERTICAL LOUVER*

*INTERIOR VIEW*

*3 PANEL MULLED UNIT SHOWN, UNLIMITED MULTIPLES ARE APPROVED AS LONG AS SINGLE PANEL DOES NOT EXCEED SINGLE PANEL SIZE SHOWN IN ELEVATIONS.*
*UNITS MAY BE MULLED AS 72" x 120" OR AS 120" x 72"*

| *DESIGN PRESSURE RATING* | *IMPACT RATING* |
|---|---|
| *±120PSF* | *LARGE MISSILE IMPACT* |

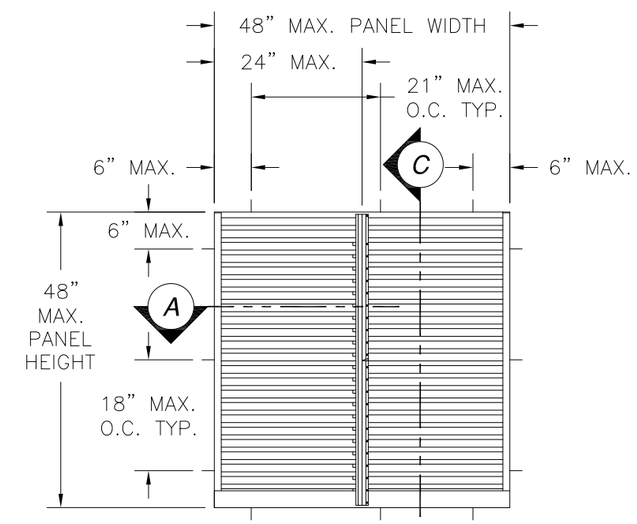


## *DC-HWD550 ALUMINUM SINGLE VERTICAL LOUVER*

*INTERIOR VIEW*

| *DESIGN PRESSURE RATING* | *IMPACT RATING* |
|---|---|
| *±180PSF* | *LARGE MISSILE IMPACT* |

*SIGNED: 07/03/2018*

AIRE TECHNOLOGIES, INC.
1502 INDUSTRIAL DRIVE
E. MONONGAHELA, PA 15063

DC–HWD550 ALUMINUM VERTICAL LOUVER
MULLED & SINGLE UNITS – LARGE MISSILE IMPACT
MULLED AND SINGLE ELEVATIONS

| DRAWN: | DWG NO. | REV |
|---|---|---|
| TJH | 08–01060 | A |

| SCALE | DATE | SHEET |
|---|---|---|
| NTS | 08/23/10 | 2 OF 11 |


*L. ROBERTO LOMAS P.E.*
*1432 WOODFORD RD LEWISVILLE, NC 27023*
*434-688-0609 rllomas@lrlomaspe.com*


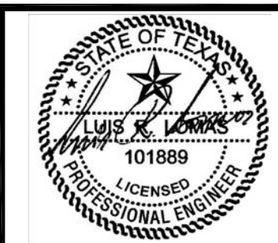


Luis R. Lomas P.E.
TX No.: 101889

| BILL OF MATERIALS | | | | |
|---|---|---|---|---|
| ITEM NO.: | PART NUMBER | DESCRIPTION | MANUFACTURER | MATERIAL |
| 1 | HWD550H | HWD550 HEAD | AIRE TECHNOLOGIES, INC. | ALUMINUM 6063-T5 |
| 2 | HWD550B0 | HWD550 BOTTOM | AIRE TECHNOLOGIES, INC. | ALUMINUM 6063-T5 |
| 3 | HWD550J | HWD550 JAMB | AIRE TECHNOLOGIES, INC. | ALUMINUM 6063-T5 |
| 4 | HWD550B | HWD550 BLADE | AIRE TECHNOLOGIES, INC. | ALUMINUM 6063-T5 |
| 5 | HWD550BS | HWD550 BLADE SUPPORT | AIRE TECHNOLOGIES, INC. | ALUMINUM 6063-T5 |
| 6 | | VERTICAL BLADE SUPPORT | AIRE TECHNOLOGIES, INC. | ALUMINUM 6063-T5 |
| 7 | | INSTALLATION SLEEVE | AIRE TECHNOLOGIES, INC. | ALUMINUM 3003 |
| 8 | | 2" X 2" X 3/16" INSTALLATION ANGLE | AIRE TECHNOLOGIES, INC. | ALUMINUM 6063-T5 |
| 9 | | 2" X 4" X 1/4" MULLION ANGLE | AIRE TECHNOLOGIES, INC. | ALUMINUM 6063-T5 |
| 10 | C4X5.4 | MULLION C-CHANNEL | AIRE TECHNOLOGIES, INC. | A36 STEEL |
| 11 | | 2" X 4" X 1/4" X 3 1/2" CLIP | AIRE TECHNOLOGIES, INC. | ALUMINUM 6063-T5 |
| 12 | | #8 X 3/4" TEK SCREW | | |
| 13 | | #12 X 1" TEK SCREW | | |
| 14 | | 1/2-13 X 1 1/2" HH BOLT | | |
| 15 | | 1/2-13 NUT | | |
| 16 | | #10 X 3/4" TEK | | |
| 17 | | 2" X 2" X 3/16" CONTINUOUS ANGLE | AIRE TECHNOLOGIES, INC. | ALUMINUM 6063-T5 |
| 18 | | EAD DAMPER BLADE | AIRE TECHNOLOGIES, INC. | ALUMINUM 6063-T5 |
| 19 | | HAND QUADRANT | AIRE TECHNOLOGIES, INC. | ALUMINUM 6063-T5 |
| 20 | | #14 X 7/8" TEK SCREW | | |
| 21 | | EAD DAMPER HAT CHANNEL | AIRE TECHNOLOGIES, INC. | ALUMINUM 6063-T5 |
| 22 | | EAD DAMPER BLADE STOP | AIRE TECHNOLOGIES, INC. | ALUMINUM 6063-T5 |

| REVISIONS | | | |
|---|---|---|---|
| REV | DESCRIPTION | DATE | APPROVED |
| A | CHANGED MANUFACTURER'S NAME | 07/03/18 | R.L. |

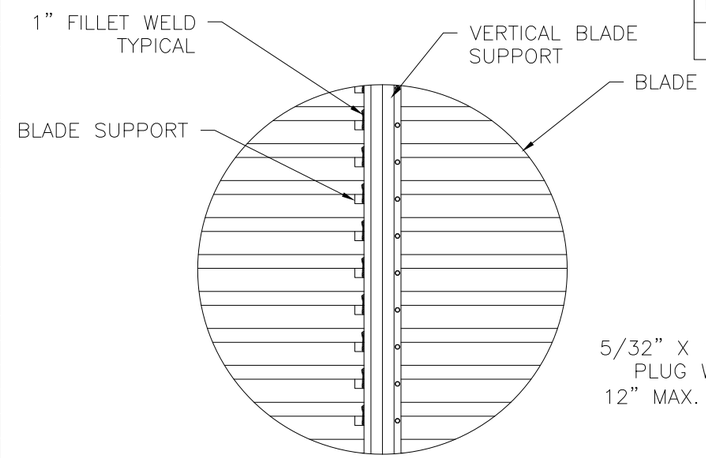


**WELDMENT DETAIL D**
*BLADE TO BLADE SUPPORT*

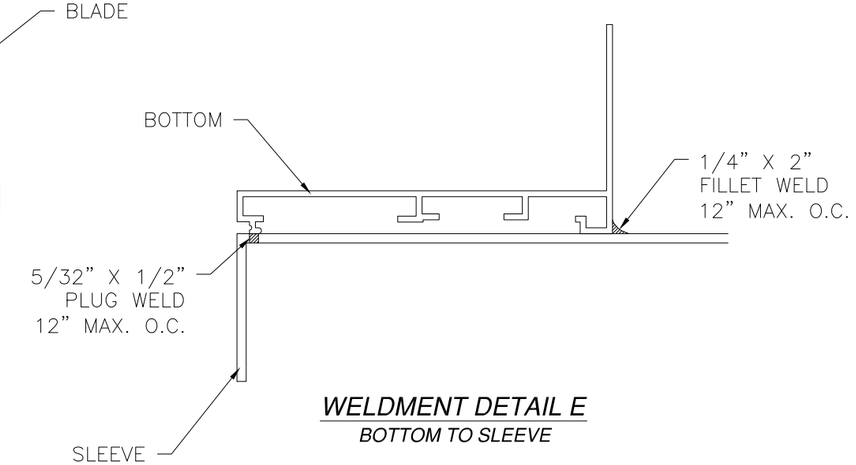


**WELDMENT DETAIL E**
*BOTTOM TO SLEEVE*

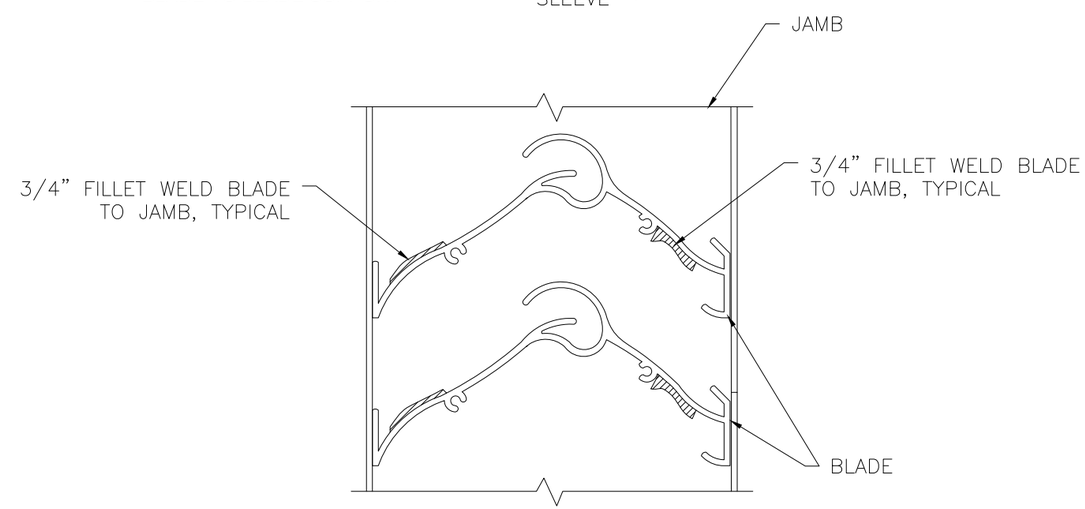


**WELDMENT DETAIL F**
*BLADE TO JAMB*

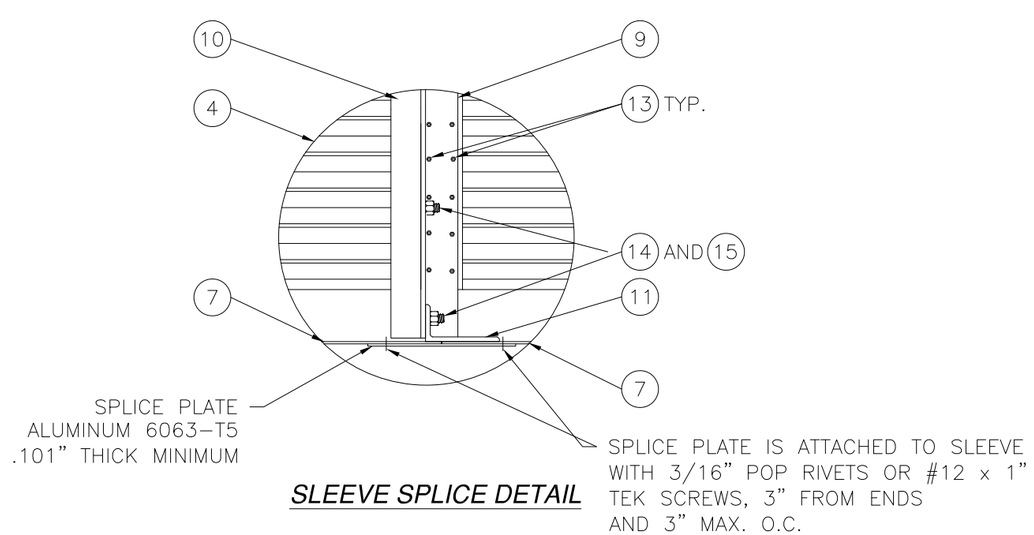


**SLEEVE SPLICE DETAIL**

*SIGNED: 07/03/2018*

AIRE TECHNOLOGIES, INC.
1502 INDUSTRIAL DRIVE
E. MONONGAHELA, PA 15063

DC-HWD550 ALUMINUM VERTICAL LOUVER
MULLED & SINGLE UNITS – LARGE MISSILE IMPACT
BILL OF MATERIALS AND WELDMENT DETAILS

| DRAWN: | DWG NO. | REV |
|---|---|---|
| TJH | 08-01060 | A |

| SCALE | DATE | SHEET |
|---|---|---|
| NTS | 08/23/10 | 3 OF 11 |


*L. ROBERTO LOMAS P.E.*
*1432 WOODFORD RD LEWISVILLE, NC 27023*
*434-688-0609 rllomas@lrlomaspe.com*


STATE OF TEXAS
LUIS R. LOMAS
101889
LICENSED
PROFESSIONAL ENGINEER

Luis R. Lomas P.E.
TX No.: 101889

| REVISIONS | | | |
|---|---|---|---|
| REV | DESCRIPTION | DATE | APPROVED |
| A | CHANGED MANUFACTURER'S NAME | 07/03/18 | R.L. |

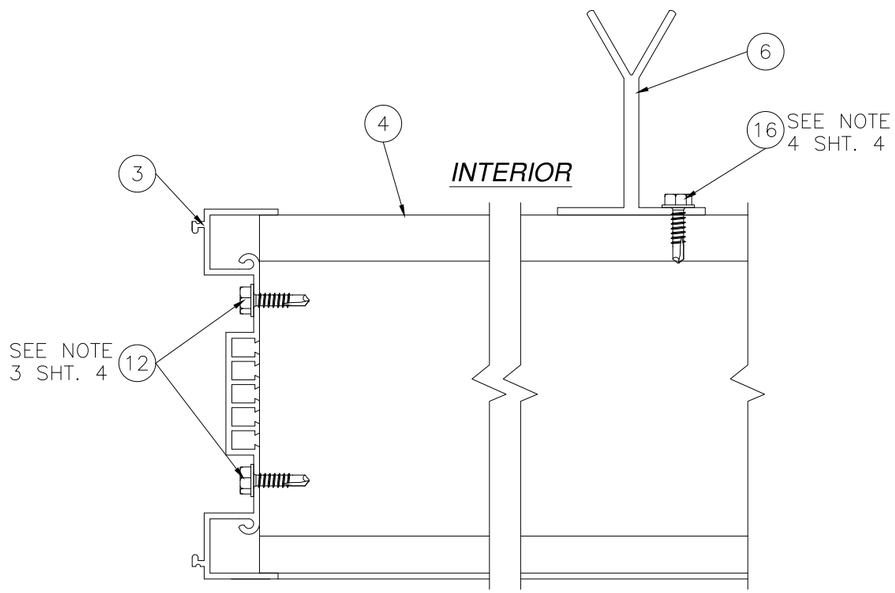


A HORIZONTAL CROSS SECTION

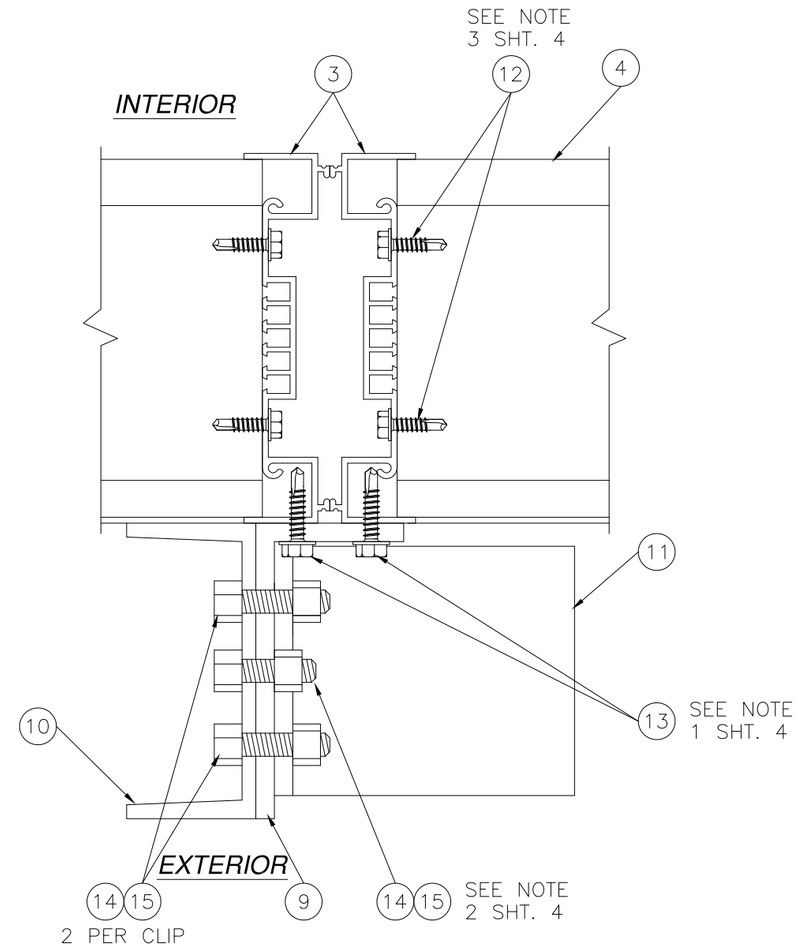


B HORIZONTAL CROSS SECTION

SIGNED: 07/03/2018

NOTES:

1) LOCATE #12 x 1" TEK SCREW 6" FROM ENDS AND 6" MAXIMUM O.C. THEREAFTER.
2) LOCATE 1/2" BOLT AND NUT 6" FROM ENDS AND 12" MAXIMUM O.C. THEREAFTER.
3) INSTALL (2) #8 x 3/4" TEK SCREW PER BLADE LOCATION.
4) LOCATE #10 x 3/4" TEK SCREW ATTACHING VERTICAL BLADE SUPPORT TO UNIT 2" FROM ENDS AND 2" MAX. O.C. THEREAFTER.

AIRE TECHNOLOGIES, INC.
1502 INDUSTRIAL DRIVE
E. MONONGAHELA, PA 15063

DC-HWD550 ALUMINUM VERTICAL LOUVER
MULLED & SINGLE UNITS - LARGE MISSILE IMPACT
CROSS SECTIONS

| DRAWN: | DWG NO. | REV |
|---|---|---|
| TJH | 08-01060 | A |

| SCALE | DATE | SHEET |
|---|---|---|
| NTS | 08/23/10 | 4 OF 11 |


L. ROBERTO LOMAS P.E.
1432 WOODFORD RD LEWISVILLE, NC 27023
434-688-0609 rllomas@lrlomaspe.com


STATE OF TEXAS
LUIS R. LOMAS
101889
LICENSED
PROFESSIONAL ENGINEER

Luis R. Lomas P.E.
TX No.: 101889

| REVISIONS | | | |
|---|---|---|---|
| REV | DESCRIPTION | DATE | APPROVED |
| A | CHANGED MANUFACTURER'S NAME | 07/03/18 | R.L. |

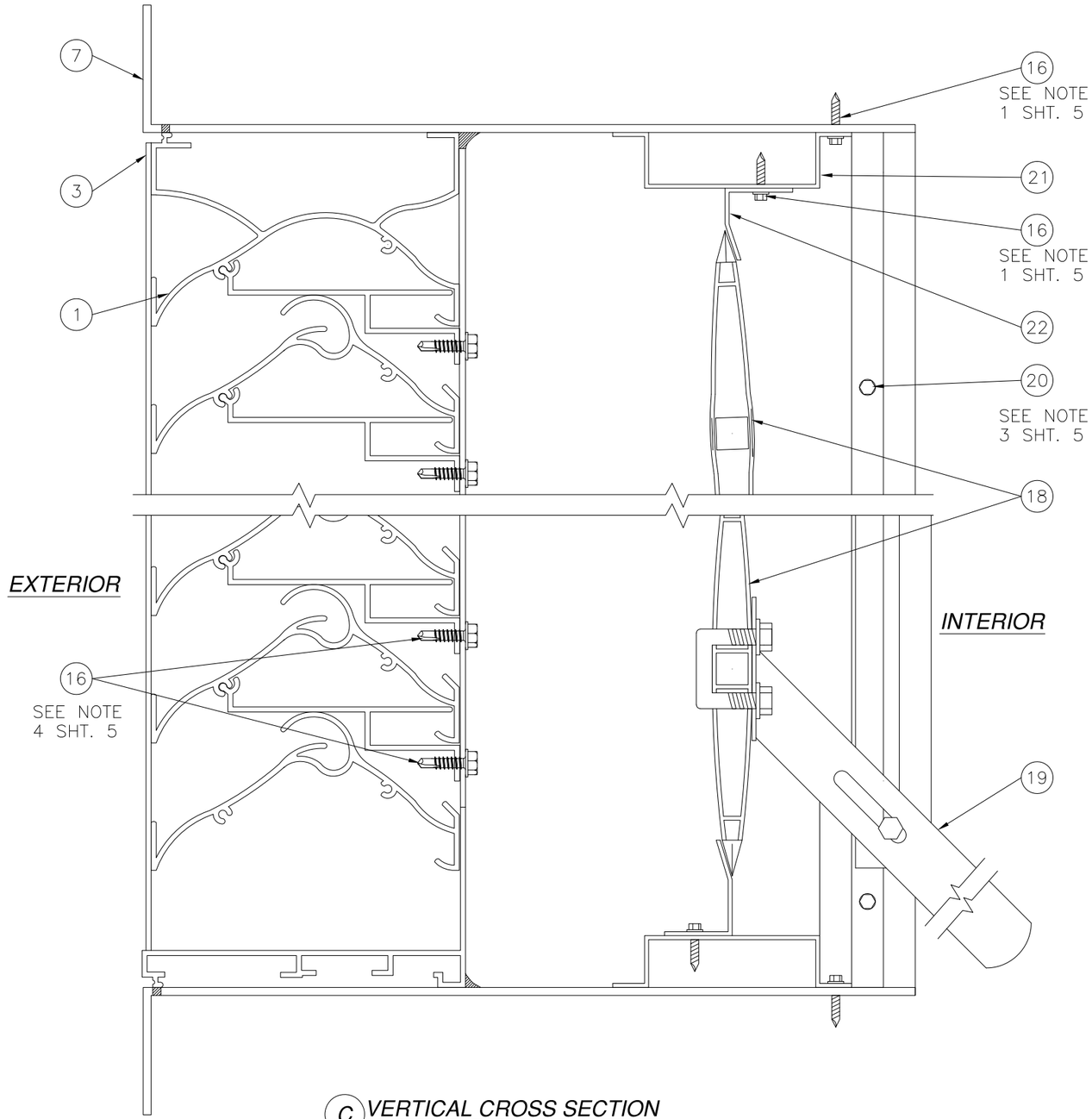


C VERTICAL CROSS SECTION
WITH SLEEVE AND EAD DAMPER

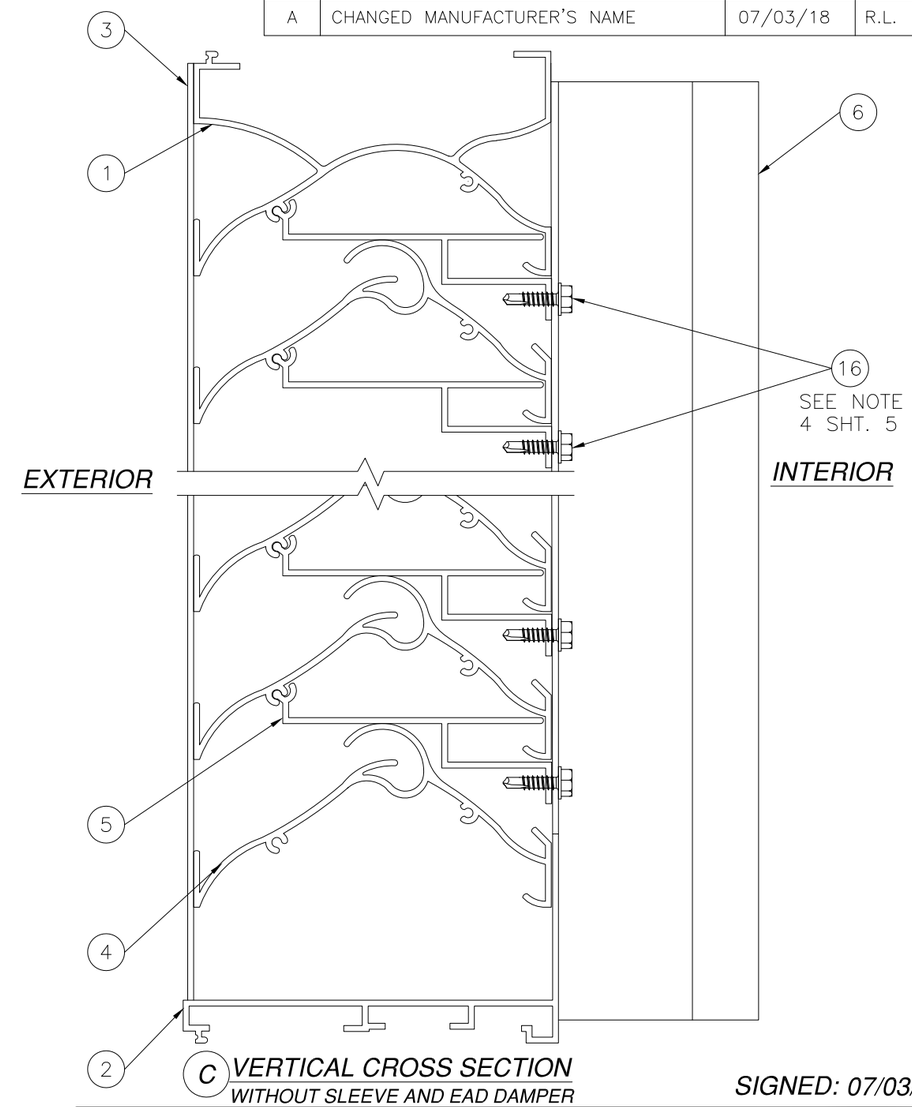


C VERTICAL CROSS SECTION
WITHOUT SLEEVE AND EAD DAMPER

SIGNED: 07/03/2018

NOTES:
1) EAD DAMPER BLADE STOP IS ATTACHED TO HAT CHANNEL WITH #10 x 3/4" TEK SCREWS SPACED 12" MAX. O.C.
2) HAT CHANNEL IS ATTACHED TO INSTALLATION SLEEVE WITH #10 x 3/4" TEK SCREWS SPACED 12" MAX. O.C.
3) #14 IS SPACED 12" FROM ENDS AND 12" MAX. O.C. THEREAFTER.
4) LOCATE #10 x 3/4" TEK SCREW ATTACHING VERTICAL BLADE SUPPORT TO UNIT 2" FROM ENDS AND 2" MAX. O.C. THEREAFTER.

AIRE TECHNOLOGIES, INC.
1502 INDUSTRIAL DRIVE
E. MONONGAHELA, PA 15063

DC-HWD550 ALUMINUM VERTICAL LOUVER
MULLED & SINGLE UNITS - LARGE MISSILE IMPACT
CROSS SECTIONS

| DRAWN: | DWG NO. | REV |
|---|---|---|
| TJH | 08-01060 | A |

| SCALE | DATE | SHEET |
|---|---|---|
| NTS | 08/23/10 | 5 OF 11 |


L. ROBERTO LOMAS P.E.
1432 WOODFORD RD LEWISVILLE, NC 27023
434-688-0609 rllomas@lrlomaspe.com

Luis R. Lomas P.E.
TX No.: 101889

| REVISIONS | | | |
|---|---|---|---|
| REV | DESCRIPTION | DATE | APPROVED |
| A | CHANGED MANUFACTURER'S NAME | 07/03/18 | R.L. |

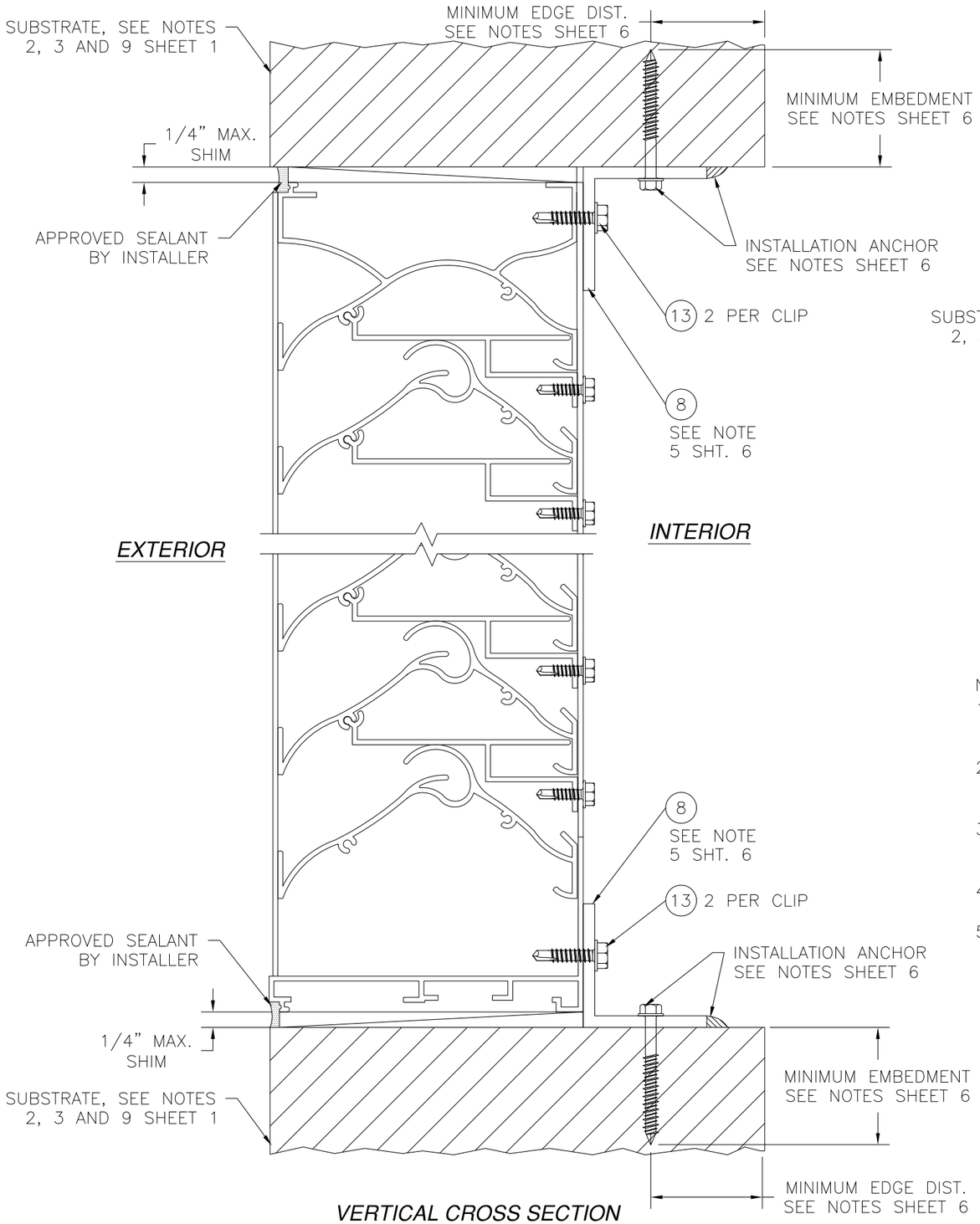


*VERTICAL CROSS SECTION*
*550-1 MOUNTING*
*2X BUCK/WOOD FRAMING INSTALLATION*

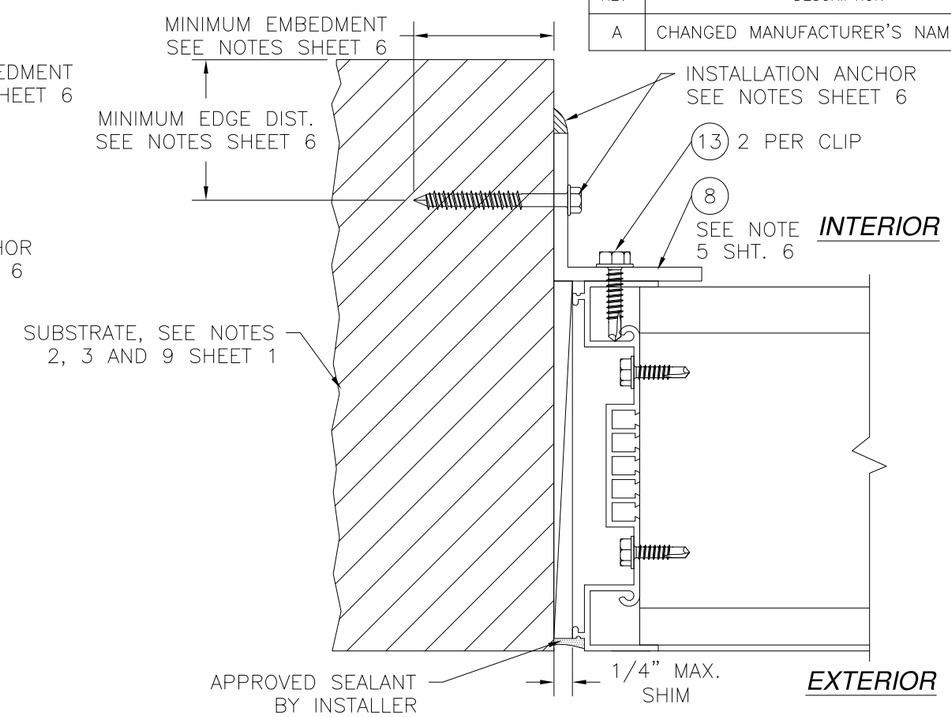


*HORIZONTAL CROSS SECTION 550-1 MOUNTING*
*2X BUCK/WOOD FRAMING INSTALLATION*

NOTES:

1) FOR ANCHORING CLIP INTO CONCRETE USE 5/16" ITW TAPCON WITH SUFFICIENT LENGTH TO ACHIEVE A 1 3/4" MINIMUM EMBEDMENT INTO SUBSTRATE WITH 2 3/16" MINIMUM EDGE DISTANCE. LOCATE ANCHORS AS SHOWN IN ELEVATIONS AND INSTALLATION DETAILS.
2) FOR ANCHORING CLIP INTO WOOD FRAMING OR 2X BUCK USE 5/16" LAG SCREW SCREW WITH SUFFICIENT LENGTH TO ACHIEVE A 1 5/16" MINIMUM EMBEDMENT INTO SUBSTRATE. LOCATE ANCHORS AS SHOWN IN ELEVATIONS AND INSTALLATION DETAILS.
3) FOR ANCHORING INTO 14GA. (.078" MIN.) STEEL FRAMING USE 5/16" DIAMETER SELF-TAPPING SCREW WITH SUFFICIENT LENGTH TO ACHIEVE 3-THREAD PITCH MINIMUM BEYOND THE SUBSTRATE. LOCATE ANCHORS AS SHOWN IN ELEVATIONS AND INSTALLATION DETAILS.
4) FOR WELDING TO 16GA. (.060" MIN.) STEEL FRAMING USE (2) 1/4" x 1 1/2" FILLET WELDS. LOCATE WELDS AS SHOWN IN ELEVATIONS AND INSTALLATION DETAILS.
5) FOR ANCHOR SCREWS USE ITEM #8. FOR WELDING INSTALLATION USE 2" x 2" x 1/8" x 2"LONG A36 STEEL CLIP.

*SIGNED: 07/03/2018*

AIRE TECHNOLOGIES, INC.
1502 INDUSTRIAL DRIVE
E. MONONGAHELA, PA 15063

DC-HWD550 ALUMINUM VERTICAL LOUVER
MULLED & SINGLE UNITS - LARGE MISSILE IMPACT
INSTALLATION DETAILS - 550-1 MOUNTING

| DRAWN: | DWG NO. | REV |
|---|---|---|
| TJH | 08-01060 | A |
| SCALE NTS | DATE 08/23/10 | SHEET 6 OF 11 |


*L. ROBERTO LOMAS P.E.*
*1432 WOODFORD RD LEWISVILLE, NC 27023*
*434-688-0609 rllomas@lrlomaspe.com*


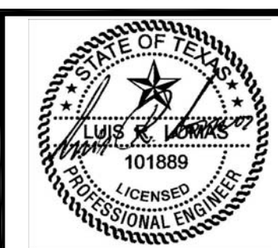


Luis R. Lomas P.E.
TX No.: 101889

| REVISIONS | | | |
|---|---|---|---|
| REV | DESCRIPTION | DATE | APPROVED |
| A | CHANGED MANUFACTURER'S NAME | 07/03/18 | R.L. |

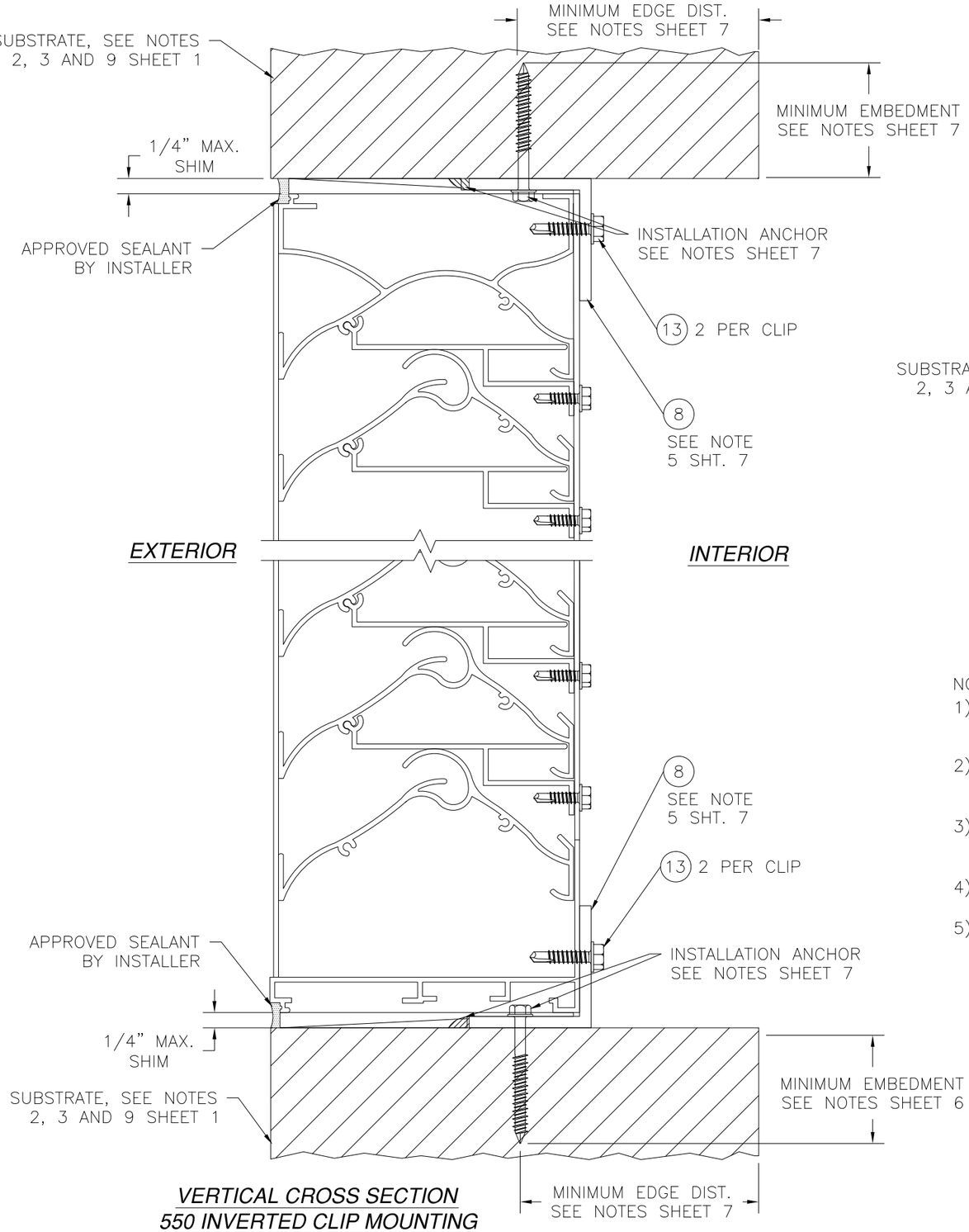


*VERTICAL CROSS SECTION*
*550 INVERTED CLIP MOUNTING*
*2X BUCK/WOOD FRAMING INSTALLATION*

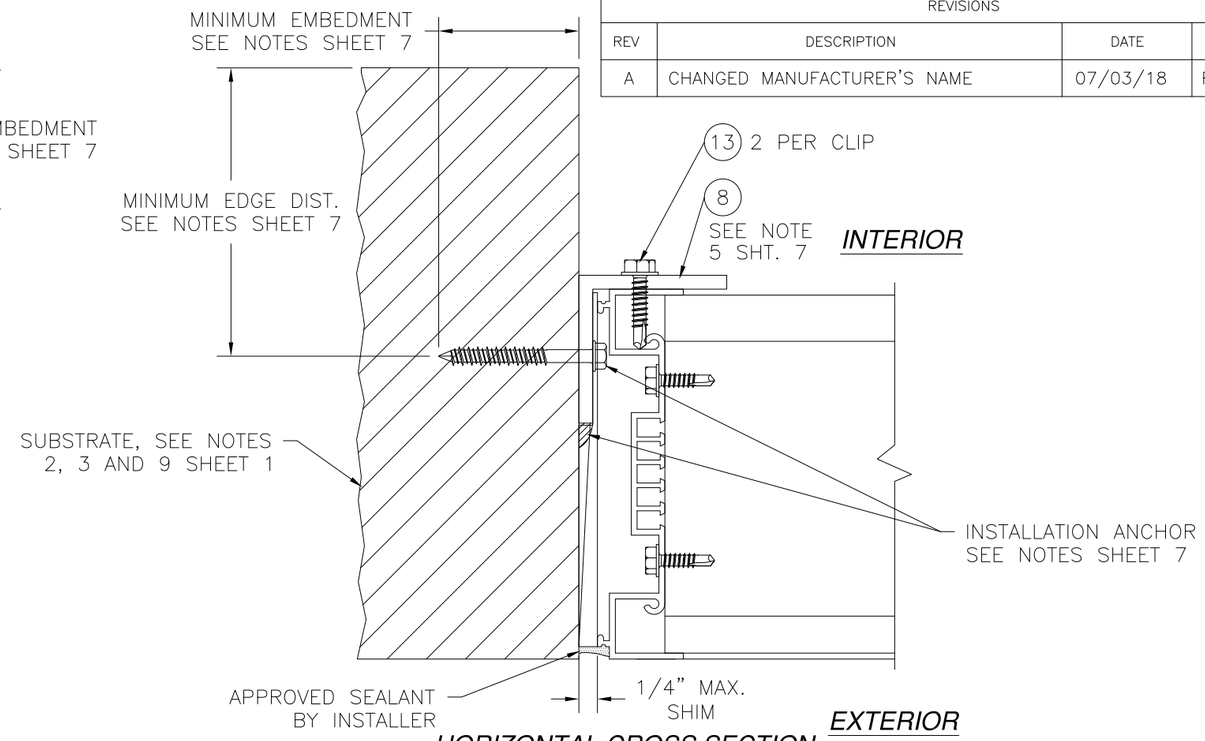


*HORIZONTAL CROSS SECTION*
*550 INVERTED CLIP MOUNTING*
*2X BUCK/WOOD FRAMING INSTALLATION*

NOTES:

1) FOR ANCHORING CLIP INTO CONCRETE USE 5/16" ITW TAPCON WITH SUFFICIENT LENGTH TO ACHIEVE A 1 3/4" MINIMUM EMBEDMENT INTO SUBSTRATE WITH 2 3/16" MINIMUM EDGE DISTANCE. LOCATE ANCHORS AS SHOWN IN ELEVATIONS AND INSTALLATION DETAILS.
2) FOR ANCHORING CLIP INTO WOOD FRAMING OR 2X BUCK USE 5/16" LAG SCREW SCREW WITH SUFFICIENT LENGTH TO ACHIEVE A 1 5/16" MINIMUM EMBEDMENT INTO SUBSTRATE. LOCATE ANCHORS AS SHOWN IN ELEVATIONS AND INSTALLATION DETAILS.
3) FOR ANCHORING INTO 14GA. (.078" MIN.) STEEL FRAMING USE 5/16" DIAMETER SELF–TAPPING SCREW WITH SUFFICIENT LENGTH TO ACHIEVE 3–THREAD PITCH MINIMUM BEYOND THE SUBSTRATE. LOCATE ANCHORS AS SHOWN IN ELEVATIONS AND INSTALLATION DETAILS.
4) FOR WELDING TO 16GA. (.060" MIN.) STEEL FRAMING USE (2) 1/4" x 1 1/2" FILLET WELDS. LOCATE WELDS AS SHOWN IN ELEVATIONS AND INSTALLATION DETAILS.
5) FOR ANCHOR SCREWS USE ITEM #8. FOR WELDING INSTALLATION USE 2" x 2" x 1/8" x 2"LONG A36 STEEL CLIP.

*SIGNED: 07/03/2018*

AIRE TECHNOLOGIES, INC.
1502 INDUSTRIAL DRIVE
E. MONONGAHELA, PA 15063

DC–HWD550 ALUMINUM VERTICAL LOUVER
MULLED & SINGLE UNITS – LARGE MISSILE IMPACT
INSTALLATION DETAILS – INVERTED CLIP MOUNTING

| DRAWN: | DWG NO. | REV |
|---|---|---|
| TJH | 08–01060 | A |

| SCALE | DATE | SHEET |
|---|---|---|
| NTS | 08/23/10 | 7 OF 11 |


*L. ROBERTO LOMAS P.E.*
*1432 WOODFORD RD LEWISVILLE, NC 27023*
*434-688-0609 rllomas@lrlomaspe.com*


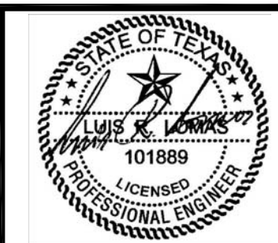


Luis R. Lomas P.E.
TX No.: 101889

| REVISIONS | | | |
|---|---|---|---|
| REV | DESCRIPTION | DATE | APPROVED |
| A | CHANGED MANUFACTURER'S NAME | 07/03/18 | R.L. |

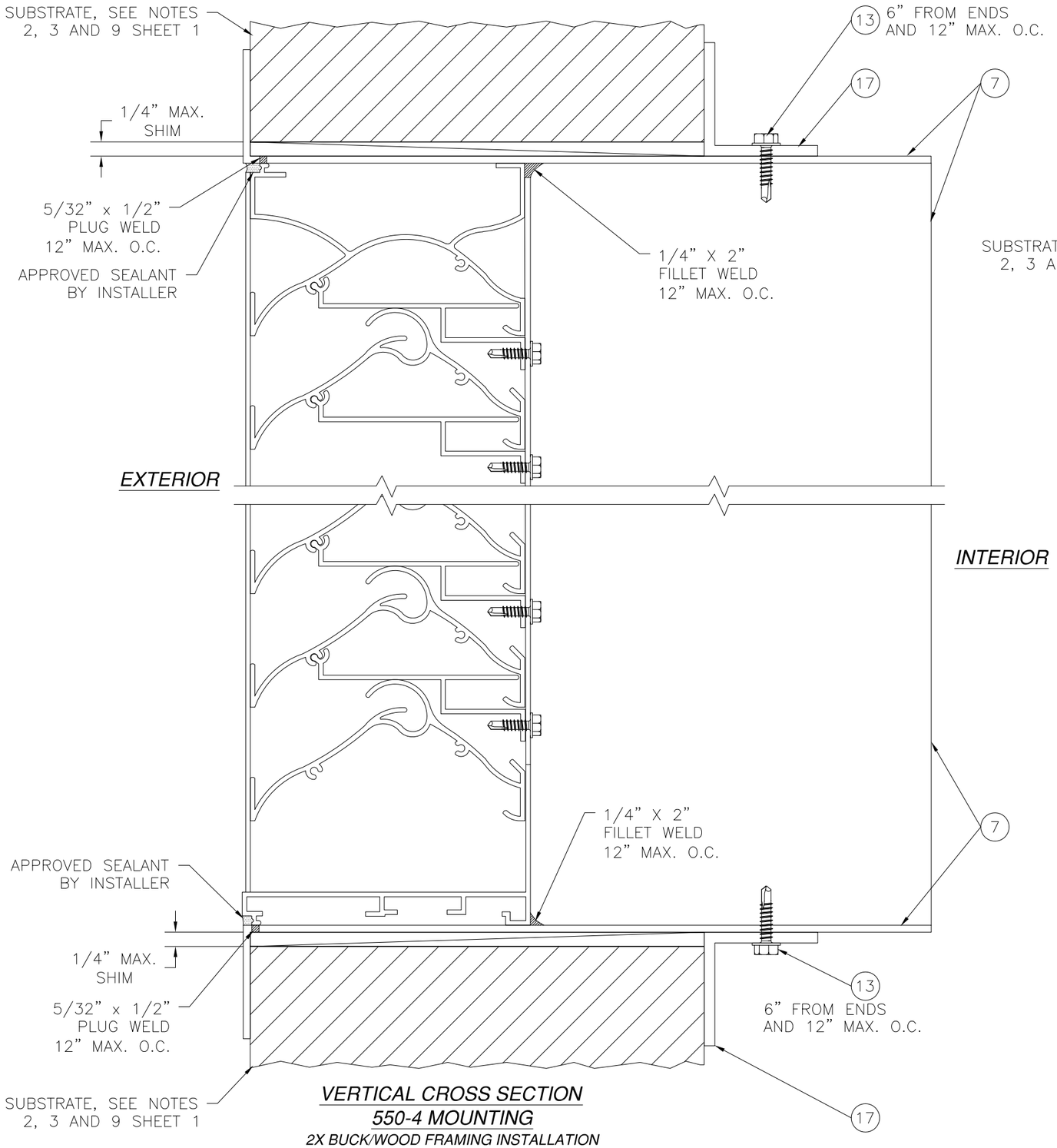


VERTICAL CROSS SECTION
550-4 MOUNTING
2X BUCK/WOOD FRAMING INSTALLATION

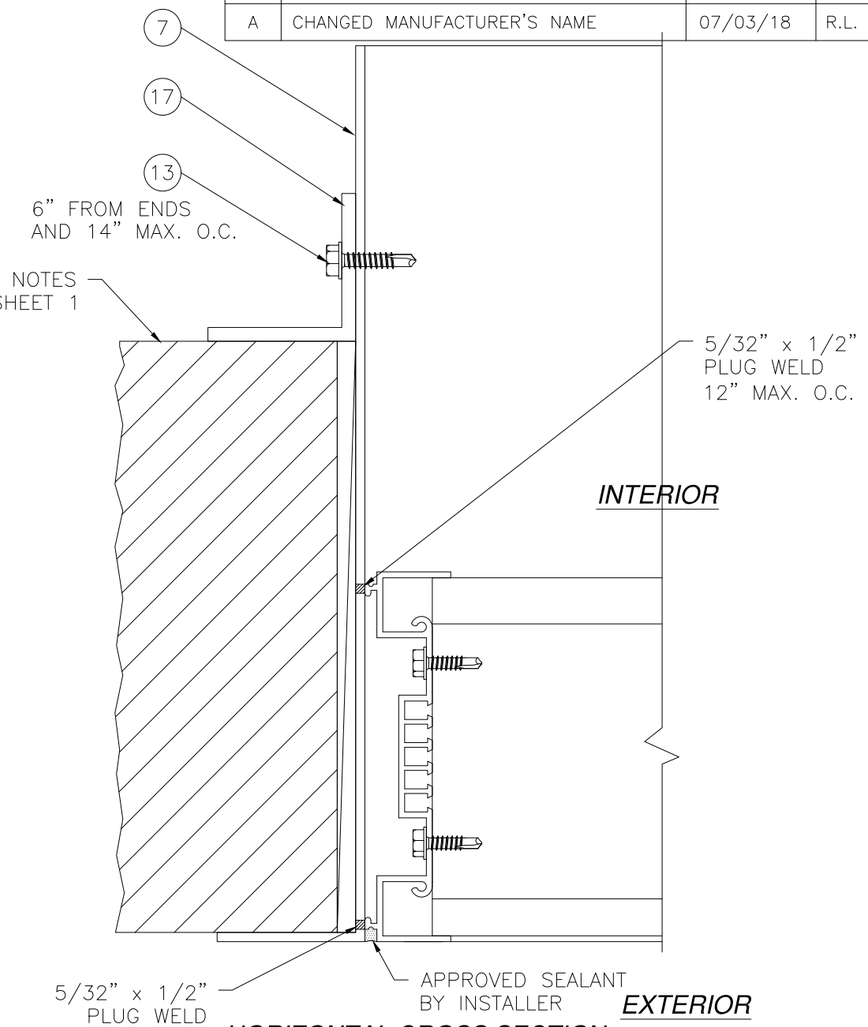


HORIZONTAL CROSS SECTION
550-4 MOUNTING
2X BUCK/WOOD FRAMING INSTALLATION

SIGNED: 07/03/2018

AIRE TECHNOLOGIES, INC.
1502 INDUSTRIAL DRIVE
E. MONONGAHELA, PA 15063

DC-HWD550 ALUMINUM VERTICAL LOUVER
MULLED & SINGLE UNITS - LARGE MISSILE IMPACT
INSTALLATION DETAILS - 550-4 MOUNTING

| DRAWN: | DWG NO. | REV |
|---|---|---|
| TJH | 08-01060 | A |

| SCALE | DATE | SHEET |
|---|---|---|
| NTS | 08/23/10 | 8 OF 11 |


L. ROBERTO LOMAS P.E.
1432 WOODFORD RD LEWISVILLE, NC 27023
434-688-0609 rllomas@lrlomaspe.com


STATE OF TEXAS
LUIS R. LOMAS
101889
LICENSED
PROFESSIONAL ENGINEER

Luis R. Lomas P.E.
TX No.: 101889

| REVISIONS | | | |
|---|---|---|---|
| REV | DESCRIPTION | DATE | APPROVED |
| A | CHANGED MANUFACTURER'S NAME | 07/03/18 | R.L. |

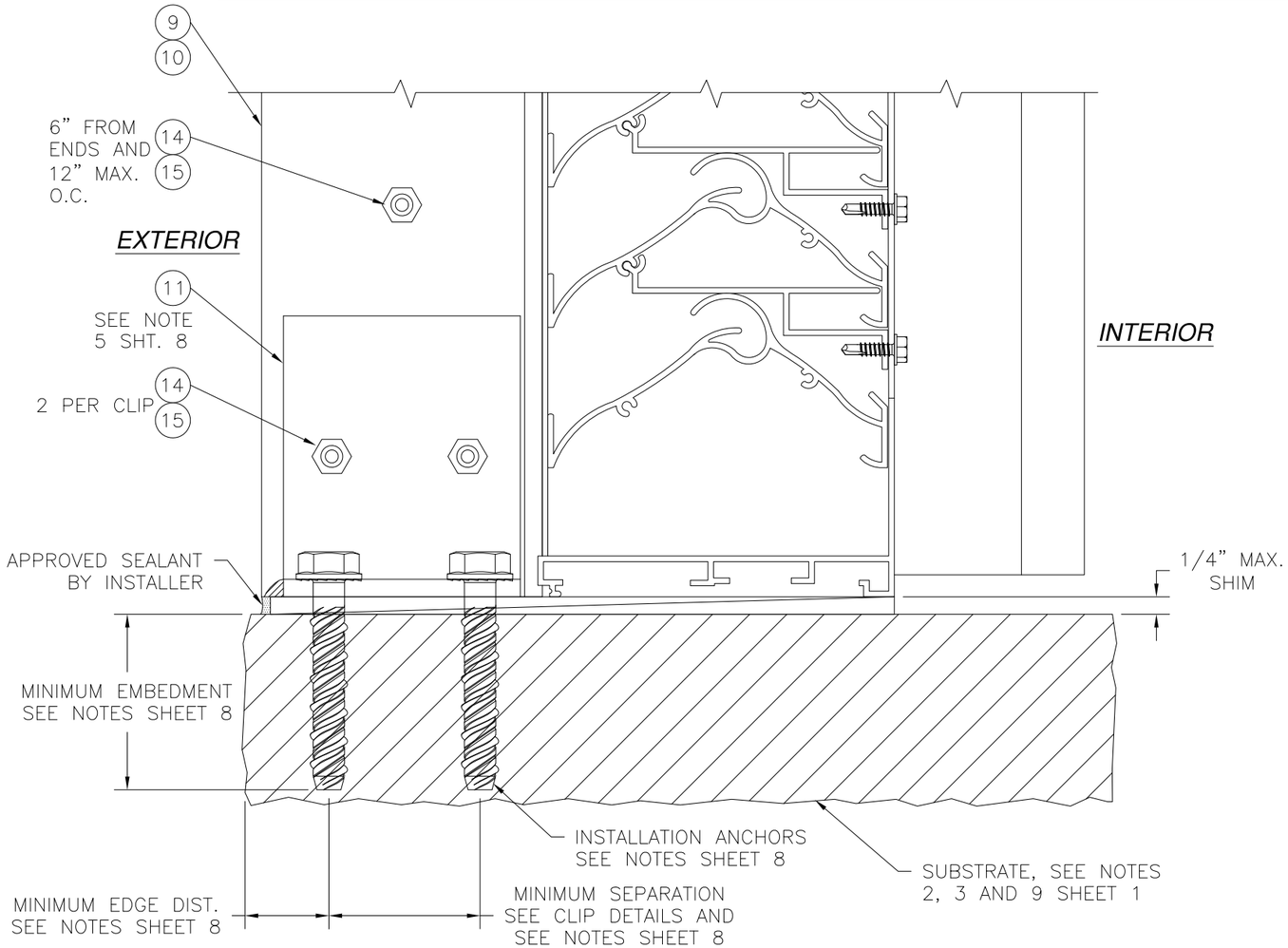


*VERTICAL MULLION DETAIL*

*BOTTOM SHOWN, HEAD SIMILAR*

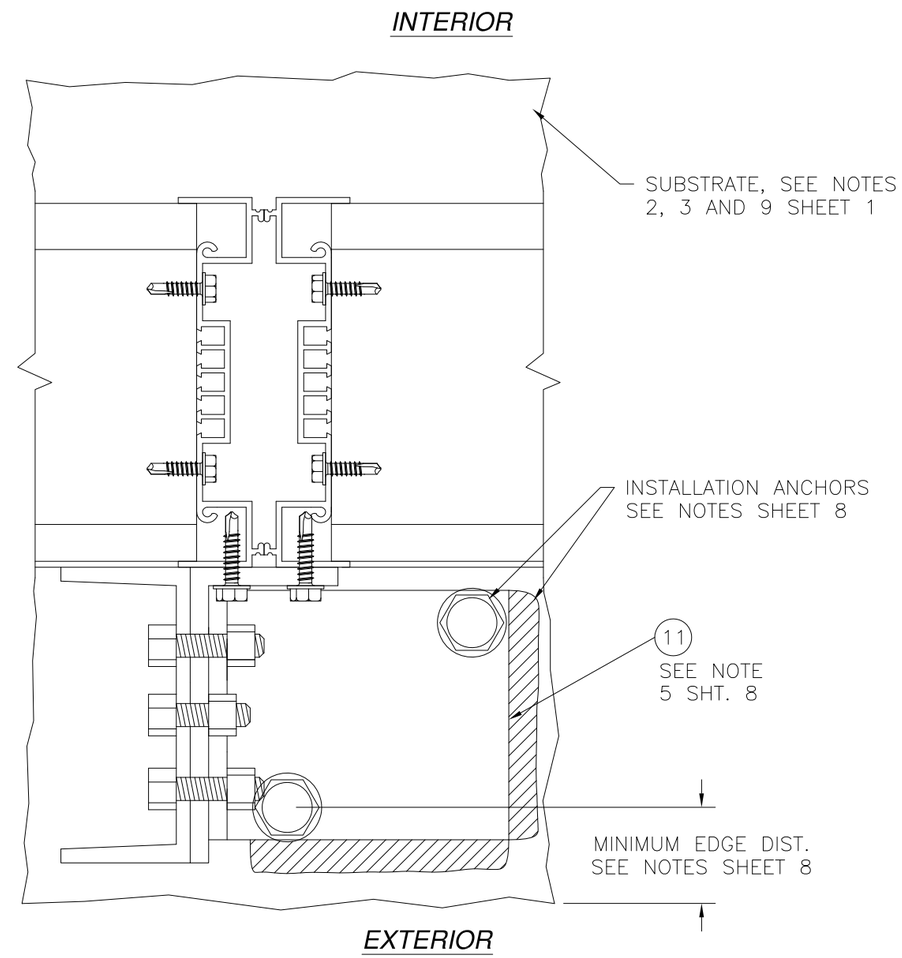


*HORIZONTAL MULLION DETAIL*

*BOTTOM SHOWN, HEAD SIMILAR*

NOTES:

1) FOR ANCHORING CLIP INTO CONCRETE USE 1/2" WEDGE BOLT ANCHOR WITH SUFFICIENT LENGTH TO ACHIEVE A 2 1/2" MINIMUM EMBEDMENT INTO SUBSTRATE WITH 5" MINIMUM EDGE DISTANCE AND 2" MINIMUM SEPARATION. LOCATE ANCHORS AS SHOWN IN ELEVATIONS AND INSTALLATION DETAILS.
2) FOR ANCHORING CLIP INTO WOOD FRAMING OR 2X BUCK USE 1/2" LAG SCREW SCREW WITH SUFFICIENT LENGTH TO ACHIEVE A 2 1/2" MINIMUM EMBEDMENT INTO SUBSTRATE. LOCATE ANCHORS AS SHOWN IN ELEVATIONS AND INSTALLATION DETAILS.
3) FOR ANCHORING CLIP INTO 3/16" MINIMUM STEEL FRAMING USE 3/8" DIAMETER SELF-TAPPING SCREW WITH SUFFICIENT LENGTH TO ACHIEVE 3-THREAD PITCH MINIMUM BEYOND THE SUBSTRATE. LOCATE ANCHORS AS SHOWN IN ELEVATIONS AND INSTALLATION DETAILS.
4) FOR ANCHORING CLIP INTO 3/16" MINIMUM STEEL FRAMING USE 3/8-16 GRADE 5 BOLT AND NUT. BOLT TO BE OF SUFFICIENT LENGTH TO ACHIEVE 3-THREAD PITCH MINIMUM BEYOND THE NUT. LOCATE ANCHORS AS SHOWN IN ELEVATIONS AND INSTALLATION DETAILS.
5) FOR WELDING TO 16GA. (.060" MIN.) STEEL FRAMING USE (2) 1/4" x 3 1/2" FILLET WELDS. LOCATE WELDS AS SHOWN IN ELEVATIONS AND INSTALLATION DETAILS.
6) FOR ANCHOR SCREWS OR BOLTS USE ITEM #11. FOR WELDING INSTALLATION USE 2" x 4" x 1/8" x 3 1/2" LONG A36 STEEL CLIP.

*SIGNED: 07/03/2018*

AIRE TECHNOLOGIES, INC.
1502 INDUSTRIAL DRIVE
E. MONONGAHELA, PA 15063

DC-HWD550 ALUMINUM VERTICAL LOUVER
MULLED & SINGLE UNITS - LARGE MISSILE IMPACT
INSTALLATION DETAILS - MULLION ANCHOR CLIP

| DRAWN: | DWG NO. | REV |
|---|---|---|
| TJH | 08-01060 | A |

| SCALE | DATE | SHEET |
|---|---|---|
| NTS | 08/23/10 | 9 OF 11 |


*L. ROBERTO LOMAS P.E.*
*1432 WOODFORD RD LEWISVILLE, NC 27023*
*434-688-0609 rllomas@lrlomaspe.com*

Luis R. Lomas P.E.
TX No.: 101889

| REVISIONS | | | |
|---|---|---|---|
| REV | DESCRIPTION | DATE | APPROVED |
| A | CHANGED MANUFACTURER'S NAME | 07/03/18 | R.L. |

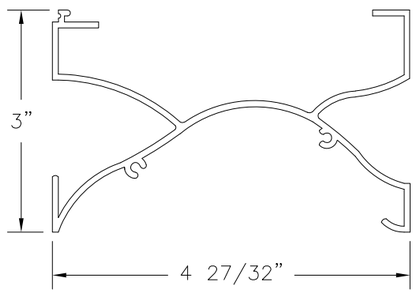


1 HDW550 HEAD
EXTRUDED ALUMINUM
6063-T5 .080" THICK

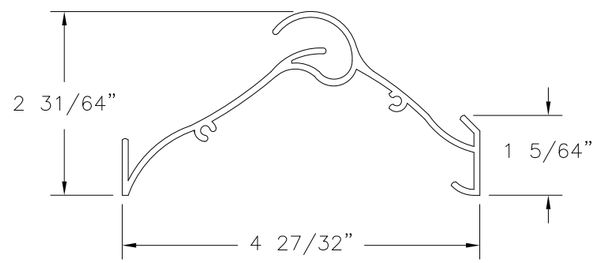


4 HDW550 BLADE
EXTRUDED ALUMINUM
6063-T5 .080" THICK

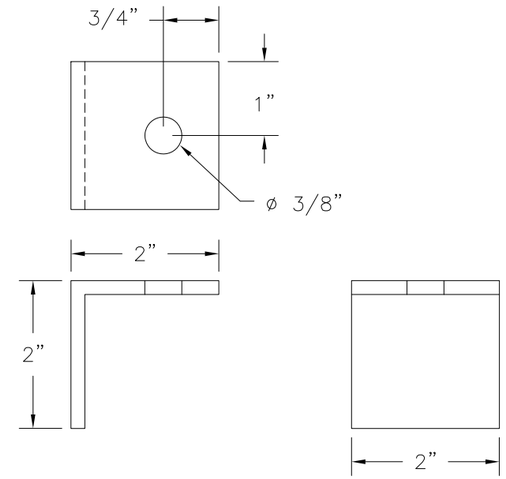


8 2" x 2" x 3/16" INSTALLATION ANGLE
EXTRUDED ALUMINUM 6063-T5 .1875" THICK

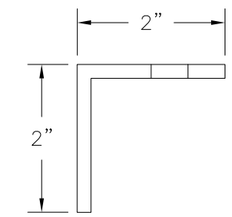


17 2" x 2" x 3/16" CONTINUOUS ANGLE
EXTRUDED ALUMINUM 6063-T5 .1875" THICK

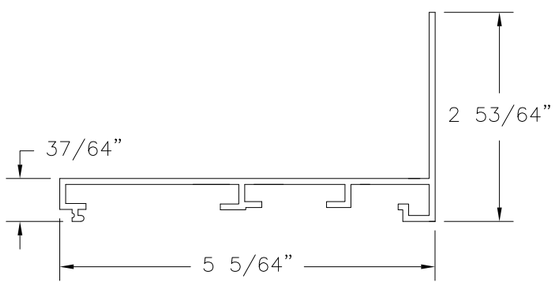


2 HDW550 BOTTOM
EXTRUDED ALUMINUM
6063-T5 .080" THICK

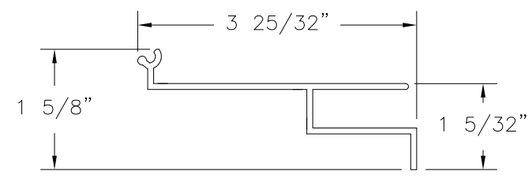


5 HDW550 BLADE SUPPORT
EXTRUDED ALUMINUM
6063-T5 .080" THICK

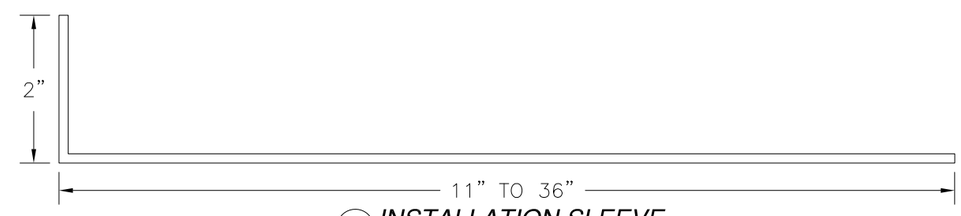


7 INSTALLATION SLEEVE
EXTRUDED ALUMINUM
3003 .101" THICK

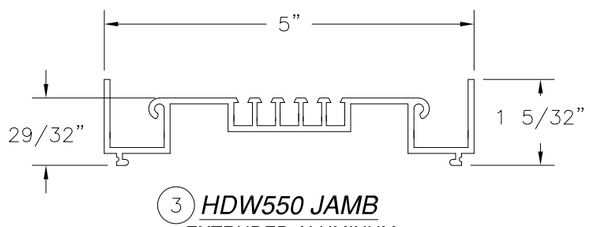


3 HDW550 JAMB
EXTRUDED ALUMINUM
6063-T5 .080" THICK

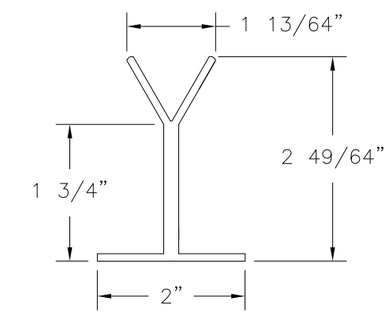


6 HDW550 VERTICAL BLADE SUPPORT
EXTRUDED ALUMINUM
6063-T5 .202" THICK

SIGNED: 07/03/2018

AIRE TECHNOLOGIES, INC.
1502 INDUSTRIAL DRIVE
E. MONONGAHELA, PA 15063

DC-HWD550 ALUMINUM VERTICAL LOUVER
MULLED & SINGLE UNITS - LARGE MISSILE IMPACT COMPONENTS

| DRAWN: | DWG NO. | REV |
|---|---|---|
| TJH | 08-01060 | A |

| SCALE | DATE | SHEET |
|---|---|---|
| NTS | 08/23/10 | 10 OF 11 |


L. ROBERTO LOMAS P.E.
1432 WOODFORD RD LEWISVILLE, NC 27023
434-688-0609 rllomas@lrlomaspe.com

Luis R. Lomas P.E.
TX No.: 101889

| REVISIONS | | | |
|---|---|---|---|
| REV | DESCRIPTION | DATE | APPROVED |
| A | CHANGED MANUFACTURER'S NAME | 07/03/18 | R.L. |

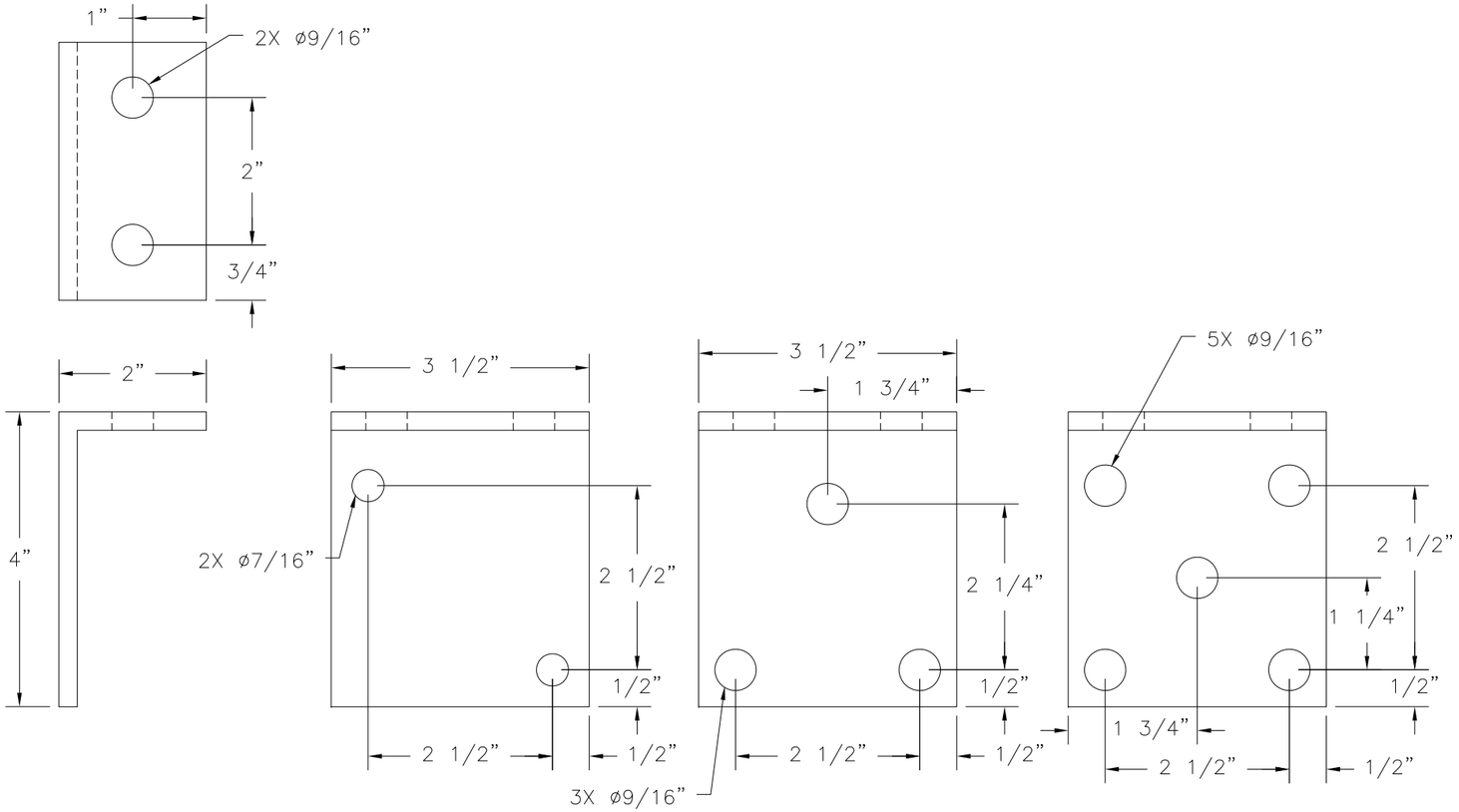


STEEL FRAMING INSTALLATION HOLE LAYOUT

CONCRETE INSTALLATION HOLE LAYOUT

2X BUCK/WOOD FRAMING INSTALLATION HOLE LAYOUT

(11) 2" x 4" x 1/4" x 3 1/2" CLIP
EXTRUDED ALUMINUM 6063-T5 .25" THICK

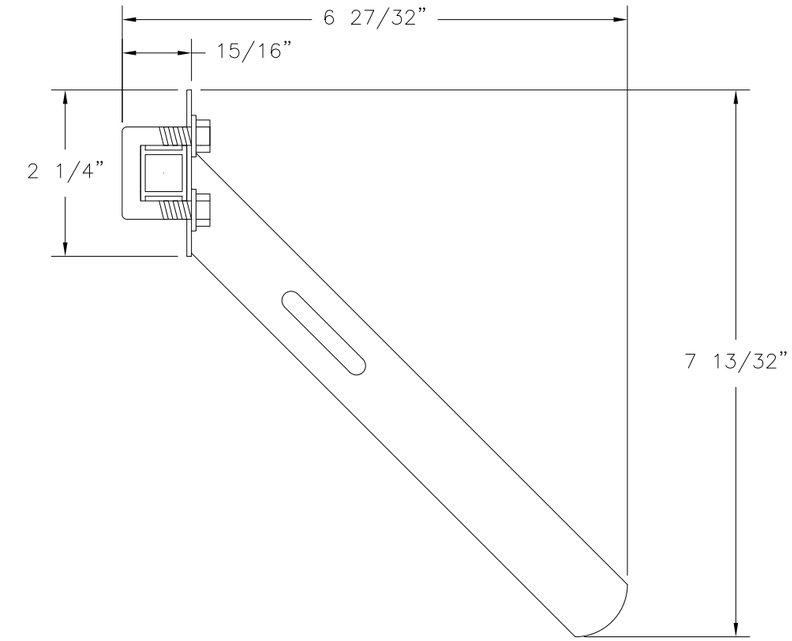


(19) HAND QUADRANT
ALUMINUM 6063-T5

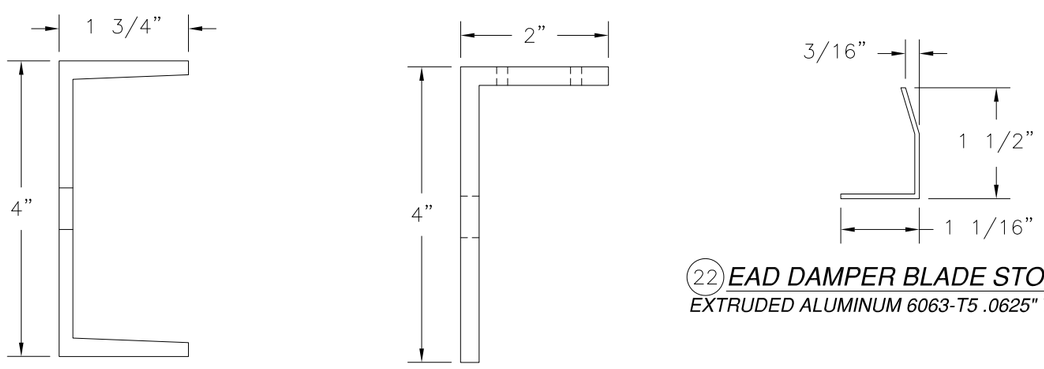


(10) MULLION C-CHANNEL
A36 STEEL .1875" THICK

(9) 2" x 4" x 1/4" MULLION ANGLE
EXTRUDED ALUMINUM 6063-T5 .25" THICK

(22) EAD DAMPER BLADE STOP
EXTRUDED ALUMINUM 6063-T5 .0625" THICK

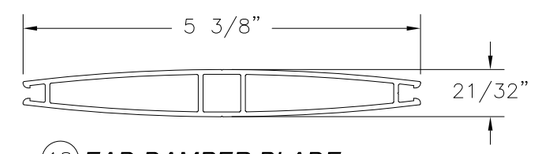


(18) EAD DAMPER BLADE
EXTRUDED ALUMINUM 6063-T5 .064" THICK

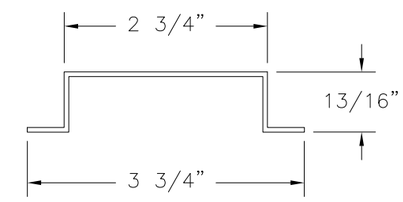


(21) EAD DAMPER HAT CHANNEL
EXTRUDED ALUMINUM 6063-T5 .0625 THICK

SIGNED: 07/03/2018

AIRE TECHNOLOGIES, INC.
1502 INDUSTRIAL DRIVE
E. MONONGAHELA, PA 15063

DC-HWD550 ALUMINUM VERTICAL LOUVER
MULLED & SINGLE UNITS - LARGE MISSILE IMPACT COMPONENTS

| DRAWN: TJH | DWG NO. 08-01060 | REV A |
|---|---|---|
| SCALE NTS | DATE 08/23/10 | SHEET 11 OF 11 |


L. ROBERTO LOMAS P.E.
1432 WOODFORD RD LEWISVILLE, NC 27023
434-688-0609 rllomas@lrlomaspe.com


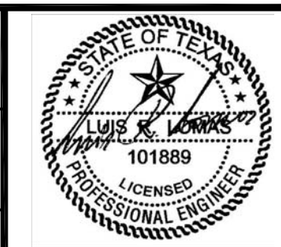


Luis R. Lomas P.E.
TX No.: 101889