REVISIONS				
CR	REV	DESCRIPTION	DATE	APPROVAL
500851	–	RELEASE PER ER	11/23/10	SFT
37647	A	REV PER ER	4/16/12	CRT
37704	B	REV PER ER	11/13/12	CRT

▷ NOTES

NOTES:

1. GLAZING OPTIONS – .090" MINIMUM SSB GLAZING IN MOLDED FRAMES SCREWED TOGETHER WITH A MINIMUM OF (10) #8x1" SCREWS INSTALLED IN TOP OR INTERMEDIATE SECTION (WITH OR WITHOUT DECORATIVE INSERTS) MEETS UNIFORM STATIC WIND PRESSURES SHOWN ON THIS DRAWING. GLAZING SHALL HAVE A MAXIMUM HEIGHT OF 10.69" AND A MAXIMUM LENGTH OF 15.94". GLAZING IS NOT IMPACT RESISTANT AND DOES NOT MEET THE REQUIREMENTS FOR WIND–BORNE DEBRIS REGIONS.

2. VINYL OR WOOD DOOR STOP NAILED A MAXIMUM OF 6" O.C. MUST OVERLAP TOP AND BOTH ENDS OF PANELS MINIMUM 7/16" TO MEET NEGATIVE PRESSURES.

3. KEY LOCK, SLIDE LOCKS, OR OPERATOR REQUIRED.

4. LOUVER OPTION – .040" MINIMUM LOUVERS IN MOLDED FRAMES SCREWED TOGETHER WITH A MINIMUM OF (10) #8x1" SCREWS INSTALLED IN THE BOTTOM SECTION. LOUVERS ARE NOT IMPACT RESISTANT AND DO NOT MEET THE REQUIREMENTS FOR WIND–BORNE DEBRIS REGIONS.

5. SECTION STEEL TO HAVE A MINIMUM 26 GA THICKNESS.

6. THE DESIGN OF THE SUPPORTING STRUCTURAL ELEMENTS SHALL BE THE RESPONSIBILITY OF THE PROFESSIONAL OF RECORD FOR THE BUILDING OR STRUCTURE AND IN ACCORDANCE WITH CURRENT BUILDING CODES FOR THE LOADS LISTED ON THIS DRAWING.

7. DOOR JAMB TO BE MINIMUM 2x4 STRUCTURAL GRADE LUMBER. REFER TO JAMB CONNECTION SUPPLEMENT FOR ATTACHMENT TO SUPPORTING STRUCTURE.

8. FOR LOW HEAD ROOM LIFT CONDITIONS, TOP BRACKET SHALL BE A 13 GA EHR 7/4 TOP BRACKET WITH A MINIMUM OF (3) 1/4–14x7/8" SELF DRILLING CRIMPTITE SCREWS IN LIEU OF THE BRACKET SHOWN ON THIS DRAWING. U–BAR ON TOP SECTION SHALL BE INSTALLED ON TOP OF EHR TOP BRACKETS.

9. IN LIEU OF THE SHORT PANEL EMBOSSMENT SHOWN, LONG PANEL EMBOSSMENT, V12 PANEL EMBOSSMENT OR NO EMBOSSMENT MAY BE USED.

"FAT" TRACK TYPE SHOWN BELOW

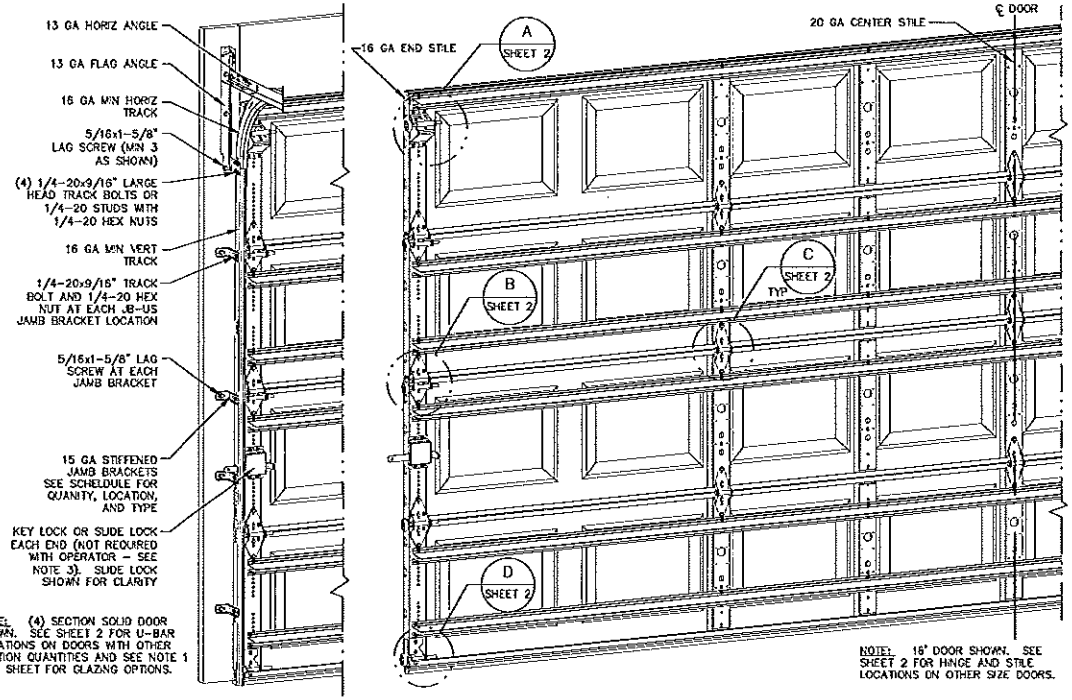

NOTE: (4) SECTION SOLID DOOR SHOWN. SEE SHEET 2 FOR U–BAR LOCATIONS ON DOORS WITH OTHER SECTION QUANTITIES AND SEE NOTE 1 THIS SHEET FOR GLAZING OPTIONS.

NOTE: 16' DOOR SHOWN. SEE SHEET 2 FOR HINGE AND STILE LOCATIONS ON OTHER SIZE DOORS.

STATE OF TEXAS
MARK A SAWICKI
106291
LICENSED
PROFESSIONAL ENGINEER
4/5/13

STATIC PRESSURE RATINGS	APPROVED SIZES
DESIGN PRESSURE(PSF): 23/–25	MAX WIDTH: 16'
	MAX HEIGHT: 14'
IMPACT/CYCLIC RATED: NO	MAX SECTION HEIGHT: 21"

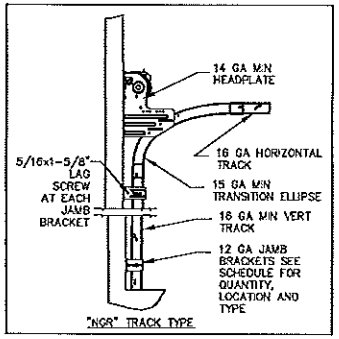

"NGR" TRACK TYPE

JAMB BRACKET SCHEDULE

DOOR HEIGHT	NO. OF SECTIONS	NO. OF JAMB BRACKETS (EACH JAMB)	TRACK TYPE	LOCATION OF CENTERLINE OF JAMB BRACKETS MEASURED FROM BOTTOM OF TRACK (ALL DIMENSIONS ± 2")
6'–6"	4	4	FAT	10" (.18–US), 25–3/4" (.18–US), 39" (.18–US), 57–1/4" (.18–US)
		6	NGR	5" (STD), 22" (STD), 35 3/4" (STD), 54–3/4" (STD), 67" (STD), 73" (STD)
7'–0"	4	4	FAT	10" (.18–US), 29–3/4" (.18–US), 42" (.18–US), 63–1/4" (.18–US)
		6	NGR	5" (STD), 22" (STD), 35 3/4" (STD), 54–3/4" (STD), 67" (STD), 73" (STD)
7'–6"	5	6	FAT	2" (.18–US), 10" (.18–US), 26–3/4" (.18–US), 45" (.18–US), 63" (.18–US), 74–1/2" (.18–US)
		7	NGR	5" (STD), 22" (STD), 35 3/4" (STD), 54–3/4" (STD), 67" (STD), 73" (STD), 82" (STD)
8'–0"	5	6	FAT	2" (.18–US), 10" (.18–US), 29–3/4" (.18–US), 48" (.18–US), 57–1/2" (.18–US), 77–1/2" (.18–US)
		7	NGR	5" (STD), 22" (STD), 35 3/4" (STD), 54–3/4" (STD), 67" (STD), 73" (STD), 82" (STD)
> 8'–0"				SEE NOTE BELOW

NOTE:
(FAT AND NGR) FOLLOWING DIMENSION DENOTES SLOTTED JAMB BRACKET ATTACHED TO TRACK WITH 1/4–20x9/16" TRACK BOLT AND NUT.
ALL DOORS GREATER THAN 8' IN HEIGHT REQUIRE USE OF CONTINUOUS WALL ANGLE. SEE SUPPLEMENT TRACK CHART FOR DETAILS.

SUPERIMPOSED DESIGN PRESSURE LOADS ON SUPPORTING STRUCTURE

DOOR WIDTH	DOOR HEIGHT	UNIFORM LOAD EACH JAMB (PLF)
10'–0"	ALL	+115.0/–125.0
12'–0"	ALL	+138.0/–150.0
14'–0"	ALL	+161.0/–175.0
15'–0"	ALL	+172.5/–187.5
16'–0"	ALL	+184.0/–200.0

SERIES 170–177, 180–187

MARK A. SAWICKI, PE
2501 S. STATE HWY 121, SUITE 200
LEWISVILLE, TX 75067
FL PE 72813
TX PE 106291

PROFESSIONAL ENGINEER'S SEAL PROVIDED ONLY FOR VERIFICATION OF WIND LOAD CONSTRUCTION DETAILS.

THE DRAWINGS AND ALL OTHER INFORMATION CONTAINED HEREIN ARE THE CONFIDENTIAL AND PROPRIETARY PROPERTY OF OVERHEAD DOOR CORPORATION AND ITS AFFILIATED COMPANIES. THIS DRAWING AND INFORMATION, IN WHOLE OR IN PART, MAY NOT BE COPIED IN ANY MANNER OR DISCLOSED TO ANYONE WITHOUT THE PRIOR WRITTEN CONSENT OF OVERHEAD DOOR CORPORATION. NO DISCLOSURE OF ANY OF THIS DRAWING OR INFORMATION IS INTENDED TO OPERATE AS A LICENSE OR AUTHORIZATION TO USE IT FOR ANY PURPOSE WITHOUT THE SPECIFIC WRITTEN CONSENT OF OVERHEAD DOOR CORPORATION.

REF DWG	USED ON

TWO DECIMAL PLACES — TOLERANCES UNLESS OTHERWISE SPECIFIED
HOLE DIAMETER: UNDER .251 +.004/–.003; .251 TO .500 +.006/–.003; OVER .500 +.006/–.003
FRACTIONS: ± 1/16
WHOLE NUMBERS: ± .25; .X ± .1; .XX ± .03; .XXX ± .010; ANGLES: ± .5°

FINISH: N/A
UNIT OF MEASURE: EACH
MATERIAL: NONE

THE OVERHEAD DOOR COMPANY, LEWISVILLE, TEXAS

	NAME	DATE
DRAWN BY:	G. TAYLOR	10/15/10
CHECKED BY:	M. SAWICKI	10/25/10
APPROVED BY:	F. TUONG	11/23/10

DRAWING TITLE: SERIES 170, 180WL WS4, 16' MAX WIDE
DRAWING NUMBER: D–411046
SCALE: N.T.S. SHEET 1 of 2

REVISIONS				
ER	REV	DESCRIPTION	DATE	APPROVAL
550851	–	RELEASE PER ER	11/23/10	SFT
32647	A	REV PER ER	4/16/12	GST
33724	B	REV PER ER	11/13/12	GRT

▷ NOTES

13 GA ROLLER SLIDE ATTACHED TO BRACKET WITH 5/16-18 BOLT & NUT IN CENTER SLOT AND 1/4-20x9/16" TRACK BOLT & 1/4-20 HEX NUT THROUGH ANY TWO ALIGNING HOLES

13 GA COMMERCIAL 'A' FRAME TOP BRACKET ATTACHED WITH (4) 1/4-14x7/8" SELF DRILLING CRIMPTITE SCREWS

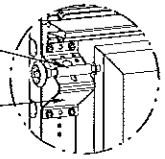

DETAIL A

ADD (2) 1/4-14x7/8" SELF DRILLING CRIMPTITE SCREWS (INSIDE OF EACH END HINGE)

2" NYLON STORMGARD ROLLER WITH 4-1/2" STEM AND 7/16" PUSHNUT AT EACH ROLLER LOCATION. 1/4" MAX BETWEEN PUSHNUT AND BRACKET OR HINGE

14 GA WIDE BODY END HINGE ATTACHED WITH (4) 1/4-14x5/8" SELF TAPPING SCREWS

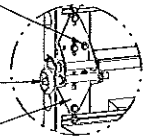

DETAIL B

18 GA NARROW BODY INTERMEDIATE HINGE ATTACHED WITH (4) 1/4-14x5/8" SELF TAPPING SCREWS

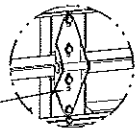

DETAIL C

14 GA BOTTOM BRACKET ATTACHED WITH (2) 1/4-14x7/8" SELF DRILLING CRIMPTITE SCREWS AND (1) 1/4-14x5/8" SELF DRILLING TAMPER RESISTANT SCREW

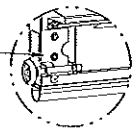

DETAIL D

CENTER STILE & INTERMEDIATE HINGE LOCATIONS

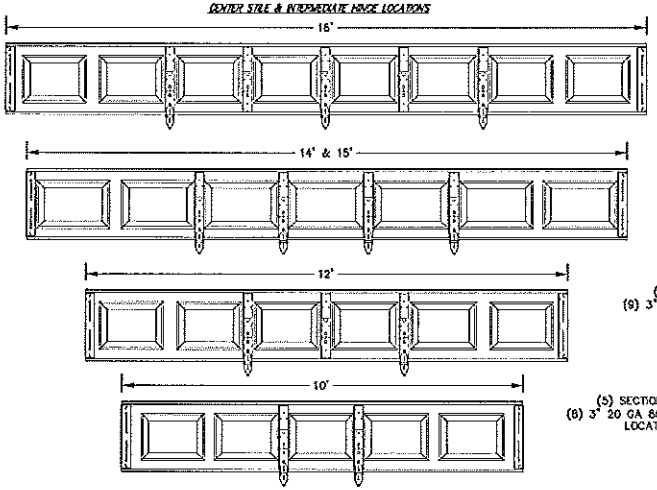

U-BAR LOCATIONS

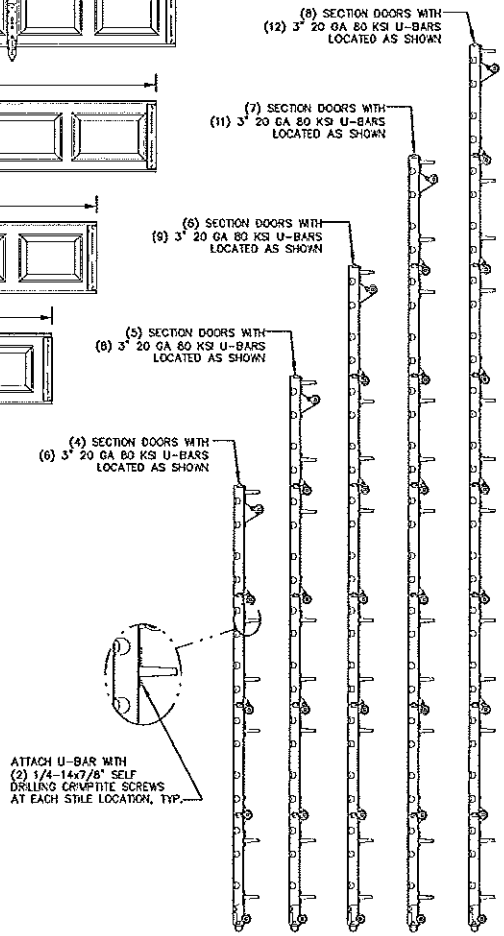

STATE OF TEXAS
MARK A SAWICKI
106291
LICENSED
PROFESSIONAL ENGINEER
11/15/13

MARK A. SAWICKI, PE
2501 S. STATE HWY 121, SUITE 200
LEWISVILLE, TX 75067
FL PE 72613
TX PE 106291

PROFESSIONAL ENGINEER'S SEAL PROVIDED ONLY FOR VERIFICATION OF WIND LOAD CONSTRUCTION DETAILS.

THE DRAWINGS AND ALL OTHER INFORMATION CONTAINED HEREIN ARE THE CONFIDENTIAL AND PROPRIETARY PROPERTY OF OVERHEAD DOOR CORPORATION AND ITS AFFILIATED COMPANIES. THIS DRAWING AND INFORMATION, IN WHOLE OR IN PART, MAY NOT BE COPIED IN ANY MANNER OR DISCLOSED TO ANYONE WITHOUT THE PRIOR WRITTEN CONSENT OF OVERHEAD DOOR CORPORATION. NO DISCLOSURE OF ANY OF THIS DRAWING OR INFORMATION IS INTENDED TO OPERATE AS A LICENSE OR AUTHORIZATION TO USE IT FOR ANY PURPOSE WITHOUT THE SPECIFIC WRITTEN CONSENT OF OVERHEAD DOOR CORPORATION.

REF DWG	USED ON

TWO MILE PRECISION

ISSUE Y14.100 AND Y14.5 APPLY UNLESS OTHERWISE SPECIFIED. DIMENSIONS ARE IN U.S. CUSTOMARY UNITS.

TOLERANCES UNLESS OTHERWISE SPECIFIED

HOLE DIAMETER	WHOLE NUMBERS: ± .25
UNDER .251 +.004/-.003	.X ± .1
.251 TO .500 +.006/-.003	.XX ± .03
OVER .500 +.008/-.003	.XXX ± .010
FRACTIONS ± 1/16	ANGLES: ± .5°

FINISH: N/A

UNIT OF MEASURE: EACH

MATERIAL: NONE

Ever Quality. Ever Value. LEWISVILLE, TEXAS

	NAME	DATE
DRAWN BY:	G. TAYLOR	10/15/10
CHECKED BY:	M. SAWICKI	10/25/10
APPROVED BY:	F. TUONG	11/23/10

DRAWING TITLE: SERIES 170, 180WL WS4, 16' MAX WIDE

DRAWING NUMBER: D-411046

SCALE: N.T.S. SHEET 2 OF 2