REVISIONS				
ER	REV	DESCRIPTION	DATE	APPROVAL
500651	—	RELEASE PER ER	11/23/10	SFT
30547	A	REV PER ER	4/16/12	GRT
30704	B	REV PER ER	11/13/12	GRT

▷ NOTES

NOTES:

1. IMPACT RESISTANT GLAZING OPTION– IMPACT RESISTANT GLAZING SYSTEM MAY BE INSTALLED IN TOP OR INTERMEDIATE SECTION (WITH OR WITHOUT DECORATIVE INSERTS). GLAZING SHALL BE 1/4" POLYCARBONATE. MAXIMUM GLAZING DIMENSIONS SHALL BE 12.41" x 18.53" CUTOUT, FASTENED WITH #8 X 1" SMS: 3X ALONG THE HORIZONTAL AND 2X ALONG THE VERTICAL. SEE DETAIL A ON SHEET 2 FOR ASSEMBLY DETAILS.

2. NON-IMPACT RESISTANT GLAZING OPTION – .090" MINIMUM SS9 GLAZING IN MOLDED FRAMES SCREWED TOGETHER WITH A MINIMUM OF (10) #8x1" SCREWS INSTALLED IN TOP OR INTERMEDIATE SECTION (WITH OR WITHOUT DECORATIVE INSERTS) MEETS UNIFORM STATIC WIND PRESSURES SHOWN ON THIS DRAWING. GLAZING SHALL HAVE A MAXIMUM HEIGHT OF 10.69" AND A MAXIMUM LENGTH OF 18.94". GLAZING IS NOT IMPACT RESISTANT AND DOES NOT MEET THE REQUREMENTS FOR WIND–BORNE DEBRIS REGIONS.

3. VINYL OR WOOD DOOR STOP NAILED A MAXIMUM OF 6" O.C. MUST OVERLAP TOP AND BOTH ENDS OF PANELS MINIMUM 7/16" TO MEET NEGATIVE PRESSURES.

4. KEY LOCK, SLIDE LOCK, OR OPERATOR REQUIRED.

5. LOUVER OPTION – .040" MINIMUM LOUVERS IN MOLDED FRAMES SCREWED TOGETHER WITH A MINIMUM OF (10) #8x1" SCREWS INSTALLED IN THE BOTTOM SECTION. LOUVERS ARE NOT IMPACT RESISTANT AND DO NOT MEET THE REQUIREMENTS FOR WIND–BORNE DEBRIS REGIONS.

6. SECTION STEEL TO HAVE A MINIMUM 26 GA THICKNESS.

7. THE DESIGN OF THE SUPPORTING STRUCTURAL ELEMENTS SHALL BE THE RESPONSIBILITY OF THE PROFESSIONAL OF RECORD FOR THE BUILDING OR STRUCTURE AND IN ACCORDANCE WITH CURRENT BUILDING CODES FOR THE LOADS LISTED ON THIS DRAWING.

8. DOOR JAMB TO BE MINIMUM 2x5 STRUCTURAL GRADE LUMBER. REFER TO JAMB CONNECTION SUPPLEMENT FOR ATTACHMENT TO SUPPORTING STRUCTURE.

9. FOR LOW HEAD ROOM LIFT CONDITIONS, TOP BRACKET SHALL BE A 13 GA LHR 7/4 TOP BRACKET WITH A MINIMUM OF (3) 1/4–14x7/8" SELF DRILLING CRIMPTITE SCREWS IN LIEU OF THE BRACKET SHOWN ON THIS DRAWING. U–BAR ON TOP SECTION SHALL BE INSTALLED ON TOP OF LHR TOP BRACKETS.

10. IN LIEU OF THE SHORT PANEL EMBOSSMENT SHOWN, LONG PANNEL EMBOSSMENT, V12 PANNEL EMBOSSEMENT OR NO EMBOSSMENT MAY BE USED.

"FAT" TRACK TYPE SHOWN BELOW

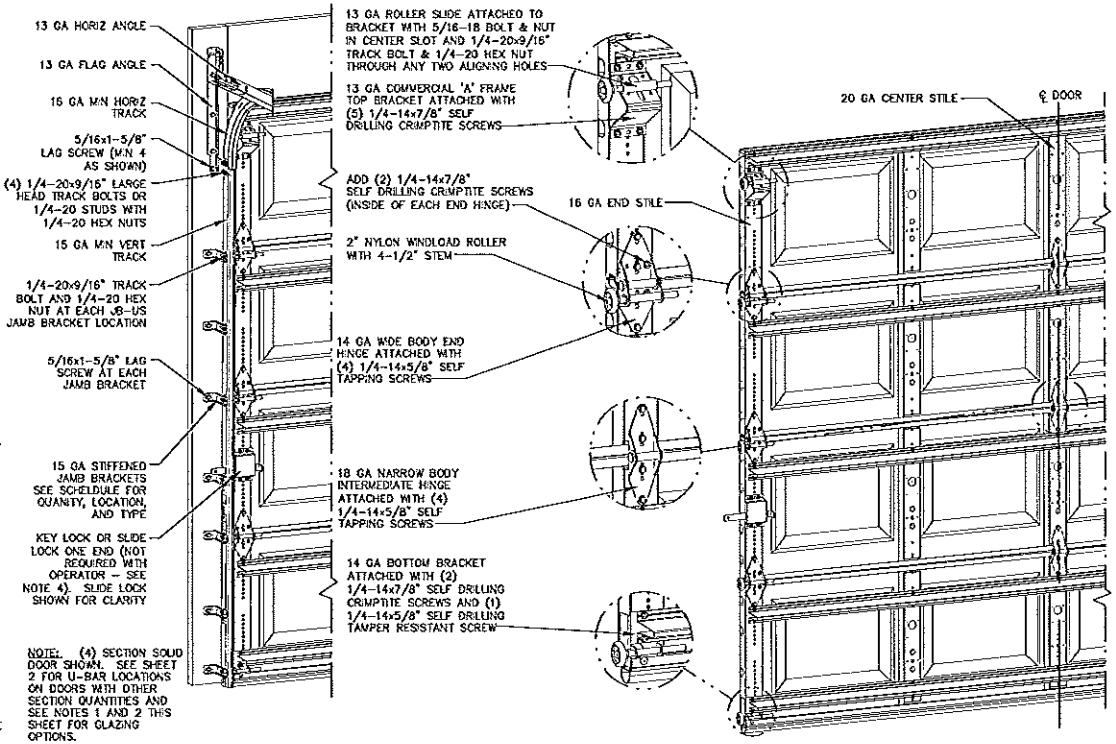

NOTE: (4) SECTION SOLID DOOR SHOWN. SEE SHEET 2 FOR U–BAR LOCATIONS ON DOORS WITH OTHER SECTION QUANTITIES AND SEE NOTES 1 AND 2 THIS SHEET FOR GLAZING OPTIONS.

STATE OF TEXAS
MARK A SAWICKI
106291
LICENSED
PROFESSIONAL ENGINEER
4/5/13

STATIC PRESSURE RATINGS	APPROVED SIZES
DESIGN PRESSURE(PSF): 46/–52	MAX WIDTH: 9'
	MAX HEIGHT: 14'
IMPACT/CYCLIC RATED: YES	MAX SECTION HEIGHT: 21"

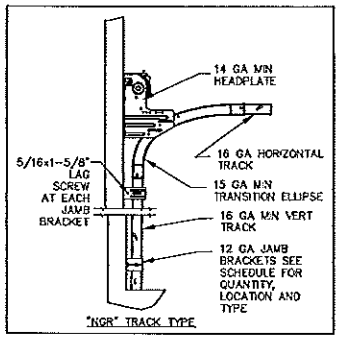

"NGR" TRACK TYPE

JAMB BRACKET SCHEDULE

DOOR HEIGHT	NO. OF SECTIONS	NO. OF JAMB BRACKETS (EACH JAMB)	LOCATION OF CENTERLINE OF JAMB BRACKETS MEASURED FROM BOTTOM OF TRACK (ALL DIMENSIONS ± 2")
6'–6"	4	FAT–7	2" (JB–US), 10" (JB–US), 21–3/4" (JB–US), 29–3/4" (JB–US), 39" (JB–US), 48" (JB–US), 57–1/4" (JB–US)
		NGR–6	5" (STD), 22" (STD), 35 3/4" (STD), 54–3/4" (STD), 67" (STD), 73" (STD)
7'–0"	4	FAT–7	2" (JB–US), 10" (JB–US), 21–3/4" (JB–US), 29–3/4" (JB–US), 42" (JB–US), 52–1/2" (JB–US), 63–1/4" (JB–US)
		NGR–6	5" (STD), 22" (STD), 35 3/4" (STD), 54–3/4" (STD), 67" (STD), 73" (STD)
7'–6"	5	FAT–8	2" (JB–US), 10" (JB–US), 18–3/4" (JB–US), 26–3/4" (JB–US), 36" (JB–US), 45" (JB–US), 54–1/4" (JB–US), 74–1/2" (JB–US)
		NGR–7	5" (STD), 22" (STD), 35 3/4" (STD), 54–3/4" (STD), 67" (STD), 73" (STD), 82" (STD)
8'–0"	5	FAT–8	2" (JB–US), 10" (JB–US), 21–3/4" (JB–US), 29–3/4" (JB–US), 39" (JB–US), 48" (JB–US), 57–1/2" (JB–US), 75–1/2" (JB–US)
		NGR–7	5" (STD), 22" (STD), 35 3/4" (STD), 54–3/4" (STD), 67" (STD), 73" (STD), 82" (STD)
> 8'–0"			SEE NOTE BELOW

NOTE:
(JB AND NGR) FOLLOWING DIMENSION DENOTES SLOTTED JAMB BRACKET ATTACHED TO TRACK WITH 1/4–20x9/16" TRACK BOLT AND NUT AS SHOWN ABOVE.

ALL DOORS GREATER THAN 8' IN HEIGHT REQUIRE USE OF CONTINUOUS WALL ANGLE. SEE SUPPLEMENT TRACK CHART FOR DETAILS.

SUPERIMPOSED DESIGN PRESSURE LOADS ON SUPPORTING STRUCTURE

DOOR WIDTH	DOOR HEIGHT	UNIFORM LOAD EACH JAMB (PLF)
8'–0"	ALL	+184.0/–208.0
9'–0"	ALL	+207.0/–234.0

SERIES 170–177, 180–187

MARK A. SAWICKI, PE
2501 S. STATE HWY 121, SUITE 200
LEWISVILLE, TX 75067
FL PE 72613
TX PE 106291

PROFESSIONAL ENGINEER'S SEAL PROVIDED ONLY FOR VERIFICATION OF WIND LOAD CONSTRUCTION DETAILS.

THE DRAWINGS AND ALL OTHER INFORMATION CONTAINED HEREIN ARE THE CONFIDENTIAL AND PROPRIETARY PROPERTY OF OVERHEAD DOOR CORPORATION AND ITS AFFILIATED COMPANIES. THIS DRAWING AND INFORMATION, IN WHOLE OR IN PART, MAY NOT BE COPIED IN ANY MANNER OR DISCLOSED TO ANYONE WITHOUT THE PRIOR WRITTEN CONSENT OF OVERHEAD DOOR CORPORATION. NO DISCLOSURE OF ANY OF THIS DRAWING OR INFORMATION IS INTENDED TO OPERATE AS A LICENSE OR AUTHORIZATION TO USE IT FOR ANY PURPOSE WITHOUT THE SPECIFIC WRITTEN CONSENT OF OVERHEAD DOOR CORPORATION.

REF DWG	USED ON

THIRD ANGLE PROJECTION

ASME Y14.100 AND Y14.5 APPLY UNLESS OTHERWISE SPECIFIED DIMENSIONS ARE IN U.S. CUSTOMARY UNITS

TOLERANCES UNLESS OTHERWISE SPECIFIED

HOLE DIAMETER	WHOLE NUMBERS: ± .25
UNDER .251 +.004/–.003	.X ± .1
.251 TO .500 +.006/–.003	.XX ± .03
OVER .500 +.008/–.003	.XXX ± .010
FRACTIONS ± 1/16	ANGLES: ± .5°

FINISH: N/A

UNIT OF MEASURE: EACH

MATERIAL: NONE

THE TOWNSEND COMPANY LEWISVILLE, TEXAS

	NAME	DATE
DRAWN BY:	G. TAYLOR	10/15/10
CHECKED BY:	M. SAWICKI	10/25/10
APPROVED BY:	F. TUONO	11/23/10

DRAWING TITLE: SERIES 170, 180WL WS9, 9' MAX WIDE

DRAWING NUMBER: D–411043

SCALE: N.T.S. SHEET 1 OF 2

▷ NOTES

REVISIONS				
ER	REV	DESCRIPTION	DATE	APPROVAL
500651	–	RELEASE PER ER	11/23/10	SFT
30547	A	REV PER ER	4/16/12	GRT
30704	B	REV PER ER	11/13/12	GRT

CENTER STILE & INTERMEDIATE HINGE LOCATIONS

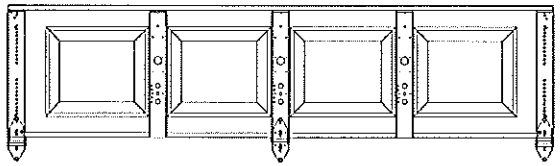

U-BAR LOCATIONS

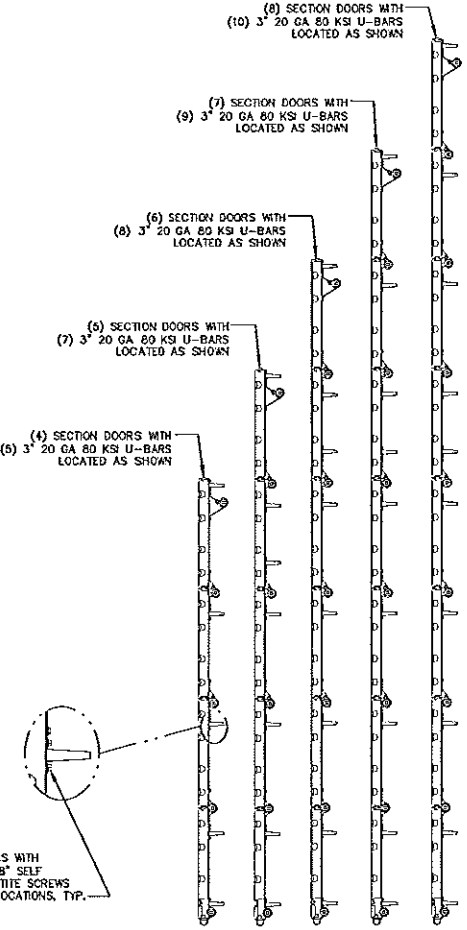

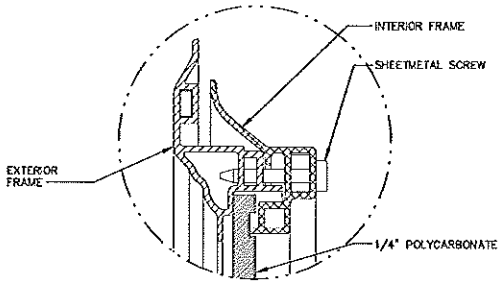

DETAIL A

STATE OF TEXAS
MARK A SAWICKI
106291
LICENSED
PROFESSIONAL ENGINEER

4/5/13

MARK A. SAWICKI, PE
2501 S. STATE HWY 121, SUITE 200
LEWISVILLE, TX 75067
FL PE 72613
TX PE 106291

PROFESSIONAL ENGINEER'S SEAL PROVIDED ONLY FOR VERIFICATION OF WIND LOAD CONSTRUCTION DETAILS.

THE DRAWINGS AND ALL OTHER INFORMATION CONTAINED HEREIN ARE THE CONFIDENTIAL AND PROPRIETARY PROPERTY OF OVERHEAD DOOR CORPORATION AND ITS AFFILIATED COMPANIES. THIS DRAWING AND INFORMATION, IN WHOLE OR IN PART, MAY NOT BE COPIED IN ANY MANNER OR DISCLOSED TO ANYONE WITHOUT THE PRIOR WRITTEN CONSENT OF OVERHEAD DOOR CORPORATION. NO DISCLOSURE OF ANY OF THIS DRAWING OR INFORMATION IS INTENDED TO OPERATE AS A LICENSE OR AUTHORIZATION TO USE IT FOR ANY PURPOSE WITHOUT THE SPECIFIC WRITTEN CONSENT OF OVERHEAD DOOR CORPORATION.

		TWO HOLE PROTECTION	TOLERANCES UNLESS OTHERWISE SPECIFIED		FINISH	The Georgia Tech Organization LEWISVILLE, TEXAS	NAME	DATE	DRAWING TITLE
			HOLE DIAMETER	WHOLE NUMBERS: ± .25	N/A		DRAWN BY: G. TAYLOR	10/15/10	SERIES 170, 180WL WS9, 9' MAX WIDE
		ASME Y14.100 AND Y14.5 APPLY. UNLESS OTHERWISE SPECIFIED DIMENSIONS ARE IN U.S. CUSTOMARY UNITS	UNDER .251 +.004/-.003	.X ± .1	UNIT OF MEASURE	MATERIAL:	CHECKED BY: M. SAWICKI	10/25/10	DRAWING NUMBER D-411043
			.251 TO .500 +.006/-.003	.XX ± .03	EACH	NONE	APPROVED BY: F. TJONG	11/23/10	SCALE: N.T.S. SHEET 2 OF 2
			OVER .500 +.006/-.003	.XXX ± .010					
			FRACTIONS	ANGLES: ± .5°					
REF DWG	USED ON		± 1/16						