NOTE: DOUBLE TRACK LOW HEADROOM, HI-LIFT TRACK, FOLLW-THE-ROOF TRACK AND VERTICAL LIFT TRACK ARE AVAILABLE OPTIONS. 3" TRACK ALSO AVAILABLE.

MAX. 14'-2" WIDE X 18'-0" HIGH

REVISIONS					
REV. NO.	ZONE:	DATE:	ECN NO.	APPVD:	DESCRIPTION
07	–	10/26/05	–	–	ADDED ROLLER OPTION & FV SECTION
08	–	11/2008	–	–	ADDED MPC; UPDATED JAMB ATTACHMENTS.
09	–	02/2012	–	–	UPDATED WINDCODE CHART
10	–	08/2012	–	–	REVISED FOR TDI.
11	–	06/2013	–	SH	REMOVED GLAZING OPTION

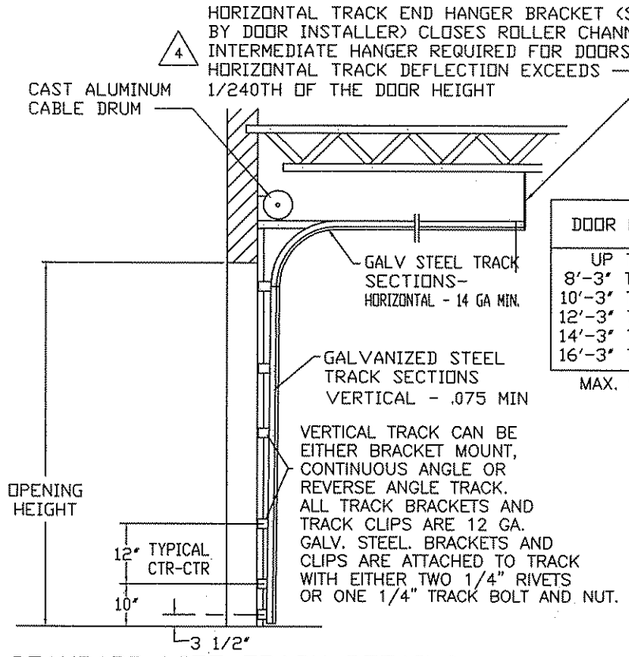

STANDARD-LIFT TRACK DETAILS.

MODELS AVAILABLE (CLOPAY/ HOLMES/ IDEAL)
MODELS 524, 520/ 224/ C4ST, COST
INSULATED MODELS 524S, 520S, 524V/ 224S/ C4SS, COSS, C4SV

DOOR HEIGHT 'A'	NUMBER OF SECTIONS
UP TO 8'-0"	4
8'-3" THRU 10'-0"	5
10'-3" THRU 12'-0"	6
12'-3" THRU 14'-0"	7
14'-3" THRU 16'-0"	8
16'-3" THRU 18'-0"	9

MAX. SECTION HEIGHT: 24"

DOOR WIDTH	NUMBER OF CENTER STILES	NUMBER OF C-CHANNEL STRAPS
12'-3" THRU 13'-2"	2	6
13'-3" THRU 14'-2"	3	7

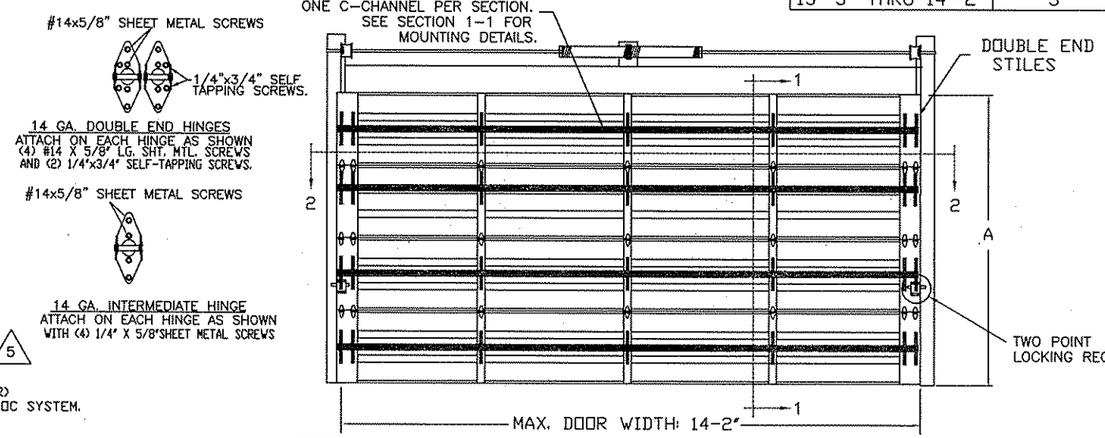

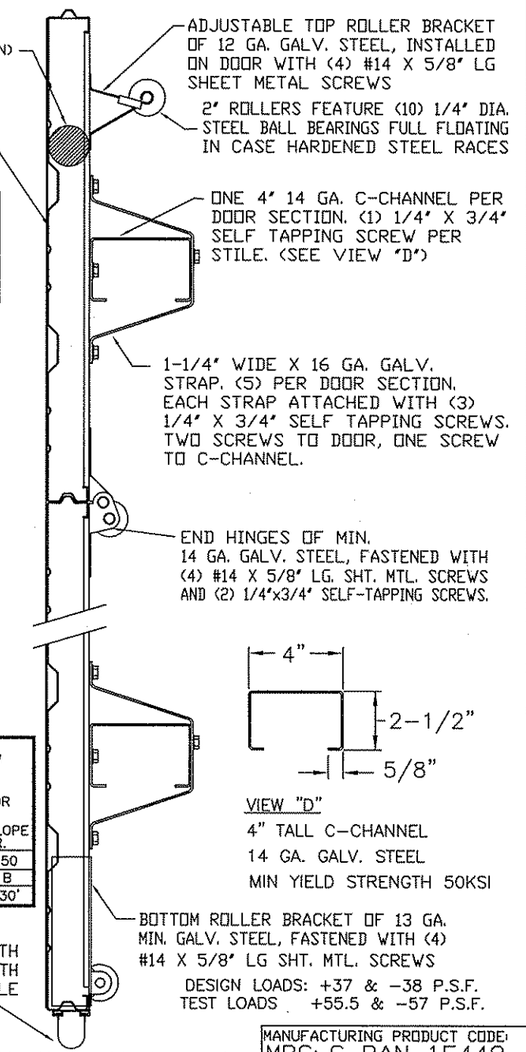

SECTION 1 - 1

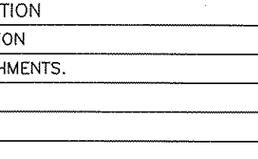

VIEW "D"
4" TALL C-CHANNEL
14 GA. GALV. STEEL
MIN YIELD STRENGTH 50KSI

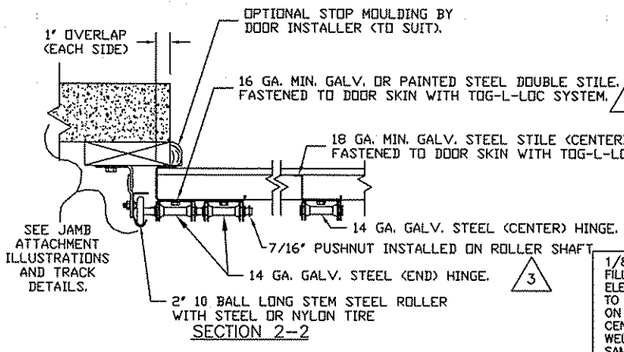

SECTION 2-2

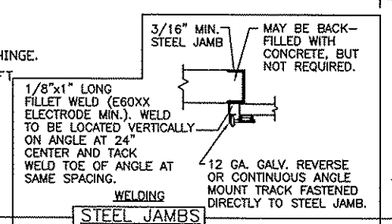

ANCHOR NOTE: FIRST (BOTTOM) ANCHOR STARTING AT NO MORE THAN HALF OF THE MAXIMUM ON-CENTER DISTANCE. HIGHEST ANCHOR INSTALLED AT LEAST AS HIGH AS THE DOOR OPENING.

THIS DOOR MEETS OR EXCEEDS THE DESIGN LOADS FOR THE WIND SPEEDS LISTED BELOW ACCORDING TO THE FLORIDA BLDG. CODE OR IBC (ASCE7) FOR THE FOLLOWING CONDITIONS: 1) ENCLOSED BUILDING, 2) DOOR HAS 2' OF WIDTH IN BUILDING'S END ZONE, 3) IMPORTANCE FACTOR OF 1.0, 4) ROOF SLOPE LESS THAN 10°, AND 5) 50% SAFETY FACTOR.

WIND SPEED (MPH)	≤ 130	140	140	150
EXPOSURE LEVEL	B or C	B	C	B
MEAN ROOF HEIGHT	30'	30'	15'	30'

WOOD JAMB ON CONCRETE

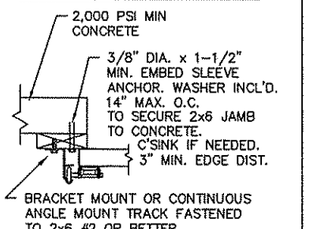

CONCRETE JAMBS

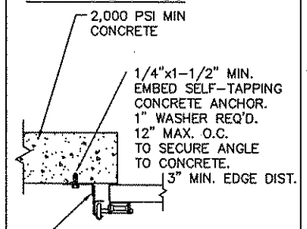

STEEL JAMBS

SELF-TAPPING SCREWS

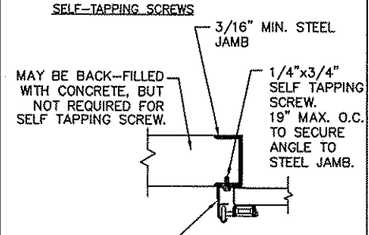

WOOD JAMBS

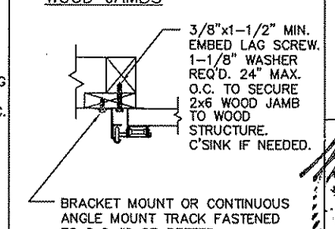

THE DESIGN OF THE SUPPORTING STRUCTURAL ELEMENTS IS THE RESPONSIBILITY OF THE BUILDING ENGINEER OR ARCHITECT OF RECORD.

CLOPAY CORP. ALL RIGHTS RESERVED.

MARK WESTERFIELD, P.E.
FLORIDA P.E. #48495, NC P.E. #23832,
TEXAS P.E. #91513

Third Angle Projection

Unless Stated Otherwise TOLERANCES are
.0 = ±.031
.00 = ±.015
.000 = ±.005
.0000 = ±.001
Degrees = ±1/2°
Unless Stated Otherwise DIMENSIONS ARE IN INCHES.

Clopay Building Products Company
8585 Duke Boulevard
Mason, OH 45040 USA
Tel. No. 513-770-4800
Fax No. 513-770-4853

MANUFACTURING PRODUCT CODE: MPC: C-PAN-1E448

WINDLOAD RATING W6

DESCRIPTION: COMMERCIAL RIBBED DOOR, +37/ -38 PSF DESIGN LOAD

DRAWN BY: DAS	DATE: 5/13/02	SCALE: NONE	DWG. SIZE B
CHECKED BY: MWW	DATE: 5/02	SHEET 1 OF 1	
DWG. NO.: 102585		VER: IBC	