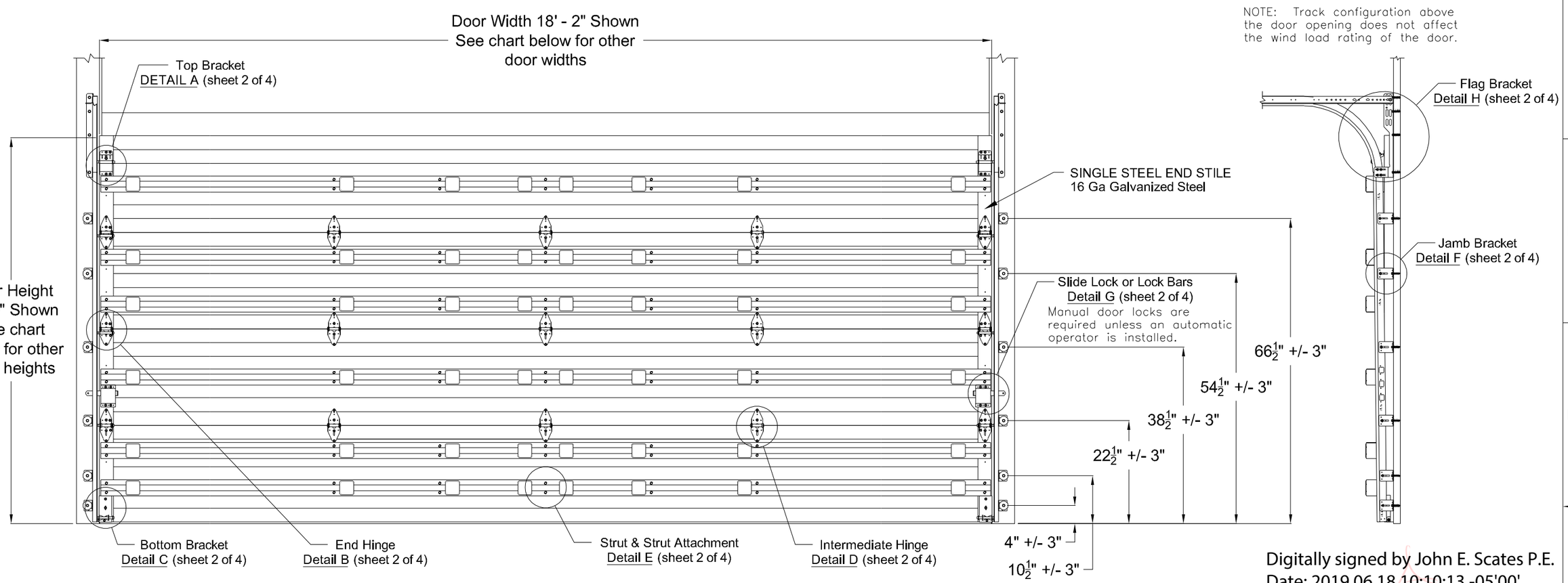

This product has been evaluated per ANSI/DASMA 108 for static air pressure.

This product has been evaluated per ANSI/DASMA 115 for large missile impact and cyclic wind pressure.

Door Widths Up To	Design Pressures		End Stile	Model Number: HT 5 _80 SERIES		HT 5_70 SERIES		HT 5 _10 SERIES HT 5 _12 SERIES HT 5 _14 SERIES HT 5 _16 SERIES		Impact Resistant
	+ psf	- psf		Center Stiles	Center Hinges	Center Stiles	Center Hinges	Center Stiles	Center Hinges	
14'-2"	30.0	-33.9	Single	4	3	3	3	5	3	YES
16'-2"	30.0	-33.9	Single	5	3	5	3	5	3	YES
18'-2"	30.0	-33.9	Single	5	3	5	3	5	3	YES

This product is designed and sold by PSF. The AHJ or Engineer of Record is responsible for determining the PSF required for any given site.

Jamb bracket quantities shown are for use with grade 2 or better southern pine jambs.

Supporting structural elements are to be designed by a registered professional engineer for specific wind loads.

Door Height	Total # of Sections	Total # of Struts	Jamb Brkts per Side
6'-0"	3	5	5
6'-0"	4	6	5
6'-3"	4	6	5
6'-6"	4	6	6
6'-9"	4	6	6
7'-0"	4	6	6
7'-3"	4	6	6
7'-6"	4	6	6
7'-6"	5	8	6
7'-9"	4	6	6
7'-9"	5	8	6
8'-0"	4	6	6
8'-0"	5	8	6

Maximum section height is 24 in.

Maximum door height is 20 ft.

All doors, even those above the tested height, are available with jamb brackets or commercial full angle. The maximum spacing of the jamb brackets/track clips should be maintained.

NOTICE:
These drawings are a supplement to the installation instructions for a standard door and only covers those procedures that vary from standard door installation. If these specific procedures are not followed, the door may not perform as designed.

Digitally signed by John E. Scates P.E.
Date: 2019.06.18 10:10:13 -05'00'

STATE OF TEXAS
JOHN E. SCATES
56308
LICENSED
PROFESSIONAL ENGINEER

John E Scates, P.E.
2560 King Arthur Blvd. Ste 124-54
Lewisville, Texas 75056
Texas P.E. 56308/F2203

IMPACT RESISTANT

Professional Engineer seal provided only for verification of wind load construction details.

Haas Door
A Nofziger Company

320 Sycamore
Wauseon, Ohio 43567
© Copyright 2014

DESCRIPTION:
18' 2" HT 5000 ALUMINUM SERIES
WIND LOAD SECTIONAL DOOR
DESIGN PRESSURE +30.0/-33.9 PSF

DRAWING NO.: WLTI-5000-0218-08-30-34		**REV.**
DATE DRN: 11/17/18	**DRAWN BY:** MVS	**REV. DATE:**
MODEL(S): See Sheet 3		**SHEET:** 1 **OF** 4

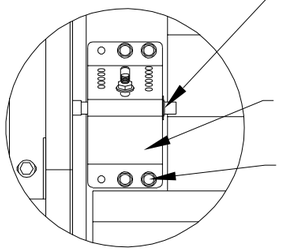

PUSH NUT
7/16"
See DETAIL K for push nut placement.

ADJUSTABLE TOP FIXTURE
12 Ga

TEK SCREW
1/4" X 3/4" Hex Washer Head
Self Drilling (4 per Bracket)

DETAIL A

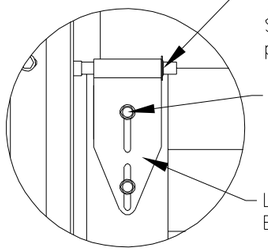

PUSH NUT
7/16"
See DETAIL K for push nut placement.

TEK SCREW
1/4" X 3/4" Hex Washer Head
Self Drilling (2 per Bracket)

LOW HEADROOM TOP BRACKET – 12 Ga

LOW HEADROOM TOP BRACKET

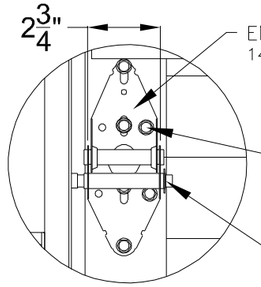

$2\frac{3}{4}$"

END HINGE
14 Ga Galvanized Steel

TEK SCREW
1/4" X 3/4" Hex Washer Head
Self Drilling (6 per Hinge)

PUSH NUT
7/16"
See DETAIL K for push nut placement.

DETAIL B

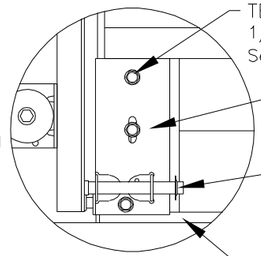

TEK SCREW
1/4" X 3/4" Hex Washer Head
Self Drilling (3 per Bottom Bracket)

BOTTOM BRACKET
13 Ga Galvanized Steel

PUSH NUT
7/16"
See DETAIL K for push nut placement.

BOTTOM SEAL

DETAIL C

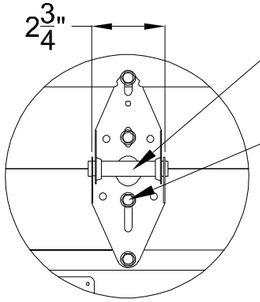

$2\frac{3}{4}$"

INTERMEDIATE HINGE
18 or 14 Ga Galvanized Steel

TEK SCREW
1/4" X 3/4" Hex Washer Head
Self Drilling (4 per Hinge)

NOTE: The location of the intermediate hinges is indicated by the toggle lock dimples at the top of each section.

DETAIL D

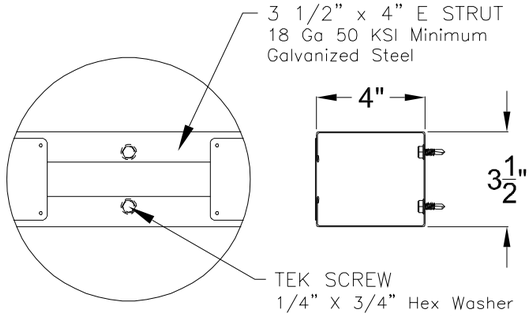

3 1/2" x 4" E STRUT
18 Ga 50 KSI Minimum
Galvanized Steel

4"

$3\frac{1}{2}$"

TEK SCREW
1/4" X 3/4" Hex Washer Head Self Drilling (2 per End & Intermediate Stiles)

DETAIL E

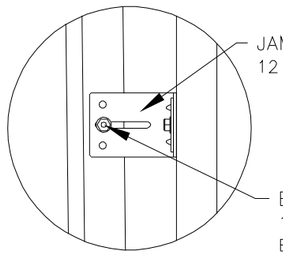

JAMB BRACKET
12 Ga Galvanized Steel

BOLT & NUT
1/4–20 X 5/8" Carriage Bolt & 1/4–20 Hex Washer Nut (1 per Jamb Bracket)

DETAIL F

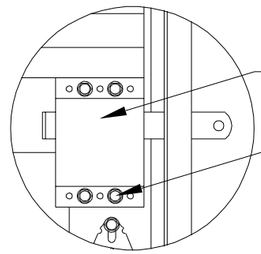

SLIDE LOCK or LOCK BARS (not required with operator)

TEK SCREW
1/4" X 3/4" Hex Washer Head Self Drilling (4 per Slide Lock)

DETAIL G

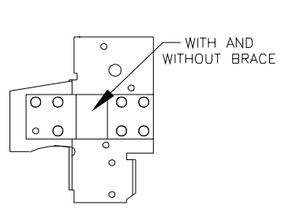

WITH AND WITHOUT BRACE

RESIDENTIAL & LIGHT COMMERCIAL
For Low Headroom With 2" Track and Single End Stiles

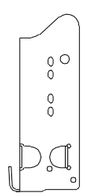

COMMERCIAL
For Standard, High & Vertical Lift With 2" Track and Single End Stiles

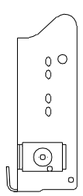

COMMERCIAL
For Standard, High & Vertical Lifte With 3" Track and Single End Stiles

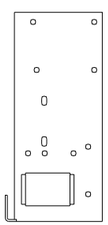

COMMERCIAL HEAVY DUTY
For Standard, High & Vertical Lift With 3" Track and Double End Stiles

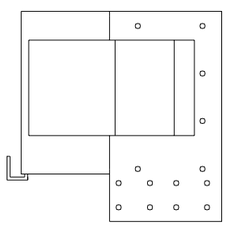

COMMERCIAL HEAVY DUTY
For Low Headroom With 3" Track and Double End Stiles

ALTERNATE BOTTOM BRACKETS

NOTE: The bottom bracket tested (shown in DETAIL C) is the lightest bracket available.

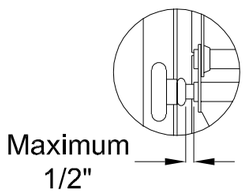

Maximum 1/2"

DETAIL K

There should be a space of maximum 1/2" between the roller hub and the outside edge of the roller holder which is set by the push nut.

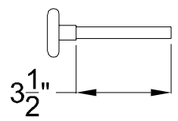

$3\frac{1}{2}$"

ROLLER

2" Diameter Nominal Eleven Ball Nylon or Ten Ball Steel with a Minimum Workable Shaft Length Shown.

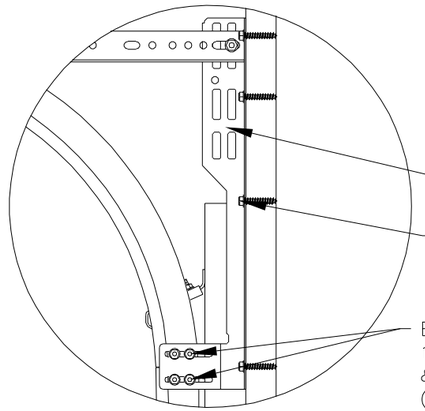

FLAG BRACKET

BOLT
5/16 X 1 5/8" Lag Bolt (4 per Flag Bracket).

BOLT & NUT
1/4–20 X 5/8" Track Bolt & 1/4–20 Hex Washer Nut (2 for Horizontal & 2 for Vertical Track)

DETAIL H

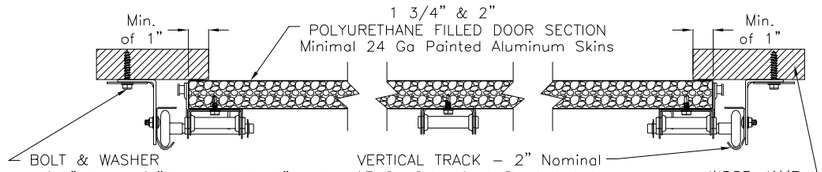

Min. of 1"

1 3/4" & 2" POLYURETHANE FILLED DOOR SECTION
Minimal 24 Ga Painted Aluminum Skins

Min. of 1"

BOLT & WASHER
5/16" X 1 5/8" Lag Bolt & 2" O.D. x 7/16" I.D. Flat Washer
NOTE: Jamb bracket must be in direct contact with the 2x6 (No drywall allowed).
NOTE: The flat washer is not required for angle mount.

VERTICAL TRACK – 2" Nominal 13 Ga Galvanized Steel tested. 3" Nominal 13 Ga is also approved as an alternate.

WOOD JAMB
The vertical wood jamb fasteners may be counter sunk to provide a flat mounting surface. See jamb attachment details on sheet 3 for attaching jambs to the structure.

NOTE: Details on some views omitted for clarity.
Double end stiles and end hardware may be provided on wider or heavier doors.

STATE OF TEXAS
JOHN E. SCATES
56308
LICENSED
PROFESSIONAL ENGINEER

John E Scates, P.E.
2560 King Arthur Blvd. Ste 124–54
Lewisville, Texas 75056
Texas P.E. 56308/F2203

IMPACT RESISTANT

Professional Engineer seal provided only for verification of wind load construction details.

Haas Door
A Nofziger Company

320 Sycamore
Wauseon, Ohio 43567
© Copyright 2014

DESCRIPTION:
18' 2" HT 5000 ALUMINUM SERIES
WIND LOAD SECTIONAL DOOR
DESIGN PRESSURE +30.0/-33.9 PSF

DRAWING NO.: WLTI-5000-0218-08-30-34		REV.
DATE DRN: 11/17/18	DRAWN BY: MVS	REV. DATE:
MODEL(S): See Sheet 3		SHEET: 2 OF 4

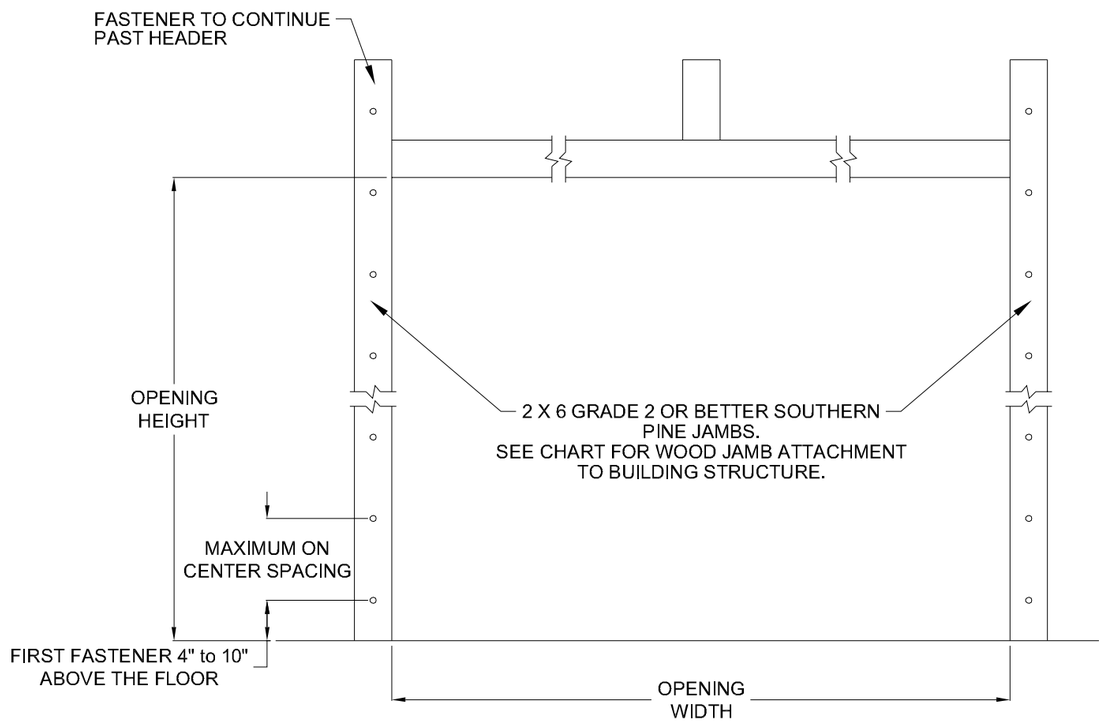

WOOD JAMB ATTACHMENT						
Building Structure	Fastener Type	Minimum Embedment	Minimum Edge Distance	Minimum on Center Spacing	Maximum on Center Spacing	Allowable Tension Load
Min. 2500 PSI to 4000 PSI Concrete	Tapcon + (PLUS) 1/4" w/ 1" OD washer	2"	2.50"	5.00"	24"	551
Southern Pine	3/8" Lag w/ 1 1/8" OD washer	1.50"	1.50"	1.50"	24"	620
Spruce Pine Fir	3/8" Lag w/ 1 1/8" OD washer	1.50"	1.50"	1.50"	21"	482

NOTE: 2X6 mounted to the wall must be Southern Pine Grade 2 or better.

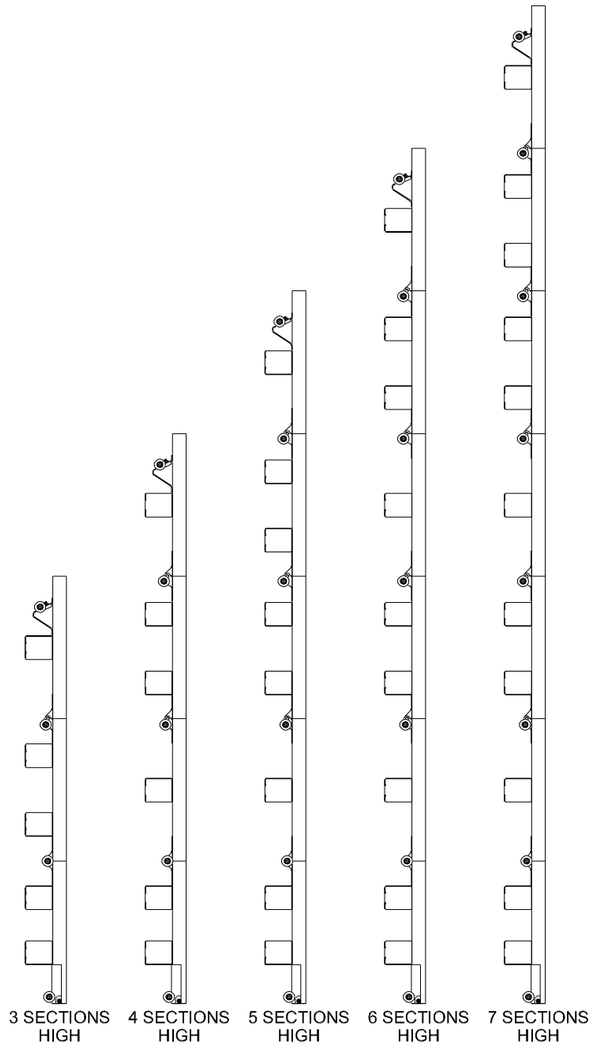

STRUT CONFIGURATION

MODEL NUMBERS

MODEL NUMBERS AVAILABLE
HT 5 _10 SERIES
HT 5 _12 SERIES
HT 5 _14 SERIES
HT 5 _16 SERIES
HT 5_70 SERIES
HT5 _80 SERIES

STATE OF TEXAS
JOHN E. SCATES
56308
LICENSED PROFESSIONAL ENGINEER

John E Scates, P.E.
2560 King Arthur Blvd. Ste 124-54
Lewisville, Texas 75056
Texas P.E. 56308/F2203

IMPACT RESISTANT

Professional Engineer seal provided only for verification of wind load construction details.

Haas Door
A Nofziger Company

320 Sycamore
Wauseon, Ohio 43567
© Copyright 2014

DESCRIPTION:
18' 2" HT 5000 ALUMINUM SERIES
WIND LOAD SECTIONAL DOOR
DESIGN PRESSURE +30.0/-33.9 PSF

DRAWING NO.: WLTI-5000-0218-08-30-34 **REV.**

DATE DRN: 11/17/18 **DRAWN BY:** MVS **REV. DATE:**

MODEL(S): See Sheet 3 **SHEET:** 3 **OF** 4

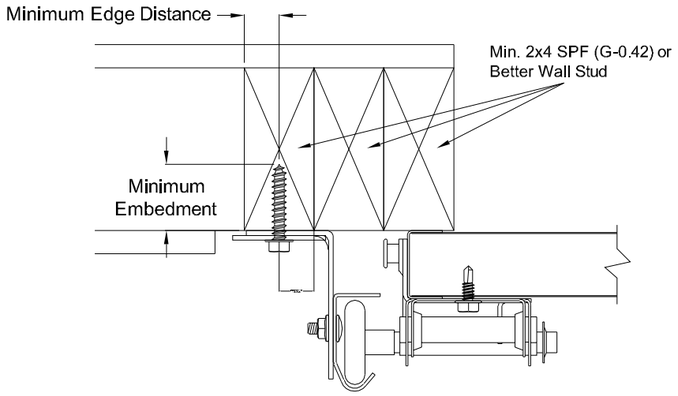

Direct Wood Mounting Detail

Bracket Mount Shown, Reverse and Continuous Angle Mount Also Approved As Alternate.

439 lbs. per anchor allowable load
5/16" Dia. Lag Screw w/1-1/8" O.D. Flat Washer (shall conform to ANSI/ASME standard B18.2.1)
Minimum Embedment: 1-1/2"
Minimum Edge Distance: 1/2"
Maximum on Center Spacing: 19"

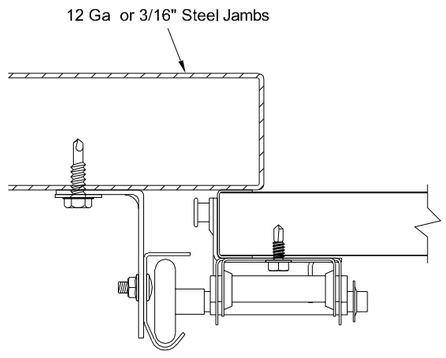

Direct Steel Mounting Detail

Bracket Mount Shown, Reverse and Continuous Angle Mount Also Approved As Alternate.

232 lbs. per anchor allowable load - 12 Ga Steel
569 lbs. per anchor allowable load - $\frac{3}{16}$" Steel
5/16"-12 Tek Self-Drilling Screw w/9/16" O.D. Flat Washer
12 Ga Maximum on Center Spacing: 10"
$\frac{3}{16}$" Maximum on Center Spacing: 24"

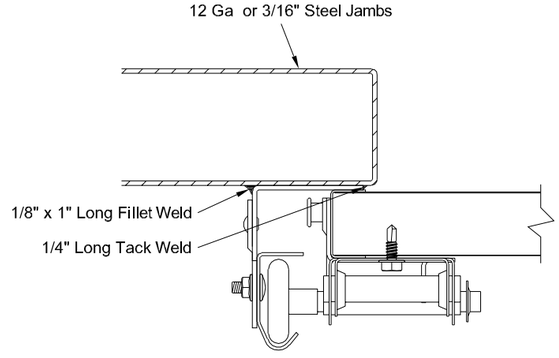

Direct Steel Mounting Detail

Reverse Continuous Angle Clip Mount Shown, Continuous Angle Mount Also Approved As Alternate.

1272 lbs. per anchor allowable load
1/8" Nom. x 1" Long Fillet and 1/4" Long Tack Weld (E60xx Electrodes Min.)
Welds performed by a certified welder or inspected by a certified welding inspector to verify integrity of the welds.
Maximum on Center Spacing: 24"

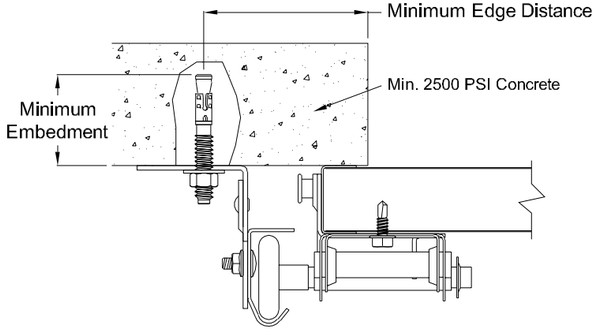

Direct Concrete Mounting Detail

Continuous Angle Clip Mount Shown, Bracket and Reverse Continuous Angle Mount Also Approved As Alternate.

831 lbs. per anchor allowable load
3/8" Dia. Ankr-Tite CCAT w/1-1/8" O.D. Flat Washer (by Wej-It Fastening Systems)
Minimum Embedment: 2-5/8"
Minimum Edge Distance: 2-1/2"
Minimum on Center Spacing: 6"
Maximum on Center Spacing: 24"

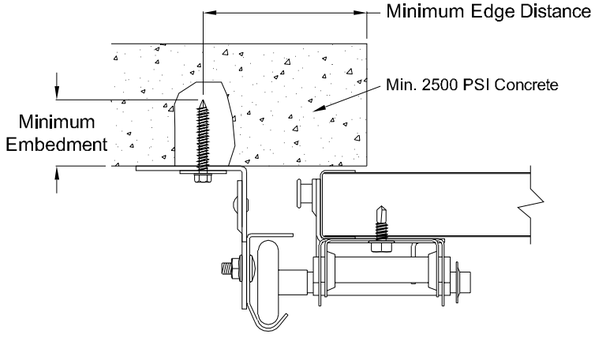

Direct Concrete Mounting Detail

Continuous Angle Clip Mount Shown, Bracket and Reverse Continuous Angle Mount Also Approved As Alternate.

562 lbs. per anchor allowable load
1/4" Dia. Concrete Self-Tapping & Wedge Anchor w/1" O.D. Flat Washer (Includes Tapcon+ (by ITW), Wedge-Bolt+ (by Powers Fasteners) & Red Head TruBolt wedge anchor (by ITW))
Minimum Embedment: 2"
Minimum Edge Distance: 2-1/2"
Minimum on Center Spacing: 5"
Maximum on Center Spacing: 24"

IMPACT RESISTANT

STATE OF TEXAS
JOHN E. SCATES
56308
LICENSED
PROFESSIONAL ENGINEER

John E Scates, P.E.
2560 King Arthur Blvd. Ste 124-54
Lewisville, Texas 75056
Texas P.E. 56308/F2203

Professional Engineer seal provided only for verification of wind load construction details.

Haas Door
A Nofziger Company

320 Sycamore
Wauseon, Ohio 43567
© Copyright 2014

DESCRIPTION:
18' 2" HT 5000 ALUMINUM SERIES
WIND LOAD SECTIONAL DOOR
DESIGN PRESSURE +30.0/-33.9 PSF

DRAWING NO.: WLTI-5000-0218-08-30-34		REV.
DATE DRN: 11/17/18	DRAWN BY: MVS	REV. DATE:
MODEL(S): See Sheet 3		SHEET: 4 OF 4