YKK AP AMERICA INC.

SERIES 35H ALUMINUM OUTSWING ENTRANCE DOOR (IMPACT)

INSTALLATION NOTES:

1. ONE (1) INSTALLATION ANCHOR IS REQUIRED AT EACH ANCHOR LOCATION SHOWN.
2. THE NUMBER OF INSTALLATION ANCHORS DEPICTED IS THE MINIMUM NUMBER OF ANCHORS TO BE USED FOR PRODUCT INSTALLATION.
3. INSTALL INDIVIDUAL INSTALLATION ANCHORS WITHIN A TOLERANCE OF ±1/2 INCH OF THE DEPICTED LOCATION IN THE ANCHOR LAYOUT DETAIL (I.E., WITHOUT CONSIDERATION OF TOLERANCES). TOLERANCES ARE NOT CUMULATIVE FROM ONE INSTALLATION ANCHOR TO THE NEXT.
4. SHIM AS REQUIRED AT EACH INSTALLATION ANCHOR WITH LOAD BEARING SHIM(S). MAXIMUM ALLOWABLE SHIM STACK TO BE 3/8 INCH. SHIM WHERE SPACE OF 1/16 INCH OR GREATER OCCURS. SHIM(S) SHALL BE CONSTRUCTED OF HIGH DENSITY PLASTIC OR BETTER.
5. FOR INSTALLATION INTO WOOD FRAMING USE #*14 WOOD SCREWS* OF SUFFICIENT LENGTH TO ACHIEVE 1 1/2 INCH MINIMUM EMBEDMENT INTO WOOD SUBSTRATE.
6. FOR INSTALLATION THROUGH 1X BUCK TO CONCRETE/MASONRY, OR DIRECTLY INTO CONCRETE/MASONRY, USE *1/4 INCH DIAMETER ITW TAPCONS* OF SUFFICIENT LENGTH TO ACHIEVE 1 1/4 INCH MINIMUM EMBEDMENT.
7. FOR INSTALLATION THROUGH METAL FRAME USE *1/4 INCH DIAMETER SELF-TAPPING SCREW* OF SUFFICIENT LENGTH TO ACHIEVE *3 THREADS* MINIMUM PENETRATION BEYOND METAL FRAME SUBSTRATE.
8. FOR INSTALLATION THROUGH ALUMINUM MULLION USE *1/4 INCH DIAMETER SELF-TAPPING SCREW* OF SUFFICIENT LENGTH TO ACHIEVE *3 THREADS* MINIMUM PENETRATION BEYOND ALUMINUM FRAME SUBSTRATE.
9. MINIMUM EMBEDMENT AND EDGE DISTANCE EXCLUDE WALL FINISHES, INCLUDING BUT NOT LIMITED TO STUCCO, FOAM, BRICK VENEER, AND SIDING.
10. INSTALLATION ANCHORS AND ASSOCIATED HARDWARE MUST BE MADE OF CORROSION RESISTANT MATERIAL OR HAVE A CORROSION RESISTANT COATING.
11. FOR HOLLOW BLOCK AND GROUT FILLED BLOCK, DO NOT INSTALL INSTALLATION ANCHORS INTO MORTAR JOINTS. EDGE DISTANCE IS MEASURED FROM FREE EDGE OF BLOCK OR EDGE OF MORTAR JOINT INTO FACE SHELL OF BLOCK.
12. INSTALLATION ANCHORS SHALL BE INSTALLED IN ACCORDANCE WITH ANCHOR MANUFACTURER'S INSTALLATION INSTRUCTIONS, AND ANCHORS SHALL NOT BE USED IN SUBSTRATES WITH STRENGTHS LESS THAN THE MINIMUM STRENGTH SPECIFIED BY THE ANCHOR MANUFACTURER.
13. INSTALLATION ANCHOR CAPACITIES FOR PRODUCTS HEREIN ARE BASED ON SUBSTRATE MATERIALS WITH THE FOLLOWING PROPERTIES:
    A. WOOD - MINIMUM SPECIFIC GRAVITY OF 0.42.
    B. CONCRETE -MINIMUM COMPRESSIVE STRENGTH OF 3000 PSI.
    C. MASONRY - STRENGTH CONFORMANCE TO ASTM C-90, GRADE N, TYPE 1 (OR GREATER) WITH MINIMUM COMPRESSIVE STRENGTH OF 2000 PSI.
    D. STEEL - MINIMUM YIELD STRENGTH OF 33 KSI. MINIMUM 18 GA. WALL THICKNESS.
    E. ALUMINUM - MINIMUM 1/16 INCH THICK 6063-T5 ALUMINUM.

GENERAL NOTES:

1. THE PRODUCT SHOWN HEREIN IS DESIGNED AND MANUFACTURED TO COMPLY WITH THE 2006 IRC/IBC AND TEXAS REVISIONS AND HAS BEEN EVALUATED ACCORDING TO THE FOLLOWING:
    - ASTM E330-02
    - TAS 201-94
    - TAS 202-94
    - TAS 203-94
2. ADEQUACY OF THE EXISTING STRUCTURAL CONCRETE/MASONRY, 2X FRAMING AND METAL STUD FRAMING AS A MAIN WIND FORCE RESISTING SYSTEM CAPABLE OF WITHSTANDING AND TRANSFERRING APPLIED PRODUCT LOADS TO THE FOUNDATION IS THE RESPONSIBILITY OF THE ENGINEER OR ARCHITECT OF RECORD FOR THE PROJECT OF INSTALLATION.
3. 1X AND 2X BUCKS (WHEN USED) SHALL BE DESIGNED AND ANCHORED TO PROPERLY TRANSFER ALL LOADS TO THE STRUCTURE. BUCK DESIGN AND INSTALLATION IS THE RESPONSIBILITY OF THE ENGINEER OR ARCHITECT OF RECORD FOR THE PROJECT OF INSTALLATION.
4. THE INSTALLATION DETAILS DESCRIBED HEREIN ARE GENERIC AND MAY NOT REFLECT ACTUAL CONDITIONS FOR A SPECIFIC SITE. IF SITE CONDITIONS CAUSE INSTALLATION TO DEVIATE FROM THE REQUIREMENTS DETAILED HEREIN, A LICENSED ENGINEER OR ARCHITECT SHALL PREPARE SITE SPECIFIC DOCUMENTS FOR USE WITH THIS DOCUMENT.
5. APPROVED IMPACT PROTECTIVE SYSTEM **IS NOT REQUIRED** ON THIS PRODUCT IN AREAS REQUIRING IMPACT RESISTANCE.
6. DOOR FRAME MATERIAL: ALUMINUM 6063-T5
7. GLASS MEETS THE REQUIREMENTS OF ASTM E 1300-04 GLASS CHARTS. SEE SHEET 13 & 14 FOR GLAZING DETAILS.
8. DOOR CONFIGURATIONS MAY UTILIZE BUTT HINGES AS DESCRIBED HEREIN OR CONTINUOUS HINGES INTERCHANGEABLY.
9. ALLOWABLE CONFIGURATIONS: X (SINGLE DOOR) OR XX (DOUBLE DOOR) WITH OR WITHOUT TRANSOMS.

TABLE OF CONTENTS

SHEET	SHEET DESCRIPTION
1	INSTALLATION & GENERAL NOTES
2	ELEVATIONS 1
3	ELEVATIONS 2 & QUALIFIED HINGE ASSEMBLIES
4	ELEVATIONS & ANCHOR LAYOUTS
5	VERTICAL SECTIONS 1
6	VERTICAL SECTIONS 2
7	VERTICAL SECTIONS 3
8	HORIZONTAL SECTIONS 1
9	HORIZONTAL SECTIONS 2
10	HORIZONTAL/VERTICAL SECTIONS
11	CURTAINWALL INSTALLATION & DOOR CORNER DETAILS
12	FRAME CORNER DETAILS
13	GLAZING DETAILS 1
14	GLAZING DETAILS 2
15	COMPONENTS & BILL OF MATERIALS
16	COMPONENTS (1)
17	COMPONENTS (2)
18	HINGE DETAILS (1)
19	HINGE DETAILS (2)

DESIGN PRESSURE TABLE

GLAZING TYPES	MAX. D.L.O. SIZE	MAX. DP	IMPACT RATING
A, B, C	38.75" X 82.75"	+90/-90 PSF	LMI & SMI
A1, B1, C1	38.75" X 82.75"	+70/-90 PSF	LMI & SMI
D, E	32.81" X 82.75"	+60/-60 PSF	LMI & SMI
D1, E1	32.81" X 82.75"	+50/-50 PSF	LMI & SMI
F, G, H	38.75" X 82.75"	+90/-90 PSF	SMI
F1, G1	38.75" X 82.75"	+70/-90 PSF	SMI

NOTE:
1. LMI - LARGE MISSILE IMPACT RATED
2. SMI - SMALL MISSILE IMPACT RATED
3. SEE SHEETS 12 & 13 FOR GLAZING DETAILS
4. SEE SHEETS 2-4 FOR LIMITATIONS ON DESIGN PRESSURE BASED ON SIZE AND LOCKING HARDWARE

Digitally signed by Hermes F Norero, P.E.
Reason: I am approving this document
Date: 2015.12.13 17:29:43 -05'00'

YKK AP AMERICA INC.
332 FIRETOWER ROAD
DUBLIN, GEORGIA 31021
PH: (478) 277-2549 FX: (678) 838-6001

TITLE: SERIES 35H ALUMINUM OUTSWING ENTRANCE DOOR
INSTALLATION & GENERAL NOTES

PREPARED BY:
BUILDING DROPS, INC.
398 E. DANIA BEACH BLVD. #338
DANIA BEACH, FL 33004
PH: (954) 399-8478 FX: (954) 744-4738

REVISIONS

NO.	DESCRIPTION	BY	DATE

STATE OF TEXAS — HERMES F NORERO — 118471 — LICENSED PROFESSIONAL ENGINEER

DATE:	DWN BY:	CHK BY:	SCALE:
09.17.14	SM	MSS	NTS

DWG #: YKK042

SHEET: 1 OF 19

2/16/2015 5:13 PM
s:\projects\ykk ap america, inc\tdi-14-0810 proposal for tdi submittal - commercial products\35h & 50 h (f1166549)\dwg\YKK042 - 35h.dwg

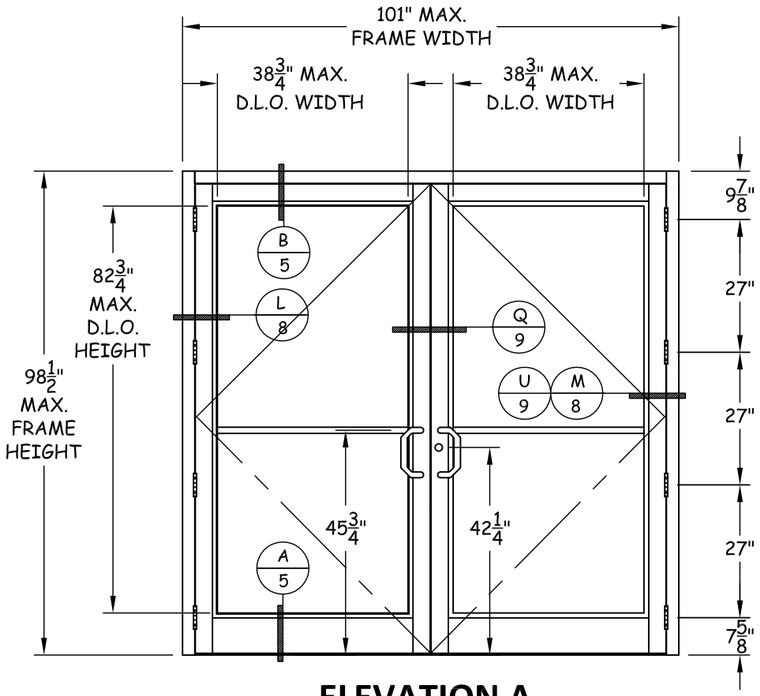

ELEVATION A

STANDARD 5-POINT LOCK

ELEVATION A	
QUALIFIED LOCKING HARDWARE	DESIGN PRESSURE
ADAMS RITE MS 1850 WITH MS 4015 AND MS 4016 TOP AND BOTTOM BOLTS	+/- 90 PSF
ADAMS RITE MS 1880	
ADAMS RITE MS 1850 WITH MS 4015 AND MS 4016 TOP AND BOTTOM BOLTS	+70/-90 PSF
ADAMS RITE MS 2180	

ELEVATION B	
QUALIFIED LOCKING HARDWARE	DESIGN PRESSURE
SARGENT 8500 RIM PANIC WITH REMOVABLE MULLION	+/- 60 PSF
VON DUPRIN 98/99 SERIES RIM PANIC WITH REMOVABLE MULLION	+50/-50 PSF
VON DUPRIN 33A/35A SERIES RIM PANIC WITH REMOVABLE MULLION	
SARGENT 8500 RIM PANIC WITH REMOVABLE MULLION	+/- 60 PSF
CORBIN RUSSWIN ED4200 RIM EXIT DEVICE WITH REMOVABLE MULLION	
YALE 7250M EXIT DEVICE WITH REMOVABLE MULLION	

NOTE: RIM PANIC EXIT DEVICES WITH REMOVABLE MULLION ARE NOT FOR USE WITH AIR/WATER RATER THRESHOLD.

NOTES:
1) WHEN AIR/WATER THRESHOLD IS UTILIZED, MAX. DOOR FRAME HEIGHT MAY INCREASE TO 99-7/8". SEE DETAIL D, PAGE 5 AND DETAIL K, PAGE 7.
2) SINGLE AND DOUBLE DOORS ARE QUALIFIED SUCH THAT SINGLE DOOR UTILIZES HARDWARE FROM ACTIVE DOOR PANEL.
3) ADDITIONAL QUALIFIED PANEL CONFIGURATIONS CAN BE FOUND ON PAGE 4.
4) SEE SHEET 7 DESIGN PRESSURE LIMITATIONS BASED ON WATER INFILTRATION REQUIREMENTS.

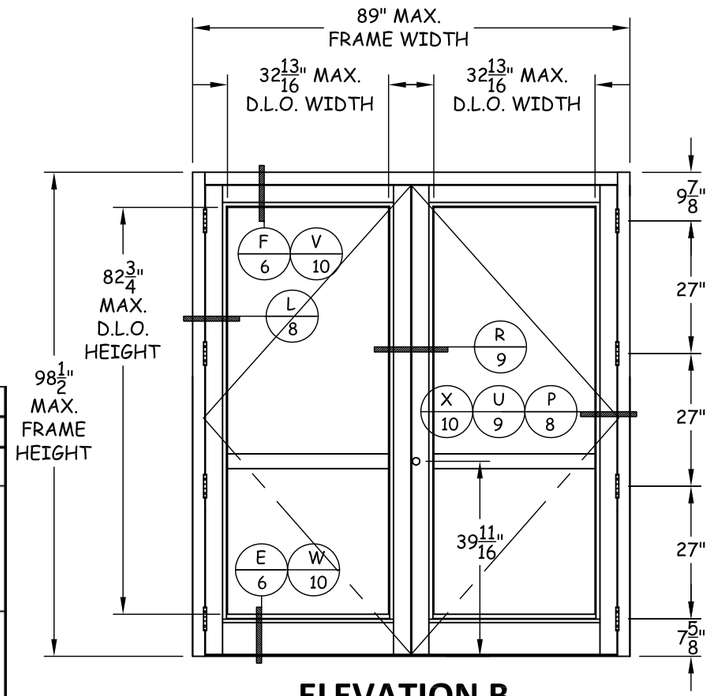

ELEVATION B

RIM PANIC WITH REMOVABLE MULLION

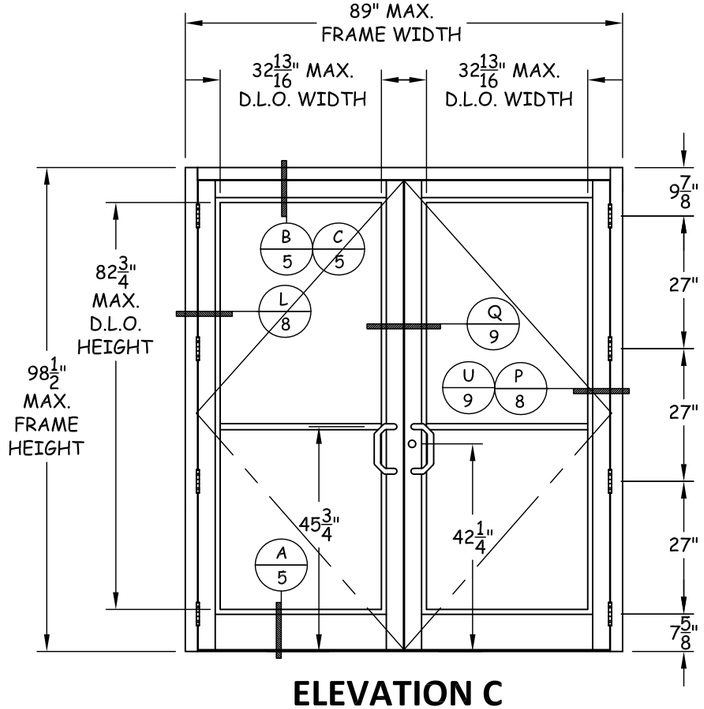

ELEVATION C

SINGLE POINT WITH FLUSHBOLTS

ELEVATION C	
QUALIFIED LOCKING HARDWARE	DESIGN PRESSURE
SINGLE POINT MS 1850 ON ACTIVE WITH FLUSHBOLTS INACTIVE	+/- 50 PSF

ELEVATION D	
QUALIFIED LOCKING HARDWARE	DESIGN PRESSURE
FALCON DOR-O-MATIC 1490	+/- 60 PSF
VON DUPRIN 9947F CVR EXIT DEVICE W/ 3/16" SHIM BETWEEN DOOR & DEVICE	+/- 50 PSF

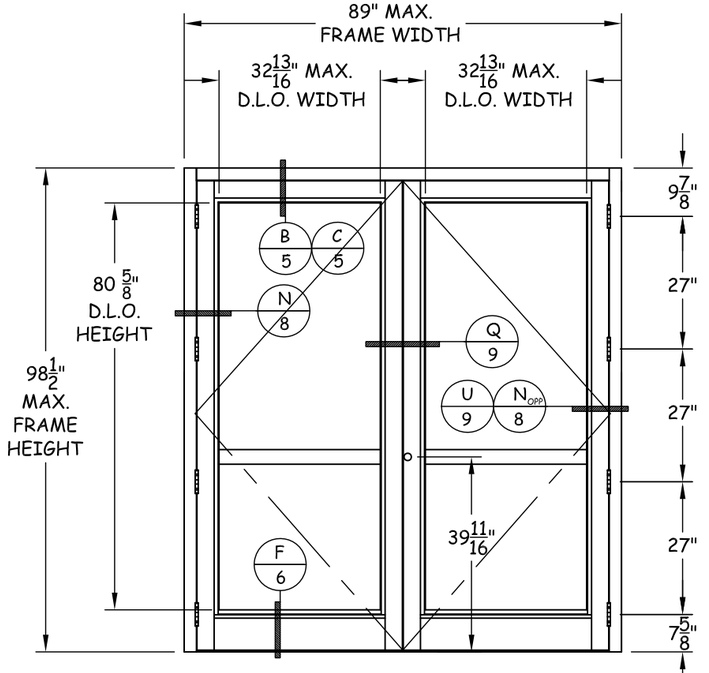

ELEVATION D

CONCEALED VERTICAL ROD

YKK AP AMERICA INC.
332 FIRETOWER ROAD
DUBLIN, GEORGIA 31021
PH: (478) 277-2549 FX: (678) 838-6001

TITLE: SERIES 35H ALUMINUM OUTSWING ENTRANCE DOOR ELEVATIONS 1

PREPARED BY:
BUILDING DROPS, INC.
398 E. DANIA BEACH BLVD. #338
DANIA BEACH, FL 33004
PH: (954) 399-8478 FX: (954) 744-4738

REVISIONS

NO.	DESCRIPTION	BY	DATE

STATE OF TEXAS
HERMES F. NORERO
118471
PROFESSIONAL ENGINEER
HERMES NORERO, P.E.
TEXAS LICENSE NO. 118471
DANIA BEACH, FL 33004
TELE. (954) 399-8478

DATE:	DWN BY:	CHK BY:	SCALE:
09.17.14	SM	MSS	NTS

DWG #: YKK042

SHEET: 2 OF 19

2/16/2015 5:13 PM

s:\projects\ykk ap america, inc\tdi-14-0810 proposal for tdi submittal - commercial products\35h & 50 h (f116654)\dwg\ykk042 - 35h.dwg

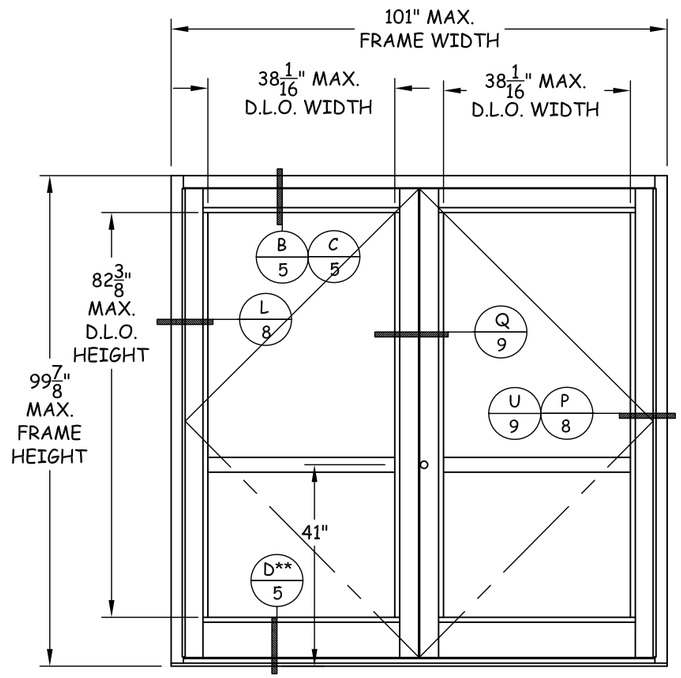

ELEVATION E
CVR EXIT DEVICE

ELEVATION E	
QUALIFIED LOCKING HARDWARE	DESIGN PRESSURE
SARGENT 8400 CVR EXIT DEVICE	+/- 90 PSF
FIRST CHOICE 3690 CVR EXIT DEVICE	
DOR-O-MATIC 1490 CVR EXIT DEVICE	+70/- 90 PSF
DOR-O-MATIC 1690 CVR EXIT DEVICE	

ELEVATION F	
QUALIFIED LOCKING HARDWARE	DESIGN PRESSURE
DOR-O-MATIC 2390 MID-PANEL EXIT DEVICE	+ 70/- 90 PSF

NOTES:
1) WHEN AIR/WATER THRESHOLD IS UTILIZED, MAX. DOOR FRAME HEIGHT MAY INCREASE TO 99-7/8". SEE DETAIL D, PAGE 5 AND DETAIL K, PAGE 7.
2) SINGLE AND DOUBLE DOORS ARE QUALIFIED SUCH THAT SINGLE DOOR UTILIZES HARDWARE FROM ACTIVE DOOR PANEL.
3) ADDITIONAL QUALIFIED PANEL CONFIGURATIONS CAN BE FOUND ON PAGE 4.
4) SEE SHEET 7 DESIGN PRESSURE LIMITATIONS BASED ON WATER INFILTRATION REQUIREMENTS.

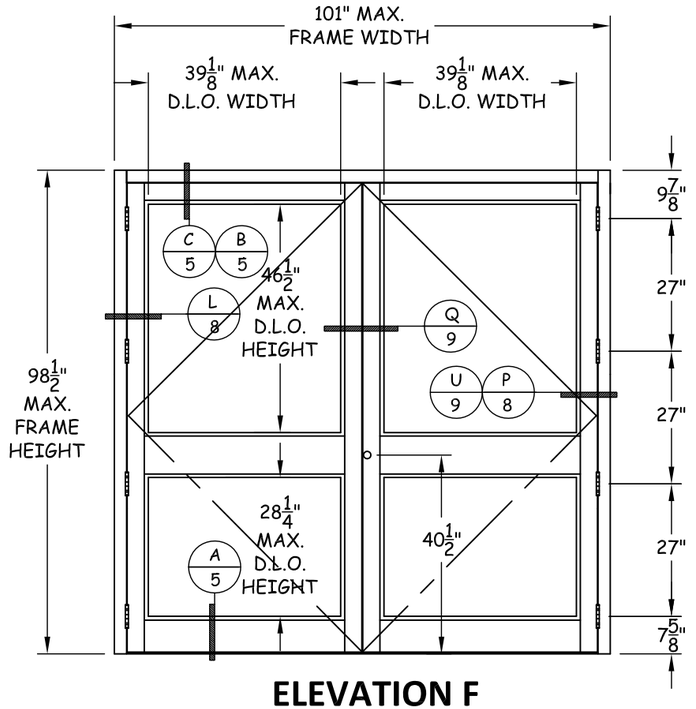

ELEVATION F
MID-PANEL EXIT DEVICE

**NOTE: AIR TIGHT THRESHOLD (ITEM #13) MAY BE USED IN LIEU OF AIR/WATER THRESHOLD WHEN UTILIZED WITH CONCEALED VERTICAL ROD DEVICES

QUALIFIED HINGE ASSEMBLIES

HINGE TYPE	DESCRIPTION	Max. Frame Size	Design Pressure
BUTT HINGE	***FOUR (4) HAGER BB1191 BUTT HINGES PER DOOR LEAF	101" x 98 1/2"	+90/-90 PSF
BUTT HINGE	***FOUR (4) MCKINNEY TA2714 BUTT HINGES PER DOOR LEAF	101" x 98 1/2"	+90/-90 PSF
CONTINUOUS HINGE	ONE (1) ROTON 780-226HD CONTINUOUS GEARED HINGE PER DOOR LEAF	101" x 98 1/2"	+90/-90 PSF
CONTINUOUS HINGE	ONE (1) SELECT 27HD CONTINUOUS GEARED HINGE PER DOOR LEAF	101" x 98 1/2"	+90/-90 PSF
PIVOT	RISON PIVOT HINGES 180 AT TOP, M-19 AT INTERMEDIATE, & 147 AT BOTTOM	101" x 98 1/2"	+90/-90 PSF

***NOTE: IF DOOR HEIGHT IS LESS THAN 90" AND DOOR WIDTH IS EQUAL TO OR LESS THAN 36", THEN ONE INTERMEDIATE BUTT HINGE AT MIDSPAN IS REQUIRED BETWEEN TOP & BOTTOM BUTT HINGES

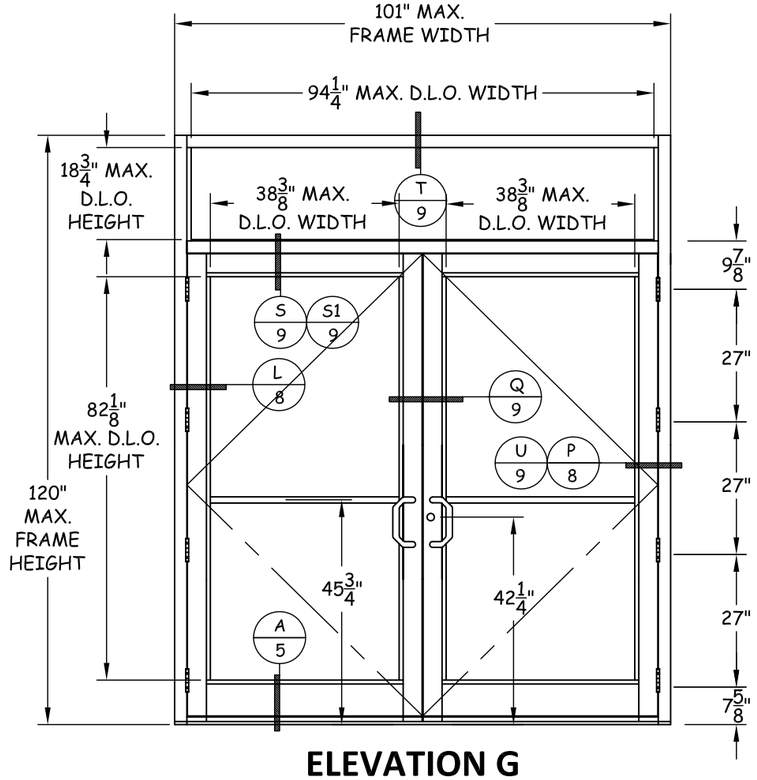

ELEVATION G
DOUBLE DOOR WITH TRANSOM

ELEVATION G	
QUALIFIED LOCKING HARDWARE	DESIGN PRESSURE
SEE ELEVATIONS A-F & H-I FOR ALLOWABLE LOCKING HARDWARE SYSTEMS.	*NOT TO EXCEED +70/-90 PSF

*ELEVATION G NOTES:
1. FOR TRANSOM MULLION DETAIL S/9.
   - A. MAX. DESIGN PRESSURE NOT TO EXCEED +70/-65 PSF WHEN MONO-LAMI GLAZINGS ARE UTILIZED (MULL ITEM# 51).
   - B. DESIGN PRESSURE NOT TO EXCEED +70/-70 PSF WHEN INSULATED LAMINATED GLAZINGS ARE UTLILIZED (MULL ITEM# 52).
   - C. LESSER DESIGN PRESSURE OF THOSE STATED ABOVE (1.A & 1.B) OR THOSE FOUND ON SHEET 1 SHALL GOVERN.
2. FOR TRANSOM MULLION DETAIL S1/9.
   - A. MAX. DESIGN PRESSURE NOT TO EXCEED +70/-70 PSF WHEN MONO-LAMI GLAZINGS ARE UTILIZED (MULL ITEM# 61).
   - B. DESIGN PRESSURE NOT TO EXCEED +70/-90 PSF WHEN INSULATED LAMINATED GLAZINGS ARE UTILIZED (MULL ITEM# 62).
   - C. LESSER DESIGN PRESSURE OF THOSE STATED ABOVE (2.A & 2.B) OR THOSE FOUND ON SHEET 1 SHALL GOVERN.
3. LESSER DESIGN PRESSURE OF THAT SHOWN IN TABLE ABOVE, OR THAT INDICATED IN CORRESPONDING TABLE FOR HARDWARE SHALL GOVERN.
4. MAX. DOOR SIZES FOR A GIVEN HARDWARE AS INDICATED IN ELEVATIONS A-F & H-I SHALL GOVERN MAX. SIZE OF ASSEMBLY. ASSEMBLY IS TO NOT EXCEED DIMENSIONS AS SHOWN IN ELEVATION G.

YKK AP AMERICA INC.
332 FIRETOWER ROAD
DUBLIN, GEORGIA 31021
PH: (478) 277-2549 FX: (678) 838-6001

TITLE: SERIES 35H ALUMINUM OUTSWING ENTRANCE DOOR ELEVATIONS 2 & QUALIFIED HINGE ASSEMBLIES

PREPARED BY:
BUILDING DROPS, INC.
398 E. DANIA BEACH BLVD. #338
DANIA BEACH, FL 33004
PH: (954) 399-8478 FX: (954) 744-4738

REVISIONS

NO.	DESCRIPTION	BY	DATE

STATE OF TEXAS
HERMES F. NORERO
118471
PROFESSIONAL ENGINEER
HERMES F. NORERO, P.E.
STATE OF TEXAS LICENSE NO. 118471
398 E. DANIA BEACH BLVD. #338
DANIA BEACH, FL 33004
(954) 399-8478

DATE: 09.17.14
DWN BY: SM
CHK BY: MSS
SCALE: NTS

DWG #: YKK042

SHEET: 3 OF 19

2/16/2015 5:13 PM

s:\projects\ykk ap america, inc\1di-14-0810 proposal for tdi submittal - commerical products\35h & 50 h (f116654)\dwg\ykk042 - 35h.dwg

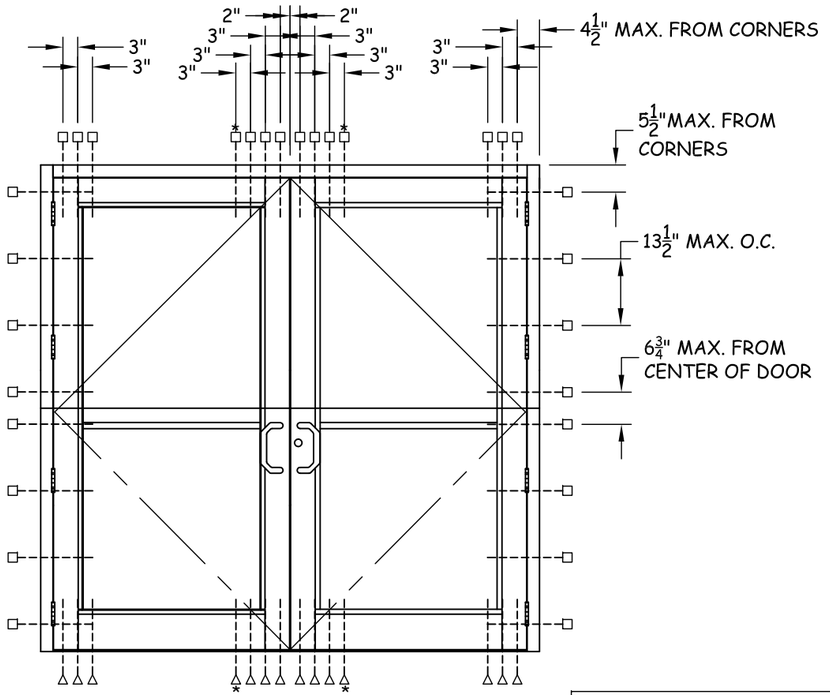

ANCHOR LAYOUT
FOR ELEVATIONS A-F & I

*TWO (2) LESS ANCHORS ARE REQUIRED AT HEAD & SILL FOR DESIGN PRESSURES OF +/- 60 PSF OR LESS.

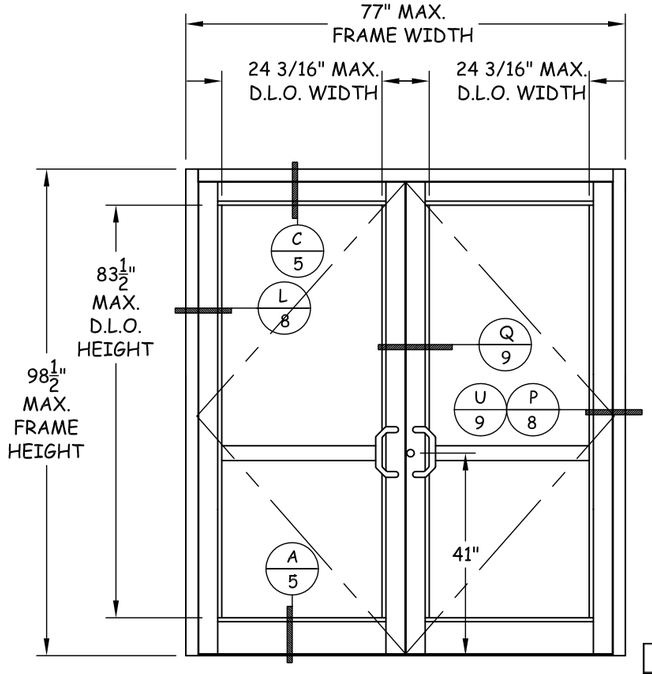

ELEVATION I
CVR EXIT DEVICE

ELEVATION I	
QUALIFIED LOCKING HARDWARE	DESIGN PRESSURE
VON DUPRIN 3347 CONCEALED VERTICAL ROD	+ 70/- 48 PSF

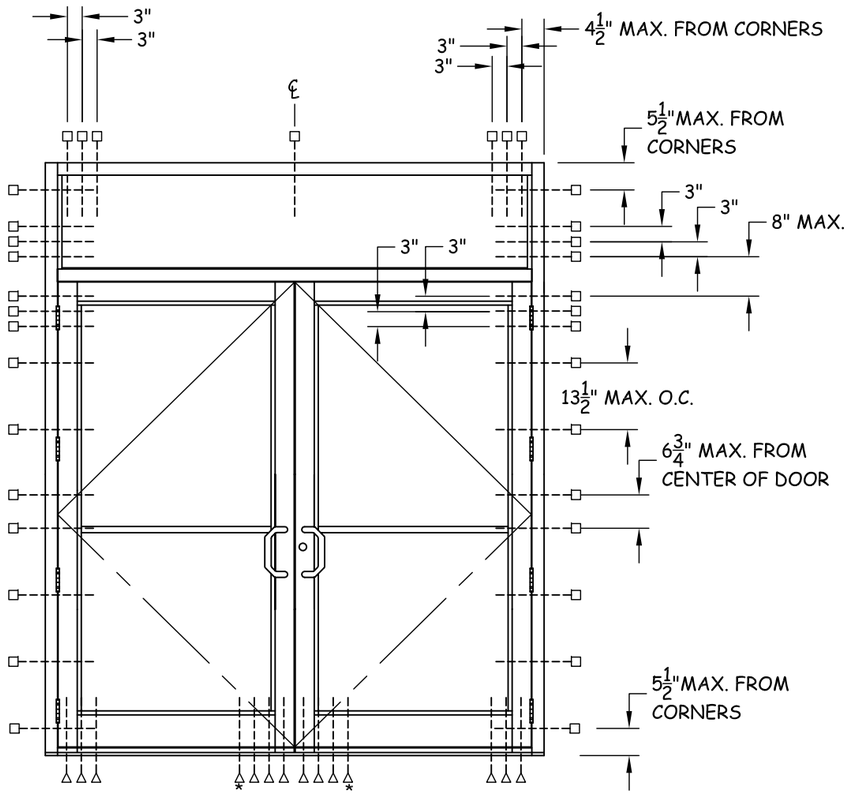

ANCHOR LAYOUT
FOR ELEVATION G

*TWO (2) LESS ANCHORS ARE REQUIRED AT SILL FOR DESIGN PRESSURES OF +/- 60 PSF OR LESS.

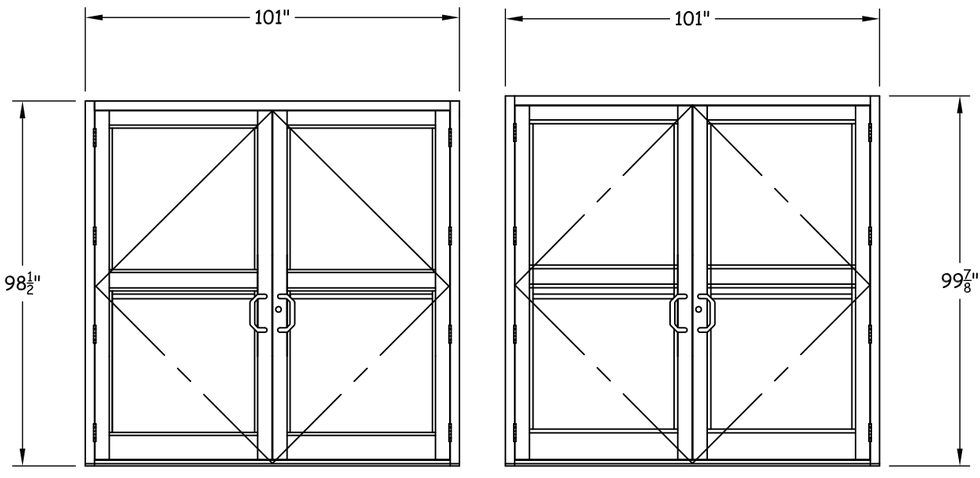

MIDRAILS

MIDRAILS WITH AIR/WATER THRESHOLD

QUALIFIED PANEL CONFIGURATIONS

YKK AP AMERICA INC.
332 FIRETOWER ROAD
DUBLIN, GEORGIA 31021
PH: (478) 277-2549 FX: (678) 838-6001

TITLE: SERIES 35H ALUMINUM OUTSWING ENTRANCE DOOR
ELEVATIONS & ANCHOR LAYOUTS

PREPARED BY:
BUILDING DROPS, INC.
398 E. DANIA BEACH BLVD. #338
DANIA BEACH, FL 33004
PH: (954) 399-8478 FX: (954) 744-4738

REVISIONS

NO.	DESCRIPTION	BY	DATE

HERMES F. NORERO 118471 STATE OF TEXAS PROFESSIONAL ENGINEER

DATE:	DWN BY:	CHK BY:	SCALE:
09.17.14	SM	MSS	NTS

DWG #: YKK042

SHEET: 4 OF 19

2/16/2015 5:13 PM
s:\projects\ykk ap america, inc\tdi-14-0810 proposal for tdi submittal - commerical products\35h & 50 h (f116654)\dwg\ykk042 - 35h.dwg

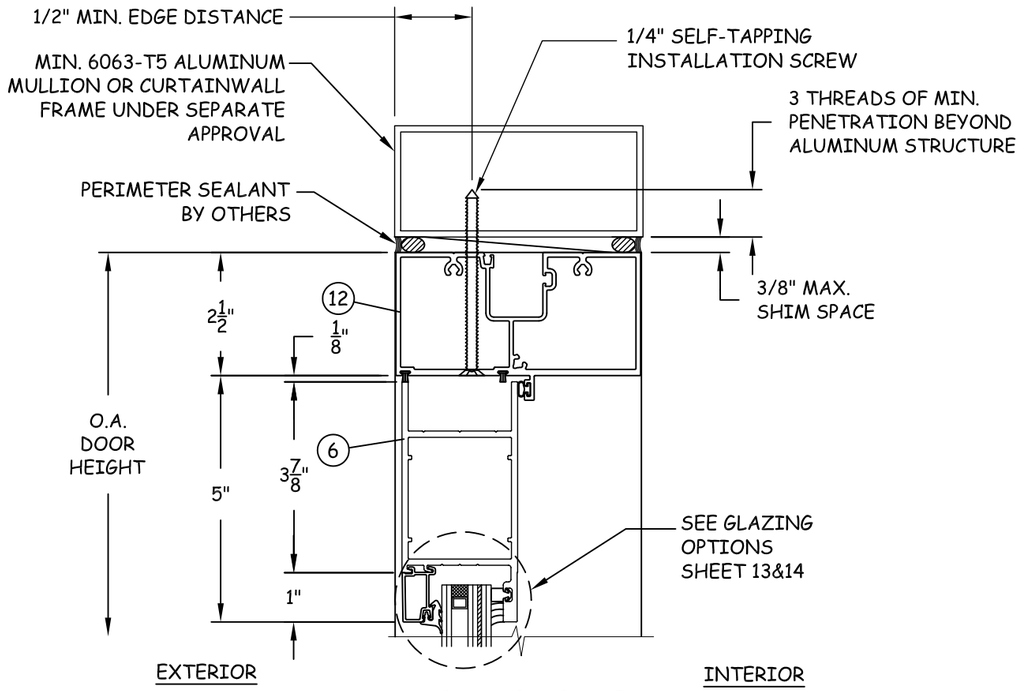

B/5 VERTICAL SECTION

HEAD - ALUMINUM MULLION

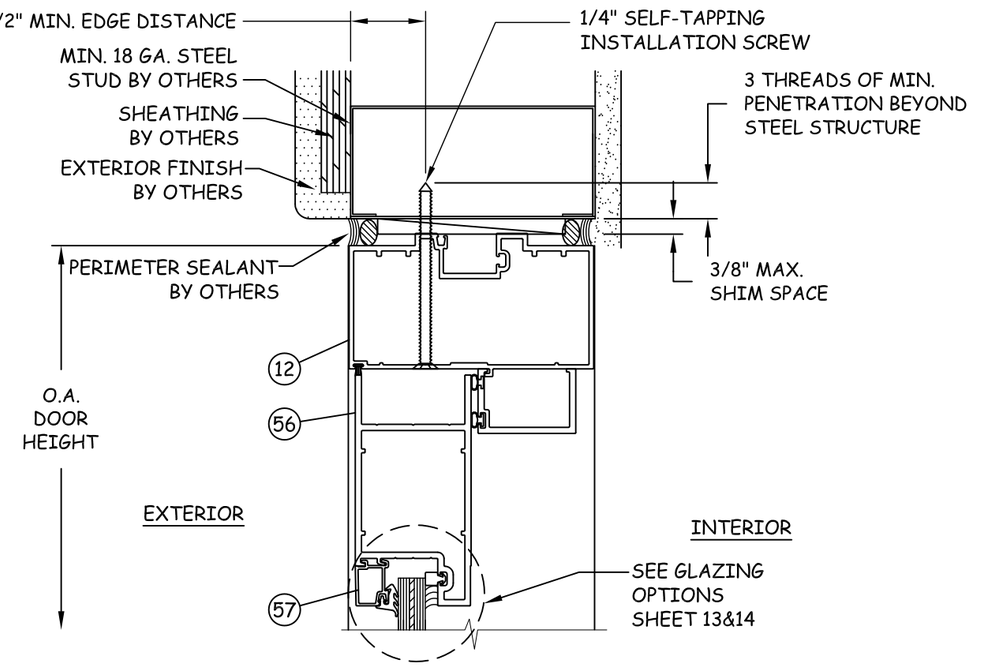

C/5 VERTICAL SECTION

OHCC HEAD (OPTIONAL) - STEEL STUD

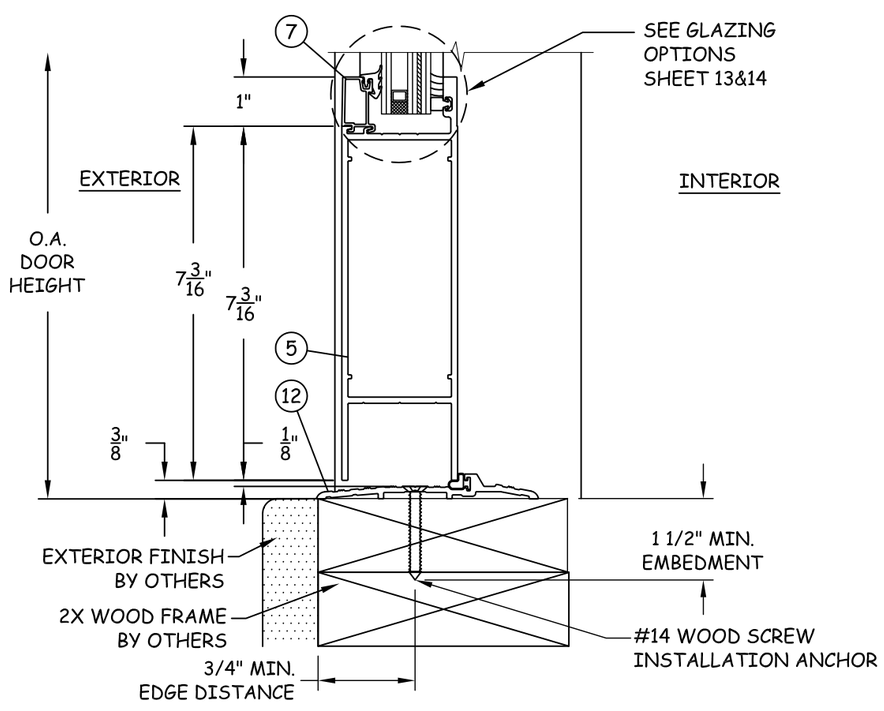

A/5 VERTICAL SECTION

SILL - 2X WOOD FRAME

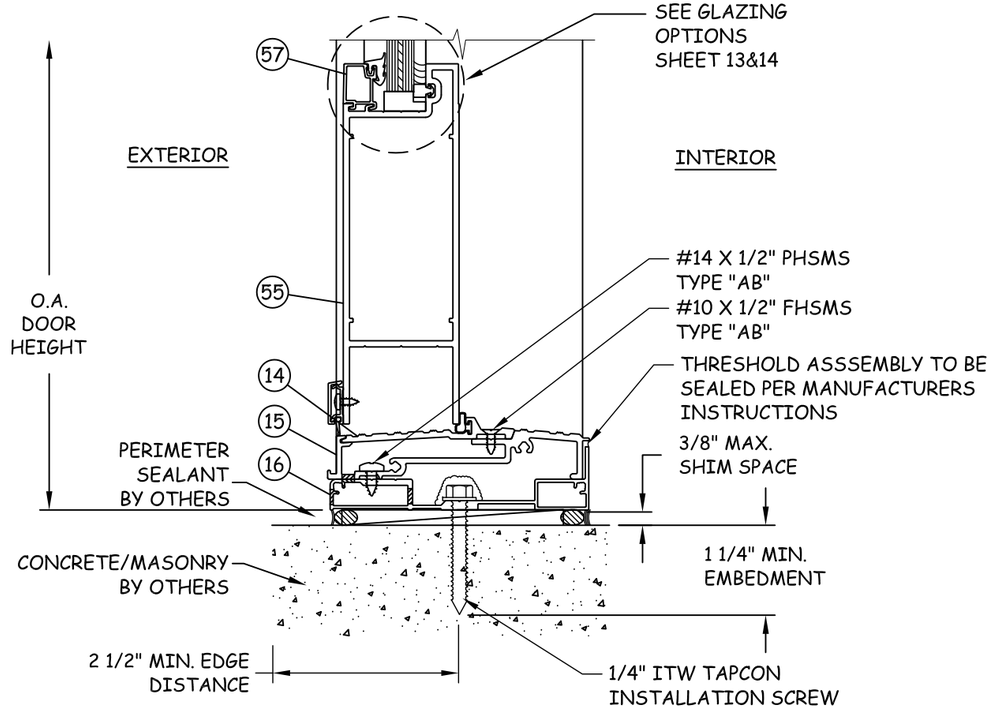

D/5 VERTICAL SECTION

SILL - CONCRETE/MASONRY

YKK AP AMERICA INC.
332 FIRETOWER ROAD
DUBLIN, GEORGIA 31021
PH: (478) 277-2549 FX: (678) 838-6001

TITLE: SERIES 35H ALUMINUM OUTSWING ENTRANCE DOOR
VERTICAL SECTIONS 1

PREPARED BY:
BUILDING DROPS, INC.
398 E. DANIA BEACH BLVD. #338
DANIA BEACH, FL 33004
PH: (954) 399-8478 FX: (954) 744-4738

REVISIONS

NO.	DESCRIPTION	BY	DATE

HERMES F. NORERO 118471 LICENSED PROFESSIONAL ENGINEER STATE OF TEXAS

DATE:	DWN BY:	CHK BY:	SCALE:
09.17.14	SM	MSS	NTS

DWG #: YKK042

SHEET: 5 OF 19

2/16/2015 5:13 PM
s:\projects\ykk ap america, inc\tdi-14-0810 proposal for tdi submittal - commercial products\35h & 50 h (f116654)\dwg\ykk042 - 35h.dwg

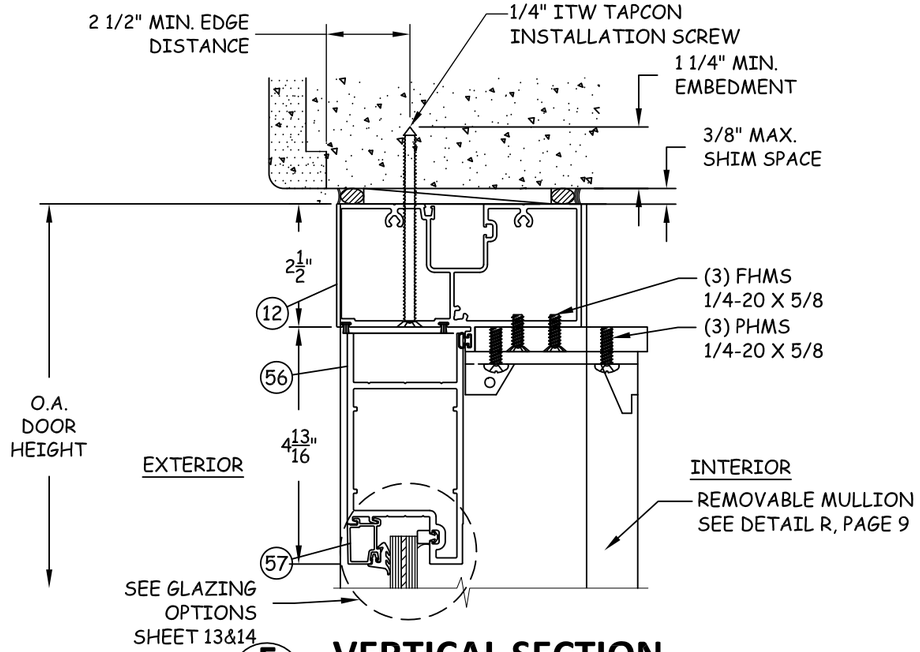

F/6 VERTICAL SECTION

HEAD - CONCRETE/MASONRY REMOVABLE MULLION

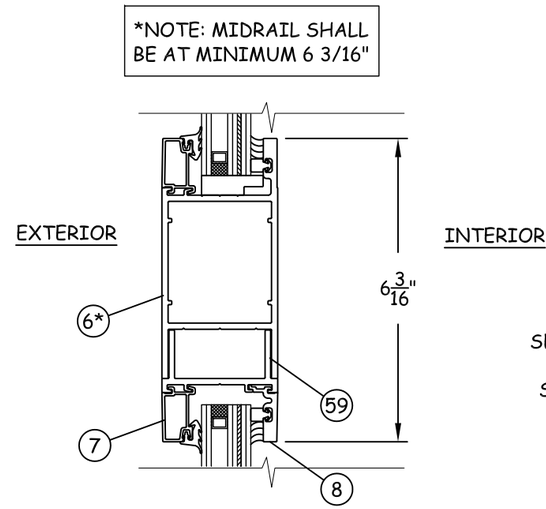

G/6 VERTICAL SECTION

6" MIDRAIL

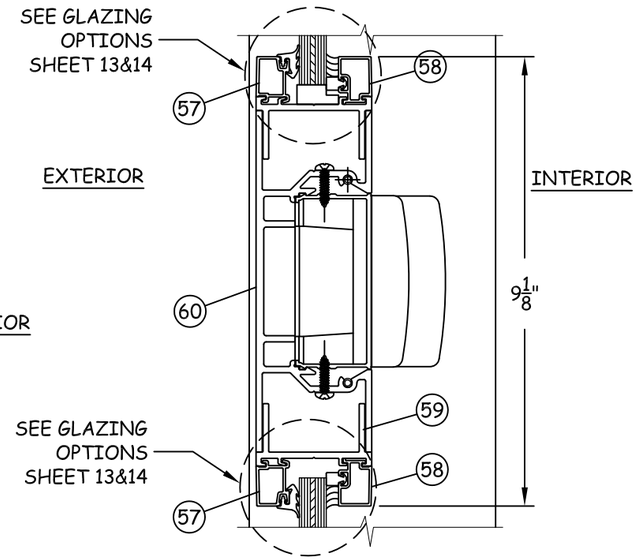

H/6 VERTICAL SECTION

MID-PANEL EXIT DEVICE PANIC MIDRAIL

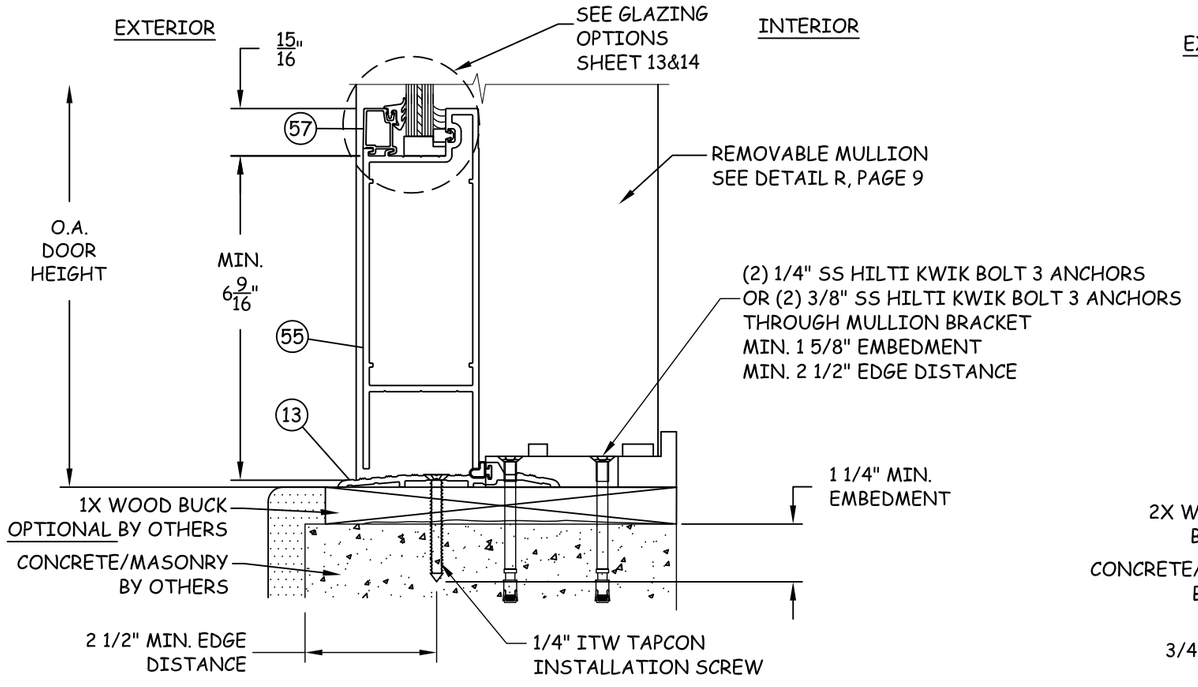

E/6 VERTICAL SECTION

SILL - CONCRETE/MASONRY REMOVABLE MULLION

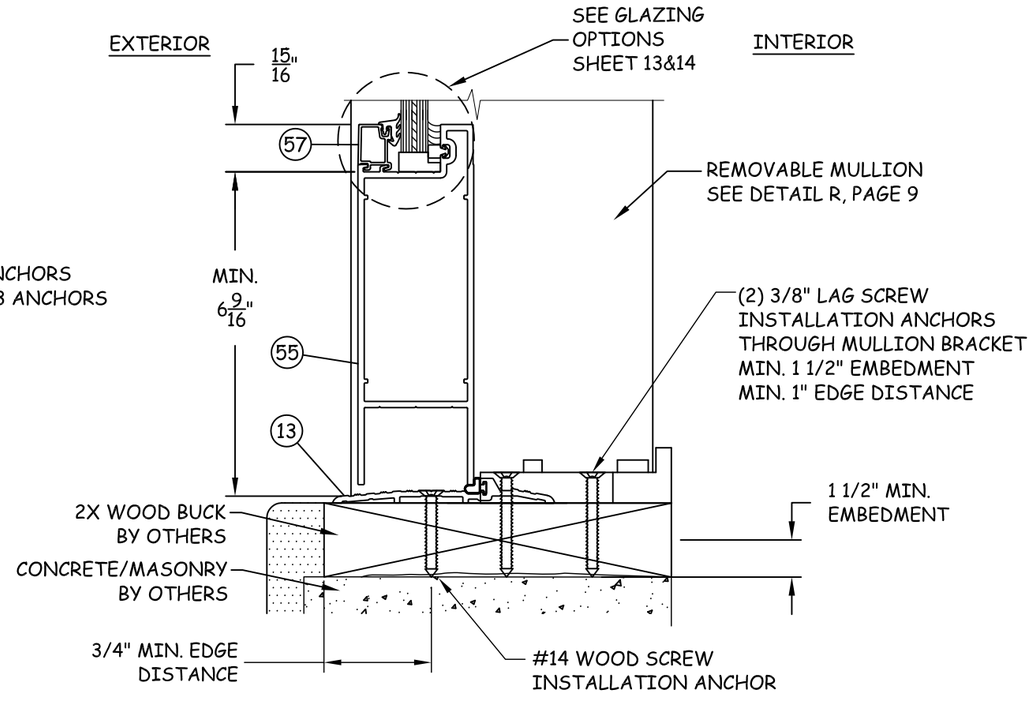

E1/6 VERTICAL SECTION

SILL - 2X WOOD BUCK REMOVABLE MULLION

YKK AP AMERICA INC.
332 FIRETOWER ROAD
DUBLIN, GEORGIA 31021
PH: (478) 277-2549 FX: (678) 838-6001

TITLE: SERIES 35H ALUMINUM OUTSWING ENTRANCE DOOR

VERTICAL SECTIONS 2

PREPARED BY:
BUILDING DROPS, INC.
398 E. DANIA BEACH BLVD. #338
DANIA BEACH, FL 33004
PH: (954) 399-8478 FX: (954) 744-4738

REVISIONS

NO.	DESCRIPTION	BY	DATE

STATE OF TEXAS
HERMES F. NORERO
118471
PROFESSIONAL ENGINEER

DATE: 09.17.14
DWN BY: SM
CHK BY: MSS
SCALE: NTS

DWG #: YKK042

SHEET: 6 OF 19

2/16/2015 5:13 PM

s:\projects\ykk ap america, inc\tdi-14-0810 proposal for tdi submittal - commerical products\35h & 50 h (fl16654)\dwg\ykk042 - 35h.dwg

THRESHOLD WATER INFILTRATION AND DESIGN PRESSURE LIMITATIONS

THRESHOLD DESCRIPTION	ITEM #	TYP. DETAILS	WATER TEST PRESSURE	LIMITATIONS
4 1/2" AIR TIGHT THRESHOLD	ITEM # 13	SEE TYP. DETAILS A/5, E/6, & J/7	0 PSF	THRESHOLD SHALL BE USED WHERE WATER INFILTRATION RATING IS NOT REQUIRED OR WHERE WATER INFILTRATION IS REQUIRED, A MINIMUM OVERHANG RATIO (OVERHANG PROJECTION:OVERHANG HEIGHT) SHALL BE EQUAL TO OR GREATER THAN 1. POSITIVE DESIGN LOAD NOT TO EXCEED +90 PSF.
AIR/WATER RESISTANT THRESHOLD	ITEMS #14, #15, & #16	SEE TYP. DETAILS D/5 & K/7	10.5 PSF	• WHERE WATER INFILTRATION IS REQUIRED, POSITIVE DESIGN LOAD SHALL NOT EXCEED +70 PSF. • WHERE WATER INFILTRATION IS REQUIRED, AND A MINIMUM OVERHANG RATIO (OVERHANG PROJECTION:OVERHANG HEIGHT) EQUAL TO OR GREATER THAN 1 IS PRESENT, POSITIVE DESIGN LOAD SHALL NOT EXCEED +90 PSF. • WHERE WATER INFILTRATION IS NOT REQUIRED, POSITIVE DESIGN LOAD NOT TO EXCEED +90 PSF.

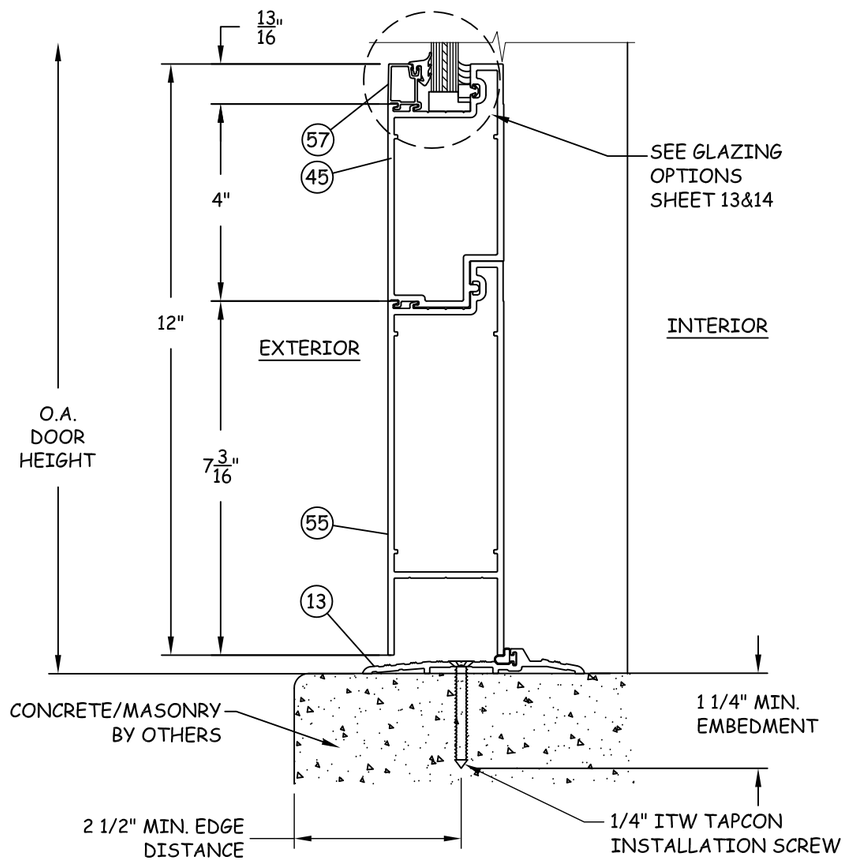

J/7 **VERTICAL SECTION**

SILL - CONCRETE/MASONRY
STACKED BOTTOM RAIL

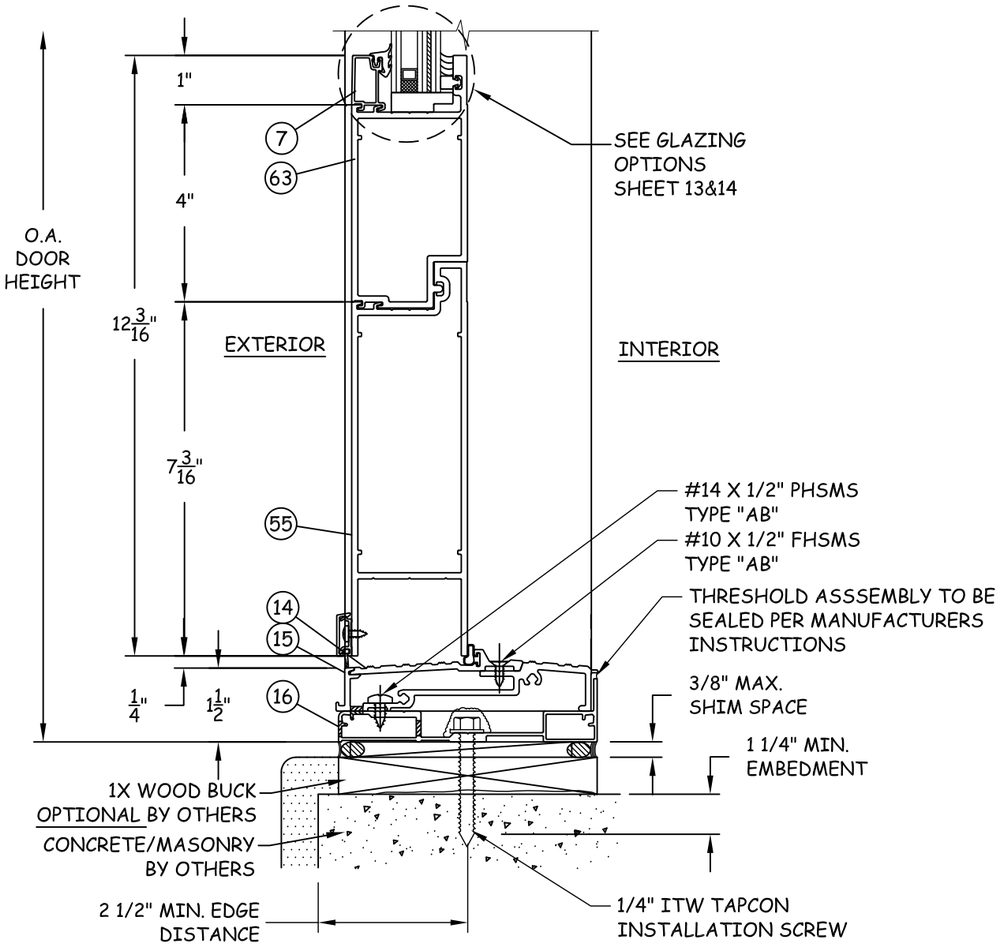

K/7 **VERTICAL SECTION**

SILL - 1X/CONCRETE/MASONRY
STACKED BOTTOM RAIL

YKK AP AMERICA INC.
332 FIRETOWER ROAD
DUBLIN, GEORGIA 31021
PH: (478) 277-2549 FX: (678) 838-6001

TITLE: SERIES 35H ALUMINUM OUTSWING ENTRANCE DOOR
VERTICAL SECTIONS 3

PREPARED BY:
BUILDING DROPS, INC.
398 E. DANIA BEACH BLVD. #338
DANIA BEACH, FL 33004
PH: (954) 399-8478 FX: (954) 744-4738

REVISIONS

NO.	DESCRIPTION	BY	DATE

HERMES F. NORERO 118471 LICENSED PROFESSIONAL ENGINEER STATE OF TEXAS

DATE:	DWN BY:	CHK BY:	SCALE:
09.17.14	SM	MSS	NTS

DWG #: YKK042

SHEET: 7 OF 19

2/16/2015 5:14 PM

s:\projects\ykk ap america, inc\tdi-14-0810 proposal for tdi submittal - commercial products\35h & 50 h (f116654)\dwg\ykk042 - 35h.dwg

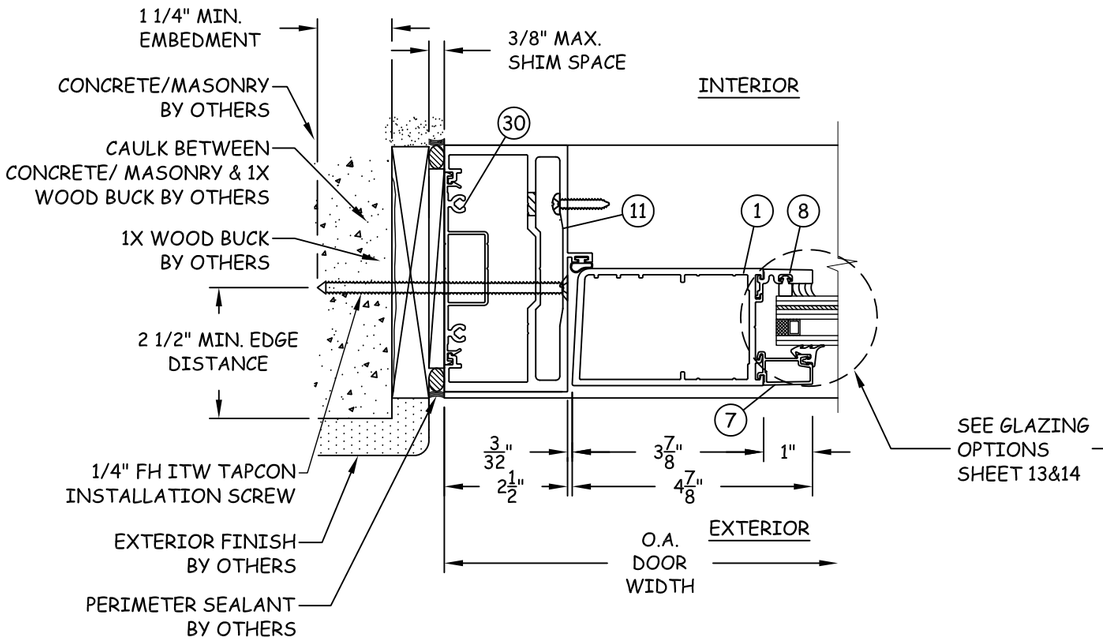

L/8 HORIZONTAL SECTION

JAMB - CONCRETE/MASONRY

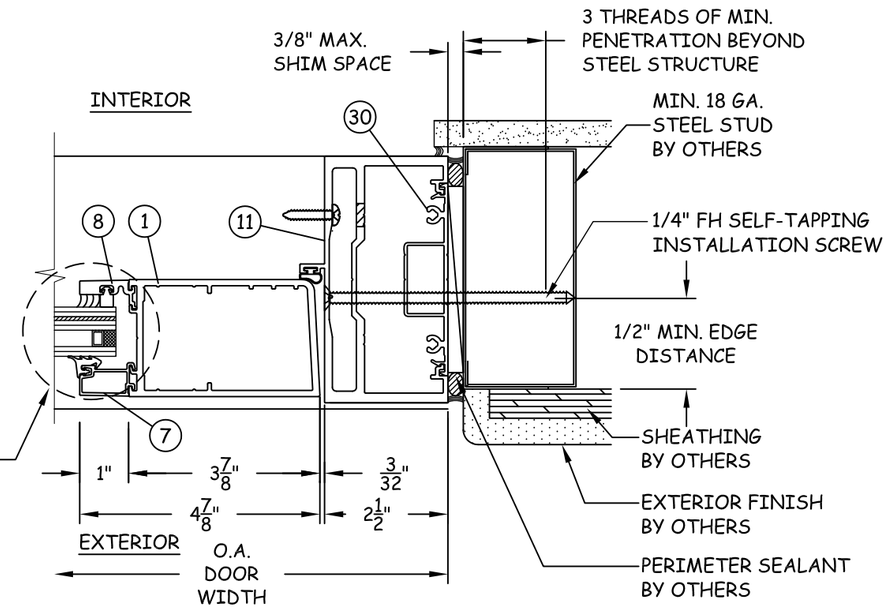

M/8 HORIZONTAL SECTION

JAMB - STEEL STUD

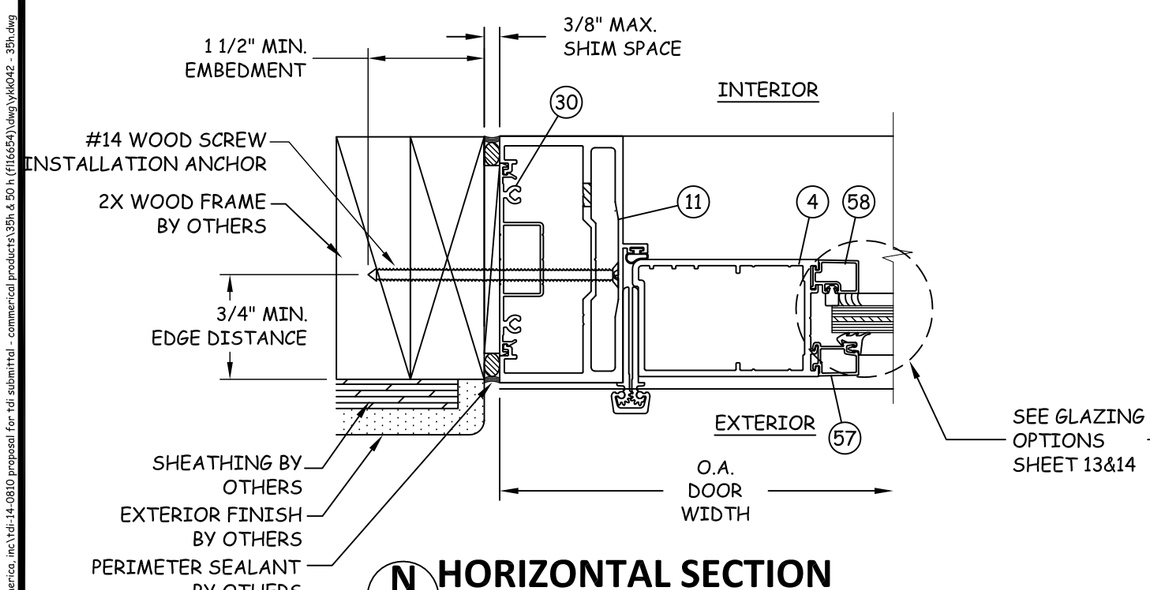

N/8 HORIZONTAL SECTION

JAMB -2XWOOD FRAME CONTINUOUS HINGE

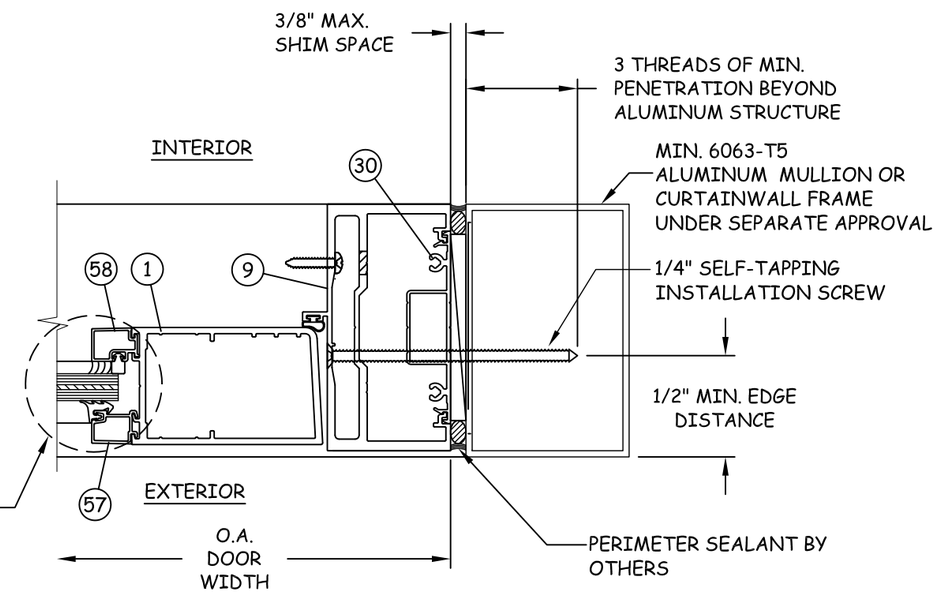

P/8 HORIZONTAL SECTION

JAMB - ALUMINUM STUD

YKK AP AMERICA INC.
332 FIRETOWER ROAD
DUBLIN, GEORGIA 31021
PH: (478) 277-2549 FX: (678) 838-6001

TITLE: SERIES 35H ALUMINUM OUTSWING ENTRANCE DOOR

HORIZONTAL SECTIONS 1

PREPARED BY:
BUILDING DROPS, INC.
398 E. DANIA BEACH BLVD. #338
DANIA BEACH, FL 33004
PH: (954) 399-8478 FX: (954) 744-4738

REVISIONS

NO.	DESCRIPTION	BY	DATE

STATE OF TEXAS
HERMES F. NORERO
118471
PROFESSIONAL ENGINEER

DATE: 09.17.14
DWN BY: SM
CHK BY: MSS
SCALE: NTS

DWG #: YKK042

SHEET: 8 OF 19

2/16/2015 5:14 PM

s:\projects\ykk ap america, inc\tdi-14-0810 proposal for tdi submittal - commerical products\35h & 50 h (fl16654)\dwg\ykk042 - 35h.dwg

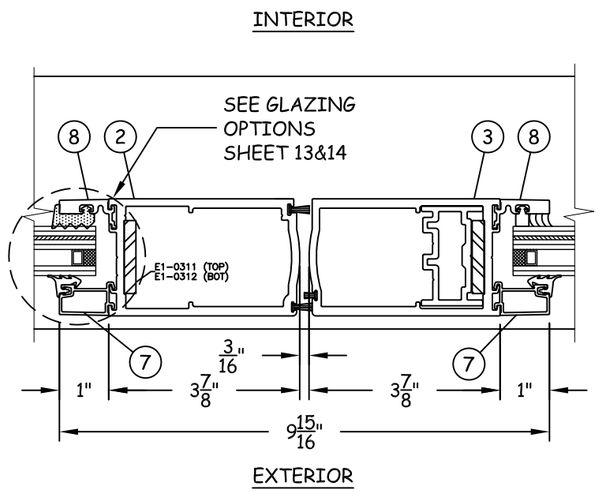

Q/9 HORIZONTAL SECTION

MEETING STILE

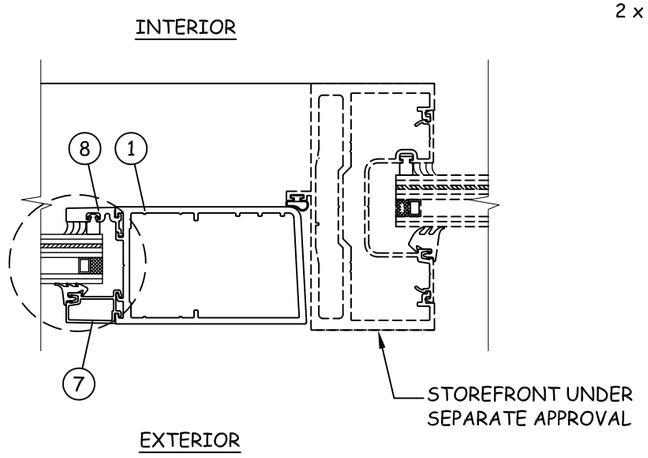

U/9 HORIZONTAL SECTION

VERTICAL MULLION
STOREFRONT SYSTEM

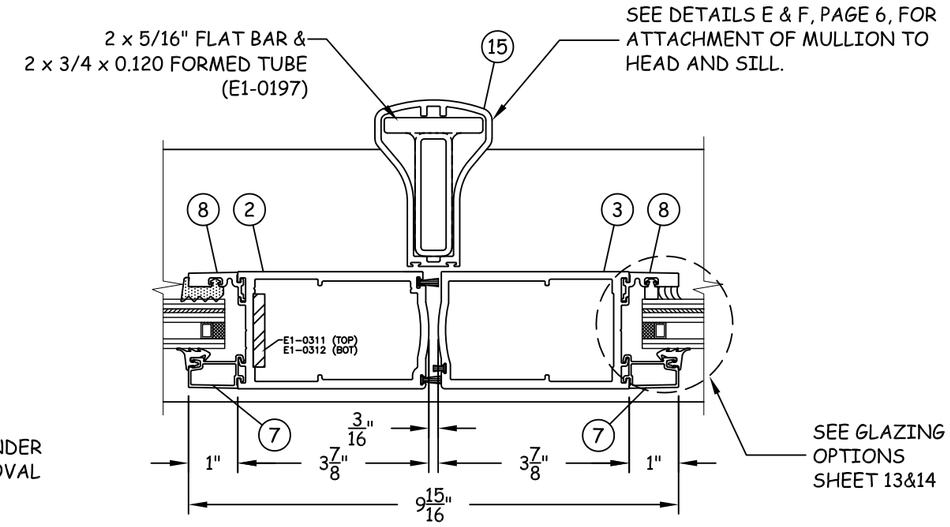

R/9 HORIZONTAL SECTION

MEETING STILE W/REMOVABLE MULLION

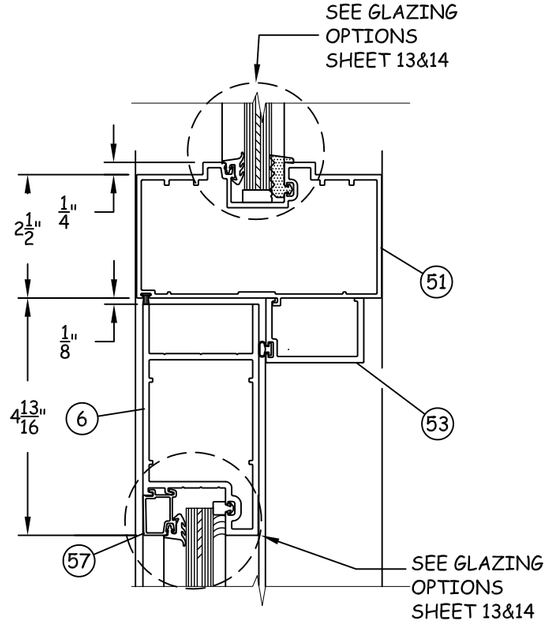

S/9 VERTICAL SECTION

OHCC MULLION
SEE SHEET 3 FOR DP LIMITATIONS

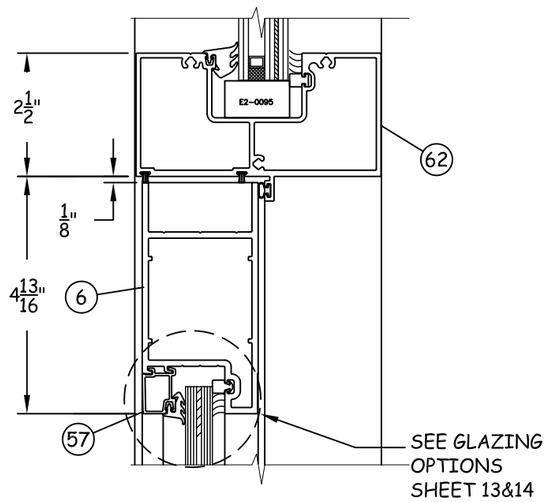

S1/9 VERTICAL SECTION

STANDARD TRANSOM MULLION
SEE SHEET 3 FOR DP LIMITATIONS

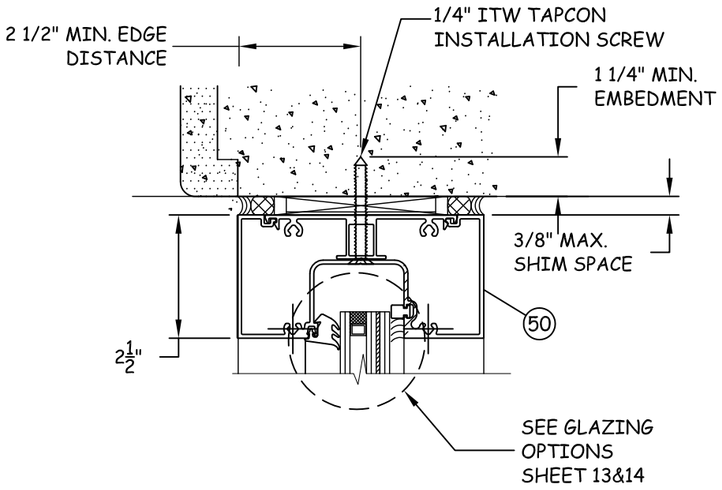

T/9 VERTICAL SECTION

TRANSOM HEADER

YKK AP AMERICA INC.
332 FIRETOWER ROAD
DUBLIN, GEORGIA 31021
PH: (478) 277-2549 FX: (678) 838-6001

TITLE: SERIES 35H ALUMINUM OUTSWING ENTRANCE DOOR
HORIZONTAL DETAILS 2

PREPARED BY:
BUILDING DROPS, INC.
398 E. DANIA BEACH BLVD. #338
DANIA BEACH, FL 33004
PH: (954) 399-8478 FX: (954) 744-4738

REVISIONS

NO.	DESCRIPTION	BY	DATE

STATE OF TEXAS
HERMES F. NORERO
118471
LICENSED PROFESSIONAL ENGINEER
HERMES F. NORERO, P.E.
LICENSED PROFESSIONAL ENGINEER
398 E. DANIA BEACH BLVD. #338
DANIA BEACH, FL 33004
TELE: (954) 399-8478 FAX: (954) 744-4738

DATE:	DWN BY:	CHK BY:	SCALE:
09.17.14	SM	MSS	NTS

DWG #: YKK042

SHEET: 9 OF 19

2/16/2015 5:14 PM

s:\projects\ykk ap america, inc\tdi-14-0810 proposal for tdi submittal - commercial products\35h & 50 h (f116654)\dwg\ykk042 - 35h.dwg

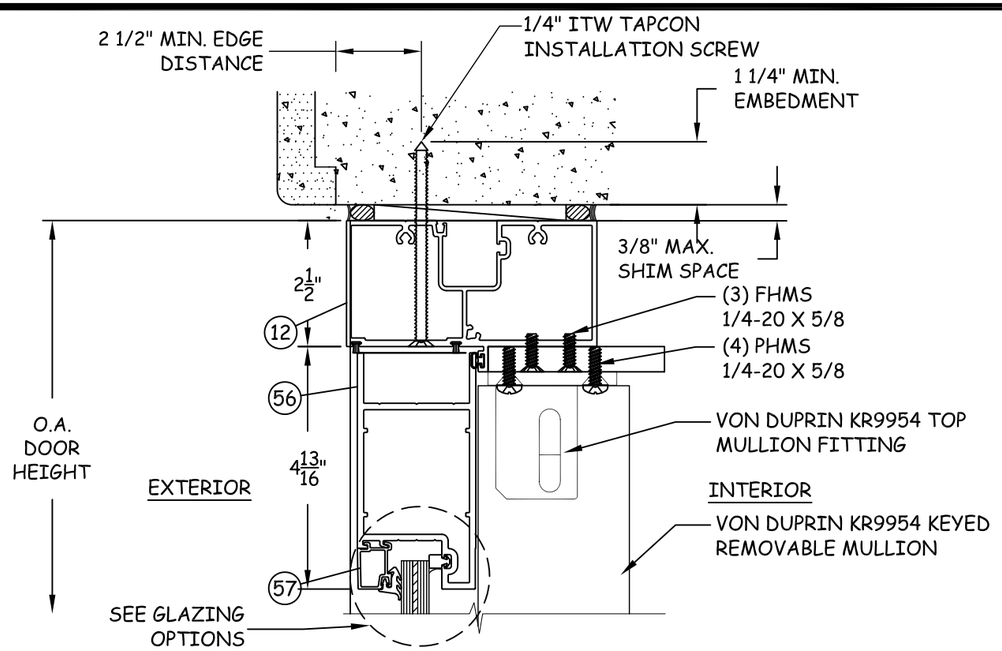

V/10 VERTICAL SECTION

HEAD - CONCRETE/MASONRY REMOVABLE MULLION

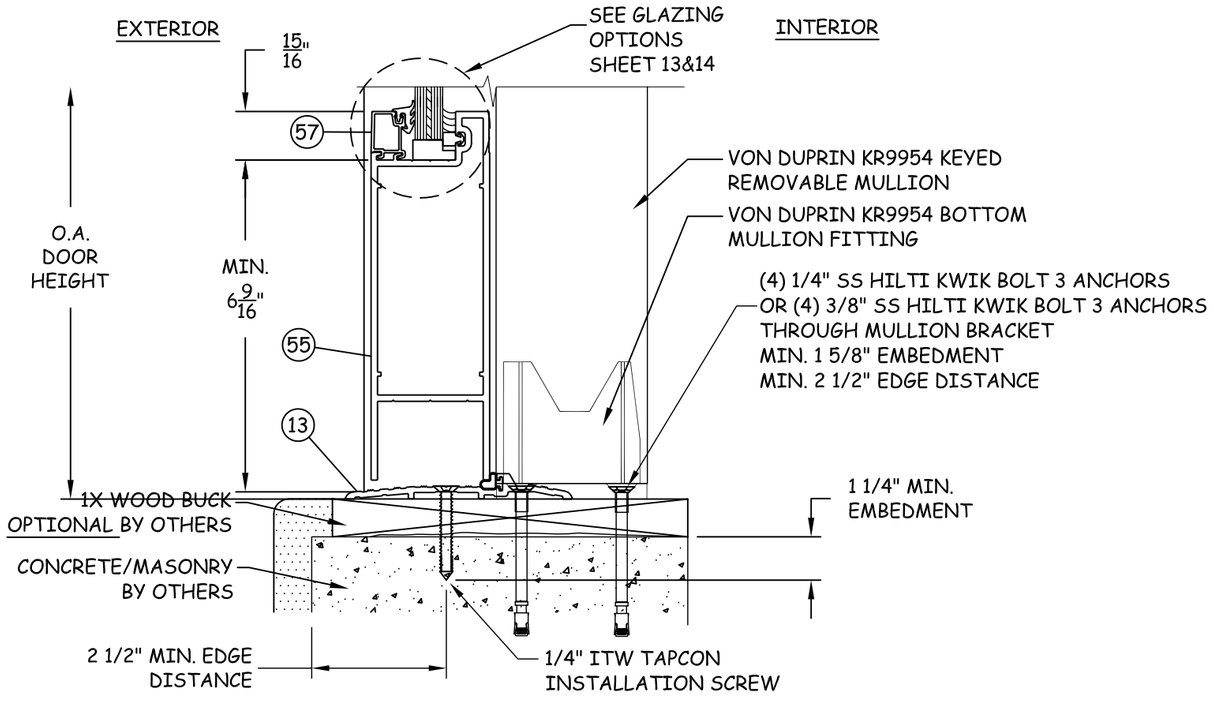

W/10 VERTICAL SECTION

SILL - CONCRETE/MASONRY REMOVABLE MULLION

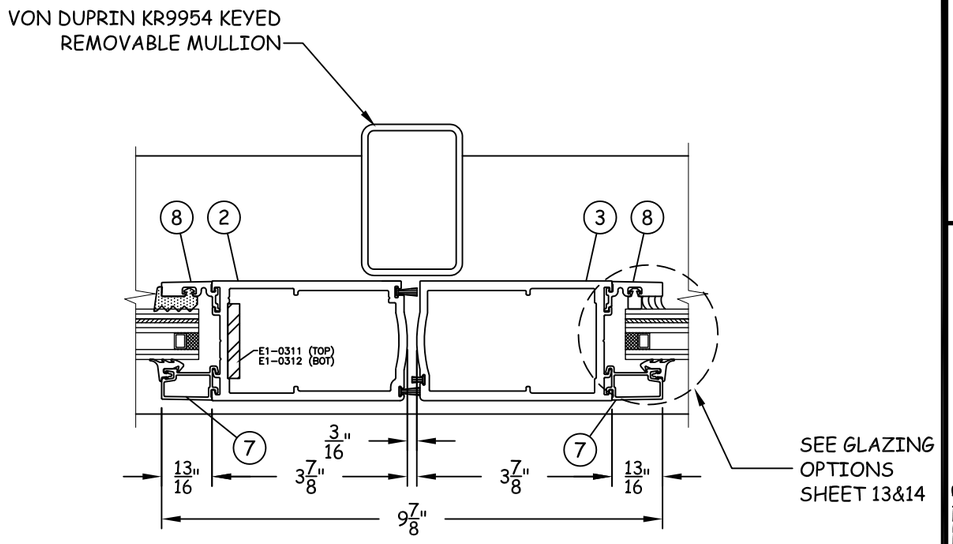

X/10 HORIZONTAL SECTION

MEETING STILE W/REMOVABLE MULLION

NOTE:
SEE ELEVATION B, SHEET 2 FOR DETAILS OF RIM PANIC DEVICES. VON DUPRIN KR9954 KEYED REMOVABLE MULLION TO BE USED WITH VON DUPRIN HARDWARE ONLY.

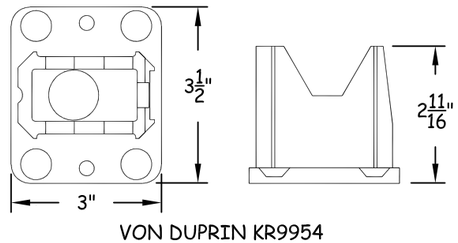

VON DUPRIN KR9954
BOTTOM MULLION FITTING

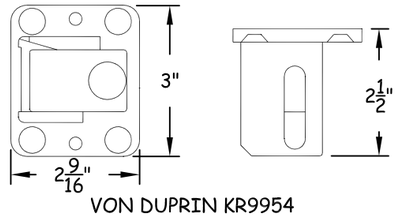

VON DUPRIN KR9954
TOP MULLION FITTING

YKK AP AMERICA INC.
332 FIRETOWER ROAD
DUBLIN, GEORGIA 31021
PH: (478) 277-2549 FX: (678) 838-6001

TITLE: SERIES 35H ALUMINUM OUTSWING ENTRANCE DOOR
HORIZONTAL/VERTICAL SECTIONS

PREPARED BY:
BUILDING DROPS, INC.
398 E. DANIA BEACH BLVD. #338
DANIA BEACH, FL 33004
PH: (954) 399-8478 FX: (954) 744-4738

REVISIONS

NO.	DESCRIPTION	BY	DATE

STATE OF TEXAS
HERMES F. NORERO
118471
PROFESSIONAL ENGINEER
398 E. DANIA BEACH BLVD. #338
DANIA BEACH, FL 33004
(954) 399-8478

DATE:	DWN BY:	CHK BY:	SCALE:
09.17.14	SM	MSS	NTS

DWG #: YKK042

SHEET: 10 OF 19

2/16/2015 5:14 PM
s:\projects\ykk ap america, inc\tdi-14-0810 proposal for tdi submittal - commerical products\35h & 50 h (f116654)\dwg\ykk042 - 35h.dwg

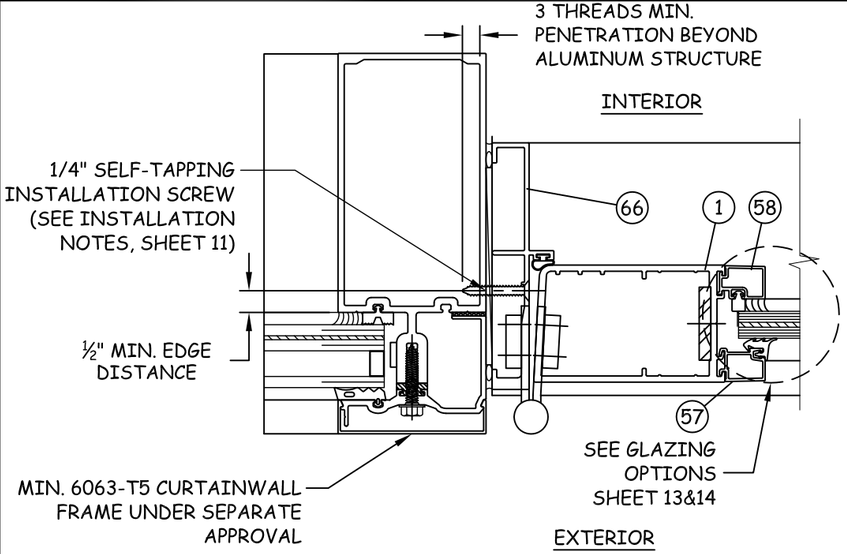

NOTES:

A. CURTAINWALL SUBFRAME IS LIMITED TO A MAXIMUM SIZE OF 78 ½" X 98 ½" FOR ALL HARDWARE TYPES.
B. BUTT HINGE SHOWN, CONTINUOUS HINGES MAY ALSO BE USED.

INSTALLATION NOTES:

A. AT HEAD, USE CLUSTERS OF (3) ANCHORS AT EACH CORNER, SPACED 4 ½" MAX. FROM CORNERS AND 3" O.C. THEREAFTER.
B. (DOUBLE DOORS ONLY) AT HEAD, USE CLUSTER OF (8) ANCHORS AT MIDSPAN, SPACED 2" FROM EITHER SIDE OF MIDSPAN AND 3" O.C. THEREAFTER.
C. AT JAMBS, USE ANCHORS SPACED 5 ½" MAX. FROM CORNERS AND 9 ¾" MAX. O.C. THEREAFTER.

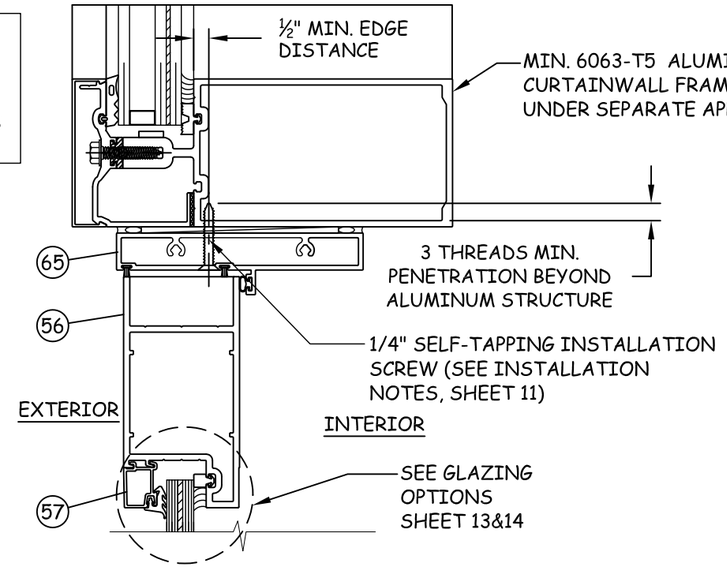

Y 11 HORIZONTAL SECTION

JAMB - SUBFRAME TO CURTAINWALL

Z 11 VERTICAL SECTION

HEAD - SUBFRAME TO CURTAINWALL

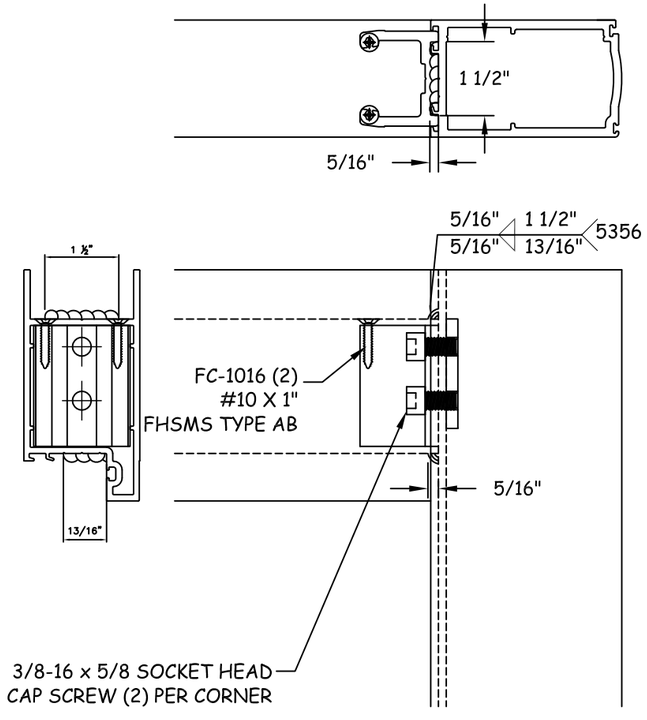

DOOR CORNER DETAIL 1

HEAD - TYPICAL

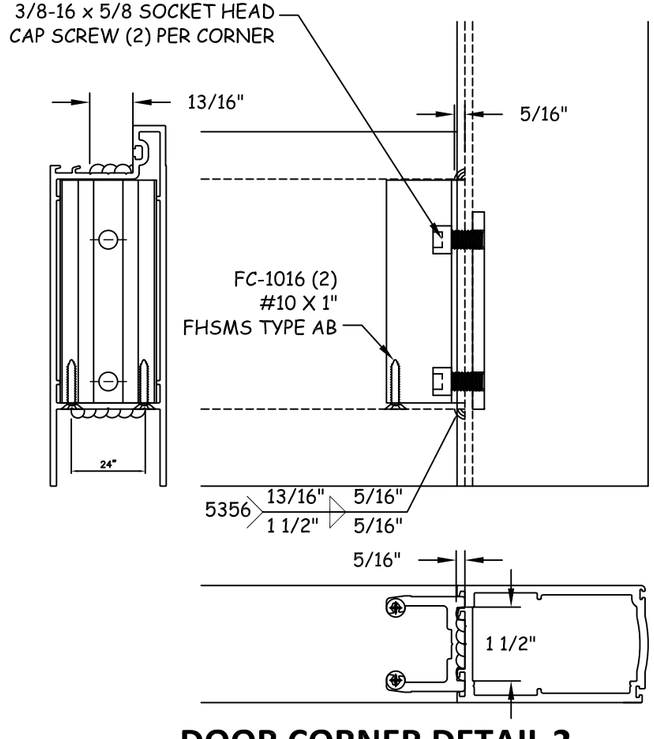

DOOR CORNER DETAIL 2

SILL - TYPICAL

YKK AP AMERICA INC.
332 FIRETOWER ROAD
DUBLIN, GEORGIA 31021
PH: (478) 277-2549 FX: (678) 838-6001

TITLE: SERIES 35H ALUMINUM OUTSWING ENTRANCE DOOR CURTAINWALL INSTALLATION & DOOR CORNER DETAILS

PREPARED BY:
BUILDING DROPS, INC.
398 E. DANIA BEACH BLVD. #338
DANIA BEACH, FL 33004
PH: (954) 399-8478 FX: (954) 744-4738

REVISIONS

NO.	DESCRIPTION	BY	DATE

STATE OF TEXAS
HERMES F. NORERO
118471
PROFESSIONAL ENGINEER
HERMES F. NORERO, P.E.
398 E. DANIA BEACH BLVD. #338
DANIA BEACH, FL 33004
TEL: (954) 399-8478 FAX: (954) 744-4738

DATE:	DWN BY:	CHK BY:	SCALE:
09.17.14	SM	MSS	NTS

DWG #: YKK042

SHEET: 11 OF 19

2/16/2015 5:14 PM

s:\projects\ykk ap america, inc\tdi-14-0810 proposal for tdi submittal - commerical products\35h & 50 h (fl166541)\dwg\ykk042 - 35h.dwg

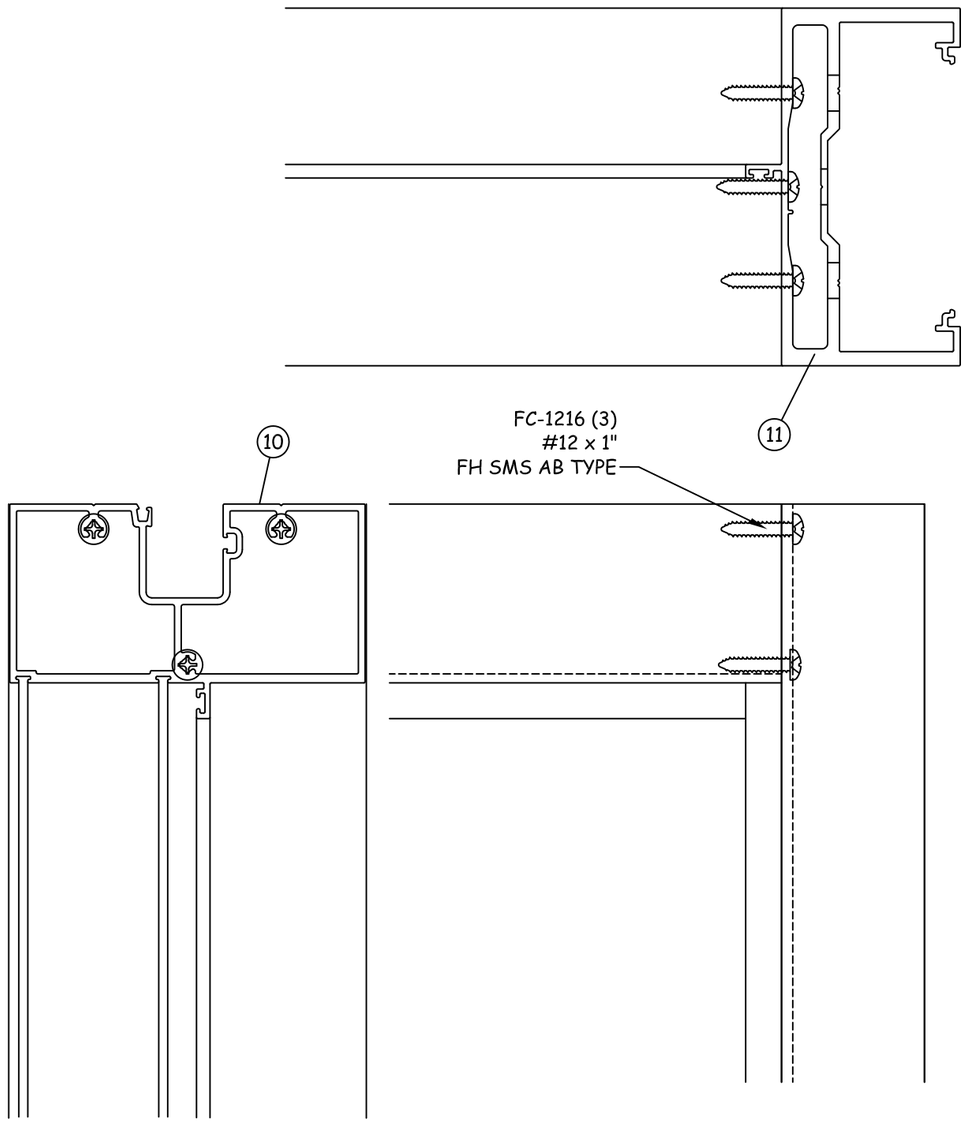

FRAME CORNER DETAIL 1

HEAD - TYPICAL

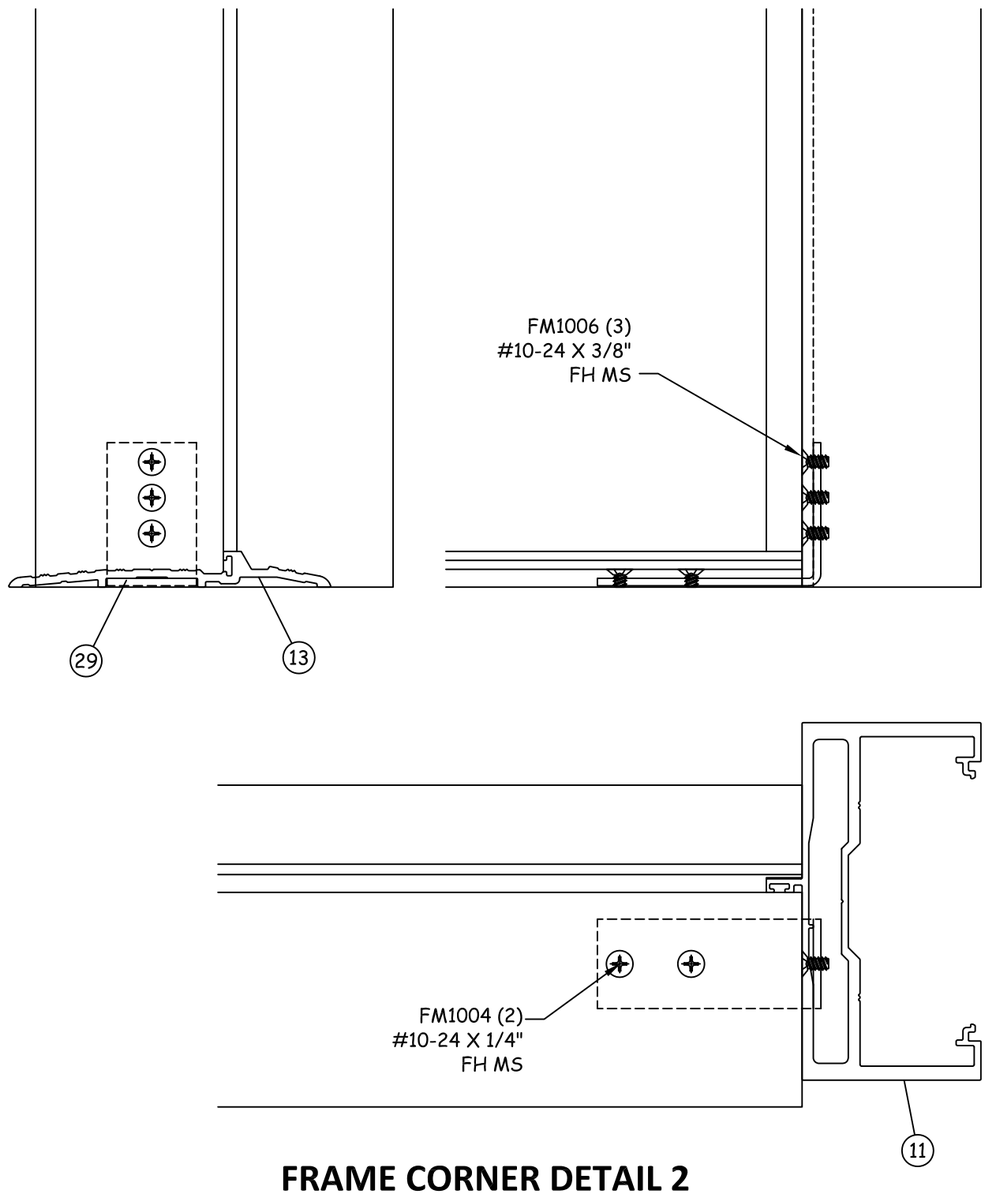

FRAME CORNER DETAIL 2

SILL - TYPICAL

YKK AP AMERICA INC.
332 FIRETOWER ROAD
DUBLIN, GEORGIA 31021
PH: (478) 277-2549 FX: (678) 838-6001

TITLE: SERIES 35H ALUMINUM OUTSWING ENTRANCE DOOR

FRAME CORNER DETAILS

PREPARED BY:
BUILDING DROPS, INC.
398 E. DANIA BEACH BLVD. #338
DANIA BEACH, FL 33004
PH: (954) 399-8478 FX: (954) 744-4738

REVISIONS

NO.	DESCRIPTION	BY	DATE

STATE OF TEXAS
HERMES F. NORERO
118471
PROFESSIONAL ENGINEER

DATE: 09.17.14
DWN BY: SM
CHK BY: MSS
SCALE: NTS

DWG #: YKK042

SHEET: 12 OF 19

2/16/2015 5:14 PM

s:\projects\ykk ap america, inc\tdi-14-0810 proposal for tdi submittal - commerical products\35h & 50 h (fl16654)\dwg\ykk042 - 35h.dwg

LARGE & SMALL MISSILE IMPACT

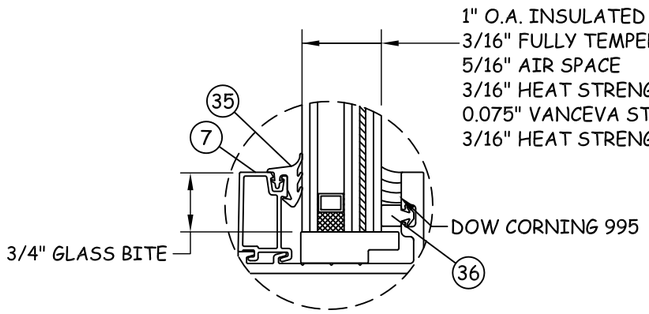

GLAZING DETAIL A

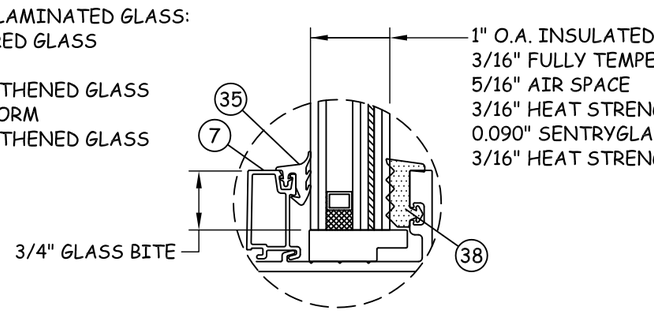

GLAZING DETAIL B
DRY GLAZED

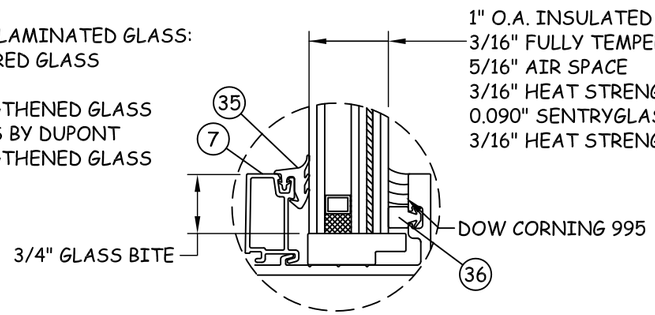

GLAZING DETAIL C

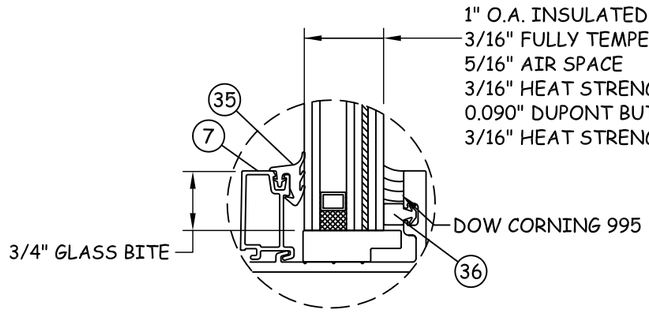

GLAZING DETAIL D

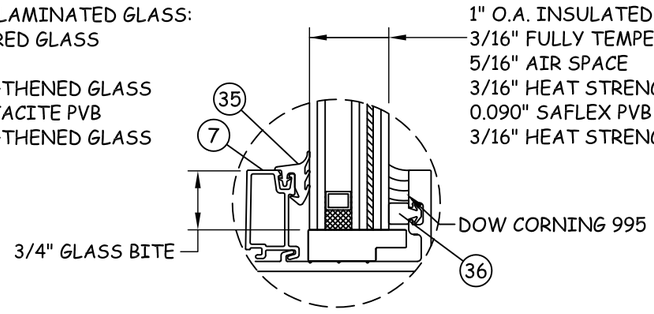

GLAZING DETAIL E

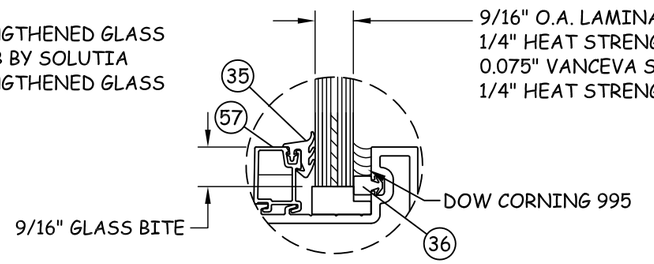

GLAZING DETAIL A1

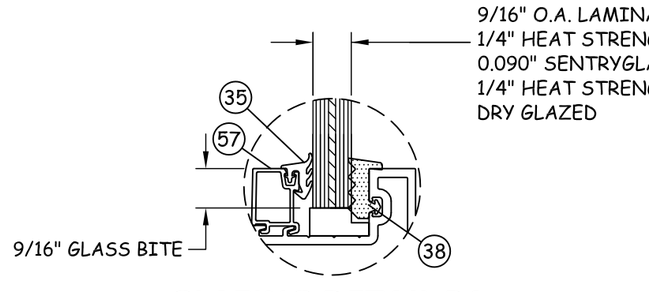

GLAZING DETAIL B1
DRY GLAZED

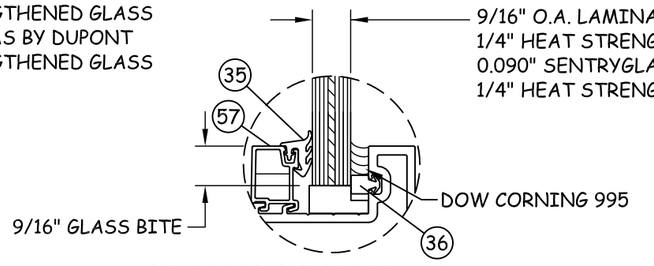

GLAZING DETAIL C1

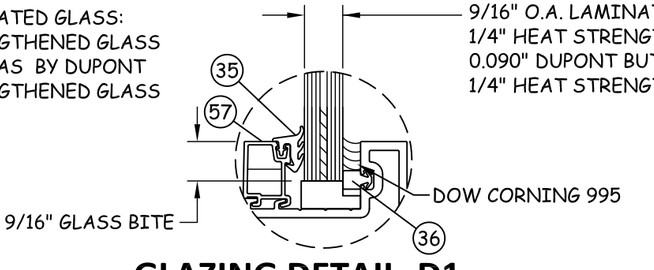

GLAZING DETAIL D1

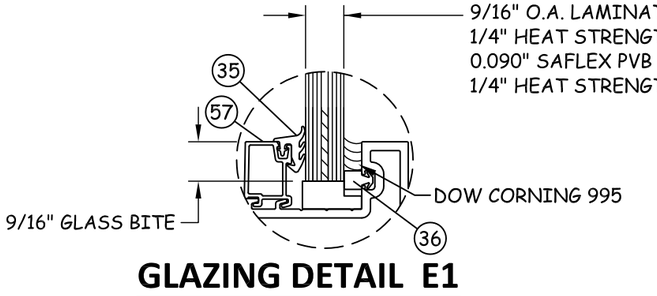

GLAZING DETAIL E1

NOTE:
A. "AIR SPACE" INDICATED IN GLAZING DETAILS CONSISTS OF:
   A.1. SPACER: ALUMINUM BOX SPACER AROUND THE PERIMETER OF THE GLASS.
   A.2. PRIMARY SEALANT: TYPE PIB-29 MANUFACTURED BY ADCO.
   A.3. SECONDARY SEALANT: TYPE GE-3723 A&B (TWO PART) SILICONE MANUFACTURED BY G.E.

YKK AP AMERICA INC.
332 FIRETOWER ROAD
DUBLIN, GEORGIA 31021
PH: (478) 277-2549 FX: (678) 838-6001

TITLE: SERIES 35H ALUMINUM OUTSWING ENTRANCE DOOR
GLAZING DETAILS 1

PREPARED BY:
BUILDING DROPS, INC.
398 E. DANIA BEACH BLVD. #338
DANIA BEACH, FL 33004
PH: (954) 399-8478 FX: (954) 744-4738

REVISIONS

NO.	DESCRIPTION	DATE	BY

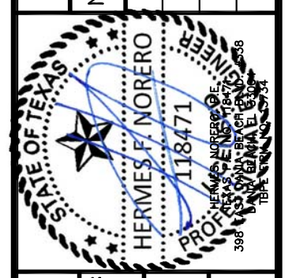

DATE:	DWN BY:	CHK BY:	SCALE:
09.17.14	SM	MSS	NTS

DWG #: YKK042

SHEET: 13 OF 19

2/16/2015 5:14 PM
s:\projects\ykk ap america, inc\tdi-14-0810 proposal for tdi submittal - commercial products\35h & 50 h (f116654)\dwg\ykk042 - 35h.dwg

SMALL MISSILE IMPACT ONLY

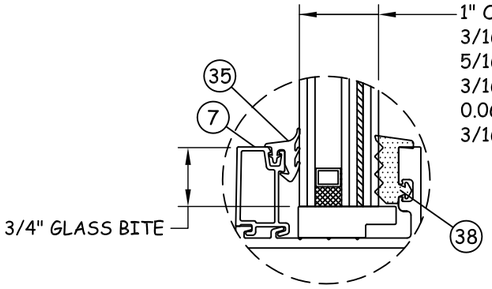

GLAZING DETAIL F
DRY GLAZED

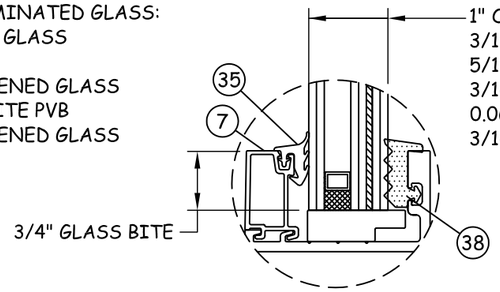

GLAZING DETAIL G
DRY GLAZED

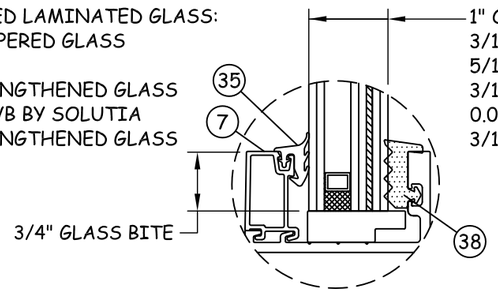

GLAZING DETAIL H
DRY GLAZED

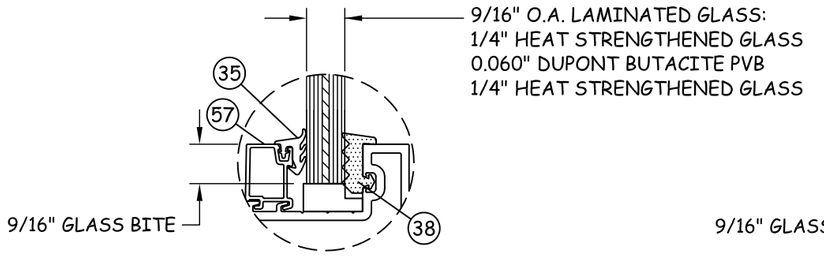

GLAZING DETAIL F1
DRY GLAZED

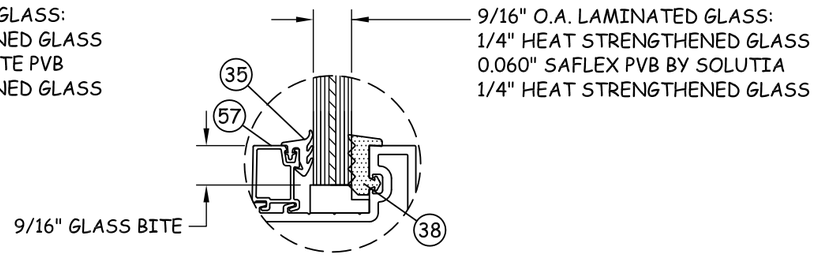

GLAZING DETAIL G1
DRY GLAZED

NOTE:
A. "AIR SPACE" INDICATED IN GLAZING DETAILS CONSISTS OF:
   A.1. SPACER: ALUMINUM BOX SPACER AROUND THE PERIMETER OF THE GLASS.
   A.2. PRIMARY SEALANT: TYPE PIB-29 MANUFACTURED BY ADCO.
   A.3. SECONDARY SEALANT: TYPE GE-3723 A&B (TWO PART) SILICONE MANUFACTURED BY G.E.

YKK AP AMERICA INC.
332 FIRETOWER ROAD
DUBLIN, GEORGIA 31021
PH: (478) 277-2549 FX: (678) 838-6001

TITLE: SERIES 35H ALUMINUM OUTSWING ENTRANCE DOOR
GLAZING DETAILS 2

PREPARED BY:
BUILDING DROPS, INC.
398 E. DANIA BEACH BLVD. #338
DANIA BEACH, FL 33004
PH: (954) 399-8478 FX: (954) 744-4738

REVISIONS

NO.	DESCRIPTION	BY	DATE

STATE OF TEXAS
HERMES F. NORERO
118471
LICENSED PROFESSIONAL ENGINEER

DATE:	DWN BY:	CHK BY:	SCALE:
09.17.14	SM	MSS	NTS

DWG #: YKK042

SHEET: 14 OF 19

2/16/2015 5:14 PM

s:\projects\ykk ap america, inc\tdi-14-0810 proposal for tdi submittal - commercial products\35h & 50 h (f116654)\dwg\ykk042 - 35h.dwg

35H DOOR BILL OF MATERIAL

ITEM #	PART #	DESCRIPTION	MATERIAL	MANUFACTURER
1	E9-0222	PIVOT STILE	6063-T5	YKK AP
2	E9-0230	MEETING STILE	6063-T5	YKK AP
3	E9-0223	MEETING STILE	6063-T5	YKK AP
4	E9-0236	CONTINUOUS HINGE STILE	6063-T5	YKK AP
5	E9-0251	8" BOTTOM RAIL	6063-T5	YKK AP
6	E9-0253	TOP RAIL	6063-T5	YKK AP
7	E9-0255	EXTERIOR GLASS STOP	6063-T5	YKK AP
8	E9-0254	INTERIOR GLASS STOP	6063-T5	YKK AP
9	E9-0347	DOOR SWEEP BASE	6063-T5	YKK AP
10	E9-0348	DOOR SWEEP COVER	6063-T5	YKK AP
11	E9-0504	DOOR JAMB	6063-T5	YKK AP
12	E9-0501	DOOR HEADER	6063-T5	YKK AP
13	E9-0487	4 1/2"AIRTHGHT THRESHOLD	6063-T5	YKK AP
14	E9-0503	THRESHOLD ATTACHMENT	6063-T5	YKK AP
15	E9-0502	5 5/16" THRESHOLD	6063-T5	YKK AP
16	E9-0619	SILL FLASHING	6063-T5	YKK AP
17	E9-0522	REMOVABLE MULLION	6063-T5	YKK AP
18	E9-0227	SHEAR CLIP	6063-T5	YKK AP
19	E9-0231	LOCK BASE	6063-T5	YKK AP
20	E9-0599	HINGE BACKER	6063-T5	YKK AP
21	E9-0657	FLAT FILLER	6063-T5	YKK AP
22	E1-0311	BACKER PLATE	STEEL	
23	E1-0312	BACKER PLATE	STEEL	
24	E1-0351	JOINT CLIP	6063-T5	YKK AP
25	E1-0353	LOCK BASE	6063-T5	YKK AP
26	E1-0357	HINGE BACK PLATE	6063-T5	YKK AP
27	E1-0381	JOINT CLIP	6063-T5	YKK AP
28	E1-1050	END DAM	6063-T5	YKK AP
29	E1-1055	THRESHOLD CLIP	STEEL	
30	E1-1068	FLAT FILLER	6063-T5	YKK AP
31	E2-0051	AIRTIGHT GASKET	PVC	
32	E2-0062	WEATHERSTRIP	POLYPROPYLENE	
33	E2-0063	SETTING BLOCK	EPDM	
34	E2-0067	DOOR SWEEP GASKET	EPDM	
35	E2-0083	EXTERIOR GASKET	EPDM	
36	E2-0085	SPACER GASKET	PC EPDM	
37	E2-0087	WEATHERSTRIP	POLYPROPYLENE	
38	E2-0088	INTERIOR GASKET	EPDM SPONGE	
39	E2-0093	ASTRAGAL GASKET	SILOCONE	
40	E3-0005	ADJUSTABLE CAP	NYLON	
41	E4-0001	STANDARD LABEL	ALUMINUM	
42	E4-0028	IMPACT LABEL	ALUMINUM	
43	FC-1016	FH SMS	STEEL	
44	SM-3810	SH CAP SCREW	STEEL	
45	E9-0238	BOTTOM RAIL EXT.	6063-T5	YKK AP
46	27HD	CONTINUOUS HINGE		SELECT
47	780-226HD	CONTINUOUS HINGE		HAGAR-ROTON
48	BB1191	BUTT HINGES		HAGAR
49	E9-0601	MONO TRANSOM HEADER	6063-T5	YKK AP
50	E9-0651	I.G. TRANSOM HEADER	6063-T5	YKK AP
51	E9-0520	MONO TRANSOM MULL	6063-T5	YKK AP
52	E9-0521	I.G. TRANSOM MULL	6063-T5	YKK AP
53	E9-0218	TRANSOM DOOR STOP	6063-T5	YKK AP
54	E1-1073	TRANSOM HEAD FILLER	6063-T5	YKK AP
55	E9-0221	7" BOTTOM RAIL MONO	6063-T5	YKK AP
56	E9-0220	TOP RAIL MONO	6063-T5	YKK AP
57	E9-0225	EXT. GLASS STOP MONO	6063-T5	YKK AP
58	E9-0226	INT. GLASS STOP MONO	6063-T5	YKK AP
59	E9-0217	MIDRAIL FILLER	6063-T5	YKK AP
60	E9-0237	PANIC MIDRAIL	6063-T5	YKK AP
61	E9-0501	MONO. TRANSOM MULL	6063-T5	YKK AP
62	E9-0517	I.G. TRANSOM MULL	6063-T5	YKK AP
63	E9-0245	I.G. BOTTOM RAIL EXT.	6063-T5	YKK AP
64	E1-0197	REM. MULL REINF.	STEEL (MIN. A36)	YKK AP
65	E9-3181	CW SUBFRAME - HEAD	6063-T5	YKK AP
66	E8-3180	CW SUBFRAME - JAMBS	6063-T5	YKK AP

1 PIVOT STILE
6063-T5

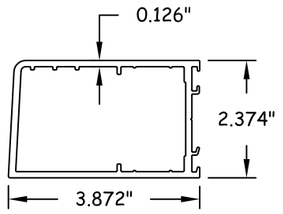

2 MEETING STILE
6063-T5

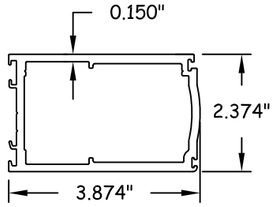

3 MEETING STILE
6063-T5

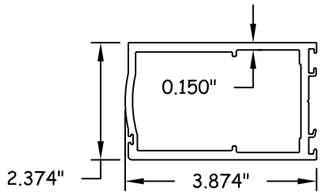

4 CONTINUOUS HINGE STILE
6063-T5

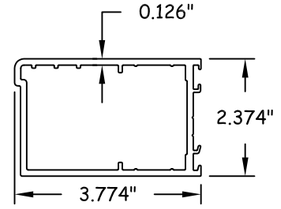

5 8" BOTTOM RAIL - TYP.
6063-T5

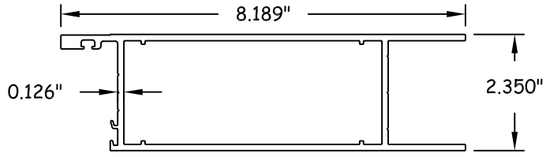

NOTE:
BOTTOM RAIL SHALL BE, AT MINIMUM, 7 5/16"

6 TOP RAIL
6063-T5

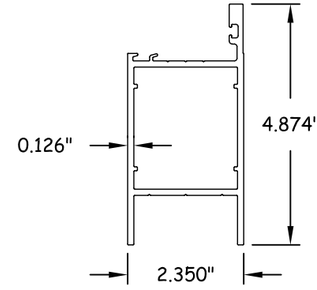

7 EXTERIOR GLASS STOP
6063-T5

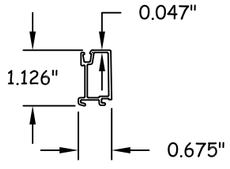

8 INT. GLASS STOP
6063-T5

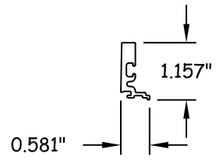

9 DOOR SWEEP BASE
6063-T5

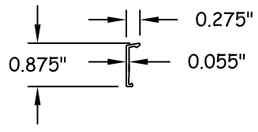

10 DOOR SWEEP COVER
6063-T5

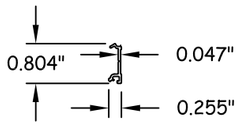

11 DOOR JAMB
6063-T5

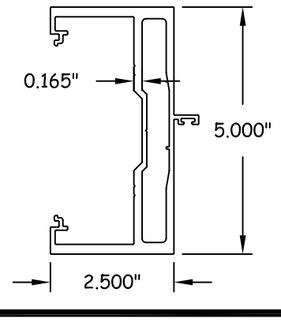

12 DOOR HEAD
6063-T5

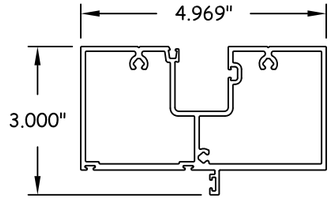

13 4 1/2" AIRTIGHT THRESHOLD
6063-T5

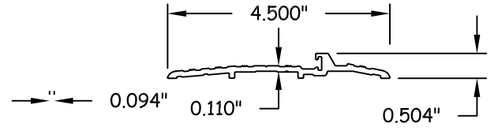

14 THRESHOLD ATTACHMENT
6063-T5

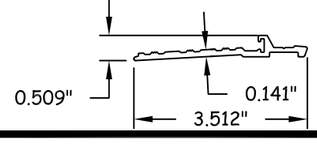

YKK AP AMERICA INC.
332 FIRETOWER ROAD
DUBLIN, GEORGIA 31021
PH: (478) 277-2549 FX: (678) 838-6001

TITLE: SERIES 35H ALUMINUM OUTSWING ENTRANCE DOOR
COMPONENTS & BILL OF MATERIALS

PREPARED BY:
BUILDING DROPS, INC.
398 E. DANIA BEACH BLVD. #338
DANIA BEACH, FL 33004
PH: (954) 399-8478 FX: (954) 744-4738

REVISIONS

NO.	DESCRIPTION	BY	DATE

STATE OF TEXAS — HERMES F. NORERO — 118471 — PROFESSIONAL ENGINEER

DATE:	DWN BY:	CHK BY:	SCALE:
09.17.14	SM	MSS	NTS

DWG #: YKK042

SHEET: 15 OF 19

2/16/2015 5:14 PM

s:\projects\ykk ap america, inc\tdi-14-0810 proposal for tdi submittal - commercial products\35h & 50 h (f116654)\dwg\ykk042 - 35h.dwg

15 5 5/16" THRESHOLD
6063-T5

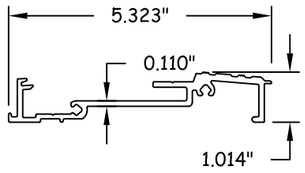

16 SILL FLASHING
6063-T5

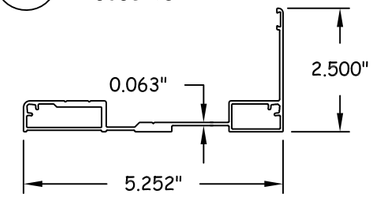

17 REMOVABLE MULLION
6063-T5
TYPICAL WALL
THICKNESS: .125"

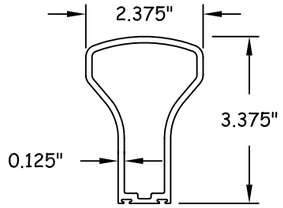

18 SHEAR CLIP
6063-T5
TYPICAL WALL
THICKNESS: .189"

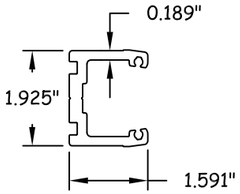

19 LOCK BASE
6063-T5
TYPICAL WALL
THICKNESS: .118"

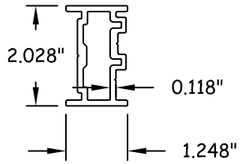

29 THRESHOLD CLIP
STEEL
TYPICAL WALL
THICKNESS: .152"

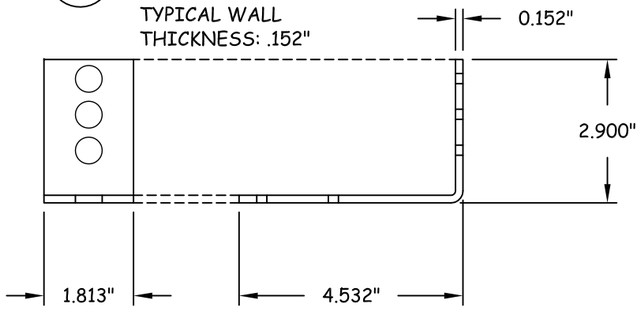

30 FLAT FILLER
6063-T5

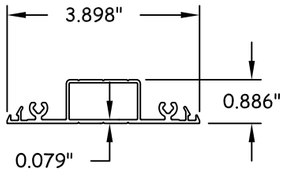

45 BOTTOM RAIL EXTENSION
6063-T5

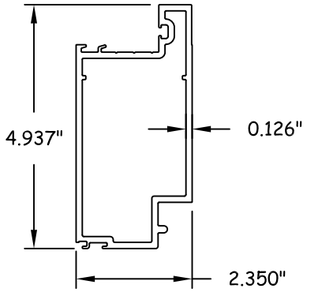

49 MONO TRANS. HEADER
6063-T5

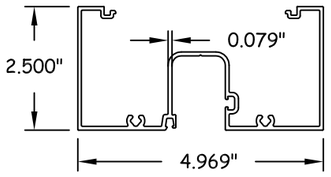

50 I.G. TRANS. HEADER
6063-T5

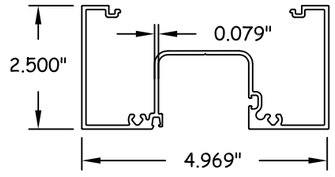

51 MONO TRANSOM MULL
6063-T5

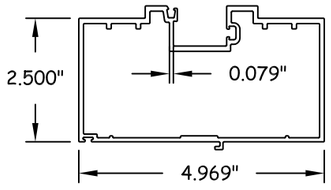

52 I.G. TRANSOM MULL
6063-T5

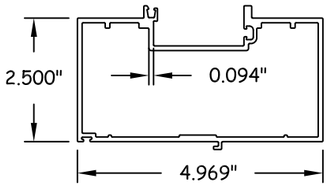

53 TRANSOM DOOR STOP
6063-T5

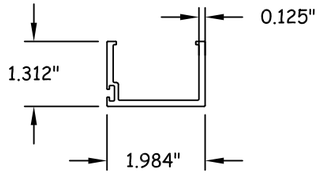

54 TRANSOM HEAD FILLER
6063-T5

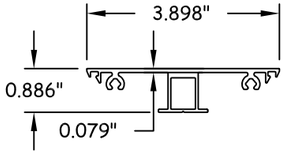

55 7" BOTTOM RAIL MONO.
6063-T5

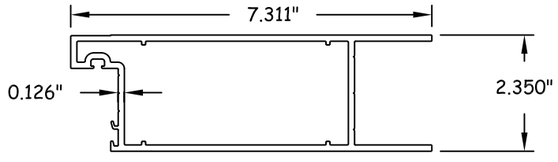

YKK AP AMERICA INC.
332 FIRETOWER ROAD
DUBLIN, GEORGIA 31021
PH: (478) 277-2549 FX: (678) 838-6001

TITLE: SERIES 35H ALUMINUM OUTSWING ENTRANCE DOOR COMPONENTS (1)

PREPARED BY:
BUILDING DROPS, INC.
398 E. DANIA BEACH BLVD. #338
DANIA BEACH, FL 33004
PH: (954) 399-8478 FX: (954) 744-4738

REVISIONS

NO.	DESCRIPTION	BY	DATE

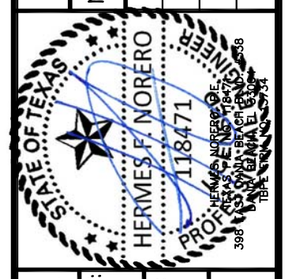

DATE:	DWN BY:	CHK BY:	SCALE:
09.17.14	SM	MSS	NTS

DWG #: YKK042

SHEET: 16 OF 19

2/16/2015 5:14 PM

s:\projects\ykk ap america, inc\tdi-14-0810 proposal for tdi submittal - commercial products\35h & 50 h (f116654)\dwg\ykk042 - 35h.dwg

56 TOP RAIL - MONO.
6063-T5

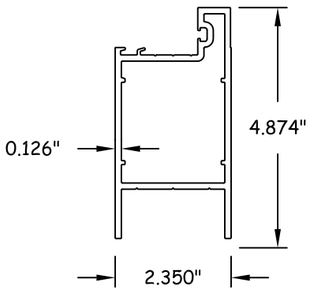

57 EXT. GLASS STOP-MONO.
6063-T5

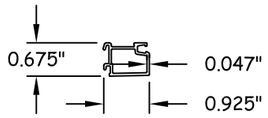

58 INT. GLASS STOP-MONO.
6063-T5

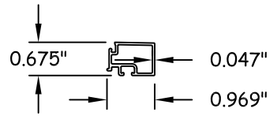

59 MIDRAIL FILLER
6063-T5

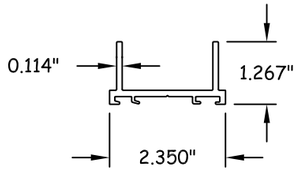

60 PANIC MIDRAIL
6063-T5

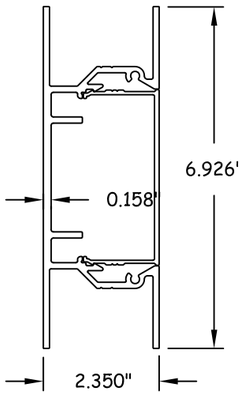

61 MONO TRANSOM MULL
6063-T5

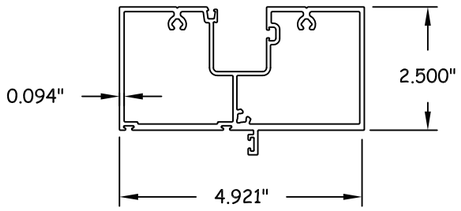

62 I.G. TRANSOM MULL
6063-T5

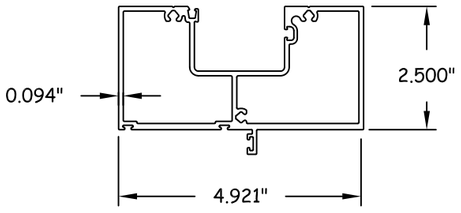

63 I.G. BOTTOM RAIL EXT.
6063-T5

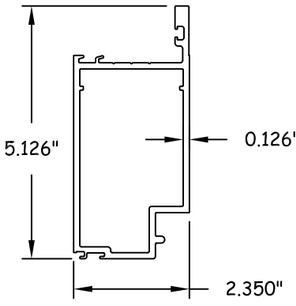

64 REMOVABLE MULL REINFORCEMENT
STEEL

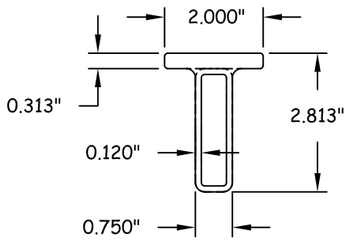

65 CW SUBFRAME - HEAD
6063-T5

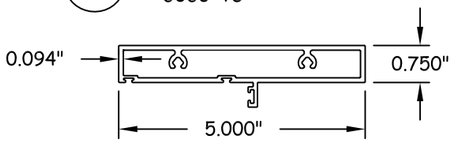

66 CW SUBFRAME - JAMBS
6063-T5

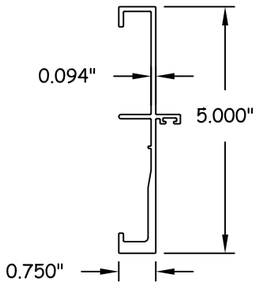

YKK AP AMERICA INC.
332 FIRETOWER ROAD
DUBLIN, GEORGIA 31021
PH: (478) 277-2549 FX: (678) 838-6001

TITLE: SERIES 35H ALUMINUM OUTSWING ENTRANCE DOOR COMPONENTS (2)

PREPARED BY:
BUILDING DROPS, INC.
398 E. DANIA BEACH BLVD. #338
DANIA BEACH, FL 33004
PH: (954) 399-8478 FX: (954) 744-4738

REVISIONS

NO.	DESCRIPTION	BY	DATE

STATE OF TEXAS — HERMES F. NORERO — 118471 — PROFESSIONAL ENGINEER

DATE:	DWN BY:	CHK BY:	SCALE:
09.17.14	SM	MSS	NTS

DWG #: YKK042

SHEET: 17 OF 19

2/16/2015 5:14 PM

s:\projects\ykk ap america, inc\1di-14-0810 proposal for tdi submittal - commercial products\35h & 50 h (f116654)\dwg\ykk042 - 35h.dwg

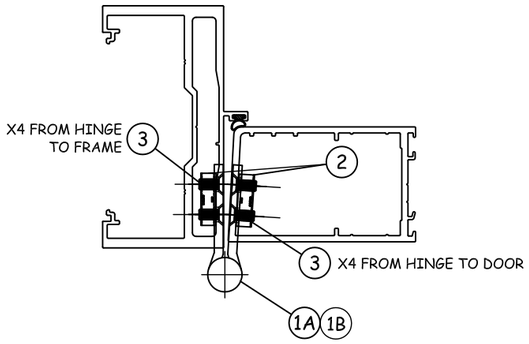

STANDARD BUTT HINGE
HORIZONTAL SECTION

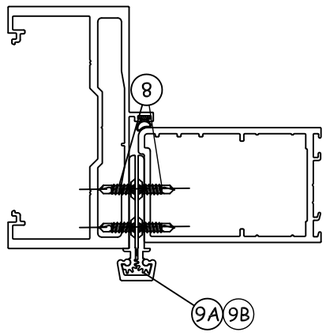

CONTINUOUS HINGE
HORIZONTAL SECTION

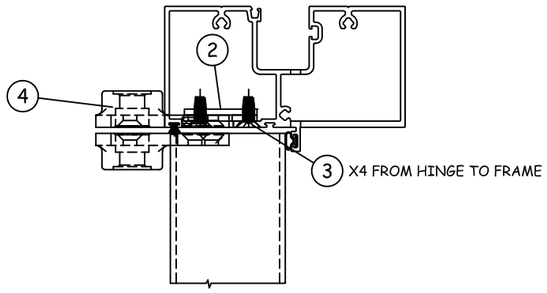

HD TOP OFFSET PIVOT HINGE
VERTICAL SECTION - SIDE VIEW

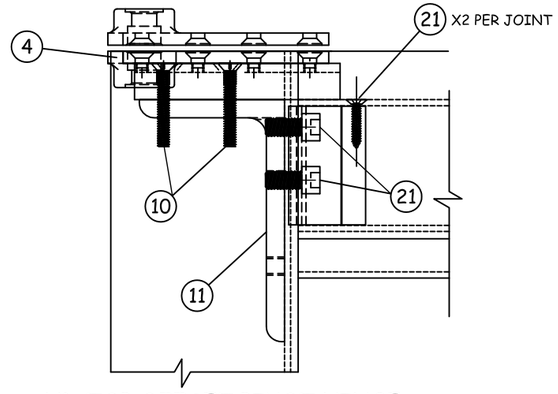

HD TOP OFFSET PIVOT HINGE
VERTICAL SECTION - FRONT VIEW

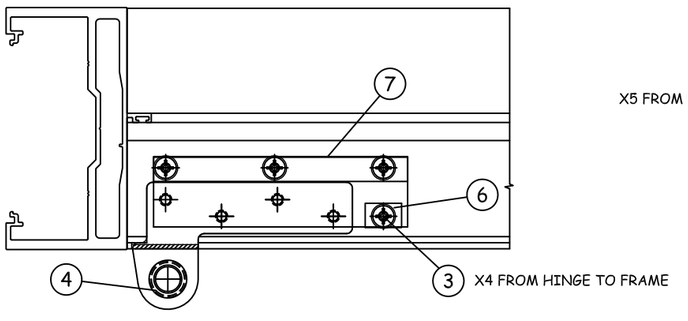

HD TOP OFFSET PIVOT HINGE
HORIZONTAL SECTION

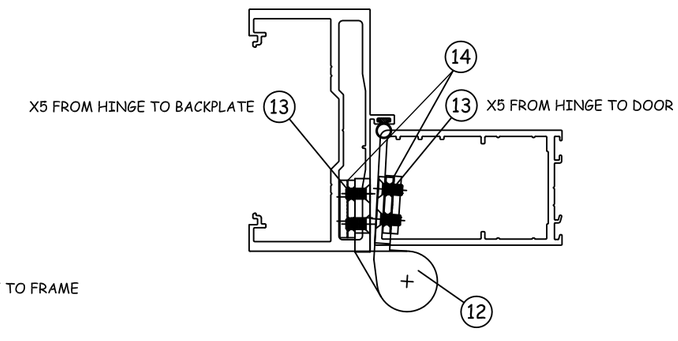

HD INTERMEDIATE OFFSET PIVOT HINGE
HORIZONTAL SECTION

35H DOOR HINGE COMPONENTS

ITEM #	PART #	DESCRIPTION	MATERIAL	MANUFACTURER
1A	P1300SS	BUTT HINGE 4 1/2" X 4"	STAINLESS STEEL	HAGER
1B	P2313	BUTT HINGE 4 1/2" X 4"	STAINLESS STEEL	MCKINNEY
2	E1-0357	BACKPLATE	ALUMINUM	YKK
3	UM1208SS	SCREW #12-24x1/2"	STAINLESS STEEL	FASTENAL
4	P-21120	180 TOP PIVOT	BRASS	RIXSON
5	P-73100	PIVOT MOUNT SHIM	ALUMINUM	RIXSON
6	P-73101	MOUNT SHIM	ZINC	RIXSON
7	P-73102	MOUNT SHIM	ZINC	RIXSON
8	12-24X0.688	SELF-DRILLING SCREW	STAINLESS STEEL	
9A	P-26014	CONTINUOUS HINGE	ALUMINUM	ROTON
9B	P-26103	CONTINUOUS HINGE	ALUMINUM	SELECT
10	FM-2528	FHMS - #12-24X1-3/4"	ZINC	
11	E1-0371	SUPPORT ANGLE	6063-T5	RIXSON
12	P-22101	M-19 INTERMEDIATE PIVOT	BRASS	RIXSON
13		FHMS - 1/4"-20X3/4"	STAINLESS STEEL	RIXSON
14	P1290	HINGE BACKER PLATE	ZINC CHROMATE	RIXSON
15	FM-2520	FHMS - 1/4"-20X1-1/8"	STAINLESS STEEL	
16	E1-1134	BOTTOM PIVOT SHIM	ALUMINUM	RIXSON
17A	P-21105	147 BOTTOM PIVOT	STAINLESS STEEL	RIXSON
17B	P-21106	147 BOTTOM PIVOT	STAINLESS STEEL	RIXSON
17C	P-21107	147 BOTTOM PIVOT	STAINLESS STEEL	RIXSON
17D	P-21108	147 BOTTOM PIVOT	STAINLESS STEEL	RIXSON
18	FM-2510	FHMS - 1/4"-20X5/8"	STAINLESS STEEL	
19	E1-0346	SUPPORT ANGLE	6063-T5	RIXSON
20		PH SMS AP TYPE #10X1"	STAINLESS STEEL	
21		3/8"-16X5/8" SOCKET HEAD CAP SCREW	STAINLESS STEEL	

NOTE: THESE ITEM NUMBERS APPLY ONLY TO HINGE DETAILS ON PAGES 18 & 19. SEE PAGE 15 FOR ITEM NUMBERS APPLICABLE TO THE REMAINDER OF DRAWING.

YKK AP AMERICA INC.
332 FIRETOWER ROAD
DUBLIN, GEORGIA 31021
PH: (478) 277-2549 FX: (678) 838-6001

TITLE: SERIES 35H ALUMINUM OUTSWING ENTRANCE DOOR
HINGE DETAILS (1)

PREPARED BY:
BUILDING DROPS, INC.
398 E. DANIA BEACH BLVD. #338
DANIA BEACH, FL 33004
PH: (954) 399-8478 FX: (954) 744-4738

REVISIONS

NO.	DESCRIPTION	BY	DATE

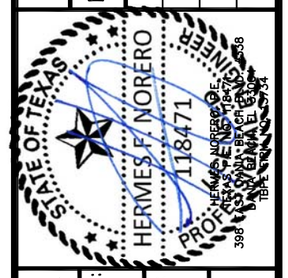

DATE: 09.17.14
DWN BY: SM
CHK BY: MSS
SCALE: NTS

DWG #: YKK042

SHEET: 18 OF 19

2/16/2015 5:16 PM

s:\projects\ykk ap america, inc\1di-14-0810 proposal for 1di submittal - commercial products\35h & 50 h (fil16654)\dwg\ykk042 - 35h.dwg

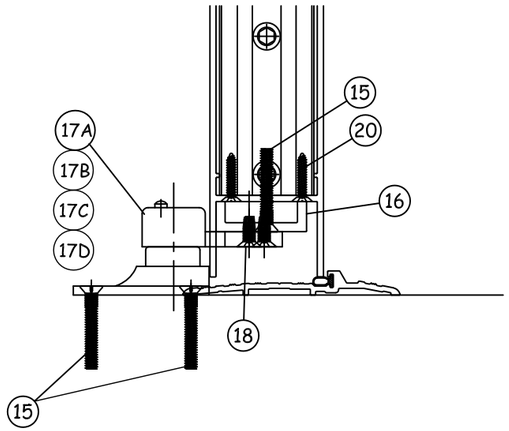

HD BOTTOM OFFSET PIVOT HINGE
VERTICAL SECTION - SIDE VIEW

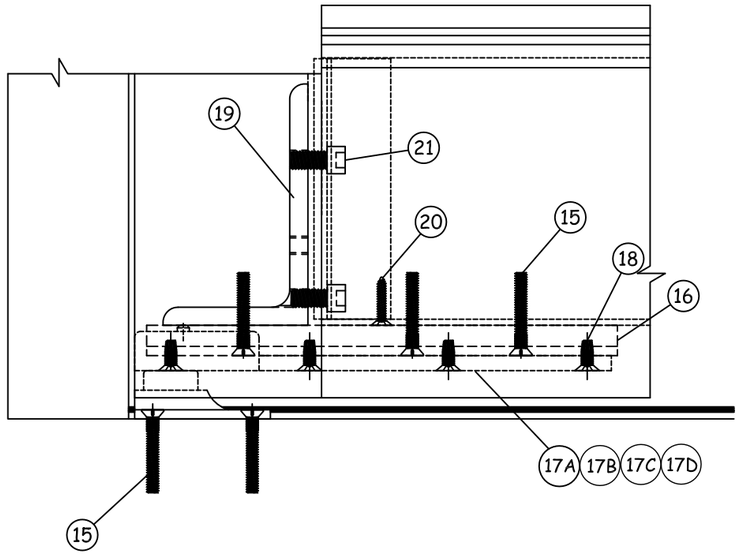

HD BOTTOM OFFSET PIVOT HINGE
VERTICAL SECTION - FRONT VIEW

YKK AP AMERICA INC.
332 FIRETOWER ROAD
DUBLIN, GEORGIA 31021
PH: (478) 277-2549 FX: (678) 838-6001

TITLE: SERIES 35H ALUMINUM OUTSWING ENTRANCE DOOR
HINGE DETAILS (2)

PREPARED BY:
BUILDING DROPS, INC.
398 E. DANIA BEACH BLVD. #338
DANIA BEACH, FL 33004
PH: (954) 399-8478 FX: (954) 744-4738

REVISIONS

NO.	DESCRIPTION	BY	DATE

STATE OF TEXAS
HERMES F. NORIEGA
118471
PROFESSIONAL ENGINEER

DATE: 09.17.14
DWN BY: SM
CHK BY: MSS
SCALE: NTS

DWG #: YKK042

SHEET: 19 OF 19

2/16/2015 5:14 PM

s:\projects\ykk ap america, inc\tdi-14-0810 proposal for tdi submittal - commercial products\35h & 80 h (fil66541)\dwg\ykk042 - 35h.dwg