THERMA TRU®

THERMA TRU DOORS

118 INDUSTRIAL DR., EDGERTON, OH 43517

FLUSH GLAZED FIBERGLASS DOOR

INSWING/OUTSWING

"NON-IMPACT"

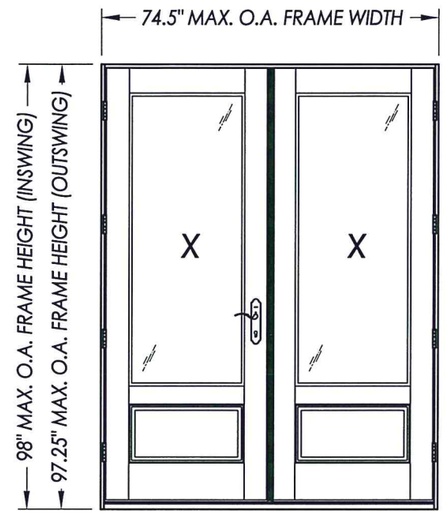

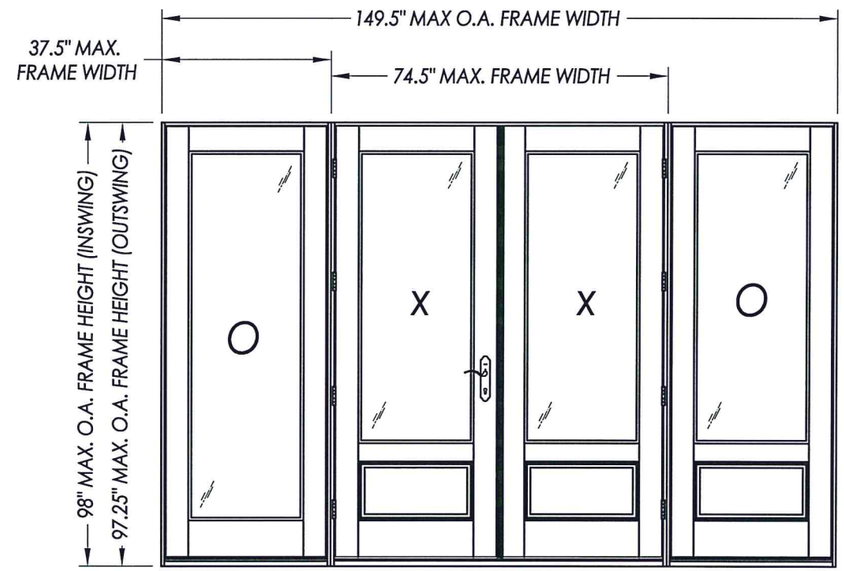

EVALUATED FOR USE IN THE STATE OF TEXAS

The Fiberglass Door described herein complies with the 2006 International Residential Code (IRC), Sections R301 & R613 and the 2006 International Building Code (IBC), Sections 1405.12, 1609, 1714.5, 2403 and 2404 (including Texas revisions) subject to the following conditions:

1. *Anchors shall be as listed and spaced as shown in the details. Anchor embedment to base material shall be beyond wall dressing or stucco.*
2. *When used in areas requiring wind-borne debris protection this product is required to be protected with an impact resistant covering that complies with Section R301.2.1.2 of the IRC and Section 1609.1.2 of the IBC.*
3. *Allowable design pressure requirements must be equal to or less than the design pressure rating shown in the design pressure chart, sheet 1 of this drawing.*
4. *Conditions not covered by this drawing are subject to further engineering analysis.*

TABLE OF CONTENTS

SHEET #	DESCRIPTION
1	Table of contents, design pressure and general notes
2	Door/Sidelite panel & glazing details
3	Sidelite panel & glazing details
4	Elevatons
5	Horizontal cross sections
6	Vertical cross sections
7	Frame anchoring & hardware details
8	Bill of materials and components

CONFIGURATION	MAX FRAME DIMENSION	DESIGN PRESSURE (PSF) INSWING		DESIGN PRESSURE (PSF) OUTSWING	
		POSITIVE	NEGATIVE	POSITIVE	NEGATIVE
XX	74.5" X 98.0"	+35.0	-45.0	+40.0	-40.0
OXXO	149.5" X 98.0"	+35.0	-45.0	+40.0	-40.0

STATE OF TEXAS
LYNDON F. SCHMIDT
104123
LICENSED PROFESSIONAL ENGINEER
7-28-15

Documents Prepared By: Lyndon F. Schmidt, P.E.
TEXAS P.E. #104123

RW BUILDING CONSULTANTS, INC.
P.O. Box 230 Valrico FL. 33595
Phone No.: 813.659.9197

TEXAS BOARD OF PROFESSIONAL ENGINEERS
CERTIFICATE OF REGISTRATION # F-11852

PRODUCT: THERMA-TRU FLUSH GLAZED DOOR

PART OR ASSEMBLY: TYPICAL ELEVATION, DESIGN PRESSURES & GENERAL NOTES

NO.	DATE	BY

REVISIONS

DATE: 7/28/15
SCALE: N.T.S.
DWG. BY: JK
CHK. BY: LFS
DRAWING NO.: TX-4562
SHEET 1 OF 8

© 2015 R.W. BUILDING CONSULTANTS INC.

R:\Clients\Therma Tru PERMANENT\B - Texas Dept of Ins\TDI - DR XXX Flush Glazed Doors\C - Drawings\Current\TX-4560-62.dwg, TX-4562

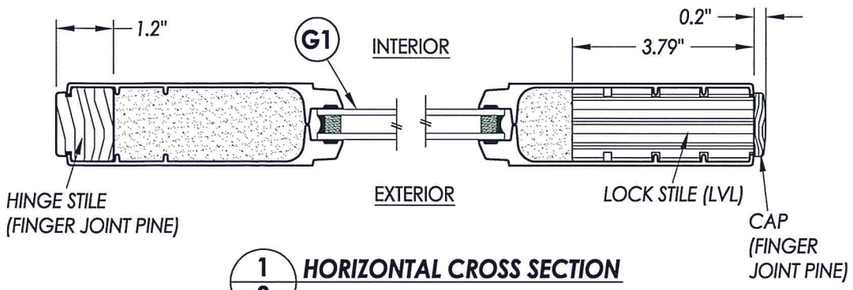

1/2 **HORIZONTAL CROSS SECTION**

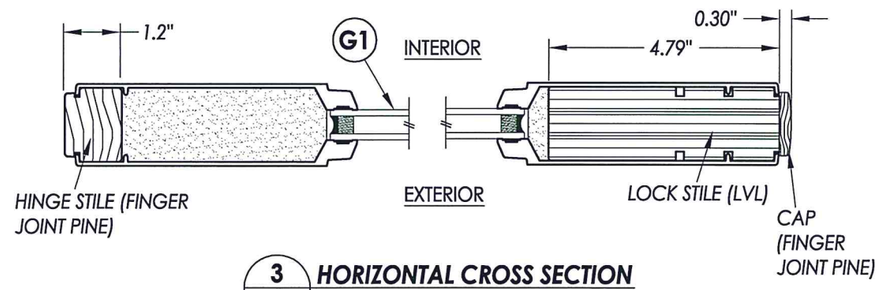

3/2 **HORIZONTAL CROSS SECTION**

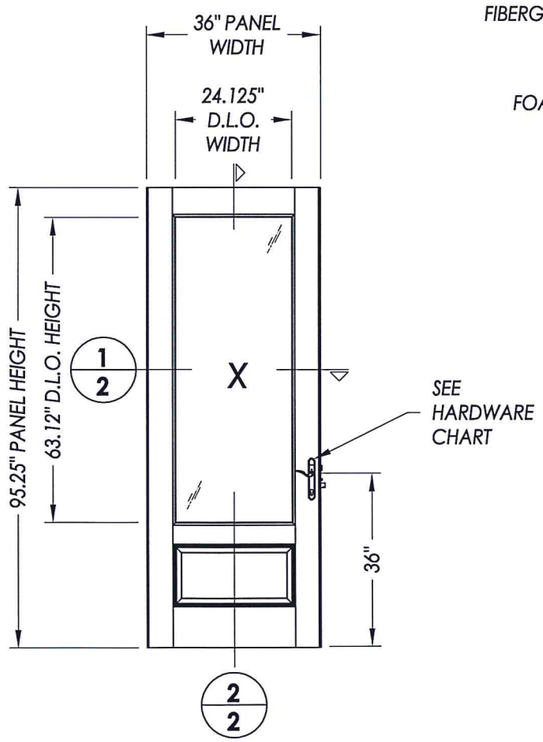

40 **3'-0" DOOR/SIDELITE PANEL**
3/4 Lite (Flush Glazed)

FIBERGLASS SKIN: 0.077" THICKNESS
FOAM CORE: POLYURETHANE

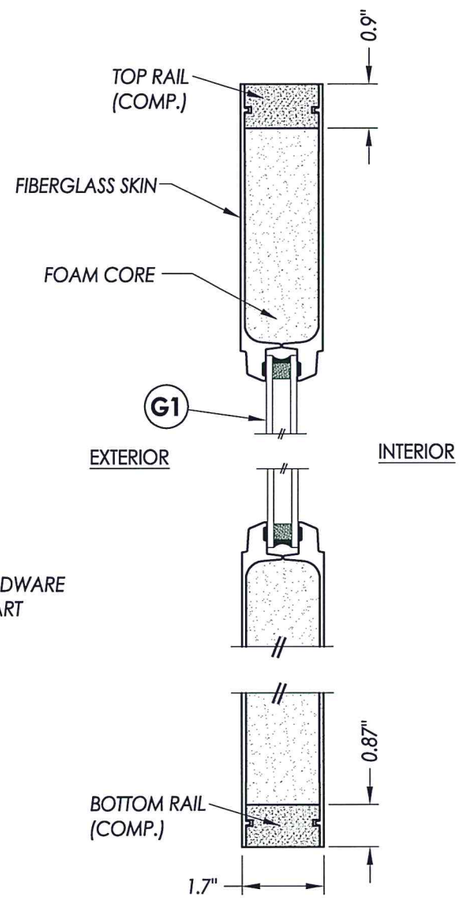

2/2 **VERTICAL CROSS SECTION**

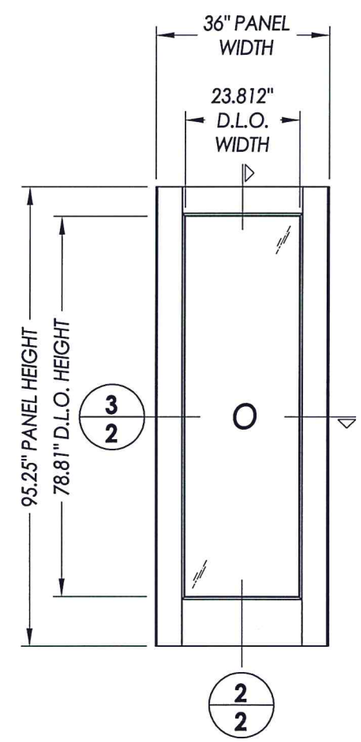

50 **3'-0" SIDELITE PANEL**
Full Lite (Flush Glazed)

FIBERGLASS SKIN: 0.07" THICKNESS
FOAM CORE: POLYURETHANE

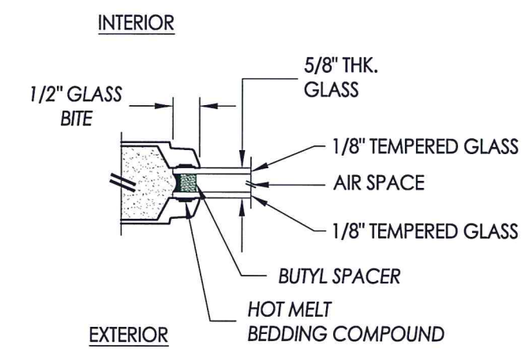

G1 **GLAZING DETAIL**
Flush Glazed

HARDWARE TABLE	
MANUFACTURER	MODEL
Therma-Tru	MULTI POINT LOCK: MPDGSB

STATE OF TEXAS
LYNDON F. SCHMIDT
104123
LICENSED
PROFESSIONAL ENGINEER

Documents Prepared By: Lyndon F. Schmidt, P.E.
TEXAS P.E. #104123

RW BUILDING CONSULTANTS, INC.
P.O. Box 230 Valrico FL. 33595
Phone No.: 813.659.9197

TEXAS BOARD OF PROFESSIONAL ENGINEERS
CERTIFICATE OF REGISTRATION # F-11852

PRODUCT: THERMA-TRU FLUSH GLAZED DOOR

PART OR ASSEMBLY: DOOR PANEL & GLAZING DETAILS

NO.	DATE	REVISIONS	BY

DATE: 7/28/15
SCALE: N.T.S.
DWG. BY: JK
CHK. BY: LFS
DRAWING NO.: TX-4562
SHEET 2 OF 8

© 2015 R.W. BUILDING CONSULTANTS INC.

R:\Clients\Therma Tru PERMANENT\B - Texas Dept of Ins\TDI - DR XXX Flush Glazed Doors\C - Drawings\Current\TX-4560-62.dwg, 2.3

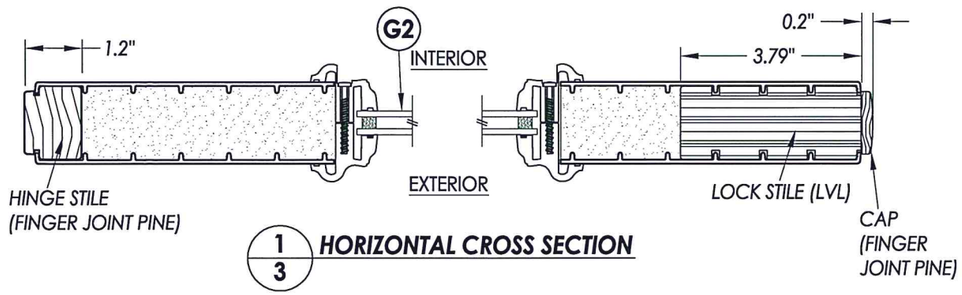

1/3 **HORIZONTAL CROSS SECTION**

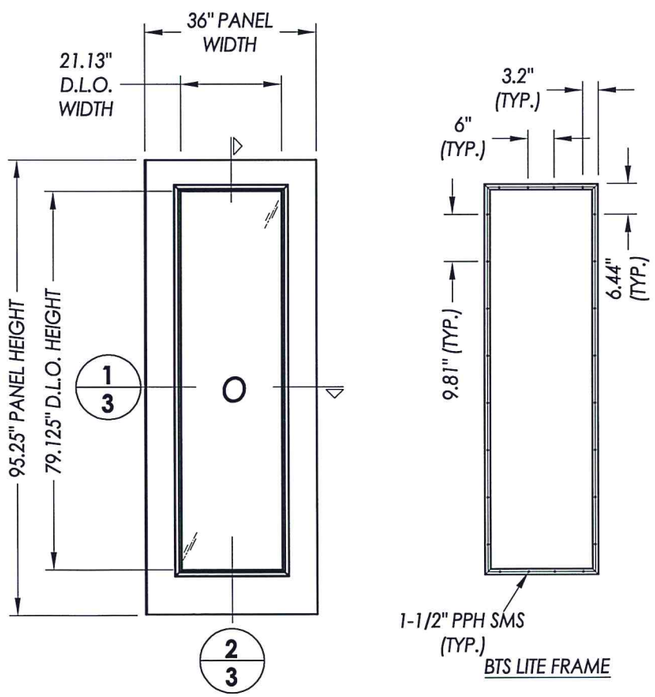

60 **3'-0" SIDELITE PANEL**
Full Lite (BTS Lite Frame)

FIBERGLASS SKIN: 0.07" THICKNESS
FOAM CORE: POLYURETHANE

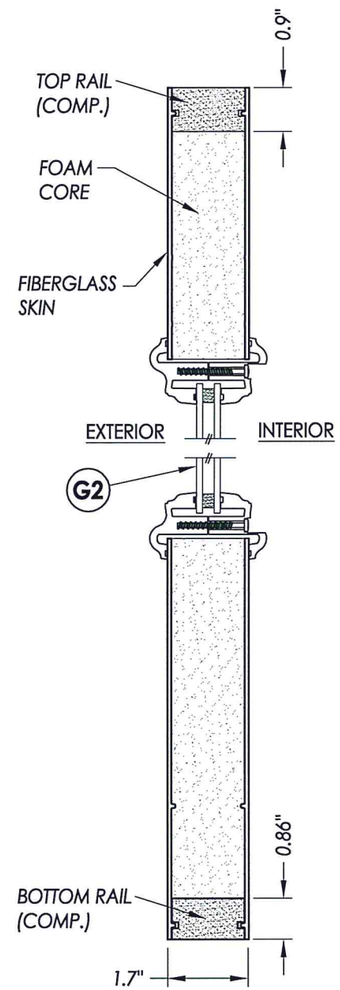

2/3 **VERTICAL CROSS SECTION**

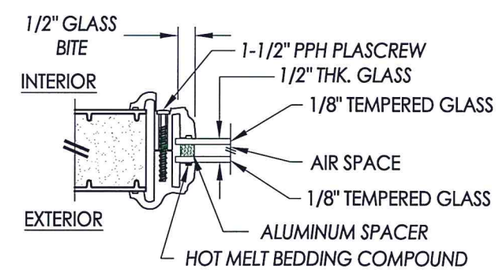

G2 **GLAZING DETAIL**
BTS Lite Frame

STATE OF TEXAS
LYNDON F. SCHMIDT
104123
LICENSED
PROFESSIONAL ENGINEER

Documents Prepared By: Lyndon F. Schmidt, P.E.
TEXAS P.E. #104123

RW BUILDING CONSULTANTS, INC.
P.O. Box 230 Valrico FL. 33595
Phone No.: 813.659.9197

TEXAS BOARD OF PROFESSIONAL ENGINEERS
CERTIFICATE OF REGISTRATION # F-11852

PRODUCT: THERMA-TRU FLUSH GLAZED DOOR

PART OR ASSEMBLY: SIDELITE PANEL & GLAZING DETAILS

NO.	DATE	REVISIONS	BY

DATE: 7/28/15
SCALE: N.T.S.
DWG. BY: JK
CHK. BY: LFS
DRAWING NO.: TX-4562
SHEET 3 OF 8

© 2015 R.W. BUILDING CONSULTANTS INC.

R:\Clients\Therma Tru PERMANENT\B - Texas Dept of Ins\TDI - DR XXX Flush Glazed Doors\C - Drawings\Current\TX-4560-62.dwg, 3.3

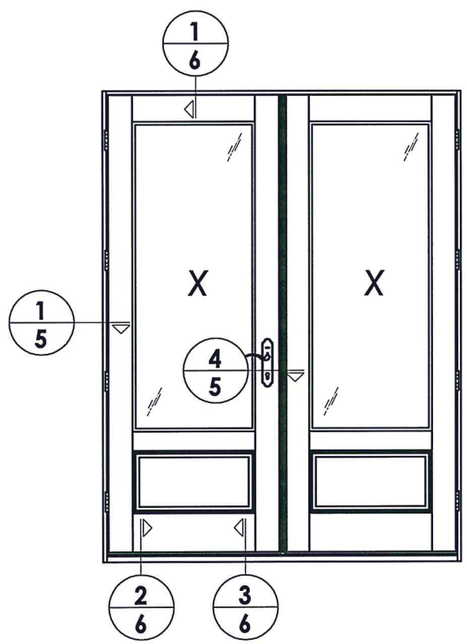

XX

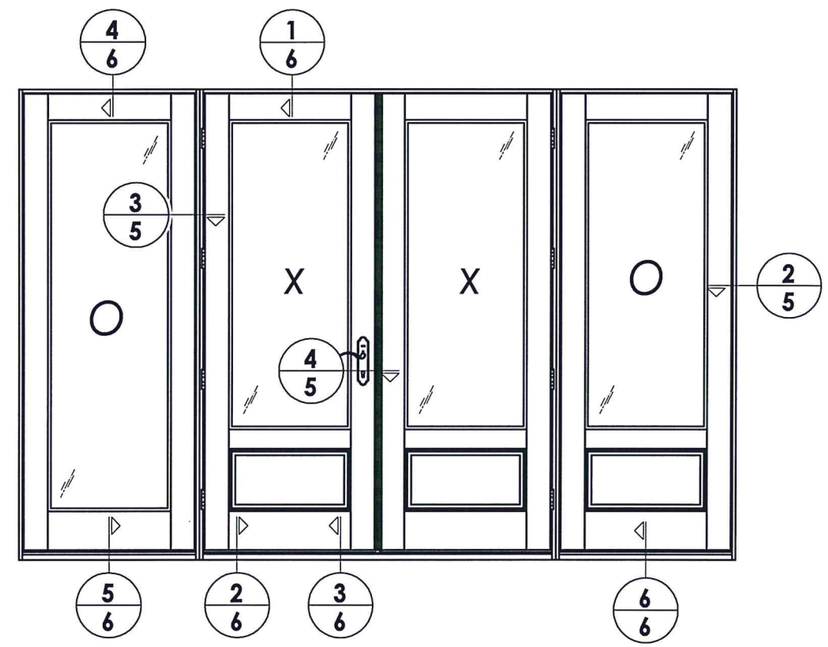

OXXO

STATE OF TEXAS
LYNDON F. SCHMIDT
104123
LICENSED
PROFESSIONAL ENGINEER

Documents Prepared By: Lyndon F. Schmidt, P.E.
TEXAS P.E. #104123

RW BUILDING CONSULTANTS, INC.
P.O. Box 230 Valrico FL. 33595
Phone No.: 813.659.9197

TEXAS BOARD OF PROFESSIONAL ENGINEERS
CERTIFICATE OF REGISTRATION # F-11852

PRODUCT: THERMA-TRU FLUSH GLAZED DOOR

PART OR ASSEMBLY: ELEVATIONS

NO.	DATE	BY

REVISIONS

DATE: 7/28/15
SCALE: N.T.S.
DWG. BY: JK
CHK. BY: LFS
DRAWING NO.: TX-4562
SHEET 4 OF 8

© 2015 R.W. BUILDING CONSULTANTS INC.

R:\Clients\Therma Tru PERMANENT\B - Texas Dept of Ins\TDI - DR XXX Flush Glazed Doors\C - Drawings\Current\TX-4560-62.dwg, 4.3

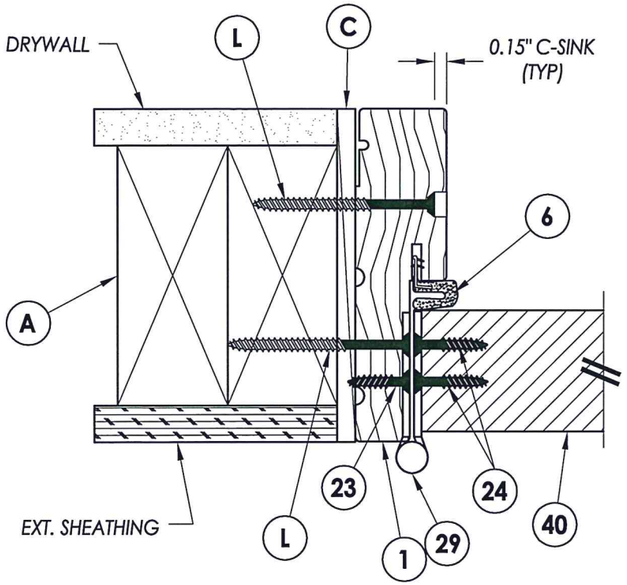

1/5 HORIZONTAL CROSS SECTION
Outswing Shown (Inswing similar)

INTERIOR

EXTERIOR

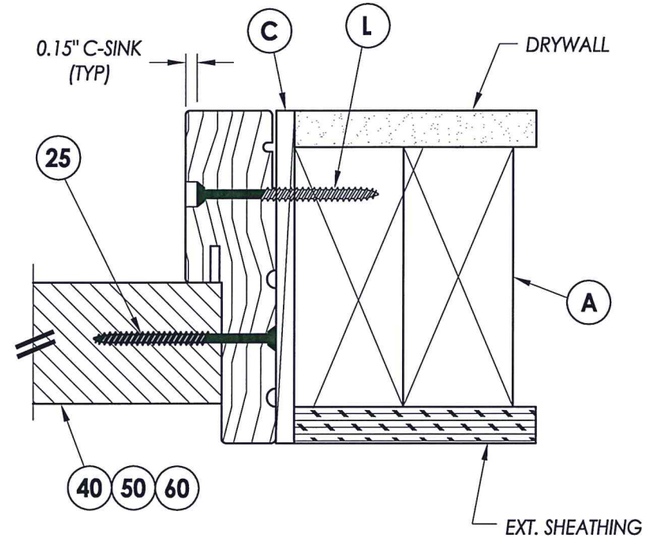

2/5 HORIZONTAL CROSS SECTION
Outswing Shown (Inswing similar)

Note:
1. Sidelite assembly screws located 8" from each end then 2 more equally spaced (4 total).

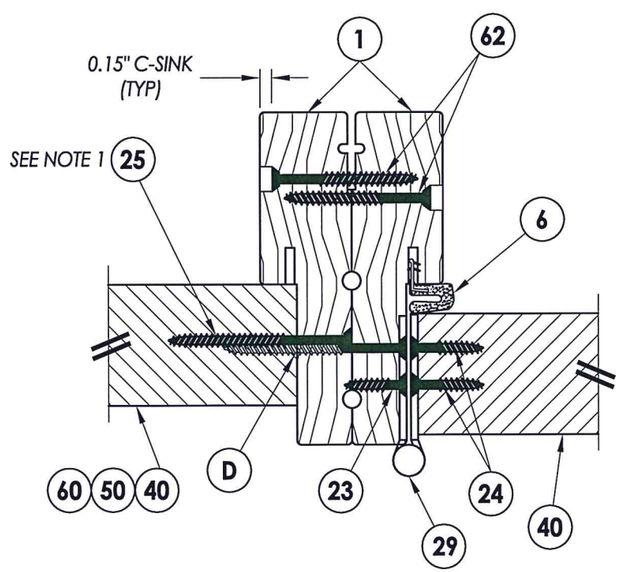

3/5 HORIZONTAL CROSS SECTION
Outswing Shown (Inswing similar)

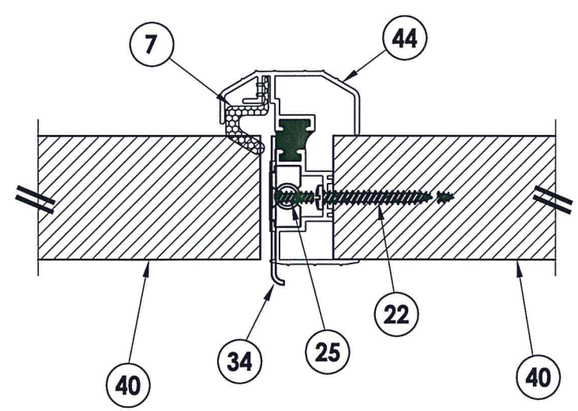

4/5 HORIZONTAL CROSS SECTION
Outswing Shown (Inswing similar)

STATE OF TEXAS
LYNDON F. SCHMIDT
104123
LICENSED
PROFESSIONAL ENGINEER

Documents Prepared By: Lyndon F. Schmidt, P.E.
TEXAS P.E. #104123

RW BUILDING CONSULTANTS, INC.
P.O. Box 230 Valrico FL. 33595
Phone No.: 813.659.9197

TEXAS BOARD OF PROFESSIONAL ENGINEERS
CERTIFICATE OF REGISTRATION # F-11852

PRODUCT: THERMA-TRU FLUSH GLAZED DOOR

PART OR ASSEMBLY: HORIZONTAL CROSS SECTIONS

NO.	DATE	BY

REVISIONS

DATE: 7/28/15
SCALE: N.T.S.
DWG. BY: JK
CHK. BY: LFS
DRAWING NO.: TX-4562
SHEET 5 OF 8

© 2015 R.W. BUILDING CONSULTANTS INC.

R:\Clients\Therma Tru PERMANENT\B - Texas Dept of Ins\TDI - DR XXX Flush Glazed Doors\C - Drawings\Current\TX-4560-62.dwg, 5.3

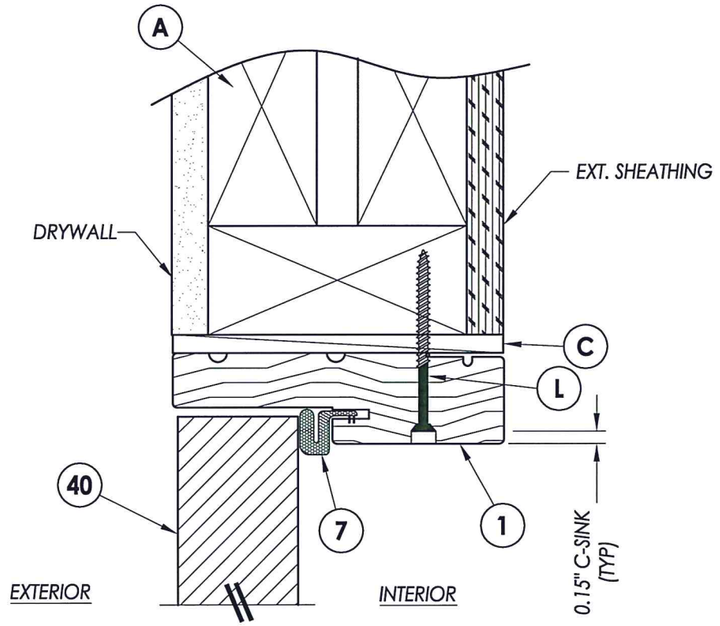

1/6 VERTICAL CROSS SECTION
Outswing Shown (Inswing similar)

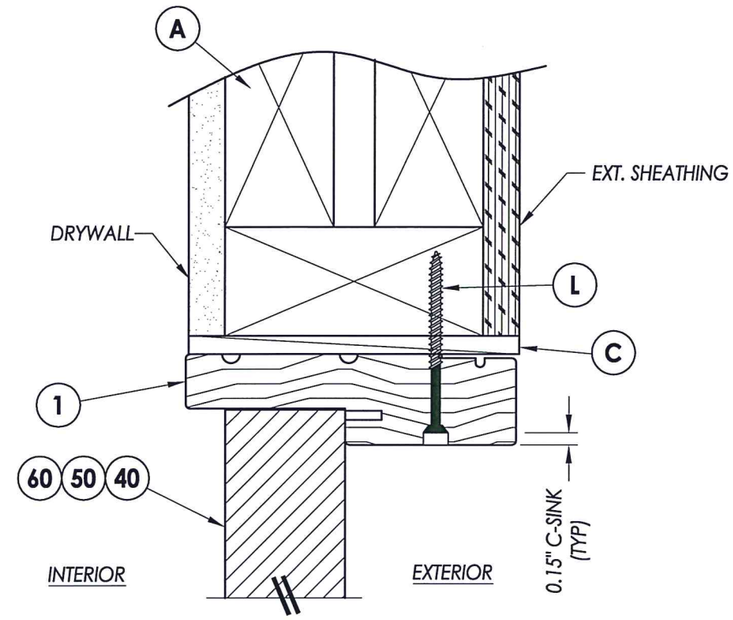

4/6 VERTICAL CROSS SECTION
Outswing Shown (Inswing similar)

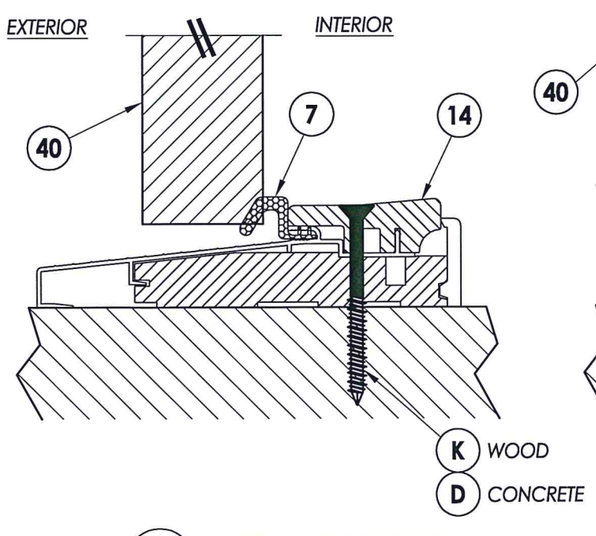

2/6 VERTICAL CROSS SECTION
Outswing Sill

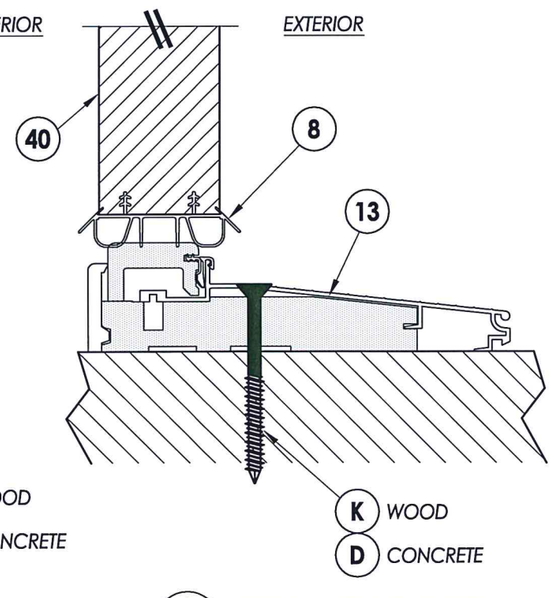

3/6 VERTICAL CROSS SECTION
Inswing Sill

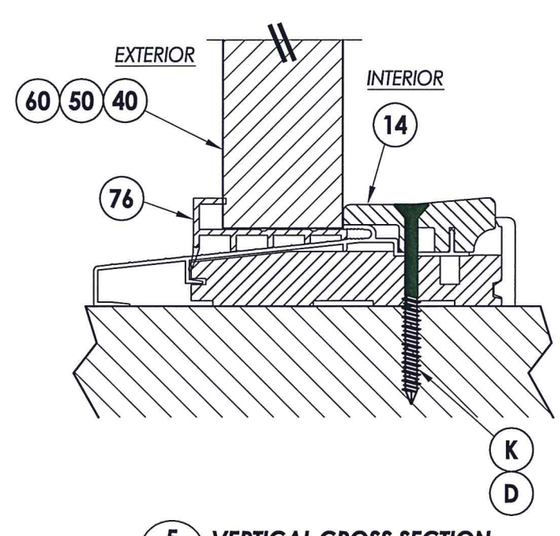

5/6 VERTICAL CROSS SECTION
Outswing Sill

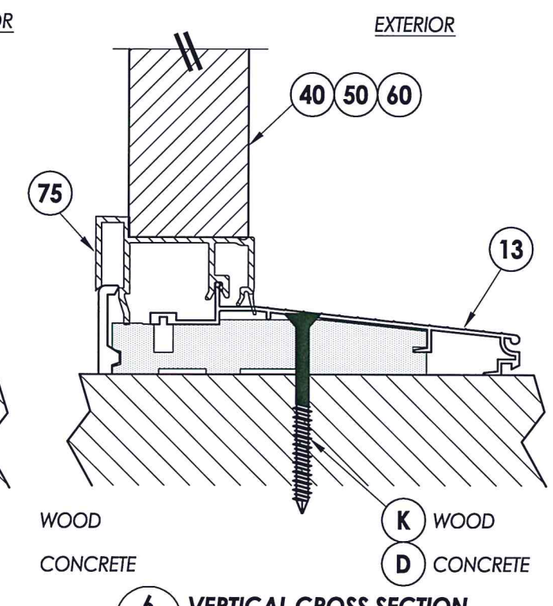

6/6 VERTICAL CROSS SECTION
Inswing Sill

STATE OF TEXAS
LYNDON F. SCHMIDT
104123
LICENSED PROFESSIONAL ENGINEER
7.28.15

Documents Prepared By: Lyndon F. Schmidt, P.E.
TEXAS P.E. #104123
RW BUILDING CONSULTANTS, INC.
P.O. Box 230 Valrico FL. 33595
Phone No.: 813.659.9197
TEXAS BOARD OF PROFESSIONAL ENGINEERS
CERTIFICATE OF REGISTRATION # F-11852

PRODUCT: THERMA-TRU FLUSH GLAZED DOOR

PART OR ASSEMBLY: VERTICAL CROSS SECTIONS

NO.	DATE	BY

REVISIONS

DATE: 7/28/15
SCALE: N.T.S.
DWG. BY: JK
CHK. BY: LFS
DRAWING NO.: TX-4562
SHEET 6 OF 8

© 2015 R.W. BUILDING CONSULTANTS INC.

E:\Clients\Therma Tru PERMANENT\B - Texas Dept of Ins\TDI - DR XXX Flush Glazed Doors\C - Drawings\Current\TX-4560-62.dwg, 6.3

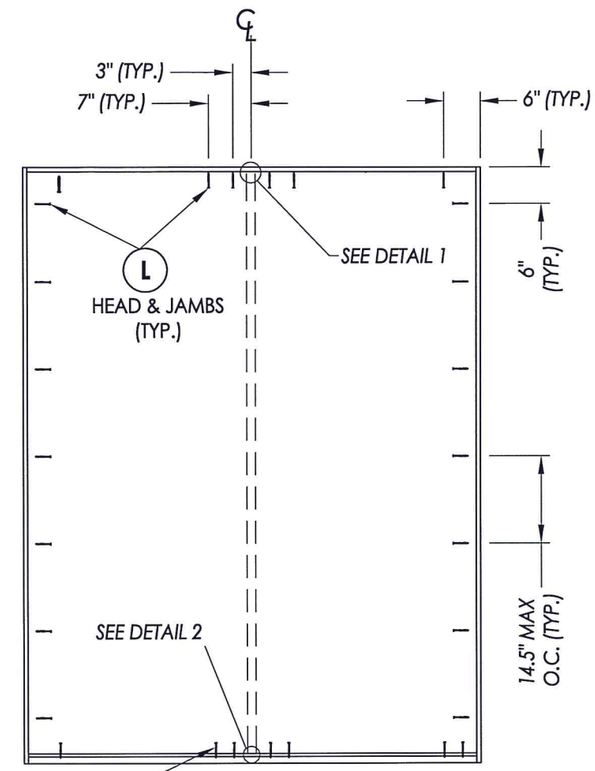

FRAME ANCHORING
XX

K WOOD
D CONCRETE
SILL (TYP.)

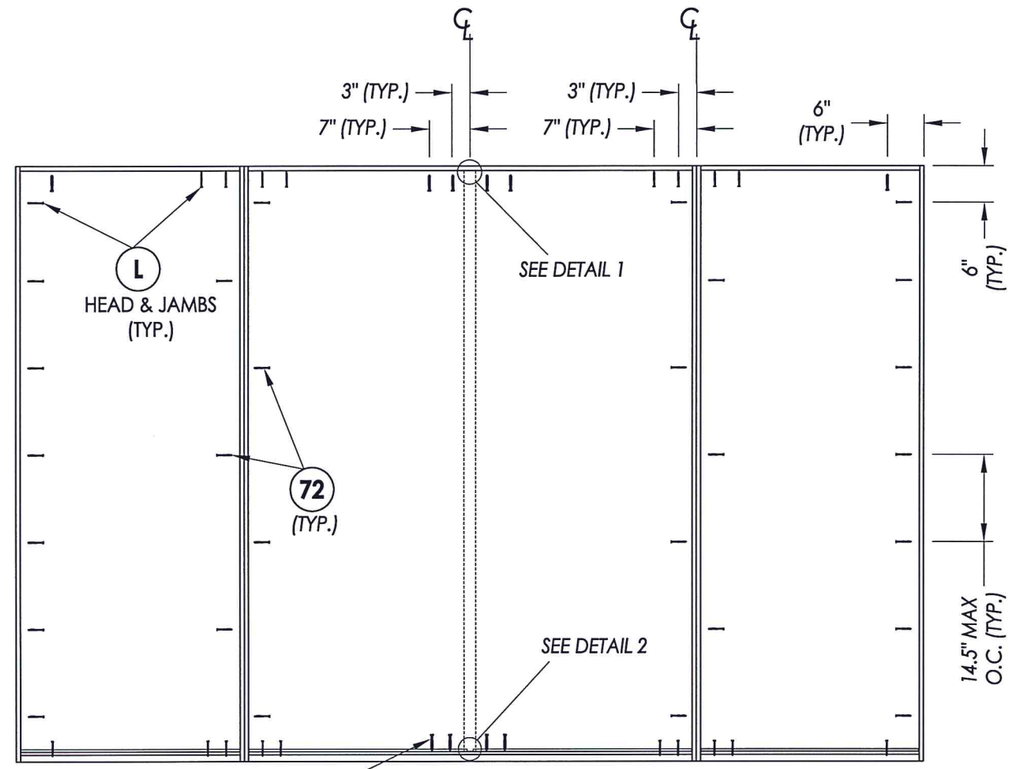

FRAME ANCHORING
XX

K WOOD
D CONCRETE
SILL (TYP.)

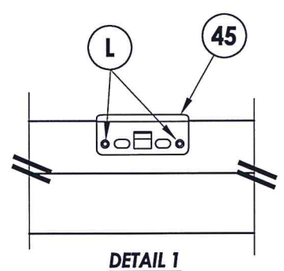

DETAIL 1
Shootbolt strike plate @ head

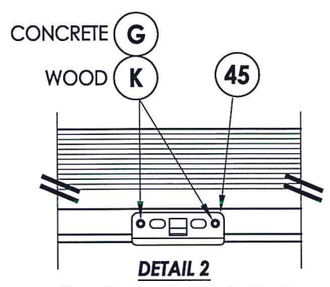

DETAIL 2
Shootbolt strike plate @ sill
Inswing

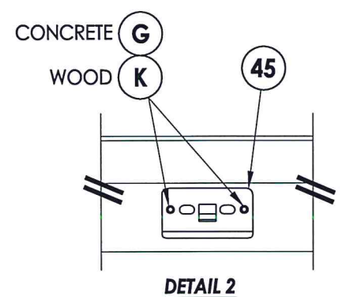

DETAIL 2
Shootbolt strike plate @ sill
Outswing

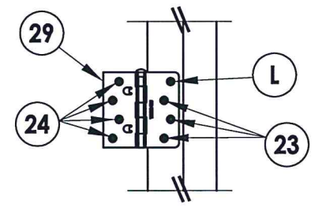

HINGE DETAIL

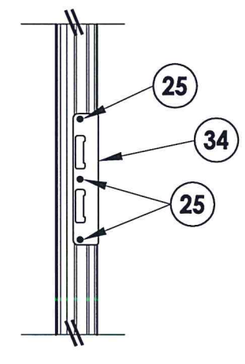

LATCH & DEADBOLT STRIKE PLATE DETAIL

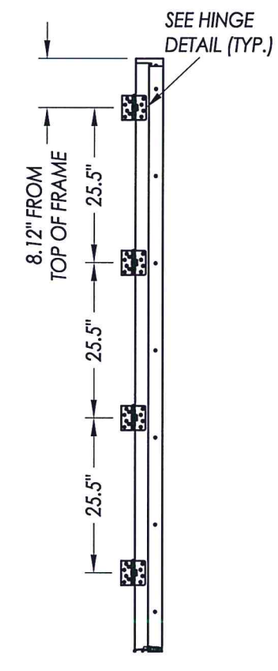

HINGE JAMB

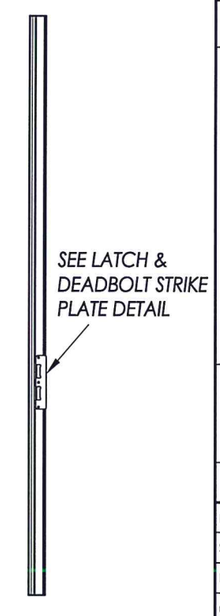

ASTRAGAL STRIKE

FRAME ANCHORING
2X stud framing
w/ wood/concrete substrate

STATE OF TEXAS
LYNDON F. SCHMIDT
104123
LICENSED
PROFESSIONAL ENGINEER
7.28.15

Documents Prepared By: Lyndon F. Schmidt, P.E.
TEXAS P.E. #104123
RW BUILDING CONSULTANTS, INC.
P.O. Box 230 Valrico FL. 33595
Phone No.: 813.659.9197
TEXAS BOARD OF PROFESSIONAL ENGINEERS
CERTIFICATE OF REGISTRATION # F-11852

PRODUCT: THERMA-TRU FLUSH GLAZED DOOR

PART OR ASSEMBLY: FRAME ANCHORING & HARDWARE DETAILS

NO.	DATE	REVISIONS	BY

DATE: 7/28/15
SCALE: N.T.S.
DWG. BY: JK
CHK. BY: LFS
DRAWING NO.: TX-4562
SHEET 7 OF 8

© 2015 R.W. BUILDING CONSULTANTS INC.

G:\Clients\Therma Tru PERMANENT\B - Texas Dept of Ins\TDI - DR XXX Flush Glazed Doors\C - Drawings\Current\TX-4560-62.dwg, 7.3

BILL OF MATERIALS

ITEM #	DESCRIPTION	MATERIAL
A	2X FRAMING (SG >= 0.42)	WOOD
C	1/4" MAX. SHIM SPACE	-
D	1/4" PFH ITW CONCRETE SCREW (1-3/4" MIN. EMBEDMENT)	STEEL
G	3/16" PFH ITW CONCRETE SCREW (1-3/4" MIN. EMBEDMENT)	STEEL
K	#10 PFH WOOD SCREW (1-1/2" MIN. EMBEDMENT)	STEEL
L	#10 X 2-1/2" PFH WOOD SCREW (1.15" MIN. EMBEDMENT)	STEEL
1	JAMB - FINGER JOINTED PINE	WOOD
6	WEATHERSTRIP (Medium Reach by Therma-Tru)	FOAM
7	WEATHERSTRIP (Long Reach by Therma-Tru)	FOAM
8	SWEEP	VINYL
13	INSWING THRESHOLD	ALUM/COMP
14	OUTSWING THRESHOLD	ALUM/COMP
23	#10 x 3/4" PFH WOOD SCREW	STEEL
24	#10 x 1" PFH WOOD SCREW	STEEL
25	#8 x 2-1/2" PFH WOOD SCREW	STEEL
27	LATCH STRIKE PLATE	STEEL
28	DEADBOLT STRIKE PLATE	STEEL
29	4" X 4" HINGE	STEEL
34	LATCH & DEADBOLT STRIKE PLATE	STEEL
40	3'-0" DOOR/SIDELITE PANEL - 3/4 LITE (FLUSH GLAZED)	-
44	ASTRAGAL (THERMA-TRU)	ALUM
45	SHOOTBOLT STRIKE PLATE	STEEL
50	3'-0" SIDELITE PANEL - FULL LITE (FLUSH GLAZED)	-
60	3'-0" SIDELITE PANEL - FULL LITE (BTS LITE FRAME)	-
72	#10 X 2" PFH WOOD SCREW	STEEL
75	SIDELITE SPACER (INSWING)	PVC
76	SIDELITE SPACER (OUTSWING)	PVC

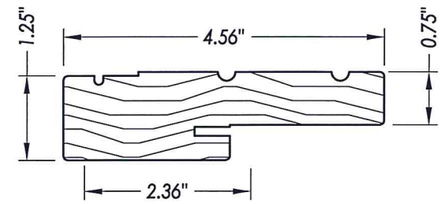

1 WOOD JAMB

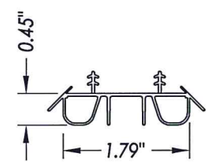

8 SWEEP

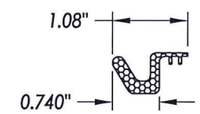

6 WEATHERSTRIP Medium Reach

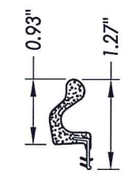

7 WEATHERSTRIP Long Reach

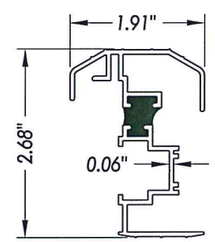

44 ASTRAGAL

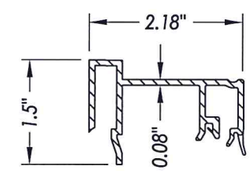

75 SIDELITE SPACER Inswing

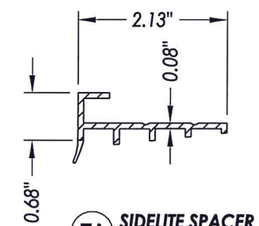

76 SIDELITE SPACER Outswing

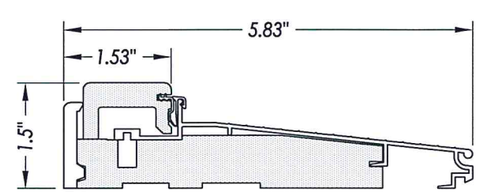

13 INSWING THRESHOLD

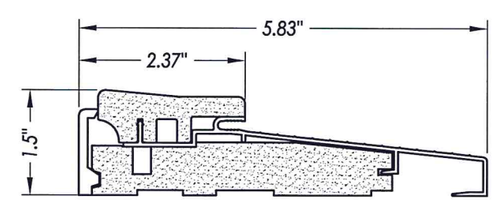

14 OUTSWING THRESHOLD

CONCRETE ANCHOR NOTES:

1. Concrete anchor locations at the corners may be adjusted to maintain the min. edge distance to mortar joints.
2. Concrete anchor locations noted as "MAX. ON CENTER" must be adjusted to maintain the min. edge distance to mortar joints, additional concrete anchors may be required to ensure the "MAX. ON CENTER" dimension are not exceeded.
3. Concrete anchor table:

ANCHOR TYPE	ANCHOR SIZE	MIN. EMBEDMENT	MIN. CLEARANCE TO MASONRY EDGE	MIN. CLEARANCE TO ADJACENT ANCHOR
ITW TAPCON®	3/16"	1-3/4"	3"	1-1/2"
	1/4"	1-3/4"	1-1/2"	4"
ELCO ULTRACON®	1/4"	1-3/4"	1"	4"

MASONRY – 3,000 PSI MIN. CONCRETE CONFORMING TO ACI 301 OR HOLLOW BLOCK CONFORMING TO ASTM C90

STATE OF TEXAS
LYNDON F. SCHMIDT
104123
LICENSED
PROFESSIONAL ENGINEER
7.28.15

Documents Prepared By: Lyndon F. Schmidt, P.E.
TEXAS P.E. #104123

RW BUILDING CONSULTANTS, INC.
P.O. Box 230 Valrico FL. 33595
Phone No.: 813.659.9197

TEXAS BOARD OF PROFESSIONAL ENGINEERS
CERTIFICATE OF REGISTRATION # F-11852

PRODUCT: THERMA-TRU FLUSH GLAZED DOOR

PART OR ASSEMBLY: BILL OF MATERIALS & COMPONENTS

NO.	DATE	REVISIONS	BY

DATE: 7/28/15
SCALE: N.T.S.
DWG. BY: JK
CHK. BY: LFS
DRAWING NO.: TX-4562
SHEET 8 OF 8

© 2015 R.W. BUILDING CONSULTANTS INC.

R:\Clients\Therma Tru PERMANENT\B - Texas Dept of Ins\TDI - DR XXX Flush Glazed Doors\C - Drawings\Current\TX-4560-62.dwg, 8.3