IRON DOORS UNLIMITED

5000 Kimberly Way
Loudon, TN 37774

GLAZED IRON SINGLE DOOR

INSWING

"IMPACT"

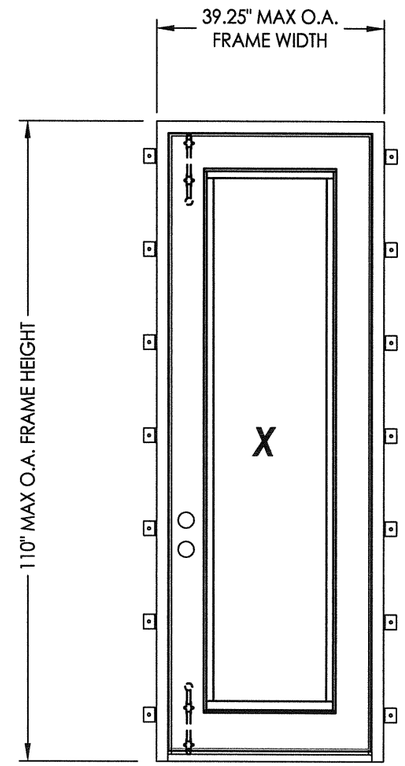

EVALUATED FOR USE IN THE STATE OF TEXAS

The Iron Door System described herein complies with the 2006 International Residential Code (IRC), Sections R301 & R613 and the 2006 International Building Code (IBC), Sections 1405.12, 1609, 1714.5, 2403 and 2404 (including Texas revisions) subject to the following conditions:

1. Anchors shall be as listed and spaced as shown in the details. Anchor embedment to base material shall be beyond wall dressing or stucco.
2. This system has been tested and evaluated as a large missile impact protective system for installation in the Seaward, Inland I and Inland II areas. This product meets missile level "D" as defined in ASTM E 1996.
3. Allowable design pressure requirements must be equal to or less than the design pressure rating shown in the design pressure chart, sheet 1 of this drawing.
4. Conditions not covered by this drawing are subject to further engineering analysis.

TABLE OF CONTENTS

SHEET#	DESCRIPTION
1	Typical elevations, design pressures, & general notes
2	Door panel details
3	Horizontal and vertical cross sections
4	Frame anchoring
5	Bill of materials and components

SWING	OVERALL FRAME DIMENSION	OVERALL D.L.O. DIMENSION	GLASS TYPE	DESIGN PRESSURE (PSF)	
				POSITIVE	NEGATIVE
INSWING	39.25" x 110"	19.5" x 93.875"	G1	+70.0	-70.0

STATE OF TEXAS
LYNDON F. SCHMIDT
104123
LICENSED PROFESSIONAL ENGINEER
2-4-15

Documents Prepared By: Lyndon F. Schmidt, P.E.
TEXAS P.E. #104123
RW BUILDING CONSULTANTS, INC.
P.O. Box 230 Valrico FL 33595
Phone No.: 813.659.9197
TEXAS BOARD OF PROFESSIONAL ENGINEERS
CERTIFICATE OF REGISTRATION # F-11852

PRODUCT: *IRON DOORS UNLIMITED GLAZED IRON DOOR*

PART OR ASSEMBLY: *TYPICAL ELEVATIONS, DESIGN PRESSURES & GENERAL NOTES*

NO.	DATE	REVISIONS	BY

DATE: 2/02/15
SCALE: N.T.S.
DWG. BY: JK
CHK. BY: LFS
DRAWING NO.: TX-4528
SHEET 1 OF 5

© 2015 R.W. BUILDING CONSULTANTS INC.

R:\Clients\Iron Doors Unlimited PERMANENT\Texas Dept of Ins\TDI - RWBC 15-1117 (X,XX IMP)\Drawings\Current\TX-4528-29.dwg, TX-4528

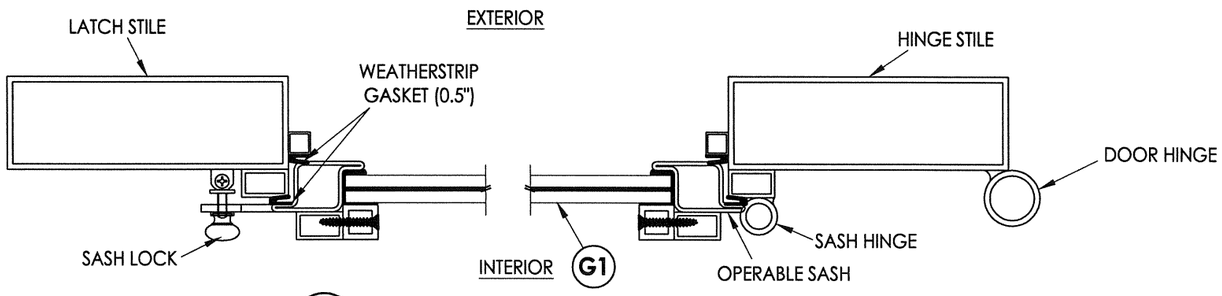

1/2 **HORIZONTAL CROSS SECTION**

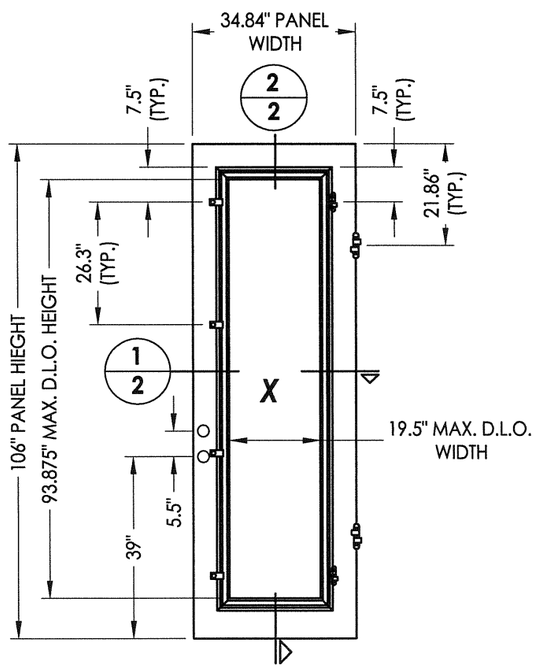

30 **DOOR PANEL**

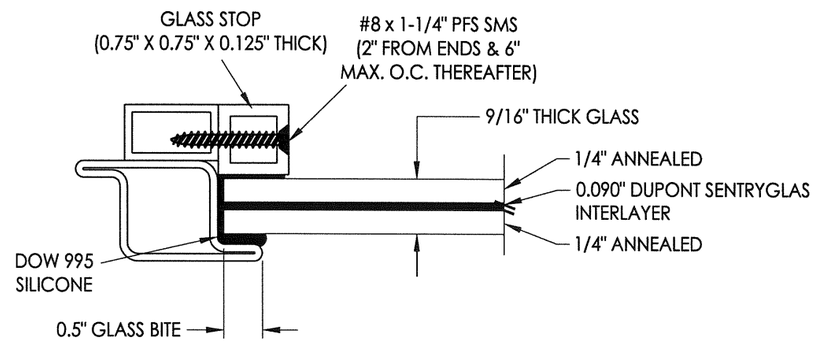

G1 **GLAZING DETAIL**

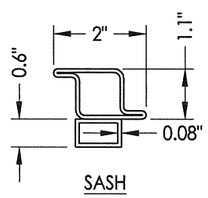

SASH

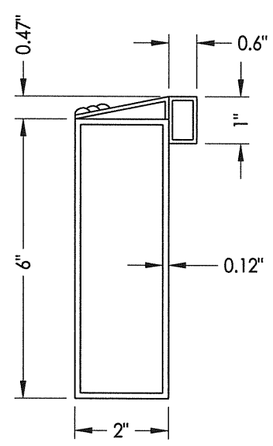

BOTTOM RAIL

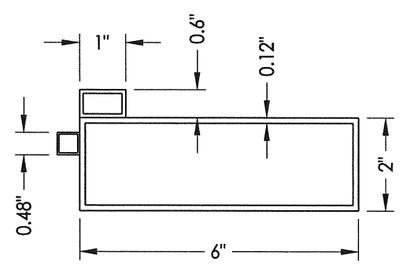

STILES & TOP RAIL

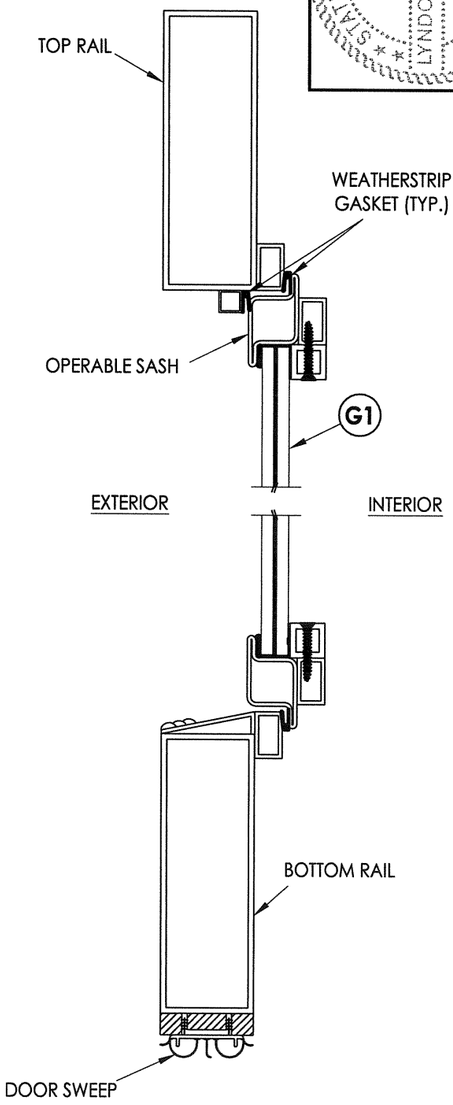

2/2 **VERTICAL CROSS SECTION**

LOCK HARDWARE TABLE

MANUFACTURER	MODEL
HUAN	HANDLE SET w/ DEADBOLT (HN 8669-BA)

STATE OF TEXAS
LYNDON F. SCHMIDT
104123
LICENSED PROFESSIONAL ENGINEER

Documents Prepared By: Lyndon F. Schmidt, P.E. TEXAS P.E. #104123
RW BUILDING CONSULTANTS, INC.
P.O. Box 230 Valrico FL. 33595
Phone No.: 813.659.9197
TEXAS BOARD OF PROFESSIONAL ENGINEERS CERTIFICATE OF REGISTRATION # F-11852

PRODUCT: IRON DOORS UNLIMITED GLAZED IRON DOOR

PART OR ASSEMBLY: DOOR PANEL DETAILS

REVISIONS

NO.	DATE	BY

DATE: 2/02/15
SCALE: N.T.S.
DWG. BY: JK
CHK. BY: LFS
DRAWING NO.: TX-4528
SHEET 2 OF 5

© 2015 R.W. BUILDING CONSULTANTS INC.

R:\Clients\Iron Doors Unlimited PERMANENT\Texas Dept of Ins\TDI - RWBC 15-1117 (X.XX IMP)\Drawings\Current\TX-4528-29.dwg, 1.2

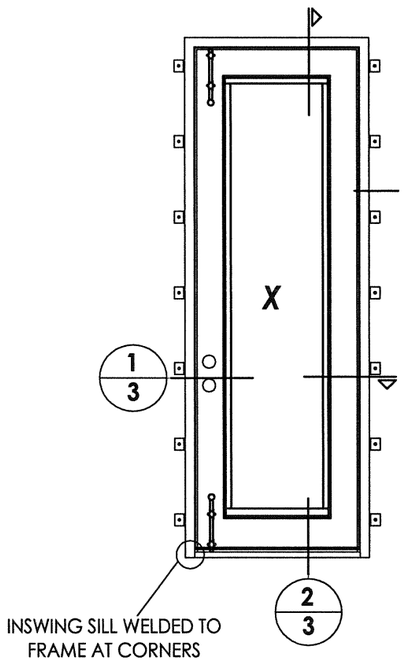

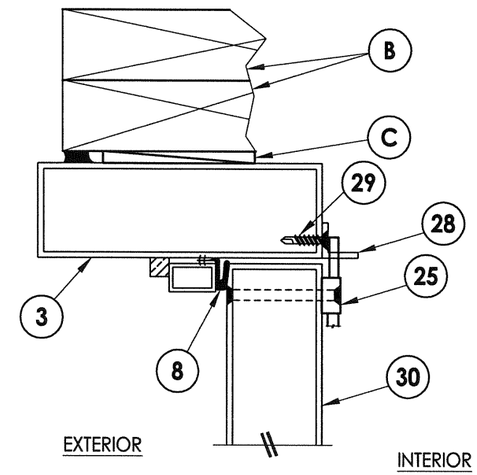

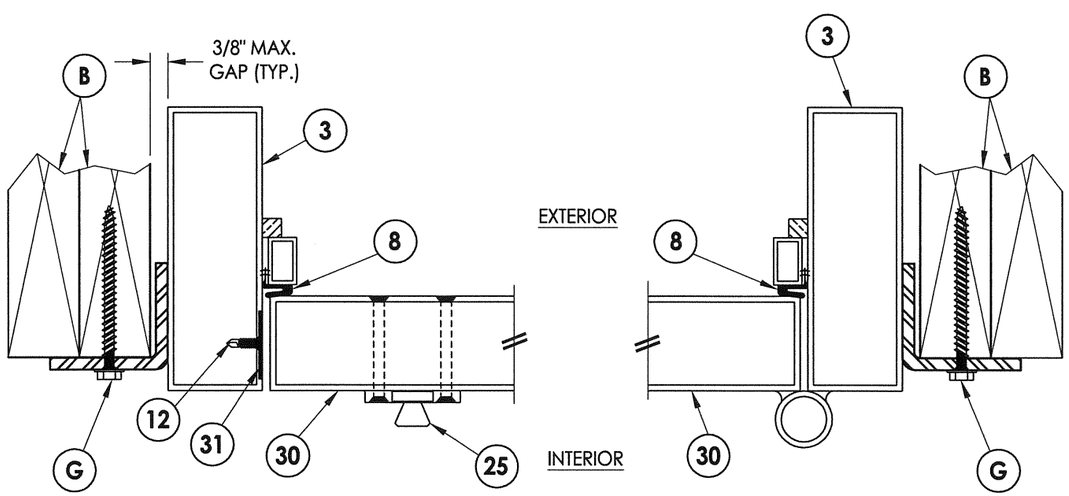

1/3 HORIZONTAL CROSS SECTION

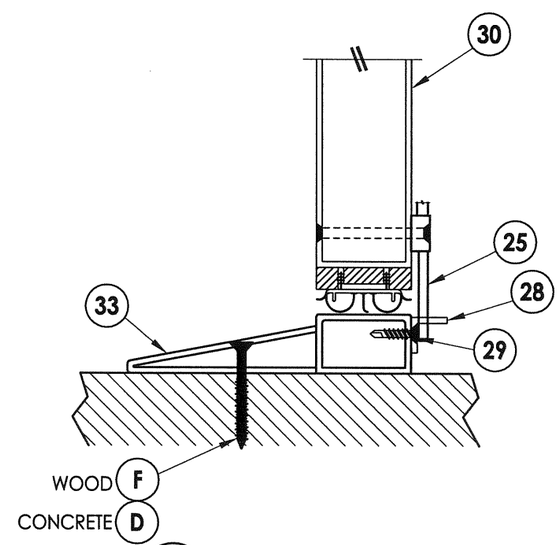

2/3 VERTICAL CROSS SECTION

STATE OF TEXAS
LYNDON F. SCHMIDT
104123
LICENSED
PROFESSIONAL ENGINEER
2-4-15

Documents Prepared By: Lyndon F. Schmidt, P.E.
TEXAS P.E. #104123

RW BUILDING CONSULTANTS, INC.
P.O. Box 230 Valrico FL. 33595
Phone No.: 813.659.9197

TEXAS BOARD OF PROFESSIONAL ENGINEERS
CERTIFICATE OF REGISTRATION # F-11852

PRODUCT: IRON DOORS UNLIMITED GLAZED IRON DOOR

PART OR ASSEMBLY: HORIZONTAL & VERTICAL CROSS SECTIONS

NO.	DATE	REVISIONS	BY

DATE: 2/02/15
SCALE: N.T.S.
DWG. BY: JK
CHK. BY: LFS
DRAWING NO.: TX-4528
SHEET 3 OF 5

© 2015 R.W. BUILDING CONSULTANTS INC.

R:\Clients\Iron Doors Unlimited PERMANENT\Texas Dept of Ins\TDI - RWBC 15-1117 (X,XX IMP)\Drawings\Current\TX-4528-29.dwg, 1.3

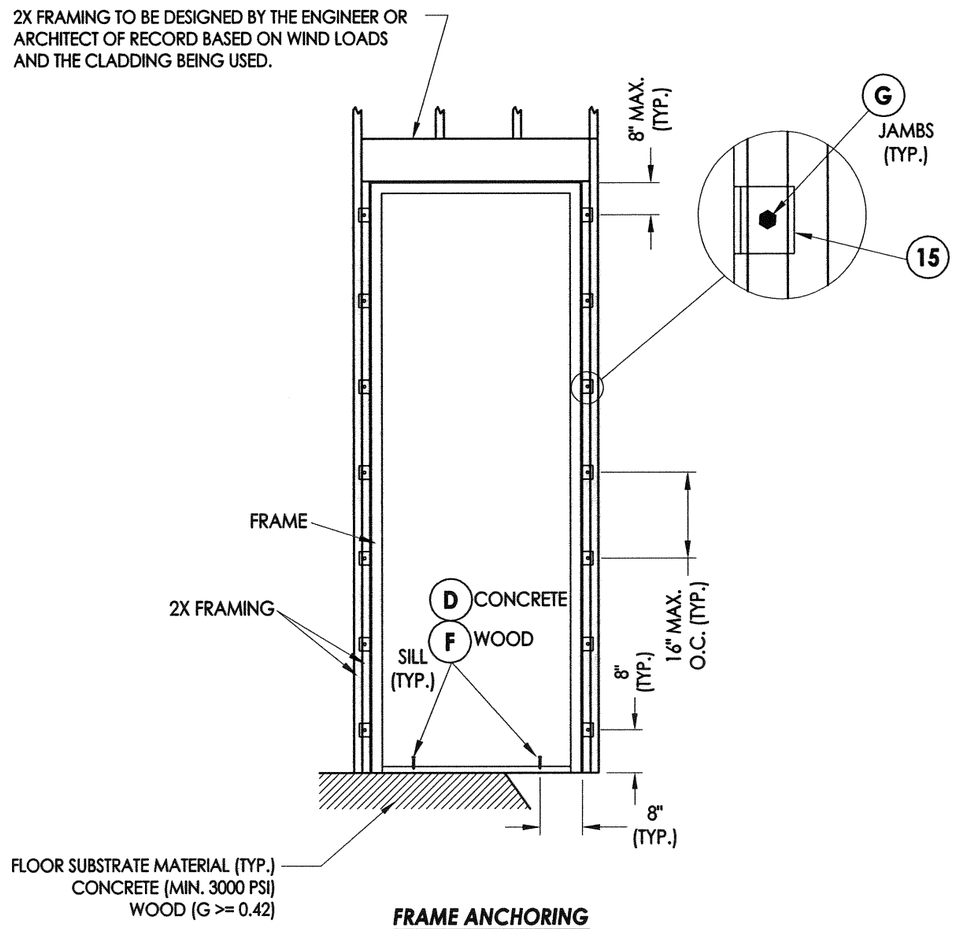

FRAME ANCHORING
X

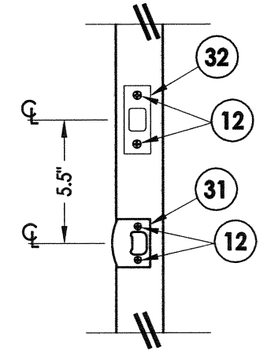

STRIKE DETAILS

CONCRETE ANCHOR NOTES:

1. *Concrete anchor locations at the corners may be adjusted to maintain the min. edge distance to mortar joints.*
2. *Concrete anchor locations noted as "MAX. ON CENTER" must be adjusted to maintain the min. edge distance to mortar joints, additional concrete anchors may be required to ensure the "MAX. ON CENTER" dimension are not exceeded.*
3. *Concrete anchor table:*

ANCHOR TYPE	ANCHOR SIZE	MIN. EMBEDMENT	MIN. CLEARANCE TO MASONRY EDGE	MIN. CLEARANCE TO ADJACENT ANCHOR
ITW BUILDEX TAPCON®	1/4"	1-3/4"	1-1/2"	4"
ELCO ULTRACON®	1/4"	1-3/4"	2-1/2"	4"

STATE OF TEXAS
LYNDON F. SCHMIDT
104123
LICENSED PROFESSIONAL ENGINEER
2.4.15

Documents Prepared By: Lyndon F. Schmidt, P.E.
TEXAS P.E. #104123
RW BUILDING CONSULTANTS, INC.
P.O. Box 230 Valrico FL. 33595
Phone No.: 813.659.9197
TEXAS BOARD OF PROFESSIONAL ENGINEERS
CERTIFICATE OF REGISTRATION # F-11852

PRODUCT: IRON DOORS UNLIMITED GLAZED IRON DOOR

PART OR ASSEMBLY: FRAME ANCHORING

NO.	DATE	REVISIONS	BY

DATE: 2/02/15
SCALE: N.T.S.
DWG. BY: JK
CHK. BY: LFS
DRAWING NO.: TX-4528
SHEET 4 OF 5

© 2015 R.W. BUILDING CONSULTANTS INC.

R:\Clients\Iron Doors Unlimited PERMANENT\Texas Dept of Ins\TDI - RWBC 15-1117 (X.XX IMP)\Drawings\Current\TX-4528-29.dwg, 1.4

BILL OF MATERIALS

ITEM #	DESCRIPTION	MATERIAL
B	2X FRAMING (SG >= 0.42)	WOOD
C	1/4" MAX. SHIM	-
D	1/4" X 2-3/4" ELCO OR ITW CONCRETE SCREW (1.25" MIN. EMBEDMENT)	STEEL
F	#10 X 2-1/2" PFH WOOD SCREW (1.5" MIN. EMBEDMENT)	STEEL
G	5/16" X 3-1/2" HWH LAG SCREW (3" MIN. EMBEDMENT)	STEEL
3	DOOR FRAME	STEEL
8	WEATHERSTRIP GASKET (0.67")	FOAM
12	#8 X 1" PFH SELF-DRILLING SMS	STEEL
15	ANCHORING BRACKET	STEEL
25	12" SURFACE BOLT (IVES SB360) THRU-BOLTED TO DOOR PANEL	-
28	SURFACE BOLT STRIKE PLATE	STEEL
29	#12 X 1" PFH SELF-DRILLING SMS	STEEL
30	DOOR PANEL	-
31	LATCH STRIKE PLATE	STEEL
32	DEADBOLT STRIKE PLATE	STEEL
33	INSWING THRESHOLD	STEEL

NOTE: ALL DOOR FRAME TUBULAR STEEL SHALL BE ASTM A36 STEEL

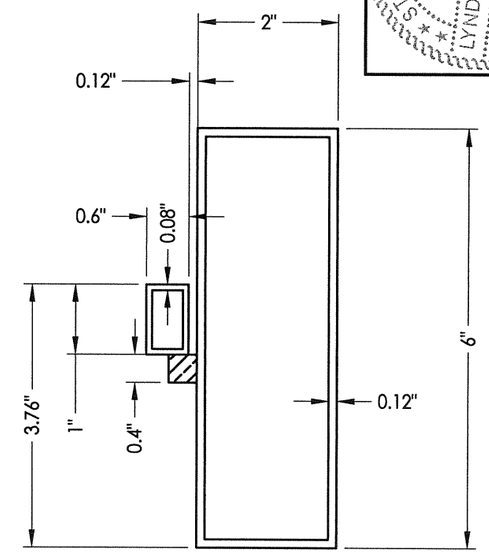

3 DOOR FRAME

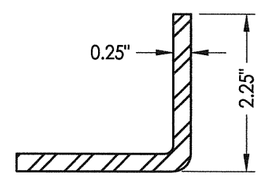

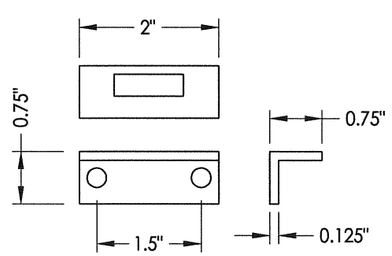

28 SURFACE BOLT STRIKE PLATE

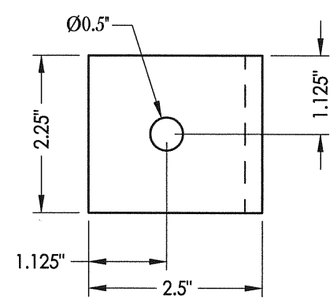

15 ANCHORING BRACKET
Welded all around to frame

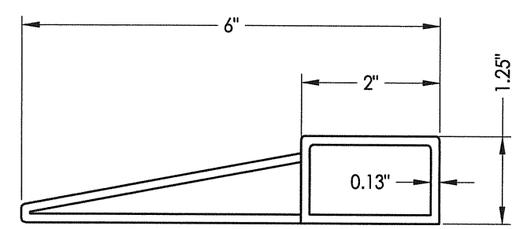

33 INSWING THRESHOLD

STATE OF TEXAS
LYNDON F. SCHMIDT
104123
LICENSED PROFESSIONAL ENGINEER
2-4-15

Documents Prepared By: Lyndon F. Schmidt, P.E.
TEXAS P.E. #104123
RW BUILDING CONSULTANTS, INC.
P.O. Box 230 Valrico FL. 33595
Phone No.: 813.659.9197
TEXAS BOARD OF PROFESSIONAL ENGINEERS
CERTIFICATE OF REGISTRATION # F-11852

PRODUCT: IRON DOORS UNLIMITED GLAZED IRON DOOR

PART OR ASSEMBLY: BILL OF MATERIALS AND COMPONENTS

NO.	DATE	REVISIONS	BY

DATE: 2/02/15
SCALE: N.T.S.
DWG. BY: JK
CHK. BY: LFS
DRAWING NO.: TX-4528
SHEET 5 OF 5

© 2015 R.W. BUILDING CONSULTANTS INC.

R:\Clients\Iron Doors Unlimited PERMANENT\Texas Dept of Ins\TDI - RWBC 15-1117 (XXX IMP)\Drawings\Current\TX-4528-29.dwg, 1.5