# *DESIGN PRO / SMOOTH PRO FULL LITE IMPACT APPROVED*

GENERAL NOTES:

1. THE PRODUCT SHOWN HEREIN IS DESIGNED AND MANUFACTURED TO COMPLY WITH THE 2018 INTERNATIONAL RESIDENTIAL CODE (IRC), 2018 INTERNATIONAL BUILDING CODE (IBC), AND TEXAS REVISIONS, AND HAS BEEN EVALUATED ACCORDING TO THE FOLLOWING:
   - ASTM E283-04
   - ASTM E283-04
   - ASTM E330-02
   - ASTM E1886-05
   - ASTM E1996-06
   - AAMA 1304-02

2. ADEQUACY OF THE EXISTING STRUCTURAL CONCRETE/MASONRY OR 2X FRAMING AS A MAIN WIND FORCE RESISTING SYSTEM CAPABLE OF WITHSTANDING AND TRANSFERRING APPLIED PRODUCT LOADS TO THE FOUNDATION IS THE RESPONSIBILITY OF THE ENGINEER OR ARCHITECT OF RECORD FOR THE PROJECT OF INSTALLATION.

3. THE INSTALLATION DETAILS DESCRIBED HEREIN ARE GENERIC AND MAY NOT REFLECT ACTUAL CONDITIONS FOR A SPECIFIC SITE. IF SITE CONDITIONS CAUSE INSTALLATION TO DEVIATE FROM THE REQUIREMENTS DETAILED HEREIN, A LICENSED ENGINEER OR ARCHITECT SHALL PREPARE SITE SPECIFIC DOCUMENTS FOR USE WITH THIS DOCUMENT.

4. APPROVED IMPACT PROTECTIVE SYSTEM **IS NOT REQUIRED** ON THIS PRODUCT IN AREAS REQUIRING IMPACT RESISTANCE FOR WIND ZONE 3 OR LESS.

5. GLASS MEETS THE REQUIREMENTS OF ASTM E 1300 GLASS CHARTS. SEE SHEET 6 FOR GLAZING DETAILS.

6. FULL LITE APPROVAL COVERS USE OF FRACTIONAL GLAZING, INCLUDING INTERNAL GRID, BLINDS BETWEEN GLASS, DECORATIVE AND EXTERNAL WROUGHT IRON. RADIUS (SHAPED) LITES ARE QUALIFIED FOR 6'-8" DOORS AT DP +/-50 PSF ONLY.

7. NOTE: AFCO H-497 SILL MEETS WATER INFILTRATION AT WATER TEST PRESSURE (WTP) OF 9.0 PSF. REMAINING SILLS NOT RATED FOR WATER INFILTRATION. IF AUTHORITY HAVING JURISDICTION REQUIRES THAT PRODUCT MEETS THIS REQUIREMENT, PRODUCT SHALL BE USED WHEN INSTALLED AT LOCATION PROTECTED BY OVERHANG SUCH THAT OVERHANG (OH) RATIO = OH LENGTH ÷ OH HEIGHT IS ≥ 1.0

**TABLE OF CONTENTS**


| SHEET | REVISION | SHEET DESCRIPTION |
|---|---|---|
| 1 | A | TYPICAL ELEVATIONS, DESIGN PRESSURES, AND GENERAL NOTES |
| 2 | A | TYPICAL ANCHOR LAYOUTS AND NOTES |
| 3 | - | OPTIONAL 2X BUCK ANCHORING DETAILS |
| 4 | - | VERTICAL ASSEMBLIES |
| 5 | A | HORIZONTAL ASSEMBLIES |
| 6 | A | GLAZING DETAILS |
| 7 | - | WOOD SUBSTRATES |
| 8 | - | CONCRETE SUBSTRATES |
| 9 | A | COMPONENTS & BILL OF MATERIALS |


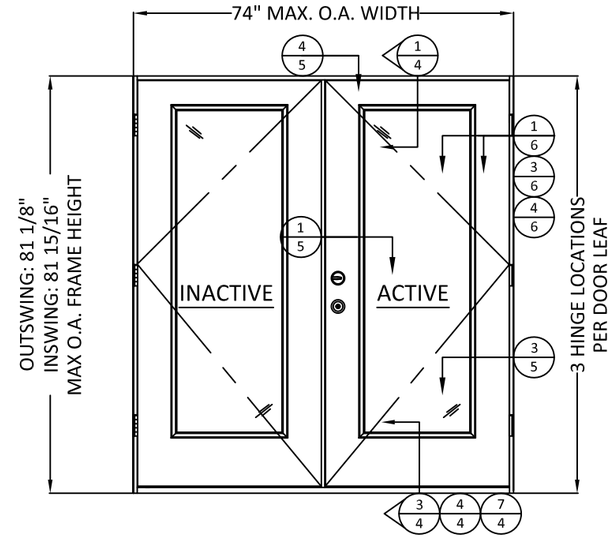


1/1 **TYP. ELEVATION 1**
6'-8" DOOR HEIGHT

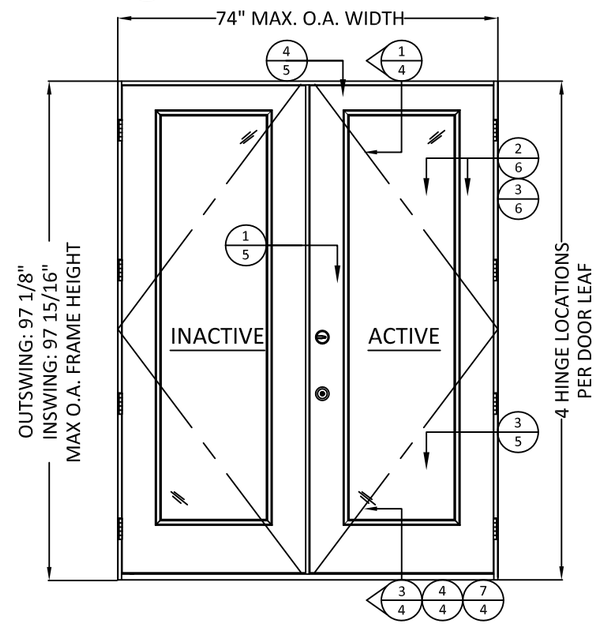


2/1 **TYP. ELEVATION 2**
8'-0" DOOR HEIGHT

NOTE:
INACTIVE AND ACTIVE DOOR PANEL ORIENTATION IS INTERCHANGEABLE.

| CONFIGURATION | MAX. OVERALL NOMINAL SIZE | | DESIGN PRESSURE (PSF) | | | | MISSILE IMPACT RATING |
|---|---|---|---|---|---|---|---|
| | WIDTH | HEIGHT | INSWING | | OUTSWING | | |
| | | | POS. | NEG. | POS. | NEG. | |
| XX | 6'-0" | 6'-8" | 50* | 50 | 50* | 50 | LMI & SMI |
| XX RADIUS | 6'-0" | 6'-8" | 50* | 50 | 50* | 50 | LMI & SMI |
| XX | 6'-0" | 8'-0" | 50* | 50 | 50* | 50 | LMI & SMI |

*SEE GENERAL NOTE 7, SHEET 1, FOR WATER INFILTRATION APPROVED SILLS.

PREPARED BY:

TITLE: *DESIGN PRO/SMOOTH PRO FULL LITE IMPACT APPROVED*
TYPICAL ELEVATIONS, DESIGN PRESSURES, AND GENERAL NOTES


3737 LAKEPORT BLVD.,
KLAMATH FALLS, OR 97601
PH: (541)882-3451
FAX: (541)850-2609


| REMARKS | BY | DATE |
|---|---|---|
| | | |
| | | |
| | | |
| | | |


THIS DOCUMENT IS THE PROPERTY OF BUILDING DROPS, INC. AND SHALL NOT BE REPRODUCED IN WHOLE OR PART WITHOUT WRITTEN CONSENT OF BUILDING DROPS, INC. ALTERATIONS, ADDITIONS, HIGHLIGHTING, OR OTHER MARKINGS TO THIS DOCUMENT ARE NOT PERMITTED AND INVALIDATE OUR CERTIFICATION.


STATE OF TEXAS
JOSEPH A. REED
100777
LICENSED
PROFESSIONAL ENGINEER

2021.11.16 14:33:33 -05'00'


JOSEPH A. REED, P.E.
Texas No. 100777
5 Leigh Drive
York, PA. 17406
(717) 846-1200


DATE: 10.06.2021
DWG. BY: GL
CHK. BY: SS
SCALE: NTS
DWG. #: A010927
SHEET: 1 OF 9

INSTALLATION NOTES:

1. ONE (1) INSTALLATION ANCHOR IS REQUIRED AT EACH ANCHOR LOCATION SHOWN.
2. SHIM AS REQUIRED AT EACH INSTALLATION ANCHOR WITH LOAD BEARING SHIM(S). MAXIMUM ALLOWABLE SHIM STACK TO BE 1/4 INCH. SHIM WHERE SPACE OF 1/16 INCH OR GREATER OCCURS. SHIM(S) SHALL BE CONSTRUCTED OF HIGH DENSITY PLASTIC OR BETTER.
3. MINIMUM EMBEDMENT AND EDGE DISTANCE EXCLUDE WALL FINISHES, INCLUDING BUT NOT LIMITED TO STUCCO, FOAM, BRICK VENEER, AND SIDING.
4. INSTALLATION ANCHORS AND ASSOCIATED HARDWARE MUST BE MADE OF CORROSION RESISTANT MATERIAL OR HAVE A CORROSION RESISTANT COATING, AND SHALL BE INSTALLED IN ACCORDANCE WITH ANCHOR MANUFACTURER'S INSTALLATION INSTRUCTIONS.
5. FOR HOLLOW BLOCK AND GROUT FILLED BLOCK, DO NOT INSTALL INSTALLATION ANCHORS INTO MORTAR JOINTS. EDGE DISTANCE IS MEASURED FROM FREE EDGE OF BLOCK OR EDGE OF MORTAR JOINT INTO FACE SHELL OF BLOCK.
6. FOR 2X STUD CONSTRUCTION, ANCHORING OF THESE PRODUCTS SHALL BE THE SAME AS FOR 2X BUCK CONCRETE/MASONRY CONSTRUCTION.
7. INSTALLATION ANCHOR CAPACITIES FOR PRODUCTS HEREIN ARE BASED ON SUBSTRATE MATERIALS WITH THE FOLLOWING PROPERTIES:
   A. WOOD - MINIMUM SPECIFIC GRAVITY OF 0.42.
   B. CONCRETE -MINIMUM COMPRESSIVE STRENGTH OF 3000 PSI.
   C. GROUT-FILLED CMU- UNIT STRENGTH CONFORMS TO ASTM C-90 WITH MINIMUM COMPRESSIVE STRENGTH OF 2000 PSI AND GROUT CONFORMS TO ASTM C 476, MINIMUM GROUT COMPRESSIVE STRENGTH OF 2000 PSI.
   D. HOLLOW BLOCK CMU - UNIT STRENGTH CONFORMS TO ASTM C-90 WITH MINIMUM COMPRESSIVE STRENGTH OF 2000 PSI.
8. SEE SHEETS 7 AND 8 FOR MORE DETAILS OF THE INSTALLATION REQUIREMENTS, INCLUDING ANCHOR LOCATIONS, EDGE DISTANCES, EMBEDMENTS, AND SHIM SPACING.
9. OPTIONALLY, ANCHORS CAN BE PLACED IN NARROW SECTION OF HEAD OR JAMB AS LONG AS MINIMUM EMBEDMENT AND EDGE DISTANCE ARE ACHIEVED.

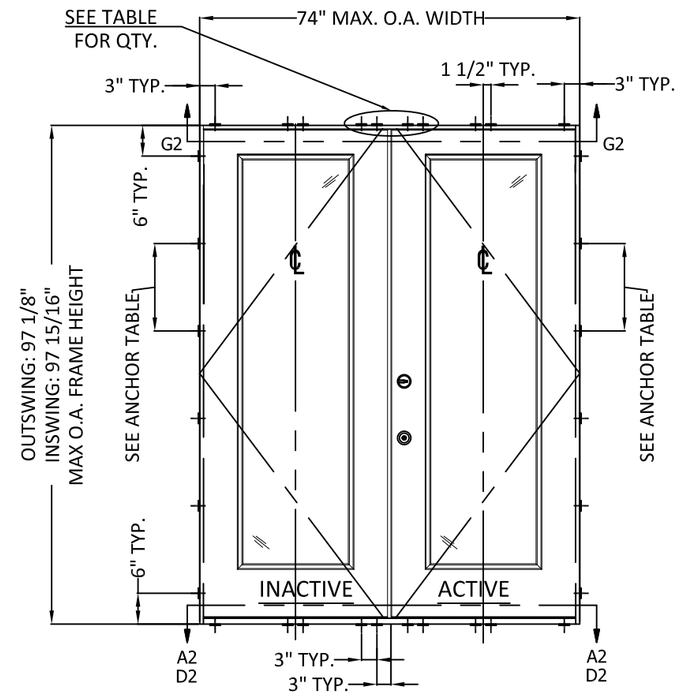


1/2 TYP. ANCHOR LAYOUT

6'-8" OR 8'-0" DOOR HEIGHT

NOTE:
INACTIVE AND ACTIVE DOOR PANEL ORIENTATION IS INTERCHANGEABLE.

**ANCHOR TABLE**

| ANCHOR TYPE | ANCHOR SIZE | SUBSTRATE | MIN. EMBEDMENT | MIN. EDGE DISTANCE | 6'8" DOORS | | 8'0" DOORS | |
|---|---|---|---|---|---|---|---|---|
| | | | | | MAX. O.C. SPACING AT JAMBS | # OF ANCHORS AT HEAD/SILL CLUSTERS | MAX. O.C. SPACING AT JAMBS | # OF ANCHORS AT HEAD/SILL CLUSTERS |
| WOOD SCREW | #10 | 2X WOOD BUCK OR FRAMING | 1-1/2" | 3/4" | 17-1/2" | 4 | 17-1/4" | 4 |
| ITW TAPCON | 3/16" | CONCRETE/CMU | 1-1/4" | 2-1/2" | 17-1/2" | 4 | 17-1/4" | 4 |
| ELCO ULTRACON | 1/4" | CONCRETE/CMU | 1-3/8" - CONC.<br>1-1/4" - CMU | 1" | 17-1/2" | 4 | 17-1/4" | 4 |
| ITW TAPCON | 3/16" | CONCRETE/CMU | 1-1/4" | 1-1/8"- CONC.<br>2"- CMU | 11-5/8" | 8 | 14-3/8" | 6 |

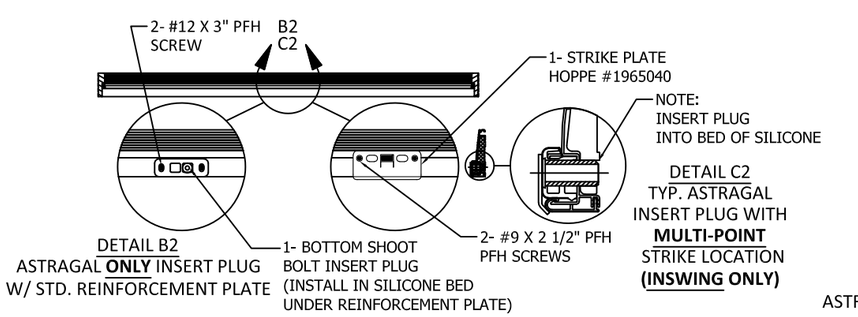


A/2 INSWING SILL SECTION VIEW

SEE DETAIL B2 OR C2 ABOVE

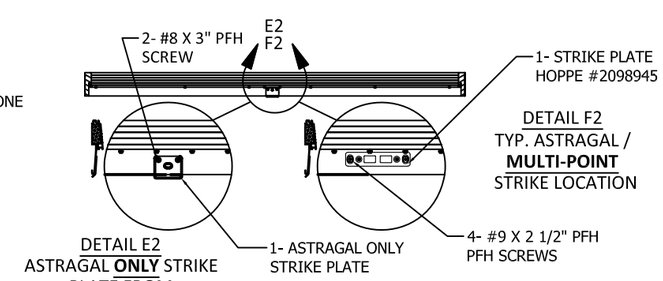


D/2 OUTSWING SILL SECTION VIEW

SEE DETAIL E2 OR F2 ABOVE

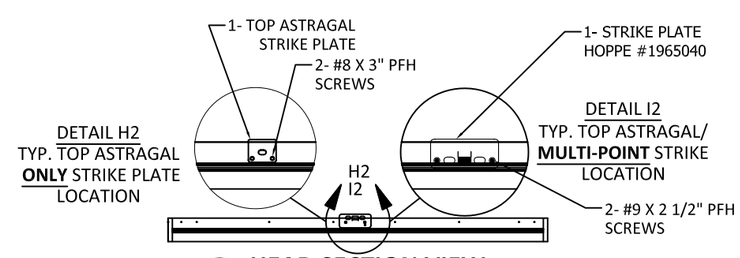


G/2 HEAD SECTION VIEW

INSWING SHOWN OUTSWING SIMILAR

PREPARED BY:

TITLE: *DESIGN PRO/SMOOTH PRO FULL LITE IMPACT APPROVED*

TYPICAL ANCHOR LAYOUTS AND NOTES


3737 LAKEPORT BLVD.,
KLAMATH FALLS, OR 97601
PH: (541)882-3451
FAX: (541)850-2609


| REMARKS | BY | DATE |
|---|---|---|
| | | |
| | | |
| | | |
| | | |


THIS DOCUMENT IS THE PROPERTY OF BUILDING DROPS, INC. AND SHALL NOT BE REPRODUCED IN WHOLE OR PART WITHOUT WRITTEN CONSENT OF BUILDING DROPS, INC. ALTERATIONS, ADDITIONS, HIGHLIGHTING, OR OTHER MARKINGS TO THIS DOCUMENT ARE NOT PERMITTED AND INVALIDATE OUR CERTIFICATION.


STATE OF TEXAS
JOSEPH A. REED
100777
LICENSED
PROFESSIONAL ENGINEER

2021.11.16 14:33:33 -05'00'


JOSEPH A. REED, P.E.
Texas No. 100777
5 Leigh Drive
York, PA. 17406
(717) 846-1200


DATE: 10.06.2021

DWG. BY: GL

CHK. BY: SS

SCALE: NTS

DWG. #: A010927

SHEET: 2 OF 9

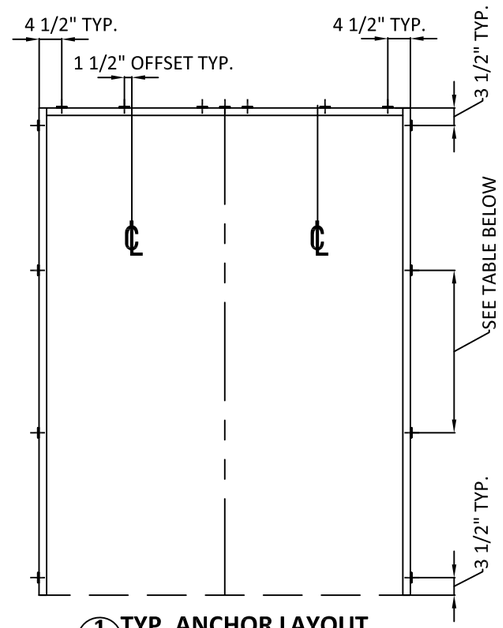


**1/3 TYP. ANCHOR LAYOUT**
OPTIONAL 2X BUCK IN CONCRETE/MASONRY

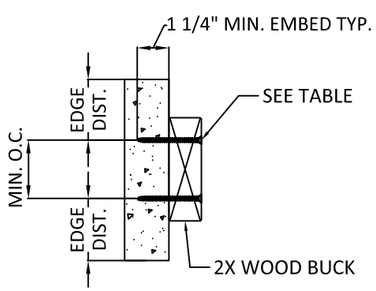


**3/3 2X WOOD BUCK INSTALL.**
CROSS SECTION

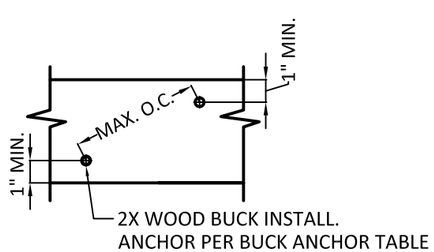


**4/3 2X WOOD BUCK INSTALL.**
SIDE VIEW

**2X BUCK ANCHOR TABLE**

| ANCHOR TYPE | ANCHOR SIZE | SUBSTRATE | MIN. EMBEDMENT | MIN. EDGE DIST. TO SUBSTRATE | MIN. CENTER TO CENTER DISTANCE | 6'8" DOORS | 8'0" DOORS |
|---|---|---|---|---|---|---|---|
| | | | | | | MAX. O.C. SPACING AT JAMBS | MAX. O.C. SPACING AT JAMBS |
| ITW TAPCON | 1/4" | CONCRETE/CMU | 1-1/4" | 2-1/2" | 4" | 25" | 30-1/4" |
| ELCO ULTRACON | 1/4" | CONCRETE/CMU | 1-3/8" - CONC.<br>1-1/4" - CMU | 1" | 4" | 25" | 30-1/4" |

NOTES:

1. 2X BUCK IS NOT FOR INSTALLATION AT SILL. THRESHOLD SHALL BE FASTENED IN ACCORDANCE WITH ANCHOR LOCATIONS SHOWN ON SHEET 2.
2. ANCHORS MAY BE STAGGERED AS SHOWN IN DETAIL 4/3.

PREPARED BY:

TITLE:
*DESIGN PRO/SMOOTH PRO FULL LITE*
*IMPACT APPROVED*
OPTIONAL 2X BUCK
ANCHORING DETAILS

3737 LAKEPORT BLVD.,
KLAMATH FALLS, OR 97601
PH: (541)882-3451
FAX: (541)850-2609

| REMARKS | BY | DATE |
|---|---|---|
| | | |
| | | |
| | | |
| | | |

THIS DOCUMENT IS THE PROPERTY OF BUILDING DROPS, INC. AND SHALL NOT BE REPRODUCED IN WHOLE OR PART WITHOUT WRITTEN CONSENT OF BUILDING DROPS, INC. ALTERATIONS, ADDITIONS, HIGHLIGHTING, OR OTHER MARKINGS TO THIS DOCUMENT ARE NOT PERMITTED AND INVALIDATE OUR CERTIFICATION.

STATE OF TEXAS
JOSEPH A. REED
100777
LICENSED
PROFESSIONAL ENGINEER

2021.11.16 14:33:33 -05'00'
JOSEPH A. REED, P.E.
Texas No. 100777
5 Leigh Drive
York, PA. 17406
(717) 846-1200

DATE: 10.06.2021
DWG. BY: GL
CHK. BY: SS
SCALE: NTS
DWG. #: A010927
SHEET: 3 OF 9

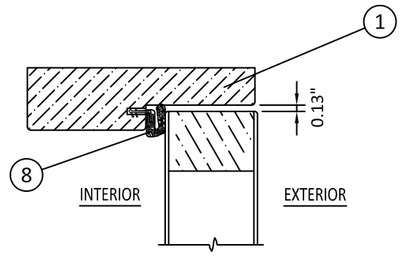


1/4 **OPERABLE HEAD**

**OUTSWING SHOWN - INSWING SIMILAR**

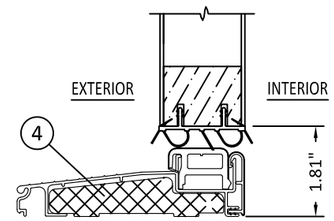


3/4 **OPERABLE SILL**

**INSWING**

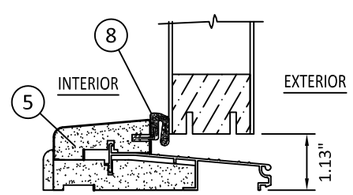


4/4 **OPERABLE SILL**

**OUTSWING**

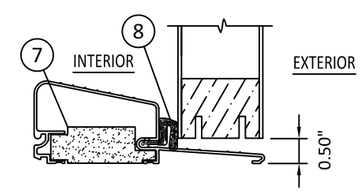


7/4 **OPERABLE SILL**

**OUTSWING**

PREPARED BY:

TITLE:

*DESIGN PRO/SMOOTH PRO FULL LITE*
*IMPACT APPROVED*

VERTICAL ASSEMBLIES

3737 LAKEPORT BLVD.,
KLAMATH FALLS, OR 97601
PH: (541)882-3451
FAX: (541)850-2609

| REMARKS | BY | DATE |
|---|---|---|
| | | |
| | | |
| | | |
| | | |

THIS DOCUMENT IS THE PROPERTY OF BUILDING DROPS, INC. AND SHALL NOT BE REPRODUCED IN WHOLE OR PART WITHOUT WRITTEN CONSENT OF BUILDING DROPS, INC. ALTERATIONS, ADDITIONS, HIGHLIGHTING, OR OTHER MARKINGS TO THIS DOCUMENT ARE NOT PERMITTED AND INVALIDATE OUR CERTIFICATION.

STATE OF TEXAS
JOSEPH A. REED
100777
LICENSED
PROFESSIONAL ENGINEER

2021.11.16 14:33:33 -05'00'

**JOSEPH A. REED, P.E.**
**Texas No. 100777**
**5 Leigh Drive**
**York, PA. 17406**
**(717) 846-1200**

DATE: 10.06.2021

DWG. BY: GL

CHK. BY: SS

SCALE: NTS

DWG. #: A010927

SHEET: OF 9

4

| HINGE SCHEDULE | |
|---|---|
| DOOR HEIGHT | QUANTITY |
| 6'-8" | 3 |
| 8'-0" | 4 |

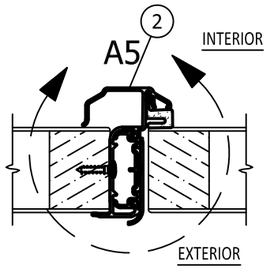


## 1/5 MEETING STILE

**OUTSWING SHOWN - INSWING SIMILAR**

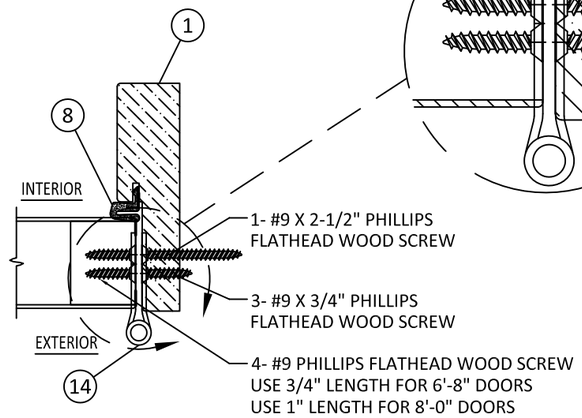


HINGE DETAIL AT JAMB:
PLACE #9 X 2-1/2" PFH SCREW NEXT TO WEATHERSTRIP

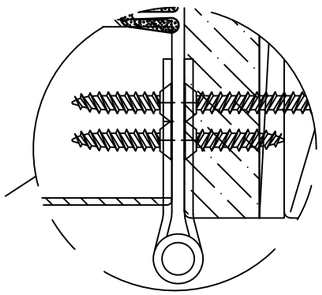

## 3/5 HINGE JAMB

**OUTSWING SHOWN - INSWING SIMILAR**

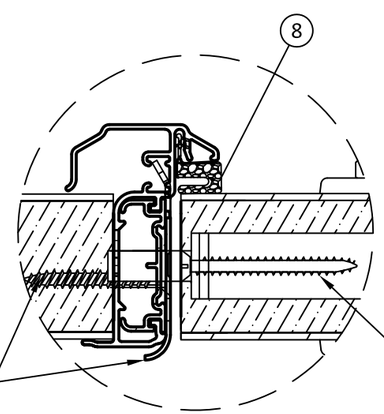


3 - #8 X 2" PFH
1 - MULTI-PT LOCK STRIKE PLATE

13 - #8 X 1 3/8" PFH
(6-8 UNITS)
15 - #8 X 1 3/8" PFH
(8-0 UNITS)
COMES WITH HARDWARE

**DETAIL A5**
HOPPE MULTI-PT LOCK
FASTENING

4 - #8 X 1 3/8" PFH
1 - REINFORCEMENT PLATE
HOPPE #2512296

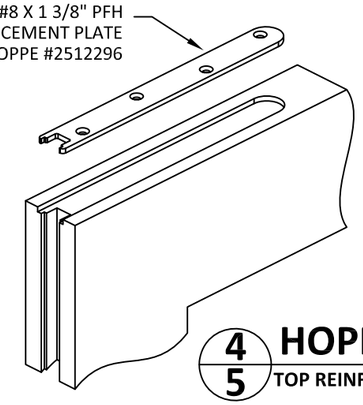

## 4/5 HOPPE MULTI-POINT LOCK

**TOP REINFORCEMENT PLATE - ACTIVE PANEL ONLY**

PREPARED BY:

TITLE:
*DESIGN PRO/SMOOTH PRO FULL LITE*
*IMPACT APPROVED*
WOOD SUBSTRATES


3737 LAKEPORT BLVD.,
KLAMATH FALLS, OR 97601
PH: (541)882-3451
FAX: (541)850-2609


| REMARKS | BY | DATE |
|---|---|---|
| | | |
| | | |
| | | |
| | | |


THIS DOCUMENT IS THE PROPERTY OF BUILDING DROPS, INC. AND SHALL NOT BE REPRODUCED IN WHOLE OR PART WITHOUT WRITTEN CONSENT OF BUILDING DROPS, INC. ALTERATIONS, ADDITIONS, HIGHLIGHTING, OR OTHER MARKINGS TO THIS DOCUMENT ARE NOT PERMITTED AND INVALIDATE OUR CERTIFICATION.


STATE OF TEXAS
JOSEPH A. REED
100777
LICENSED
PROFESSIONAL ENGINEER

2021.11.16 14:33:33 -05'00'


**JOSEPH A. REED, P.E.**
**Texas No. 100777**
**5 Leigh Drive**
**York, PA. 17406**
**(717) 846-1200**


DATE: 10.06.2021
DWG. BY: GL
CHK. BY: SS
SCALE: NTS
DWG. #: A010927
SHEET: 5 OF 9

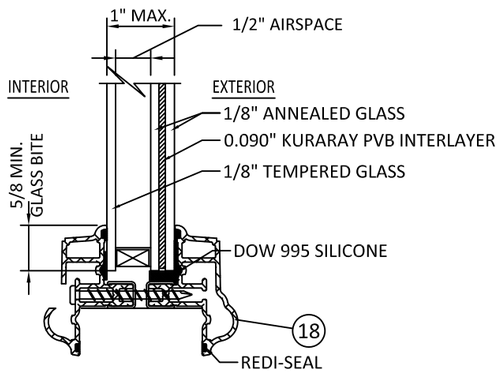


## 1/6 6'-8" GLAZING DETAIL

**20 1/2" MAX. D.L.O. WIDTH**
**62 1/2" MAX. D.L.O. HEIGHT**

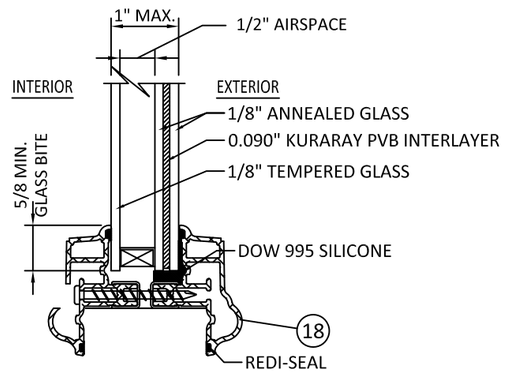


## 2/6 8'-0" GLAZING DETAIL

**20 1/2" MAX. D.L.O. WIDTH**
**78 1/2" MAX. D.L.O. HEIGHT**

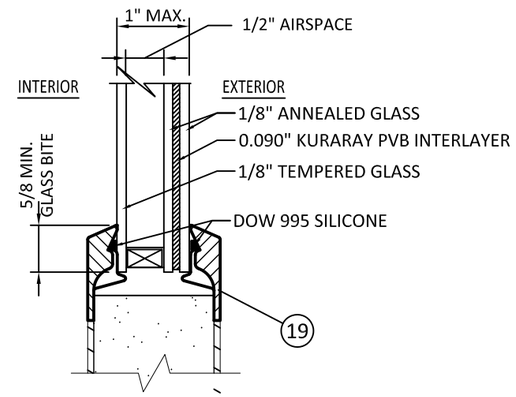


## 3/6 FLUSH GLAZE DETAIL

**23 7/8" MAX. D.L.O. WIDTH**
**78 7/8" MAX. D.L.O. HEIGHT**

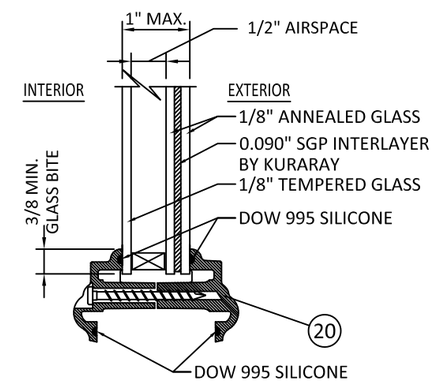


## 4/6 GLAZING DETAIL

**FOR OVAL, SUNBURST, AND ROUND TOPS IN 6'8" UNITS AT DP+/- 50 PSF ONLY**

NOTE:
FRACTIONAL GLAZING, INCLUDING INTERNAL GRID, BLINDS BETWEEN GLASS, DECORATIVE, EXTERNAL WROUGHT IRON AND RADIUS (SHAPED) LITES ARE APPROVED IN ALL GLAZING DETAILS SHOWN ABOVE.

PREPARED BY:

TITLE:
*DESIGN PRO/SMOOTH PRO FULL LITE*
*IMPACT APPROVED*
HORIZONTAL ASSEMBLIES,
GLAZING DETAIL

3737 LAKEPORT BLVD.,
KLAMATH FALLS, OR 97601
PH: (541)882-3451
FAX: (541)850-2609

| REMARKS | BY | DATE |
|---|---|---|
| | | |
| | | |
| | | |
| | | |

THIS DOCUMENT IS THE PROPERTY OF BUILDING DROPS, INC. AND SHALL NOT BE REPRODUCED IN WHOLE OR PART WITHOUT WRITTEN CONSENT OF BUILDING DROPS, INC. ALTERATIONS, ADDITIONS, HIGHLIGHTING, OR OTHER MARKINGS TO THIS DOCUMENT ARE NOT PERMITTED AND INVALIDATE OUR CERTIFICATION.

STATE OF TEXAS
JOSEPH A. REED
100777
LICENSED
PROFESSIONAL ENGINEER

2021.11.16 14:33:33 -05'00'

**JOSEPH A. REED, P.E.**
**Texas No. 100777**
**5 Leigh Drive**
**York, PA. 17406**
**(717) 846-1200**

DATE: 10.06.2021
DWG. BY: GL
CHK. BY: SS
SCALE: NTS
DWG. #: A010927
SHEET: OF 9
6

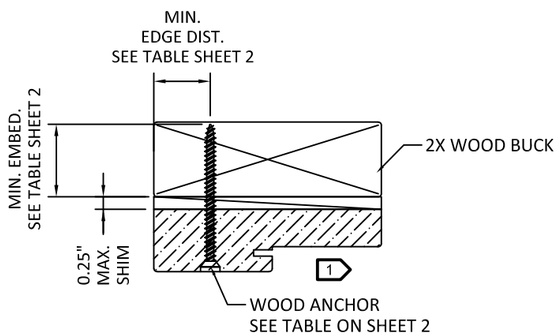


## 1/7 HEAD (TYPICAL)

**OUTSWING SHOWN - INSWING SIMILAR**

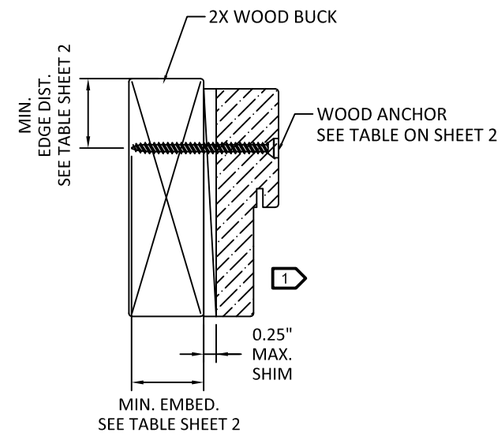


## 2/7 JAMB (TYPICAL)

**OUTSWING SHOWN - INSWING SIMILAR**

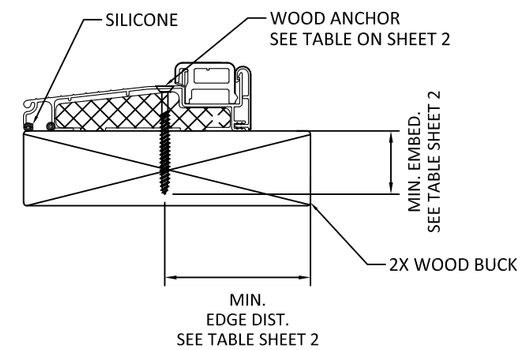


## 3/7 OPERABLE SILL

**INSWING**

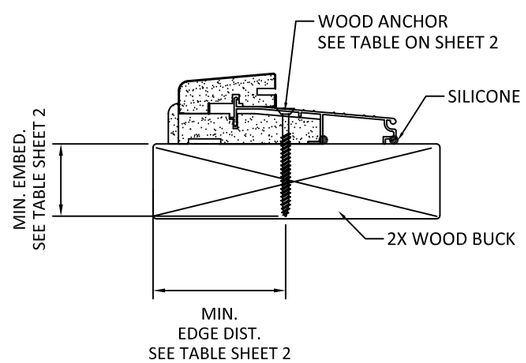


## 4/7 OPERABLE SILL

**OUTSWING**

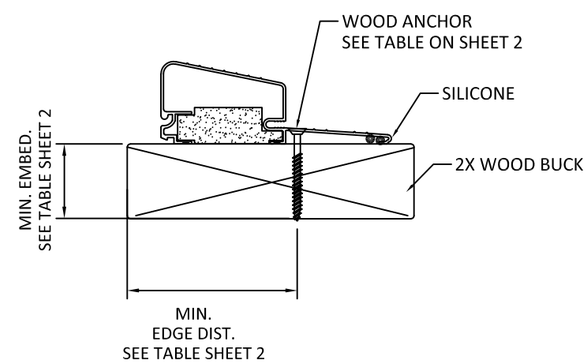


## 7/7 OPERABLE SILL

**HIGH BUMP OUTSWING**

1 OPTIONALLY, ANCHOR CAN BE PLACED IN NARROW SECTION OF HEAD OR JAMB AS LONG AS MINIMUM EMBEDMENT AND EDGE DISTANCE ARE ACHIEVED.

PREPARED BY:

TITLE: *DESIGN PRO/SMOOTH PRO FULL LITE IMPACT APPROVED*

WOOD SUBSTRATES

3737 LAKEPORT BLVD.,
KLAMATH FALLS, OR 97601
PH: (541)882-3451
FAX: (541)850-2609

| REMARKS | BY | DATE |
|---|---|---|
| | | |
| | | |
| | | |
| | | |

THIS DOCUMENT IS THE PROPERTY OF BUILDING DROPS, INC. AND SHALL NOT BE REPRODUCED IN WHOLE OR PART WITHOUT WRITTEN CONSENT OF BUILDING DROPS, INC. ALTERATIONS, ADDITIONS, HIGHLIGHTING, OR OTHER MARKINGS TO THIS DOCUMENT ARE NOT PERMITTED AND INVALIDATE OUR CERTIFICATION.

STATE OF TEXAS
JOSEPH A. REED
100777
LICENSED
PROFESSIONAL ENGINEER

2021.11.16 14:33:33 -05'00'

**JOSEPH A. REED, P.E.**
**Texas No. 100777**
**5 Leigh Drive**
**York, PA. 17406**
**(717) 846-1200**

DATE: 10.06.2021

DWG. BY: GL

CHK. BY: SS

SCALE: NTS

DWG. #: A010927

SHEET: 7 OF 9

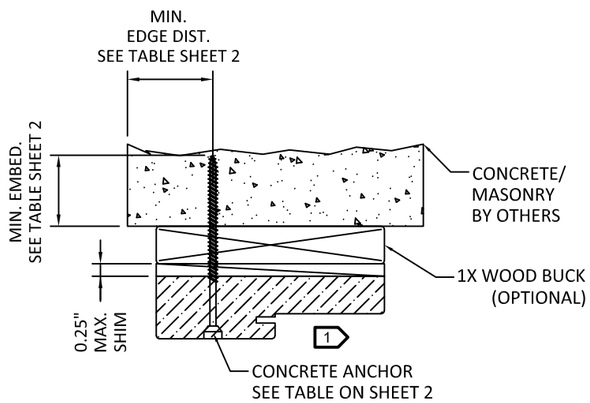


## 1/8 HEAD (TYPICAL)

**OUTSWING SHOWN - INSWING SIMILAR**

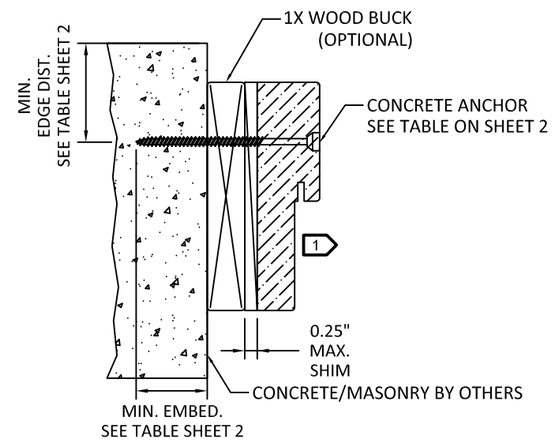


## 2/8 JAMB (TYPICAL)

**OUTSWING SHOWN - INSWING SIMILAR**

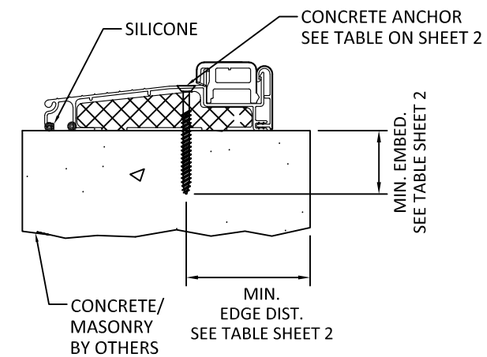


## 3/8 OPERABLE SILL

**INSWING**

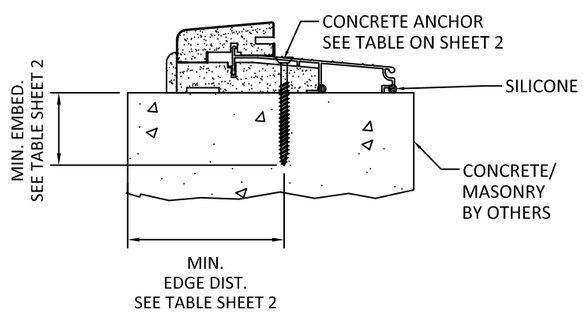


## 4/8 OPERABLE SILL

**OUTSWING**

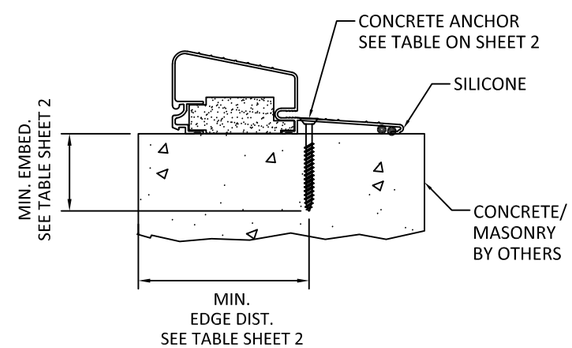


## 7/8 OPERABLE SILL

**HIGH BUMP OUTSWING**

1 OPTIONALLY, ANCHOR CAN BE PLACED IN NARROW SECTION OF HEAD OR JAMB AS LONG AS MINIMUM EMBEDMENT AND EDGE DISTANCE ARE ACHIEVED.

PREPARED BY:

TITLE: *DESIGN PRO/SMOOTH PRO FULL LITE IMPACT APPROVED*

CONCRETE SUBSTRATES

3737 LAKEPORT BLVD.,
KLAMATH FALLS, OR 97601
PH: (541)882-3451
FAX: (541)850-2609

| REMARKS | BY | DATE |
|---|---|---|
| | | |
| | | |
| | | |
| | | |

THIS DOCUMENT IS THE PROPERTY OF BUILDING DROPS, INC. AND SHALL NOT BE REPRODUCED IN WHOLE OR PART WITHOUT WRITTEN CONSENT OF BUILDING DROPS, INC. ALTERATIONS, ADDITIONS, HIGHLIGHTING, OR OTHER MARKINGS TO THIS DOCUMENT ARE NOT PERMITTED AND INVALIDATE OUR CERTIFICATION.

STATE OF TEXAS
JOSEPH A. REED
100777
LICENSED
PROFESSIONAL ENGINEER

2021.11.16 14:33:33 -05'00'

**JOSEPH A. REED, P.E.**
**Texas No. 100777**
**5 Leigh Drive**
**York, PA. 17406**
**(717) 846-1200**

DATE: 10.06.2021

DWG. BY: GL

CHK. BY: SS

SCALE: NTS

DWG. #: A010927

SHEET: 8 OF 9

| BILL OF MATERIALS | | |
|---|---|---|
| ITEM# | DESCRIPTION | MATERIAL |
| 1 | FRAME HEAD/JAMBS | FINGER-JOINTED PINE |
| | | SOLID PINE |
| | | LAMINATED VENEER LUMBER |
| | | COMPOSITE |
| 2 | ASTRAGAL, ENDURA ULTIMATE HURRICANE (SEE SHEET 2 FOR HARDWARE AND FASTENING DETAILS) | 6063-T6 ALUMINUM |
| 3 | *(NOT USED)* | - |
| 4 | THRESHOLD | - |
| 5 | THRESHOLD | - |
| 6 | *(NOT USED)* | - |
| 7 | THRESHOLD | - |
| 8 | WEATHERSTRIP | URETHANE FOAM & POLYETHYLENE |
| 9 | NON-COMPRESSION SHIM (0.25" MAX. THK.) | COMPOSITE |
| 10 | *(NOT USED)* | WOOD |
| 11 | *(NOT USED)* | WOOD |
| 12 | #10 WOOD INSTALLATION SCREW W/ 1 1/2" MIN. EMBEDMENT | STEEL |
| 13 | CONC./CMU ANCHOR (SEE ANCHOR TABLE SHEETS 2 & 3) | STEEL |
| 14 | BUTT HINGE (SEE SCHEDULE SHEET 5) | - |
| 15 | KWIKSET LOCK SERIES 400 | STEEL |
| 16 | KWIKSET DEADBOLT SERIES 780 | STEEL |
| 17 | HOPPE MULI-POINT HARDWARE HLS9000 (SEE SHEET 2 FOR HARDWARE AND FASTENING DETAILS) | STEEL |
| 18 | ODL LITE KIT (LMI) | 6063-T6 ALUMINUM |
| 19 | FLUSH GLAZING LEG | FIBERGLASS |
| 20 | ODL LIPLITE KIT (RADIUS LITES) | PC ABS |

## 17 HOPPE MULT-POINT LOCK

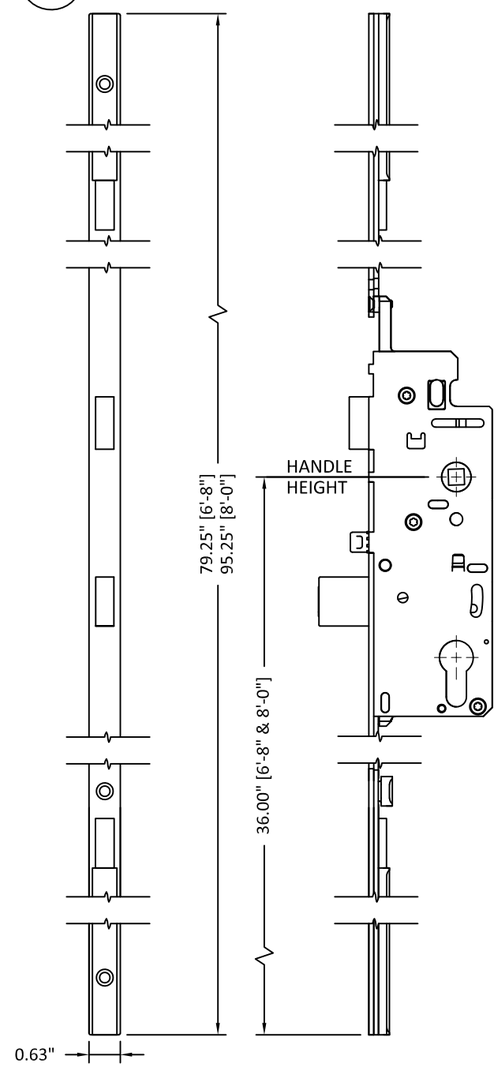


## 1 FRAME HEAD/JAMBS
VARIES, SEE BOM AT LEFT

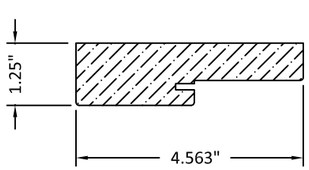


## 2 ENDURA ASTRAGAL
ALUMINUM

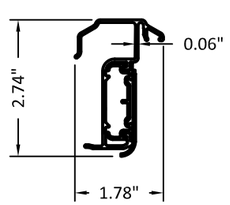


## 4 THRESHOLD

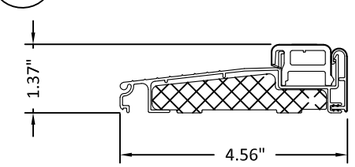


## 5 THRESHOLD

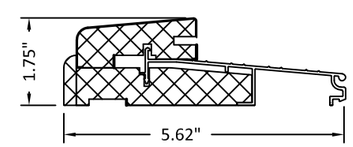


## 7 THRESHOLD

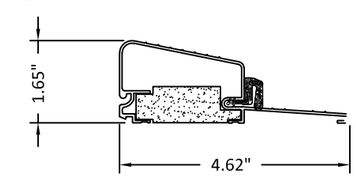


PREPARED BY:

TITLE: *DESIGN PRO/SMOOTH PRO FULL LITE IMPACT APPROVED*
COMPONENTS AND BILL OF MATERIALS

3737 LAKEPORT BLVD.,
KLAMATH FALLS, OR 97601
PH: (541)882-3451
FAX: (541)850-2609

| REMARKS | BY | DATE |
|---|---|---|
| | | |
| | | |
| | | |
| | | |

THIS DOCUMENT IS THE PROPERTY OF BUILDING DROPS, INC. AND SHALL NOT BE REPRODUCED IN WHOLE OR PART WITHOUT WRITTEN CONSENT OF BUILDING DROPS, INC. ALTERATIONS, ADDITIONS, HIGHLIGHTING, OR OTHER MARKINGS TO THIS DOCUMENT ARE NOT PERMITTED AND INVALIDATE OUR CERTIFICATION.

STATE OF TEXAS
JOSEPH A. REED
100777
LICENSED
PROFESSIONAL ENGINEER

2021.11.16 14:33:33 -05'00'

**JOSEPH A. REED, P.E.**
**Texas No. 100777**
**5 Leigh Drive**
**York, PA. 17406**
**(717) 846-1200**

DATE: 10.06.2021
DWG. BY: GL
CHK. BY: SS
SCALE: NTS
DWG. #: A010927
SHEET: 9 OF 9