NAILFIN/SCREW–WOOD INSTALLATION

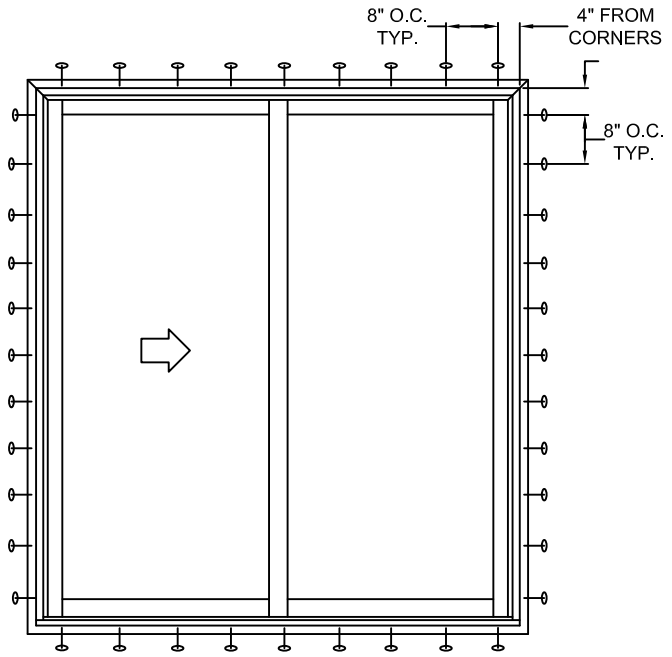

TYPICAL ELEVATION WITH FASTENER SPACING

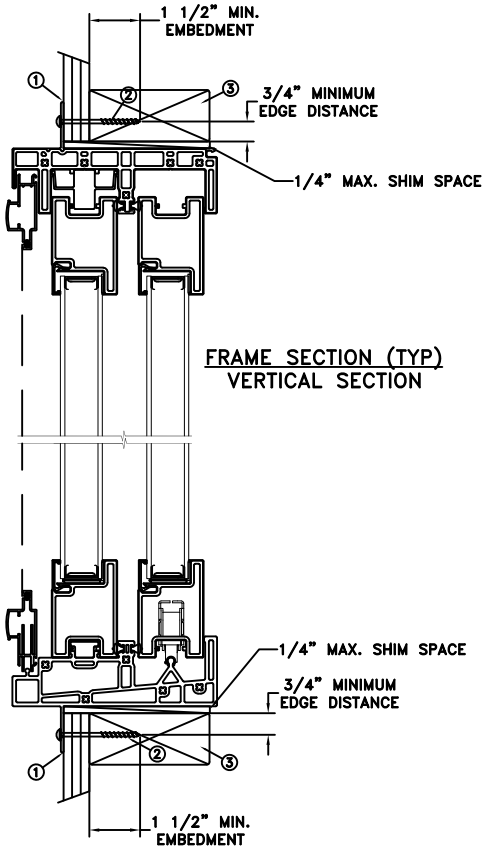

FRAME SECTION (TYP)
VERTICAL SECTION

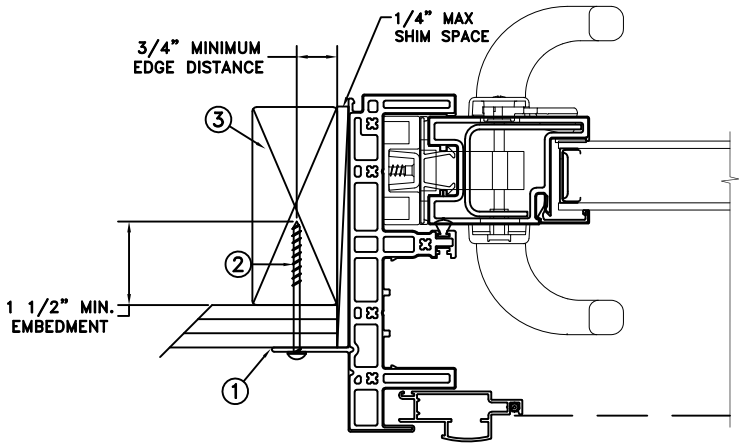

FRAME JAMB SECTION (TYP)
HORIZONTAL SECTION

MAXIMUM FRAME	DP	IMPACT
96 x 96	+35/–40	NO

Installation Notes:

1. Seal flange/frame to substrate. Sill shall be set on a continuous serpentine bead of structural grade silicone caulk when no fastener is used to anchor the sill (typical).
2. Use #8 PH or greater fastener through the nailing flange with sufficient length to penetrate a minimum of 1 1/2" into the wood framing. For 2x wood frame substrate (min. S.G. = 0.42)
3. Host structure (wood buck, masonry, steel) to be designed and anchored to properly transfer all loads to the structure. The host structure is the responsibility of the architect or engineer of record for the project of installation.

General Notes:

1. The product shown herein is designed,tested and manufactured to comply with the wind load criteria of the 2018 International Residential Code (IRC), the 2018 International Building Code (IBC).
2. All glazing shall conform to ASTM E1300.
3. At minimum, glazing shall be 4.0mm annealed - 12.7mm airspace - 4.0mm annealed glass.
4. Use structural or composite shims where required.

This schedule addresses only the fasteners required to anchor the unit to achieve the rated design pressure and impact performance (where applicable) up to the size limitations noted. It is not intended as a guide to the installation process and does not address the sealing consideration that may arise in different wall conditions. For the complete installation procedure, see the instructions packaged with the unit or go to www.jeld-wen.com.

DISCLAIMER:
This drawing and its contents are confidential and are not to be reproduced or copied in whole or in part or used or disclosed to others except as authorized by JELD-WEN Inc.

2021.10.27 16:19:42 -04'00'

JOSEPH A. REED, P.E.
Texas No. 100777
5 Leigh Drive
York, PA. 17406
(717) 846–1200

	DATE: 10/22/2021	JELD-WEN 3737 LAKEPORT BLVD. KLAMATH FALLS OR, 97601 PHONE: (800) 535-3936
DRAWN BY: M.HAM	SCALE: NTS	
CHECKED BY: J.GOOSSEN	TITLE: Auraline Composite Sliding Patio Door 2-Panel XO	
APPROVED BY: J.GOOSSEN		
RECORD No.: D015619		
REPORT No. M7463.01-301-47-R0	CAD DWG. No.: –	REV: A / SHEET 1 of 10

NAILFIN/NAIL–WOOD INSTALLATION

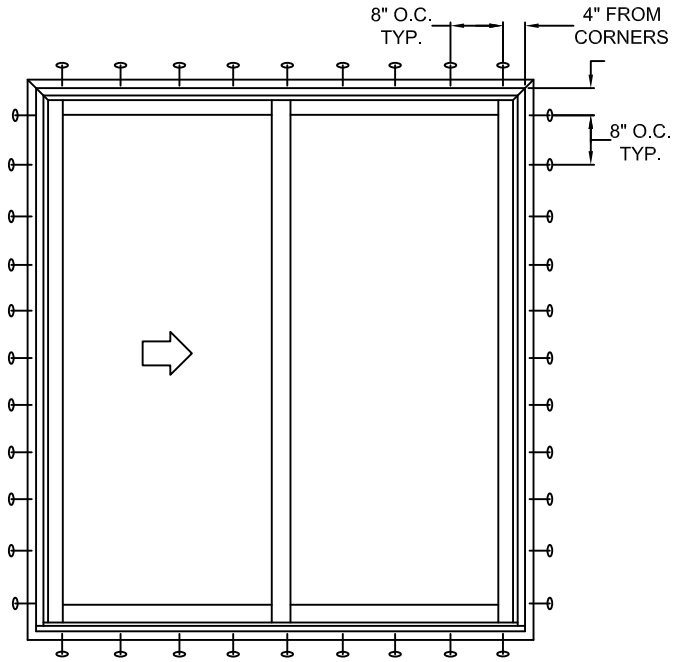

TYPICAL ELEVATION WITH FASTENER SPACING

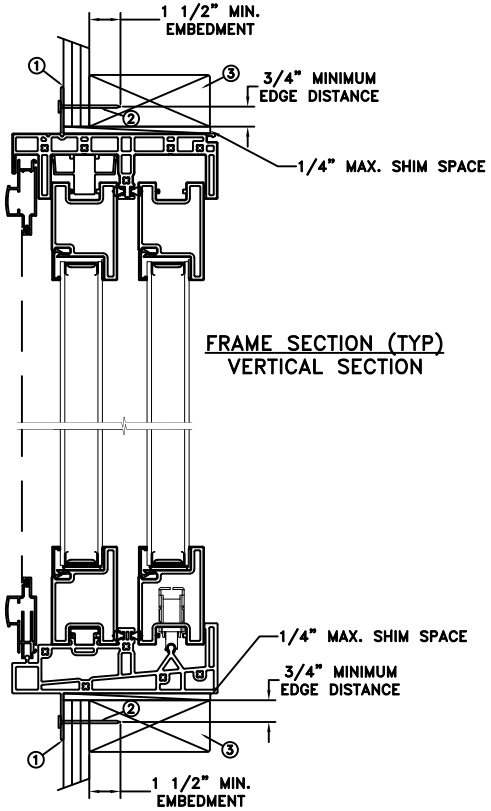

FRAME SECTION (TYP)
VERTICAL SECTION

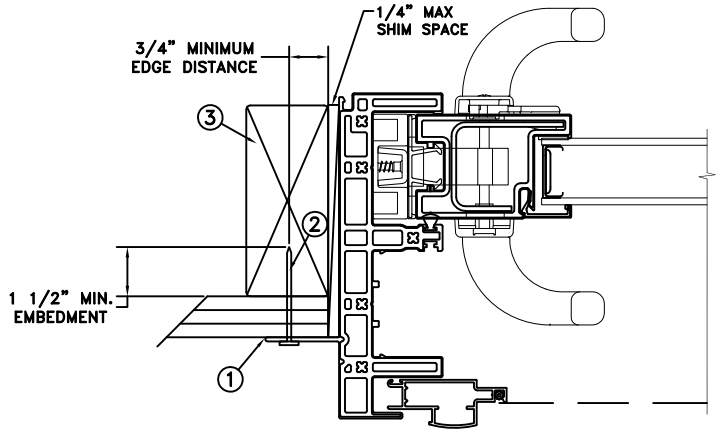

FRAME JAMB SECTION (TYP)
HORIZONTAL SECTION

MAXIMUM FRAME	DP	IMPACT
96 x 96	+35/–40	NO

Installation Notes:

1. Seal flange/frame to substrate. Sill shall be set on a continuous serpentine bead of structural grade silicone caulk when no fastener is used to anchor the sill (typical).
2. Use 6d x 2" fastener through the nailing flange with sufficient length to penetrate a minimum of 1 1/2" into the wood framing. For 2x wood frame substrate (min. S.G. = 0.42)
3. Host structure (wood buck, masonry, steel) to be designed and anchored to properly transfer all loads to the structure. The host structure is the responsibility of the architect or engineer of record for the project of installation.

General Notes:

1. The product shown herein is designed,tested and manufactured to comply with the wind load criteria of the 2018 International Residential Code (IRC), the 2018 International Building Code (IBC).
2. All glazing shall conform to ASTM E1300.
3. At minimum, glazing shall be 4.0mm annealed - 12.7mm airspace - 4.0mm annealed glass.
4. Use structural or composite shims where required.

This schedule addresses only the fasteners required to anchor the unit to achieve the rated design pressure and impact performance (where applicable) up to the size limitations noted. It is not intended as a guide to the installation process and does not address the sealing consideration that may arise in different wall conditions. For the complete installation procedure, see the instructions packaged with the unit or go to www.jeld-wen.com.

DISCLAIMER:
This drawing and its contents are confidential and are not to be reproduced or copied in whole or in part or used or disclosed to others except as authorized by JELD-WEN Inc.

STATE OF TEXAS
JOSEPH A. REED
100777
LICENSED
PROFESSIONAL ENGINEER

2021.10.27 16:19:42 -04'00'

JOSEPH A. REED, P.E.
Texas No. 100777
5 Leigh Drive
York, PA. 17406
(717) 846–1200

	DATE: 10/22/2021	JELD-WEN 3737 LAKEPORT BLVD. KLAMATH FALLS OR, 97601 PHONE: (800) 535-3936
DRAWN BY: M.HAM	SCALE: NTS	
CHECKED BY: J.GOOSSEN	TITLE: Auraline Composite Sliding Patio Door 2-Panel XO	
APPROVED BY: J.GOOSSEN		
RECORD No.: D015619		
REPORT No. M7463.01-301-47-R0	CAD DWG. No.: –	REV: A

NAILFIN/SCREW–STEEL INSTALLATION

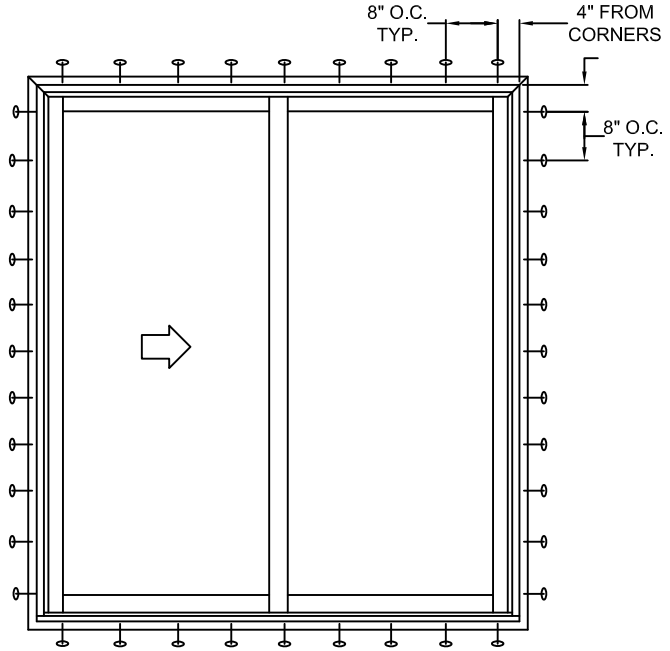

TYPICAL ELEVATION WITH FASTENER SPACING

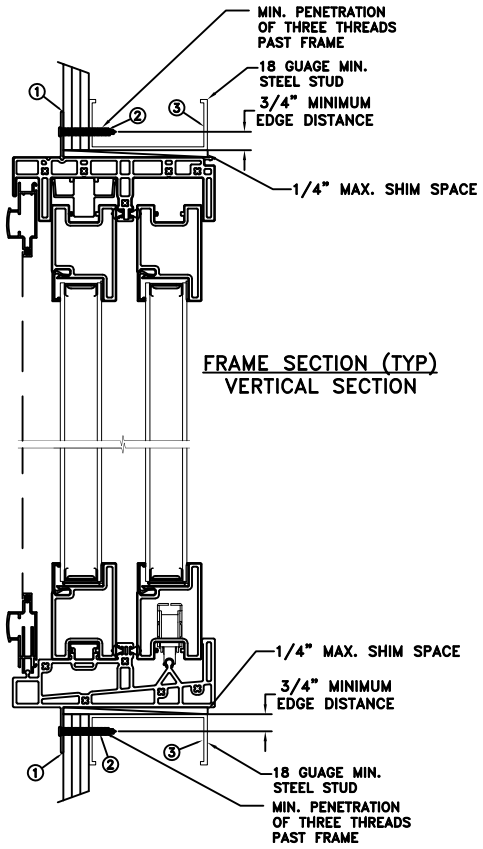

FRAME SECTION (TYP)
VERTICAL SECTION

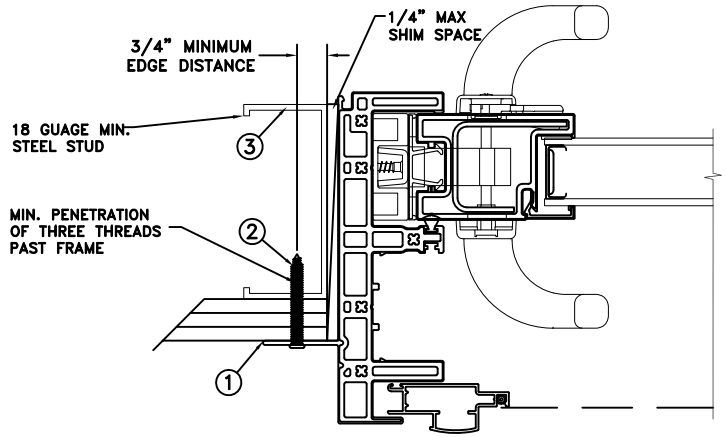

FRAME JAMB SECTION (TYP)
HORIZONTAL SECTION

MAXIMUM FRAME	DP	IMPACT
96 x 96	+35/−40	NO

Installation Notes:

1. Seal flange/frame to substrate. Sill shall be set on a continuous serpentine bead of structural grade silicone caulk when no fastener is used to anchor the sill (typical).
2. For anchoring through nailfin into metal framing use #10 TEK Self-Tapping screws with sufficient length to achieve a minimum penetration of three threads past the frame thickness. Steel substrate min. 18ga., fy = 33 ksi.
3. Host structure (wood buck, masonry, steel) to be designed and anchored to properly transfer all loads to the structure. The host structure is the responsibility of the architect or engineer of record for the project of installation.

General Notes:

1. The product shown herein is designed,tested and manufactured to comply with the wind load criteria of the 2018 International Residential Code (IRC), the 2018 International Building Code (IBC).
2. All glazing shall conform to ASTM E1300.
3. At minimum, glazing shall be 4.0mm annealed - 12.7mm airspace - 4.0mm annealed glass.
4. Use structural or composite shims where required.

This schedule addresses only the fasteners required to anchor the unit to achieve the rated design pressure and impact performance (where applicable) up to the size limitations noted. It is not intended as a guide to the installation process and does not address the sealing consideration that may arise in different wall conditions. For the complete installation procedure, see the instructions packaged with the unit or go to www.jeld-wen.com.

DISCLAIMER:
This drawing and its contents are confidential and are not to be reproduced or copied in whole or in part or used or disclosed to others except as authorized by JELD-WEN Inc.

STATE OF TEXAS
JOSEPH A. REED
100777
LICENSED
PROFESSIONAL ENGINEER

2021.10.27 16:19:42 -04'00'

JOSEPH A. REED, P.E.
Texas No. 100777
5 Leigh Drive
York, PA. 17406
(717) 846–1200

DATE: 10/22/2021	JELD-WEN	3737 LAKEPORT BLVD. KLAMATH FALLS OR, 97601 PHONE: (800) 535-3936
DRAWN BY: M.HAM	SCALE: NTS	
CHECKED BY: J.GOOSSEN	TITLE: Auraline Composite Sliding Patio Door 2-Panel XO	
APPROVED BY: J.GOOSSEN		
RECORD No.: D015619		
REPORT No. M7463.01-301-47-R0	CAD DWG. No.: –	REV: A

THROUGH FRAME/SCREW WOOD INSTALLATION

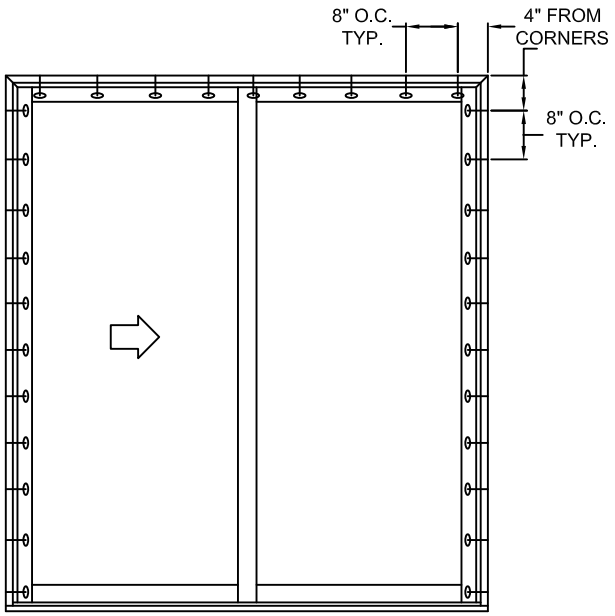

TYPICAL ELEVATION WITH FASTENER SPACING

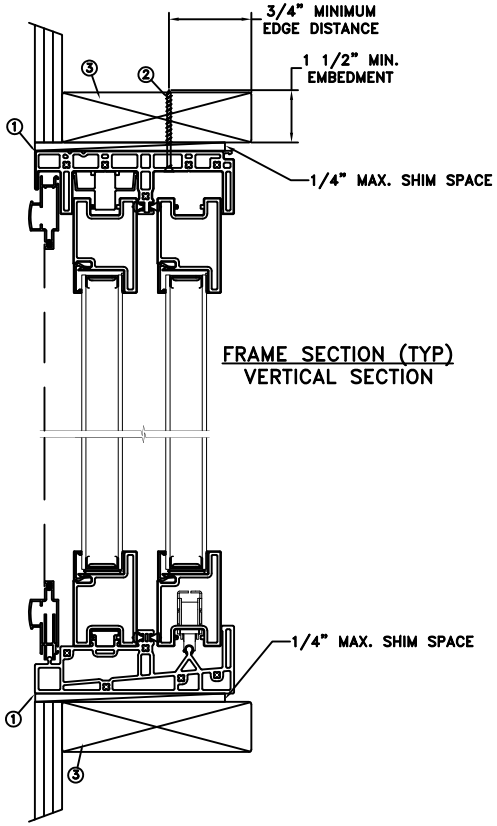

FRAME SECTION (TYP)
VERTICAL SECTION

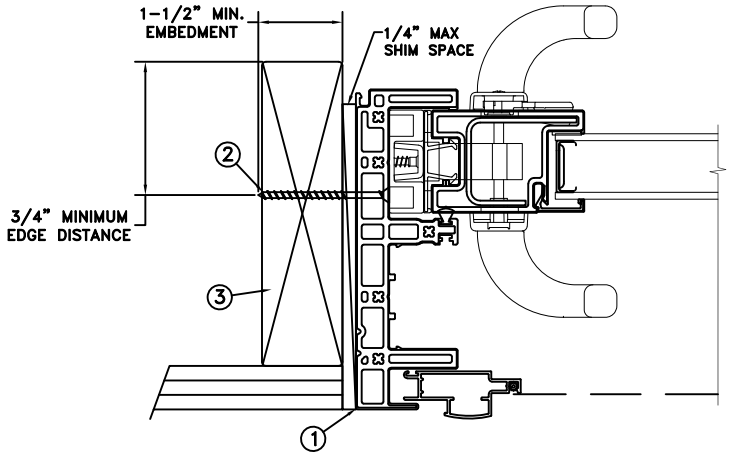

FRAME JAMB SECTION (TYP)
HORIZONTAL SECTION

MAXIMUM FRAME	DP	IMPACT
96 x 96	+35/−40	NO

Installation Notes:

1. Seal flange/frame to substrate. Sill shall be set on a continuous serpentine bead of structural grade silicone caulk when no fasteners are used to anchor the sill (typical).
2. Use #8 PH or greater fastener through the head & side jambs with sufficient length to penetrate a minimum of 1 1/2" into the wood framing. For 2x wood frame substrate (min. S.G. = 0.42)
3. Host structure (wood buck, masonry, steel) to be designed and anchored to properly transfer all loads to the structure. The host structure is the responsibility of the architect or engineer of record for the project of installation.

General Notes:

1. The product shown herein is designed,tested and manufactured to comply with the wind load criteria of the 2018 International Residential Code (IRC), the 2018 International Building Code (IBC).
2. All glazing shall conform to ASTM E1300.
3. At minimum, glazing shall be 4.0mm annealed - 12.7mm airspace - 4.0mm annealed glass.
4. Use structural or composite shims where required.

This schedule addresses only the fasteners required to anchor the unit to achieve the rated design pressure and impact performance (where applicable) up to the size limitations noted. It is not intended as a guide to the installation process and does not address the sealing consideration that may arise in different wall conditions. For the complete installation procedure, see the instructions packaged with the unit or go to www.jeld-wen.com.

DISCLAIMER:
This drawing and its contents are confidential and are not to be reproduced or copied in whole or in part or used or disclosed to others except as authorized by JELD-WEN Inc.

2021.10.27 16:19:42 -04'00'

JOSEPH A. REED, P.E.
Texas No. 100777
5 Leigh Drive
York, PA. 17406
(717) 846-1200

	DATE: 10/22/2021	JELD-WEN 3737 LAKEPORT BLVD. KLAMATH FALLS OR, 97601 PHONE: (800) 535-3936
DRAWN BY: M.HAM	SCALE: NTS	
CHECKED BY: J.GOOSSEN	TITLE: Auraline Composite Sliding Patio Door 2-Panel XO	
APPROVED BY: J.GOOSSEN		
RECORD No.: D015619		
REPORT No. M7463.01-301-47-R0	CAD DWG. No.: –	REV: A

THROUGH FRAME/SCREW STEEL INSTALLATION

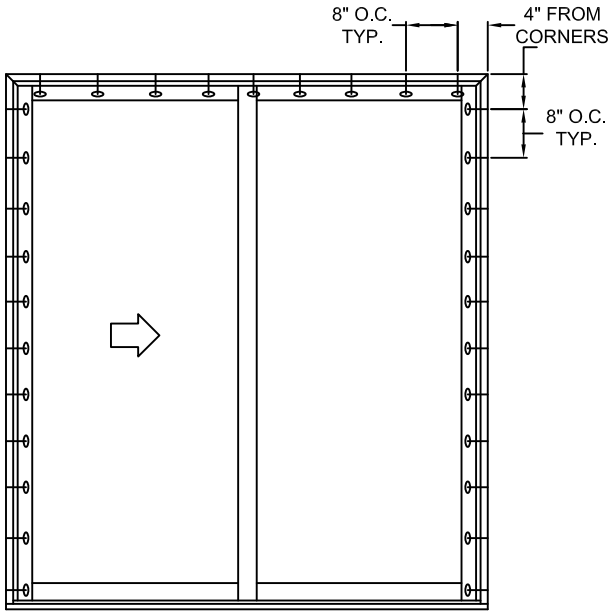

TYPICAL ELEVATION WITH FASTENER SPACING

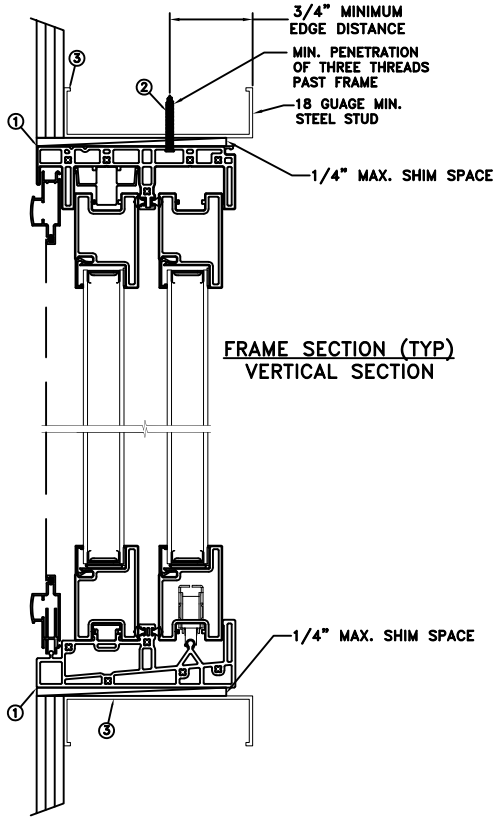

FRAME SECTION (TYP)
VERTICAL SECTION

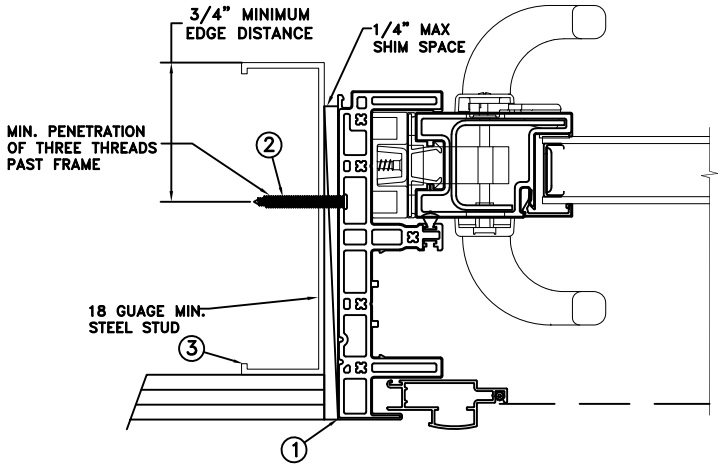

FRAME JAMB SECTION (TYP)
HORIZONTAL SECTION

MAXIMUM FRAME	DP	IMPACT
96 x 96	+35/−40	NO

Installation Notes:

1. Seal flange/frame to substrate. Sill shall be set on a continuous serpentine bead of structural grade silicone caulk when no fastener is used to anchor the sill (typical).
2. For anchoring through head and side jambs into metal framing use #10 TEK Self-Tapping screws with sufficient length to achieve a minimum penetration of three threads past the frame thickness. Steel substrate min. 18ga., fy = 33 ksi.
3. Host structure (wood buck, masonry, steel) to be designed and anchored to properly transfer all loads to the structure. The host structure is the responsibility of the architect or engineer of record for the project of installation.

General Notes:

1. The product shown herein is designed,tested and manufactured to comply with the wind load criteria of the 2018 International Residential Code (IRC), the 2018 International Building Code (IBC).
2. All glazing shall conform to ASTM E1300.
3. At minimum, glazing shall be 4.0mm annealed - 12.7mm airspace - 4.0mm annealed glass.
4. Use structural or composite shims where required.

This schedule addresses only the fasteners required to anchor the unit to achieve the rated design pressure and impact performance (where applicable) up to the size limitations noted. It is not intended as a guide to the installation process and does not address the sealing consideration that may arise in different wall conditions. For the complete installation procedure, see the instructions packaged with the unit or go to www.jeld-wen.com.

DISCLAIMER:
This drawing and its contents are confidential and are not to be reproduced or copied in whole or in part or used or disclosed to others except as authorized by JELD-WEN Inc.

2021.10.27 16:19:42 -04'00'

JOSEPH A. REED, P.E.
Texas No. 100777
5 Leigh Drive
York, PA. 17406
(717) 846-1200

	DATE: 10/22/2021	JELD-WEN 3737 LAKEPORT BLVD. KLAMATH FALLS OR, 97601 PHONE: (800) 535-3936
DRAWN BY: M.HAM	SCALE: NTS	
CHECKED BY: J.GOOSSEN	TITLE: Auraline Composite Sliding Patio Door 2-Panel XO	
APPROVED BY: J.GOOSSEN		
RECORD No.: D015619		
REPORT No. M7463.01-301-47-R0	CAD DWG. No.: –	REV: A

THROUGH FRAME/SCREW CONCRETE INSTALLATION

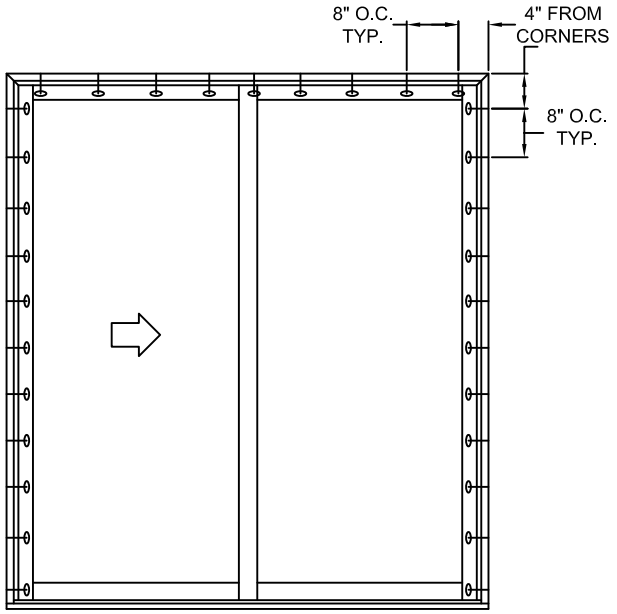

TYPICAL ELEVATION WITH FASTENER SPACING

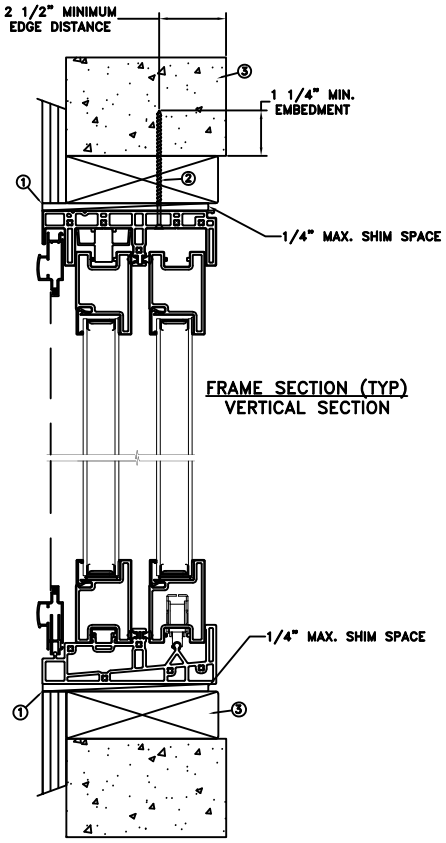

FRAME SECTION (TYP)
VERTICAL SECTION

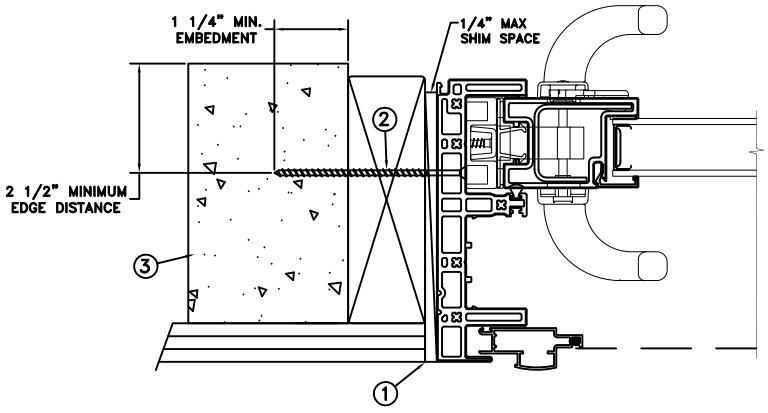

FRAME JAMB SECTION (TYP)
HORIZONTAL SECTION

MAXIMUM FRAME	DP	IMPACT
96 x 96	+35/−40	NO

Installation Notes:

1. Seal flange/frame to substrate. Sill shall be set on a continuous serpentine bead of structural grade silicone caulk when no fastener is used to anchor the sill (typical).
2. Use 3/16" Tapcon or equivalent fasteners through the head and side jambs with sufficient length to penetrate a minimum of 1 1/4" into concrete or masonry at each location with a 2 1/2" min. from edge distance. For concrete (min. fc = 3000 psi) or masonry substrate (CMU shall be ASTM C90).
3. Host structure (wood buck, masonry, steel) to be designed and anchored to properly transfer all loads to the structure. The host structure is the responsibility of the architect or engineer of record for the project of installation.

General Notes:

1. The product shown herein is designed,tested and manufactured to comply with the wind load criteria of the 2018 International Residential Code (IRC), the 2018 International Building Code (IBC).
2. All glazing shall conform to ASTM E1300.
3. At minimum, glazing shall be 4.0mm annealed - 12.7mm airspace - 4.0mm annealed glass.
4. Use structural or composite shims where required.

This schedule addresses only the fasteners required to anchor the unit to achieve the rated design pressure and impact performance (where applicable) up to the size limitations noted. It is not intended as a guide to the installation process and does not address the sealing consideration that may arise in different wall conditions. For the complete installation procedure, see the instructions packaged with the unit or go to www.jeld-wen.com.

DISCLAIMER:
This drawing and its contents are confidential and are not to be reproduced or copied in whole or in part or used or disclosed to others except as authorized by JELD-WEN Inc.

2021.10.27 16:19:42 -04'00'

JOSEPH A. REED, P.E.
Texas No. 100777
5 Leigh Drive
York, PA. 17406
(717) 846-1200

	DATE: 10/22/2021	JELD-WEN 3737 LAKEPORT BLVD. KLAMATH FALLS OR, 97601 PHONE: (800) 535-3936
DRAWN BY: M.HAM	SCALE: NTS	
CHECKED BY: J.GOOSSEN	TITLE: Auraline Composite Sliding Patio Door 2-Panel XO	
APPROVED BY: J.GOOSSEN		
RECORD No.: D015619		
REPORT No. M7463.01-301-47-R0	CAD DWG. No.: –	REV: A

MASONRY STRAP WOOD/SCREW INSTALLATION

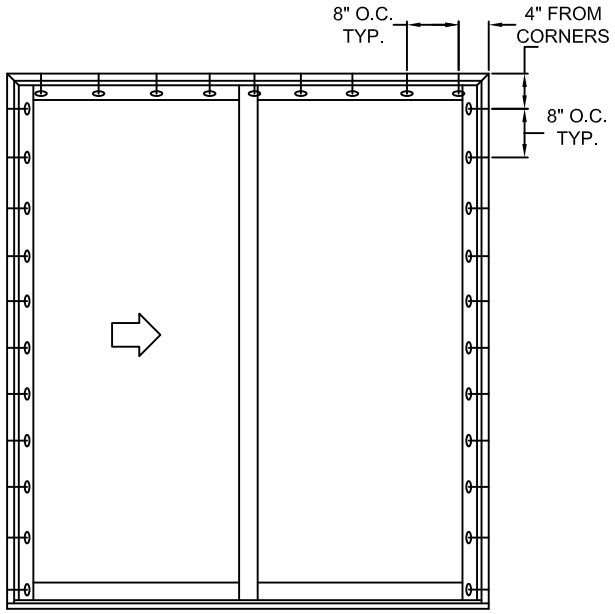

TYPICAL ELEVATION WITH FASTENER SPACING

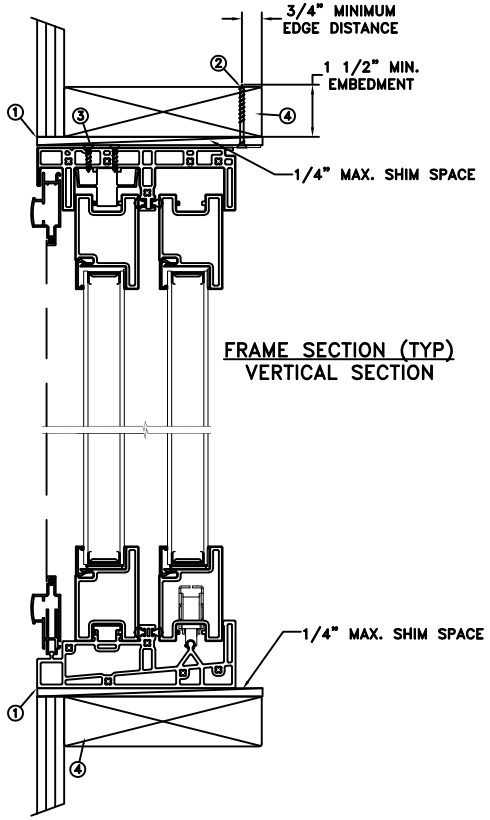

FRAME SECTION (TYP)
VERTICAL SECTION

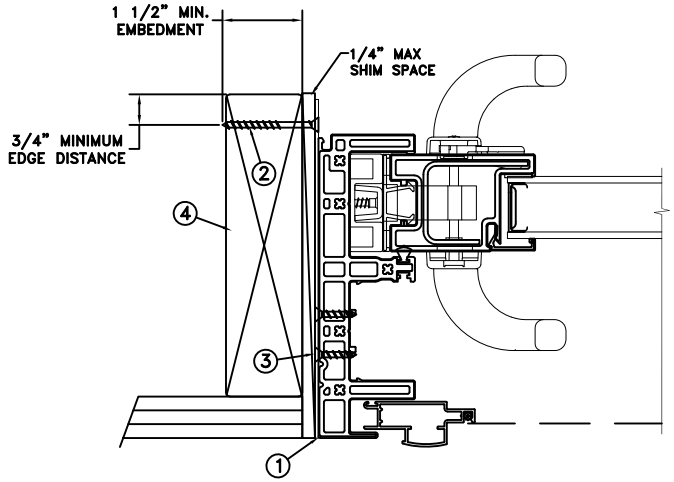

FRAME JAMB SECTION (TYP)
HORIZONTAL SECTION

MAXIMUM FRAME	DP	IMPACT
96 x 96	+35/−40	NO

Installation Notes:

1. Seal flange/frame to substrate. Sill shall be set on a continuous serpentine bead of structural grade silicone caulk when no fastener is used to anchor the sill (typical).
2. Use 2 - #8 PFH or larger fasteners through masonry strap with sufficient length to penetrate a minimum of 1 1/2" into the buck. For 2x wood frame substrate (min. S.G. = 0.42).
3. Use 2 - #8 PFH or larger fasteners through masonry strap into jamb without penetrating through the jamb into product causing visability or collateral damage to product.
4. Host structure (wood buck, masonry, steel) to be designed and anchored to properly transfer all loads to the structure. The host structure is the responsibility of the architect or engineer of record for the project of installation.

General Notes:

1. The product shown herein is designed,tested and manufactured to comply with the wind load criteria of the 2018 International Residential Code (IRC), the 2018 International Building Code (IBC).
2. All glazing shall conform to ASTM E1300.
3. At minimum, glazing shall be 4.0mm annealed - 12.7mm airspace - 4.0mm annealed glass.
4. Use structural or composite shims where required.
5. Masonry strap specifications: 20 Ga. galvanized steel, .096" min. thickness x 1.5" min. width.

This schedule addresses only the fasteners required to anchor the unit to achieve the rated design pressure and impact performance (where applicable) up to the size limitations noted. It is not intended as a guide to the installation process and does not address the sealing consideration that may arise in different wall conditions. For the complete installation procedure, see the instructions packaged with the unit or go to www.jeld-wen.com.

DISCLAIMER:
This drawing and its contents are confidential and are not to be reproduced or copied in whole or in part or used or disclosed to others except as authorized by JELD-WEN Inc.

STATE OF TEXAS
JOSEPH A. REED
100777
LICENSED
PROFESSIONAL ENGINEER

2021.10.27 16:19:42 -04'00'

JOSEPH A. REED, P.E.
Texas No. 100777
5 Leigh Drive
York, PA. 17406
(717) 846-1200

	DATE: 10/22/2021	JELD-WEN	3737 LAKEPORT BLVD. KLAMATH FALLS OR, 97601 PHONE: (800) 535-3936
DRAWN BY: M.HAM	SCALE: NTS		
CHECKED BY: J.GOOSSEN	TITLE: Auraline Composite Sliding Patio Door 2-Panel XO		
APPROVED BY: J.GOOSSEN			
RECORD No.: D015619			
REPORT No. M7463.01-301-47-R0	CAD DWG. No.: –	REV: A	SHEET 7 of 10

MASONRY STRAP
WOOD/NAIL INSTALLATION

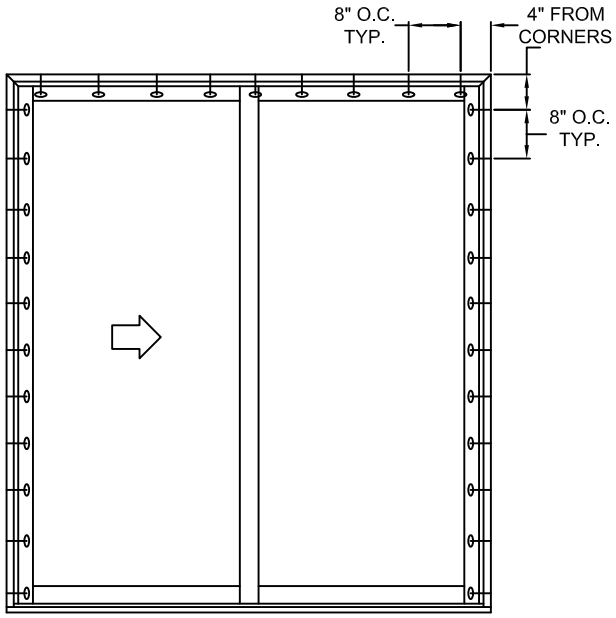

TYPICAL ELEVATION WITH FASTENER SPACING

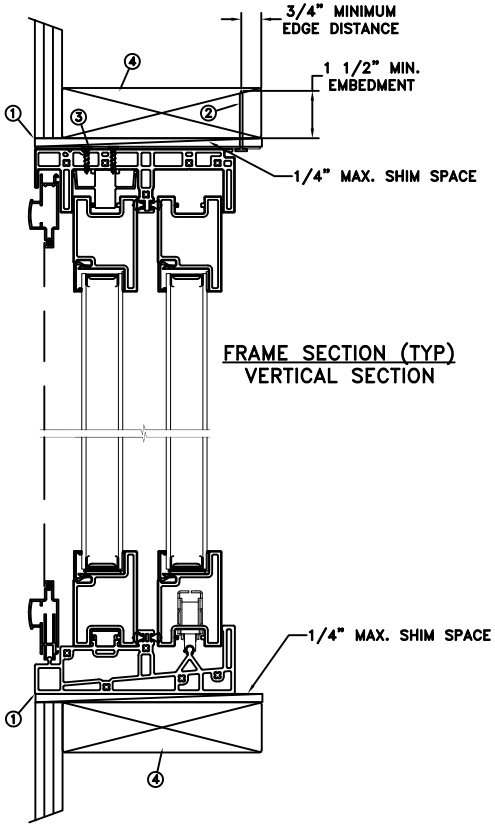

FRAME SECTION (TYP)
VERTICAL SECTION

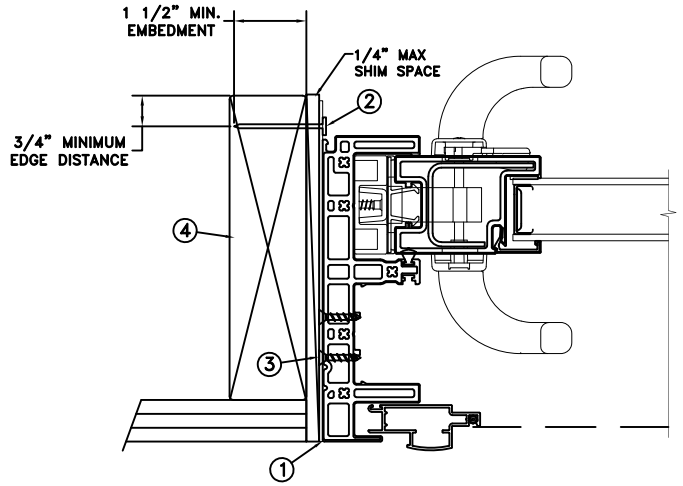

FRAME JAMB SECTION (TYP)
HORIZONTAL SECTION

MAXIMUM FRAME	DP	IMPACT
96 x 96	+35/−40	NO

Installation Notes:

1. Seal flange/frame to substrate. Sill shall be set on a continuous serpentine bead of structural grade silicone caulk when no fastener is used to anchor the sill (typical).
2. Use 2 - 6d x 2" fasteners through masonry strap with sufficient length to penetrate a minimum of 1 1/2" into the buck. For 2x wood frame substrate (min. S.G. = 0.42).
3. Use 2 - #8 PFH or larger fasteners through masonry strap into jamb without penetrating through the jamb into product causing visability or collateral damage to product.
4. Host structure (wood buck, masonry, steel) to be designed and anchored to properly transfer all loads to the structure. The host structure is the responsibility of the architect or engineer of record for the project of installation.

General Notes:

1. The product shown herein is designed,tested and manufactured to comply with the wind load criteria of the 2018 International Residential Code (IRC), the 2018 International Building Code (IBC).
2. All glazing shall conform to ASTM E1300.
3. At minimum, glazing shall be 4.0mm annealed - 12.7mm airspace - 4.0mm annealed glass.
4. Use structural or composite shims where required.
5. Masonry strap specifications: 20 Ga. galvanized steel, .096" min. thickness x 1.5" min. width.

This schedule addresses only the fasteners required to anchor the unit to achieve the rated design pressure and impact performance (where applicable) up to the size limitations noted. It is not intended as a guide to the installation process and does not address the sealing consideration that may arise in different wall conditions. For the complete installation procedure, see the instructions packaged with the unit or go to www.jeld-wen.com.

DISCLAIMER:
This drawing and its contents are confidential and are not to be reproduced or copied in whole or in part or used or disclosed to others except as authorized by JELD-WEN Inc.

STATE OF TEXAS
JOSEPH A. REED
100777
LICENSED
PROFESSIONAL ENGINEER

2021.10.27 16:19:42 -04'00'

JOSEPH A. REED, P.E.
Texas No. 100777
5 Leigh Drive
York, PA. 17406
(717) 846-1200

	DATE: 10/22/2021	JELD-WEN 3737 LAKEPORT BLVD. KLAMATH FALLS OR, 97601 PHONE: (800) 535-3936
DRAWN BY: M.HAM	SCALE: NTS	
CHECKED BY: J.GOOSSEN	TITLE: Auraline Composite Sliding Patio Door 2-Panel XO	
APPROVED BY: J.GOOSSEN		
RECORD No.: D015619		
REPORT No. M7463.01-301-47-R0	CAD DWG. No.: –	REV: A / SHEET 8 of 10

MASONRY STRAP STEEL/SCREW INSTALLATION

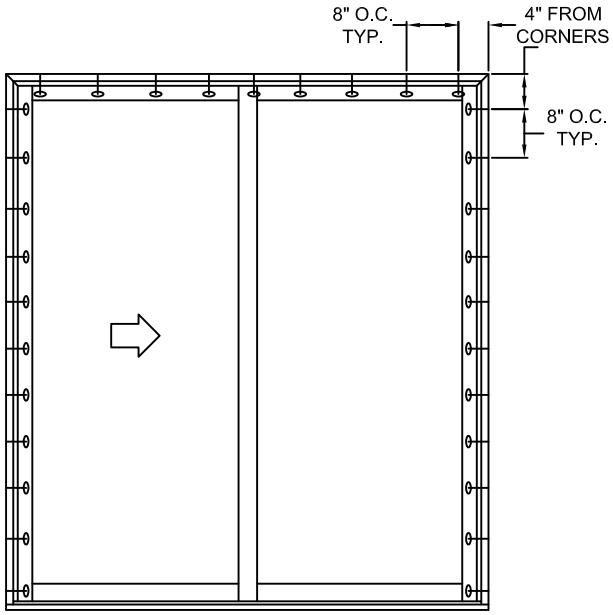

TYPICAL ELEVATION WITH FASTENER SPACING

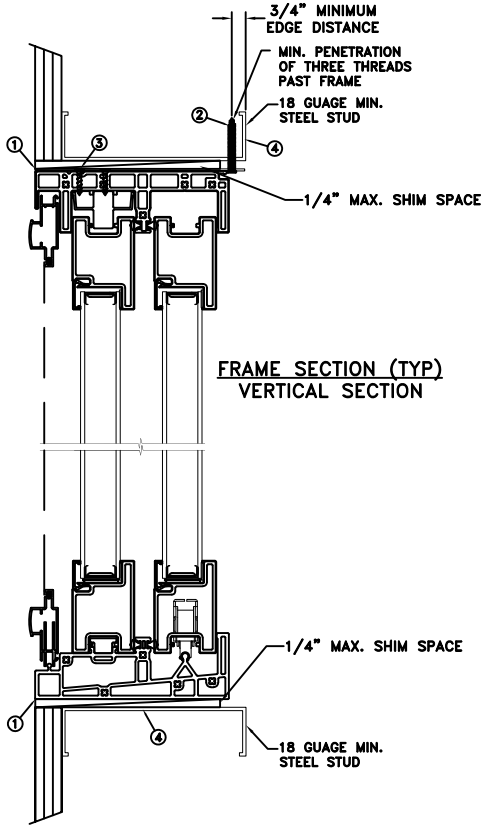

FRAME SECTION (TYP)
VERTICAL SECTION

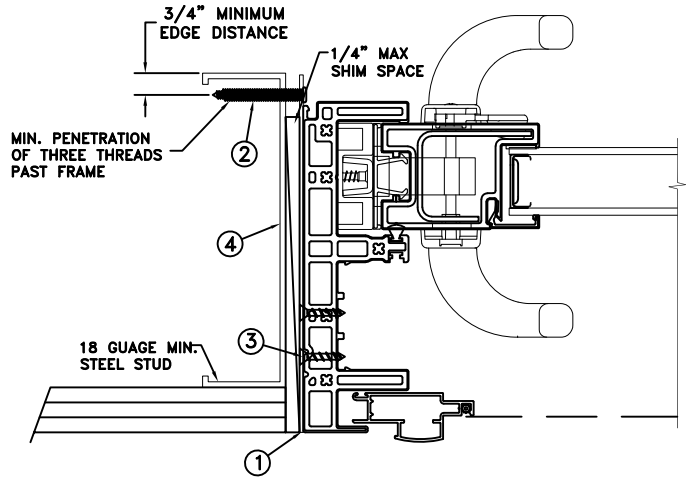

FRAME JAMB SECTION (TYP)
HORIZONTAL SECTION

MAXIMUM FRAME	DP	IMPACT
96 x 96	+35/−40	NO

Installation Notes:

1. Seal flange/frame to substrate. Sill shall be set on a continuous serpentine bead of structural grade silicone caulk when no fastener is used to anchor the sill (typical).
2. Use 2 - #10 TEK Self-Tapping or larger screws through masonry strap with sufficient length to achieve a minimum penetration of three threads past the frame thickness. Steel substrate min. 18ga., fy = 33 ksi.
3. Use 2 - #8 PFH or larger fasteners through masonry strap into jamb without penetrating through the jamb into product causing visability or collateral damage to product.
4. Host structure (wood buck, masonry, steel) to be designed and anchored to properly transfer all loads to the structure. The host structure is the responsibility of the architect or engineer of record for the project of installation.

General Notes:

1. The product shown herein is designed,tested and manufactured to comply with the wind load criteria of the 2018 International Residential Code (IRC), the 2018 International Building Code (IBC).
2. All glazing shall conform to ASTM E1300.
3. At minimum, glazing shall be 4.0mm annealed - 12.7mm airspace - 4.0mm annealed glass.
4. Use structural or composite shims where required.
5. Masonry strap specifications: 20 Ga. galvanized steel, .096" min. thickness x 1.5" min. width.

This schedule addresses only the fasteners required to anchor the unit to achieve the rated design pressure and impact performance (where applicable) up to the size limitations noted. It is not intended as a guide to the installation process and does not address the sealing consideration that may arise in different wall conditions. For the complete installation procedure, see the instructions packaged with the unit or go to www.jeld-wen.com.

DISCLAIMER:
This drawing and its contents are confidential and are not to be reproduced or copied in whole or in part or used or disclosed to others except as authorized by JELD-WEN Inc.

2021.10.27 16:19:42 -04'00'

JOSEPH A. REED, P.E.
Texas No. 100777
5 Leigh Drive
York, PA. 17406
(717) 846-1200

	DATE: 10/22/2021	JELD-WEN 3737 LAKEPORT BLVD. KLAMATH FALLS OR, 97601 PHONE: (800) 535-3936
DRAWN BY: M.HAM	SCALE: NTS	
CHECKED BY: J.GOOSSEN	TITLE: Auraline Composite Sliding Patio Door 2-Panel XO	
APPROVED BY: J.GOOSSEN		
RECORD No.: D015619		
REPORT No. M7463.01-301-47-R0	CAD DWG. No.: –	REV: A / SHEET 9 of 10

MASONRY STRAP CONCRETE SCREW INSTALLATION

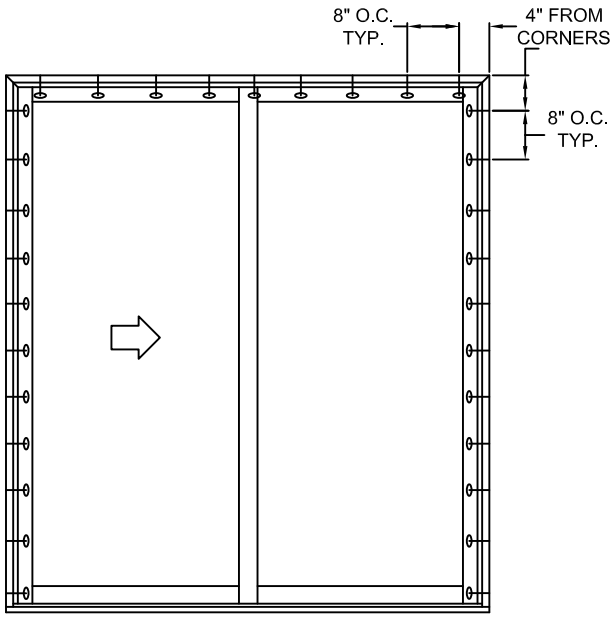

TYPICAL ELEVATION WITH FASTENER SPACING

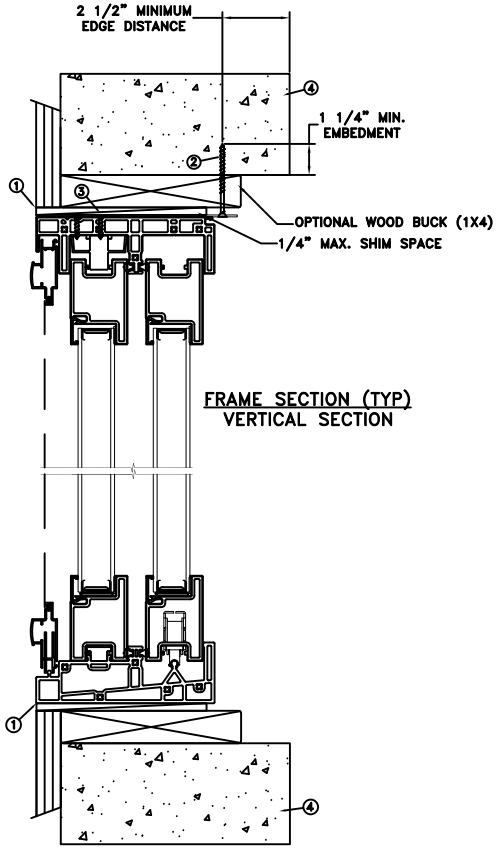

FRAME SECTION (TYP)
VERTICAL SECTION

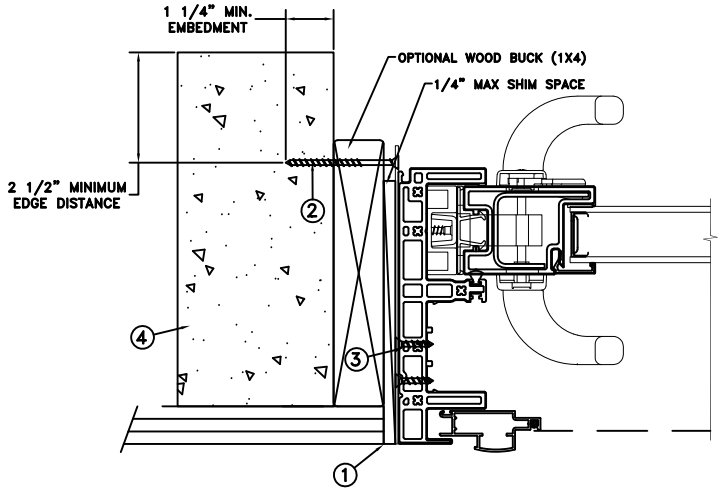

FRAME JAMB SECTION (TYP)
HORIZONTAL SECTION

MAXIMUM FRAME	DP	IMPACT
96 x 96	+35/−40	NO

Installation Notes:

1. Seal flange/frame to substrate. Sill shall be set on a continuous serpentine bead of structural grade silicone caulk when no fastener is used to anchor the sill (typical).
2. Use 1 - 3/16" Tapcon or equivalent fasteners through masonry strap with sufficient length to penetrate a minimum of 1 1/4" into the buck or concrete. For 2x wood frame substrate (min. S.G. = 0.42). For concrete (min. fc = 3000 psi) or masonry substrate (CMU shall be ASTM C90).
3. Use 2 - #8 PFH or larger fasteners through masonry strap into jamb without penetrating through the jamb into product causing visability or collateral damage to product.
4. Host structure (wood buck, masonry, steel) to be designed and anchored to properly transfer all loads to the structure. The host structure is the responsibility of the architect or engineer of record for the project of installation.

General Notes:

1. The product shown herein is designed,tested and manufactured to comply with the wind load criteria of the 2018 International Residential Code (IRC), the 2018 International Building Code (IBC).
2. All glazing shall conform to ASTM E1300.
3. At minimum, glazing shall be 4.0mm annealed - 12.7mm airspace - 4.0mm annealed glass.
4. Use structural or composite shims where required.
5. Masonry strap specifications: 20 Ga. galvanized steel, .096" min. thickness x 1.5" min. width.

This schedule addresses only the fasteners required to anchor the unit to achieve the rated design pressure and impact performance (where applicable) up to the size limitations noted. It is not intended as a guide to the installation process and does not address the sealing consideration that may arise in different wall conditions. For the complete installation procedure, see the instructions packaged with the unit or go to www.jeld-wen.com.

DISCLAIMER:
This drawing and its contents are confidential and are not to be reproduced or copied in whole or in part or used or disclosed to others except as authorized by JELD-WEN Inc.

STATE OF TEXAS
JOSEPH A. REED
100777
LICENSED
PROFESSIONAL ENGINEER

2021.10.27 16:19:42 -04'00'

JOSEPH A. REED, P.E.
Texas No. 100777
5 Leigh Drive
York, PA. 17406
(717) 846-1200

	DATE: 10/22/2021	JELD-WEN 3737 LAKEPORT BLVD. KLAMATH FALLS OR, 97601 PHONE: (800) 535-3936
DRAWN BY: M.HAM	SCALE: NTS	
CHECKED BY: J.GOOSSEN	TITLE: Auraline Composite Sliding Patio Door 2-Panel XO	
APPROVED BY: J.GOOSSEN		
RECORD No.: D015619		
REPORT No. M7463.01-301-47-R0	CAD DWG. No.: –	REV: A / SHEET 10 of 10