THROUGH FRAME INSTALLATION

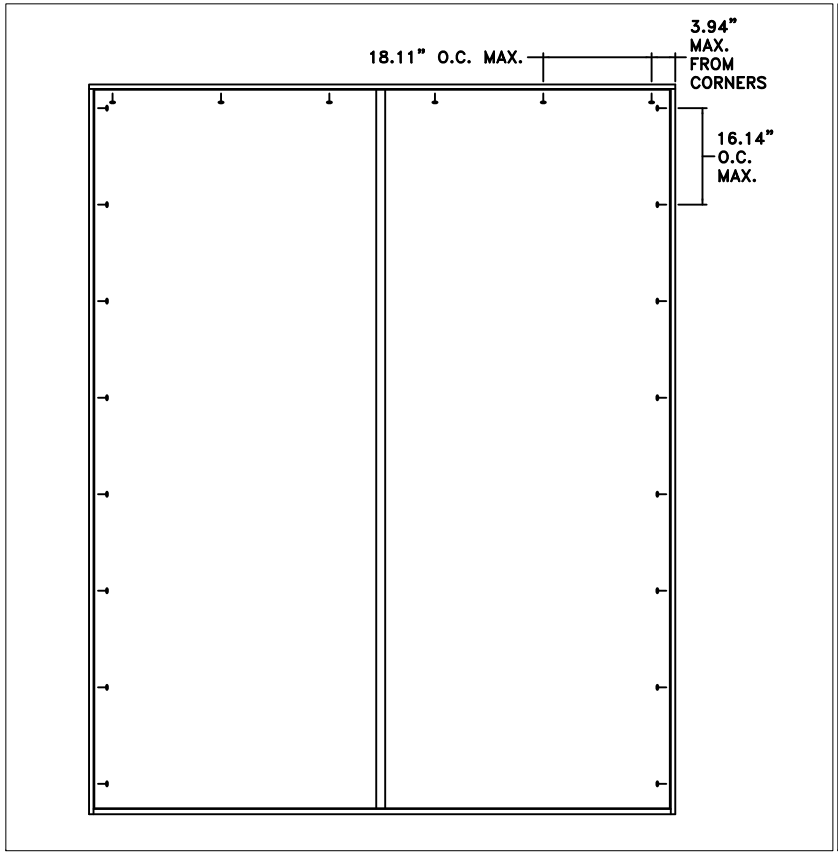

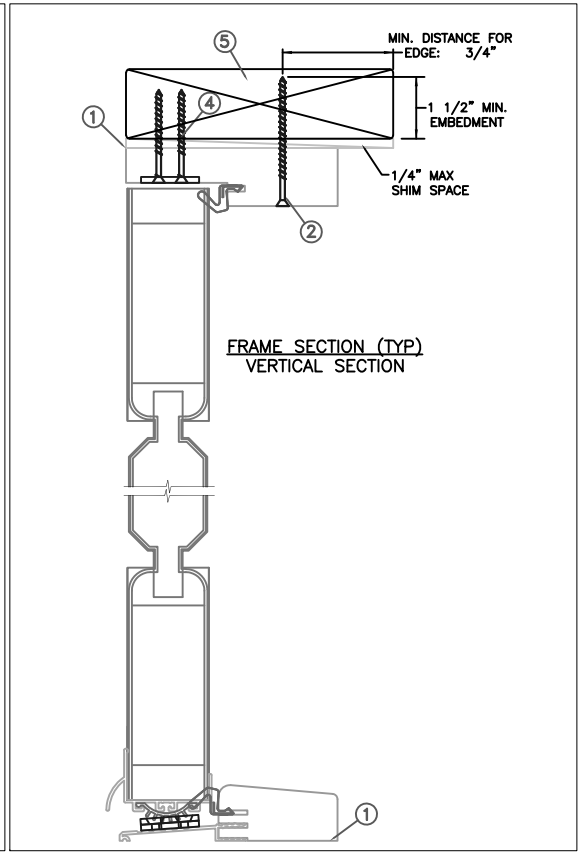

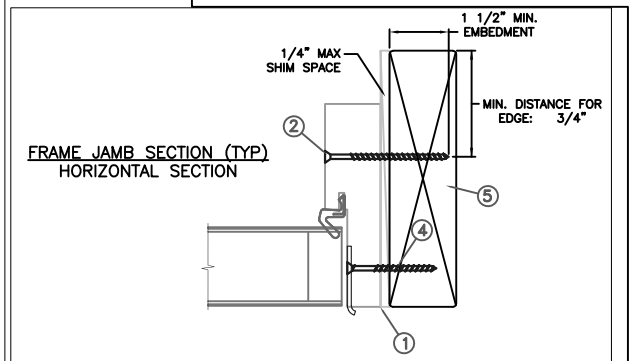

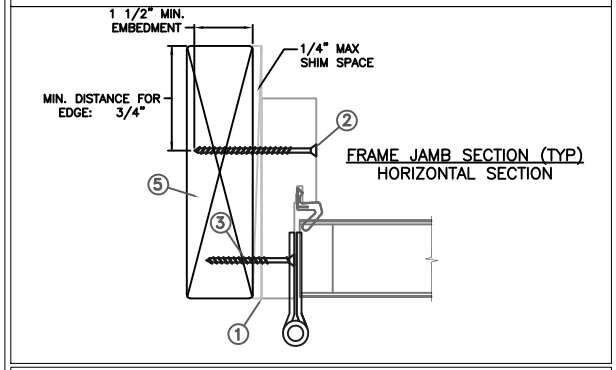

Max Frame	DP Rating	Impact
97 7/8" x 121 9/16"	+50/−65	NO

Installed Fastener Schedule:

1. Seal flange/frame to substrate. Sill shall be set on a continuous serpentine bead of structural grade silicone caulk (typ.).
2. Use #8 PH or greater fasteners through frame with sufficient length to penetrate a minimum of 1 1/2" into the wood framing. For 2X wood frame substrate (min. S.G. = 0.42).
3. Install corrosion resistant 2-#12 X 3" screws through each hinge into rough opening.
4. Install corrosion resistant 2-#12 X 3" screws through each strike plate into rough opening.
5. Host structure (wood buck, stud framing and opening) to be designed and anchored to properly transfer all loads to the structure. The host structure is the responsibility of the architect or engineer of record for the project of installation.

This schedule addresses only the fasteners required to anchor the door to achieve the rated design pressure up to the size limitations noted. It is not intended as a guide to the installation process and does not address the sealing consideration that may arise in different wall conditions. For the complete installation procedure, see the instructions packaged with the door or go to www.jeld-wen.com.

DISCLAIMER:
This drawing and its contents are confidential and are not to be reproduced or copied in whole or in part or used or disclosed to others except as authorized by JELD-WEN Inc.

General Notes:

1. The product shown herein is designed, tested and manufactured to comply with the wind load criteria of the adopted International Building Code (IBC), the International Residential Code (IRC), the Texas Revisions and the industry standard requirement for the stated conditions.
2. Buck, framing and masonry by others and is responsibility of architect or engineer of record.
3. All glazing shall conform to ASTM E1300.

Digitally signed by Hermes F Norero
Reason: I am approving this document
Date: 2019.06.12 17:10:24 -04'00'

STATE OF TEXAS
HERMES F NORERO
118471
LICENSED
PROFESSIONAL ENGINEER

HERMES F. NORERO, P.E.
Texas No. 118471
398 East Dania Beach Blvd. Suite 338
Dania Beach, FL 33004

PROJECT ENGINEER: --	DATE: 06/11/2019	JELD-WEN	3737 Lakeport Blvd Klamath Falls, OR. 97601 Phone: (800) 535-3936
DRAWN BY: D. Vezo	SCALE: NTS		
CHECKED BY: J. Hawkins	TITLE: Aurora Outswing Non Impact Opaque Door		
APPROVED BY: D. Vezo			
PART/PROJECT No.: D014926			
IDENTIFIER No. 110-17-155-OS	PLANT NAME AND LOCATION: ----	CAD DWG. No.:	REV: 00 / SHEET 1 of 6

THROUGH FRAME INSTALLATION

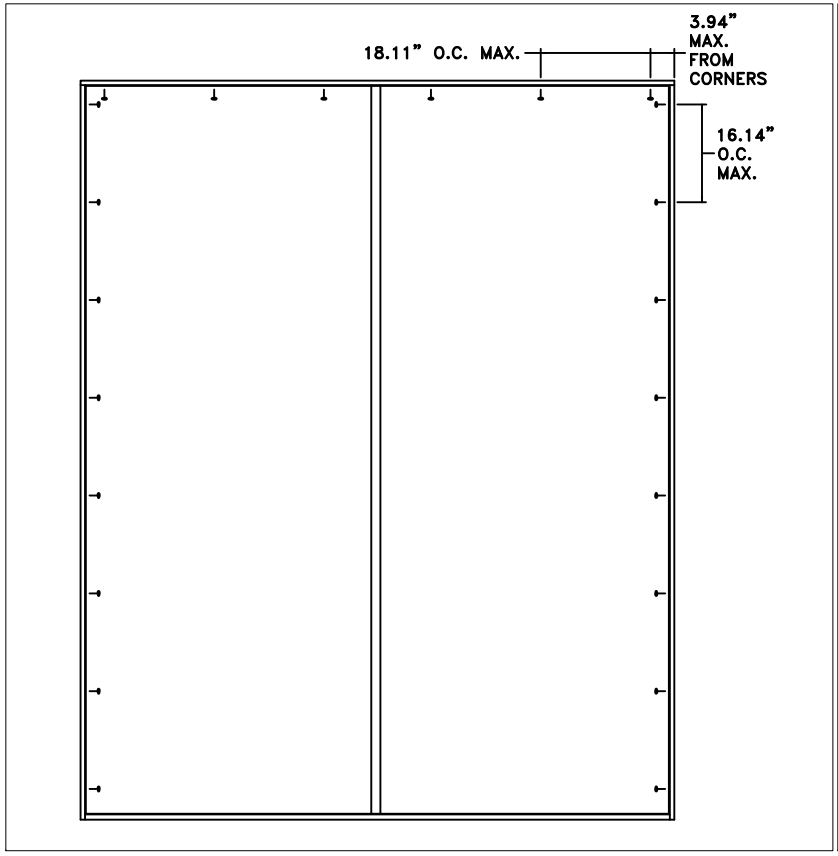

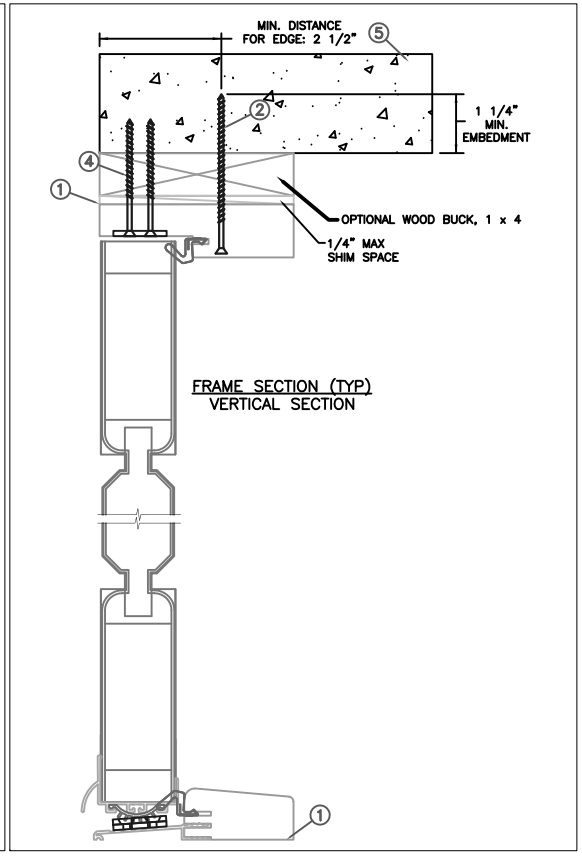

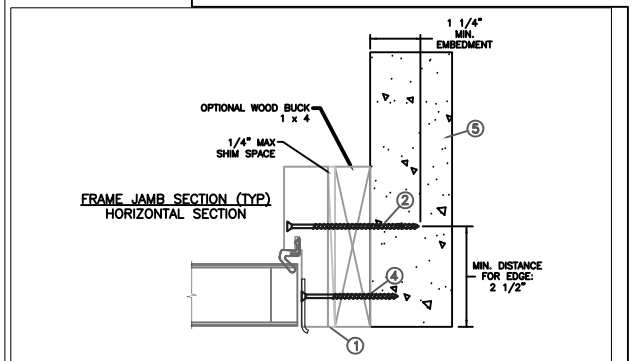

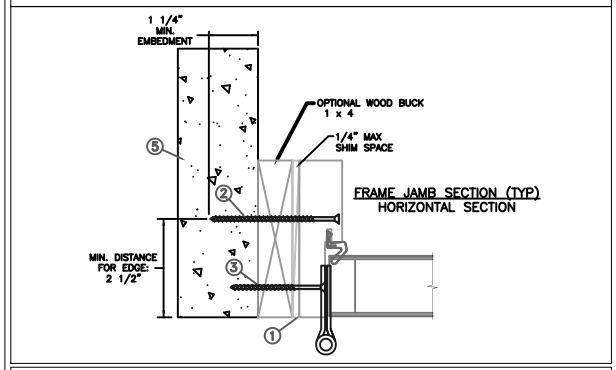

Max Frame	DP Rating	Impact
97 7/8" x 121 9/16"	+50/−65	NO

Installed Fastener Schedule:

1. Seal flange/frame to substrate. Sill shall be set on a continuous serpentine bead of structural grade silicone caulk (typ.).
2. Use 3/16" Tapcon or equivalent fasteners through frame with sufficient length to penetrate a minimum of 1 1/4" into concrete or masonry at each location with a 2 1/2" min. from edge distance. For concrete (min. fc = 3000 psi) or masonry substrate (min fc = 2000 psi) (CMU shall adhere to ASTM C90).
3. Install corrosion resistant 2-#12 X 3" tapcon screws through each hinge into rough opening.
4. Install corrosion resistant 2-#12 X 3" tapcon screws through each strike plate into rough opening.
5. Host structure (wood buck, stud framing and opening) to be designed and anchored to properly transfer all loads to the structure. The host structure is the responsibility of the architect or engineer of record for the project of installation.

General Notes:

1. The product shown herein is designed, tested and manufactured to comply with the wind load criteria of the adopted International Building Code (IBC), the International Residential Code (IRC), the Texas Revisions and the industry standard requirement for the stated conditions.
2. Buck, framing and masonry by others and is responsibility of architect or engineer of record.
3. All glazing shall conform to ASTM E1300.

This schedule addresses only the fasteners required to anchor the door to achieve the rated design pressure up to the size limitations noted. It is not intended as a guide to the installation process and does not address the sealing consideration that may arise in different wall conditions. For the complete installation procedure, see the instructions packaged with the door or go to www.jeld-wen.com.

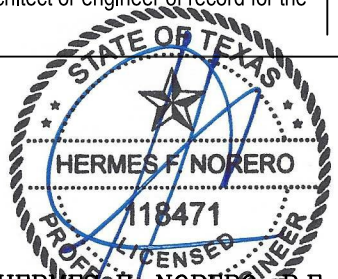

HERMES F. NORERO, P.E.
Texas No. 118471
398 East Dania Beach Blvd. Suite 338
Dania Beach, FL 33004

PROJECT ENGINEER: --	DATE: 06/11/2019	JELD-WEN	3737 Lakeport Blvd Klamath Falls, OR. 97601 Phone: (800) 535-3936
DRAWN BY: D. Vezo	SCALE: NTS		
CHECKED BY: J. Hawkins	TITLE: Aurora Outswing Non Impact Opaque Door		
APPROVED BY: D. Vezo			
PART/PROJECT No.: D014926			
IDENTIFIER No. 110-17-155-OS	PLANT NAME AND LOCATION: ----	CAD DWG. No.:	REV: 00 / SHEET 2 of 6

MASONRY STRAP INSTALLATION

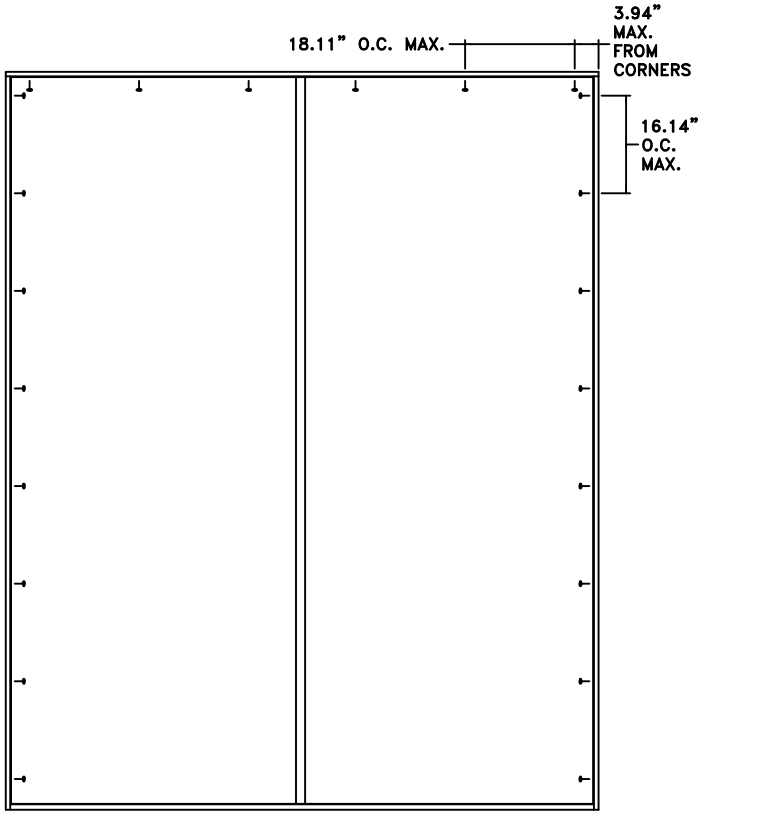

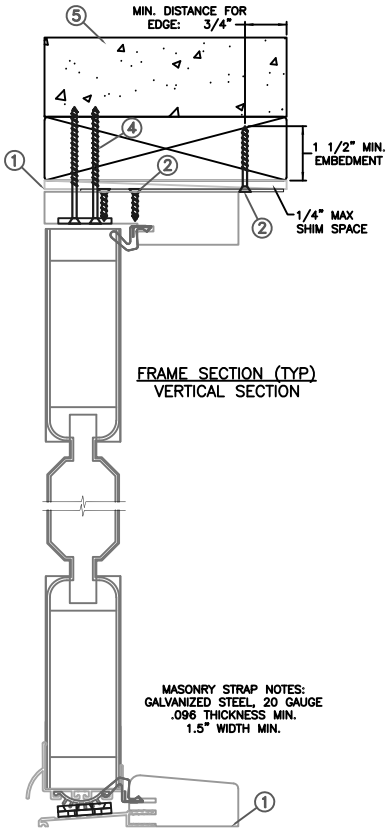

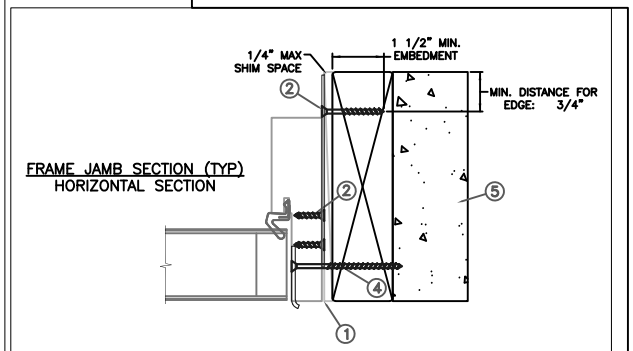

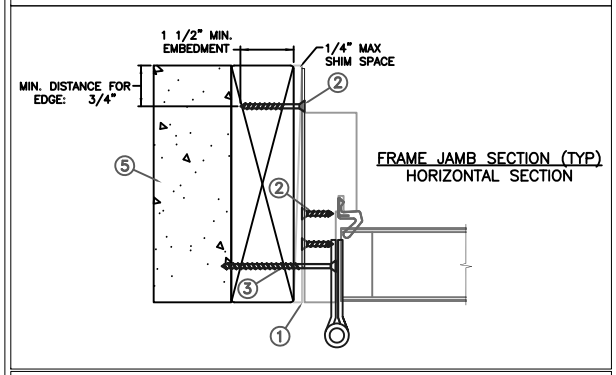

Max Frame	DP Rating	Impact
97 7/8" x 121 9/16"	+50/−65	NO

Installed Fastener Schedule:

1. Seal flange/frame to substrate. Sill shall be set on a continuous serpentine bead of structural grade silicone caulk (typ.).
2. Install masonry straps to wood frame using 2-#8 x 1/2" PH corrosion resistant fasteners no more then 3.94" from each corner and 16.14" o.c. along the jambs and head. Fasten straps to buck and secure with #8 x 1 1/2" PH fastener thru masonry strap into buck. Fasteners must be long enough to penetrate at least 1 1/2" into framing members. For concrete (min. fc = 3000 psi) or masonry substrate (min fc = 2000 psi) (CMU shall adhere to ASTM C90).
3. Install corrosion resistant 2-#12 X 3" screws through each hinge into rough opening.
4. Install corrosion resistant 2-#12 X 3" screws through each strike plate into rough opening.
5. Host structure (wood buck, stud framing and opening) to be designed and anchored to properly transfer all loads to the structure. The host structure is the responsibility of the architect or engineer of record for the project of installation.

This schedule addresses only the fasteners required to anchor the door to achieve the rated design pressure up to the size limitations noted. It is not intended as a guide to the installation process and does not address the sealing consideration that may arise in different wall conditions. For the complete installation procedure, see the instructions packaged with the door or go to www.jeld-wen.com.

General Notes:

1. The product shown herein is designed, tested and manufactured to comply with the wind load criteria of the adopted International Building Code (IBC), the International Residential Code (IRC), the Texas Revisions and the industry standard requirement for the stated conditions.
2. Buck, framing and masonry by others and is responsibility of architect or engineer of record.
3. All glazing shall conform to ASTM E1300.

HERMES F. NORERO, P.E.
Texas No. 118471
398 East Dania Beach Blvd. Suite 338
Dania Beach, FL 33004

PROJECT ENGINEER: --	DATE: 06/11/2019	JELD-WEN	3737 Lakeport Blvd Klamath Falls, OR. 97601 Phone: (800) 535-3936
DRAWN BY: D. Vezo	SCALE: NTS		
CHECKED BY: J. Hawkins	TITLE: Aurora Outswing Non Impact Opaque Door		
APPROVED BY: D. Vezo			
PART/PROJECT No.: D014926			
IDENTIFIER No. 110-17-155-OS	PLANT NAME AND LOCATION: ----	CAD DWG. No.:	REV: 00 / SHEET 3 of 6

MASONRY STRAP INSTALLATION

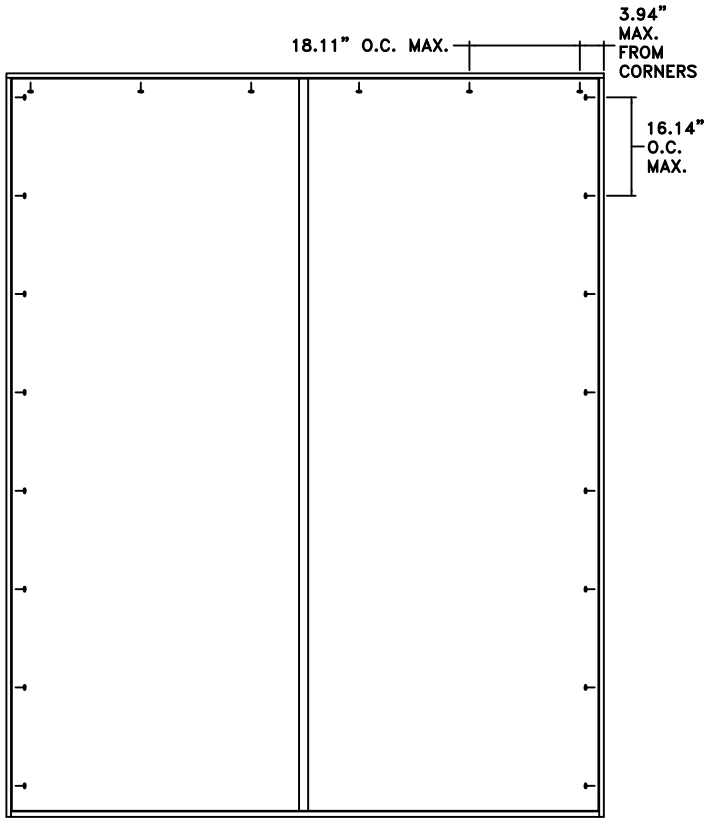

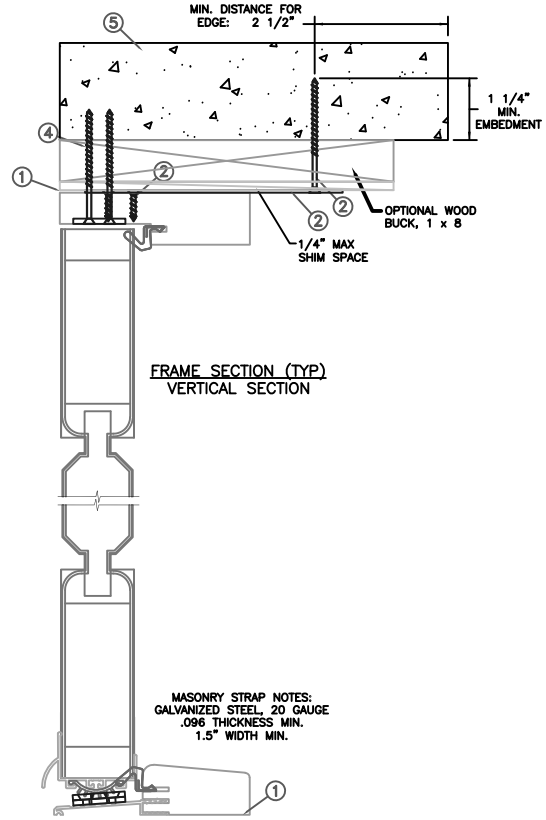

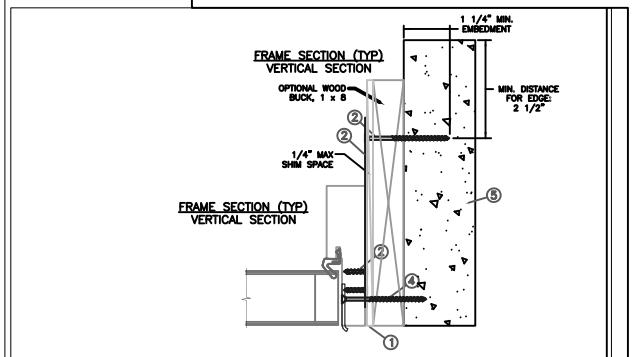

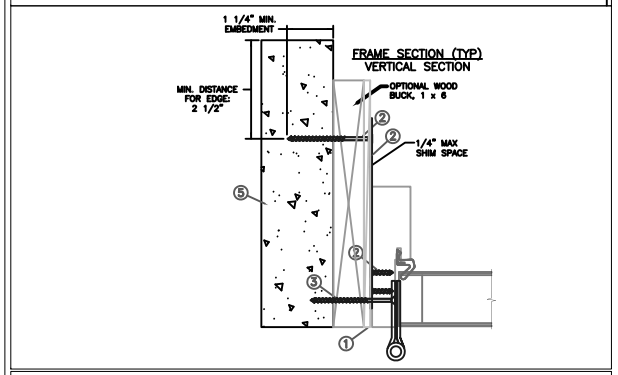

Max Frame	DP Rating	Impact
97 7/8" x 121 9/16"	+50/−65	NO

Installed Fastener Schedule:

1. Seal flange/frame to substrate. Sill shall be set on a continuous serpentine bead of structural grade silicone caulk (typ.).
2. Use 3/16" Tapcon or equivalent fasteners through strap with sufficient length to penetrate a minimum of 1 1/4" into concrete or masonry at each location with a 2 1/2" min. from edge distance. 2-#8 x 1/2" PH screws through the strap into frame. For concrete (min. fc = 3000 psi) or masonry substrate (min fc = 2000 psi) (CMU shall adhere to ASTM C90).
3. Install corrosion resistant 2-#12 X 3" tapcon screws through each hinge into rough opening.
4. Install corrosion resistant 2-#12 X 3" tapcon screws through each strike plate into rough opening.
5. Host structure (wood buck, stud framing and opening) to be designed and anchored to properly transfer all loads to the structure. The host structure is the responsibility of the architect or engineer of record for the project of installation.

This schedule addresses only the fasteners required to anchor the door to achieve the rated design pressure up to the size limitations noted. It is not intended as a guide to the installation process and does not address the sealing consideration that may arise in different wall conditions. For the complete installation procedure, see the instructions packaged with the door or go to www.jeld-wen.com.

General Notes:

1. The product shown herein is designed, tested and manufactured to comply with the wind load criteria of the adopted International Building Code (IBC), the International Residential Code (IRC), the Texas Revisions and the industry standard requirement for the stated conditions.
2. Buck, framing and masonry by others and is responsibility of architect or engineer of record.
3. All glazing shall conform to ASTM E1300.

HERMES F. NORERO, P.E.
Texas No. 118471
398 East Dania Beach Blvd. Suite 338
Dania Beach, FL 33004

PROJECT ENGINEER: --	DATE: 06/11/2019	JELD-WEN	3737 Lakeport Blvd Klamath Falls, OR. 97601 Phone: (800) 535-3936
DRAWN BY: D. Vezo	SCALE: NTS		
CHECKED BY: J. Hawkins	TITLE: Aurora Outswing Non Impact Opaque Door		
APPROVED BY: D. Vezo			
PART/PROJECT No.: D014926			
IDENTIFIER No. 110-17-155-OS	PLANT NAME AND LOCATION: ----	CAD DWG. No.:	REV: 00 / SHEET 4 of 6

MASONRY STRAP INSTALLATION

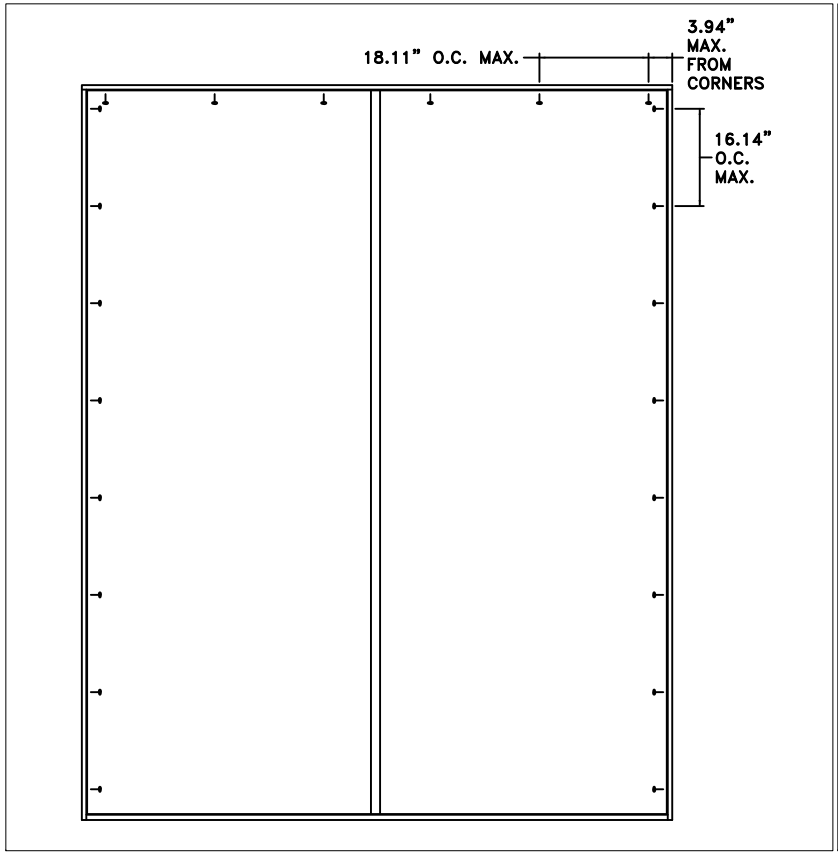

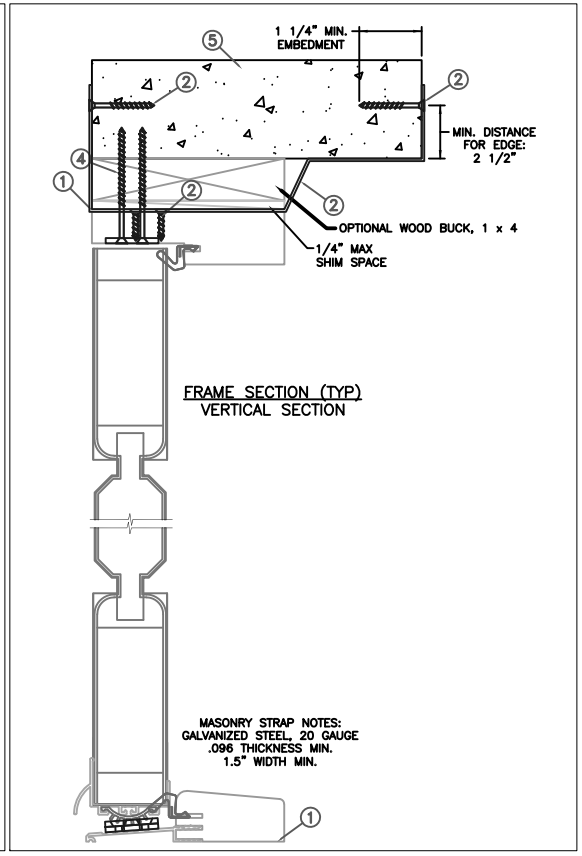

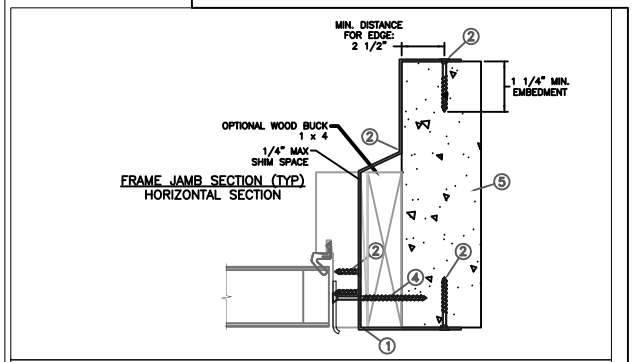

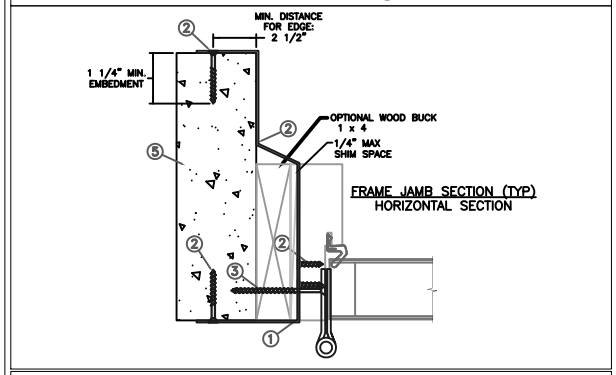

Max Frame	DP Rating	Impact
97 7/8" x 121 9/16"	+50/−65	NO

Installed Fastener Schedule:

1. Seal flange/frame to substrate. Sill shall be set on a continuous serpentine bead of structural grade silicone caulk (typ.).
2. Use 3/16" Tapcon or equivalent fasteners through the interior and exterior of the strap with sufficient length to penetrate a minimum of 1 1/4" into concrete or masonry at each location with a 2 1/2" min. from edge distance. 2-#8 x 1/2" PH screws through the strap into frame. For concrete (min. fc = 3000 psi) or masonry substrate (min fc = 2000 psi) (CMU shall adhere to ASTM C90).
3. Install corrosion resistant 2-#12 X 3" tapcon screws through each hinge into rough opening.
4. Install corrosion resistant 2-#12 X 3" tapcon screws through each strike plate into rough opening.
5. Host structure (wood buck, stud framing and opening) to be designed and anchored to properly transfer all loads to the structure. The host structure is the responsibility of the architect or engineer of record for the project of installation.

General Notes:

1. The product shown herein is designed, tested and manufactured to comply with the wind load criteria of the adopted International Building Code (IBC), the International Residential Code (IRC), the Texas Revisions and the industry standard requirement for the stated conditions.
2. Buck, framing and masonry by others and is responsibility of architect or engineer of record.
3. All glazing shall conform to ASTM E1300.

This schedule addresses only the fasteners required to anchor the door to achieve the rated design pressure up to the size limitations noted. It is not intended as a guide to the installation process and does not address the sealing consideration that may arise in different wall conditions. For the complete installation procedure, see the instructions packaged with the door or go to www.jeld-wen.com.

HERMES F. NORERO, P.E.
Texas No. 118471
398 East Dania Beach Blvd. Suite 338
Dania Beach, FL 33004

PROJECT ENGINEER: --	DATE: 06/11/2019	JELD-WEN	3737 Lakeport Blvd Klamath Falls, OR. 97601 Phone: (800) 535-3936
DRAWN BY: D. Vezo	SCALE: NTS		
CHECKED BY: J. Hawkins	TITLE: Aurora Outswing Non Impact Opaque Door		
APPROVED BY: D. Vezo			
PART/PROJECT No.: D014926			
IDENTIFIER No. 110-17-155-OS	PLANT NAME AND LOCATION: ----	CAD DWG. No.:	REV: 00 / SHEET 5 of 6

MASONRY STRAP INSTALLATION

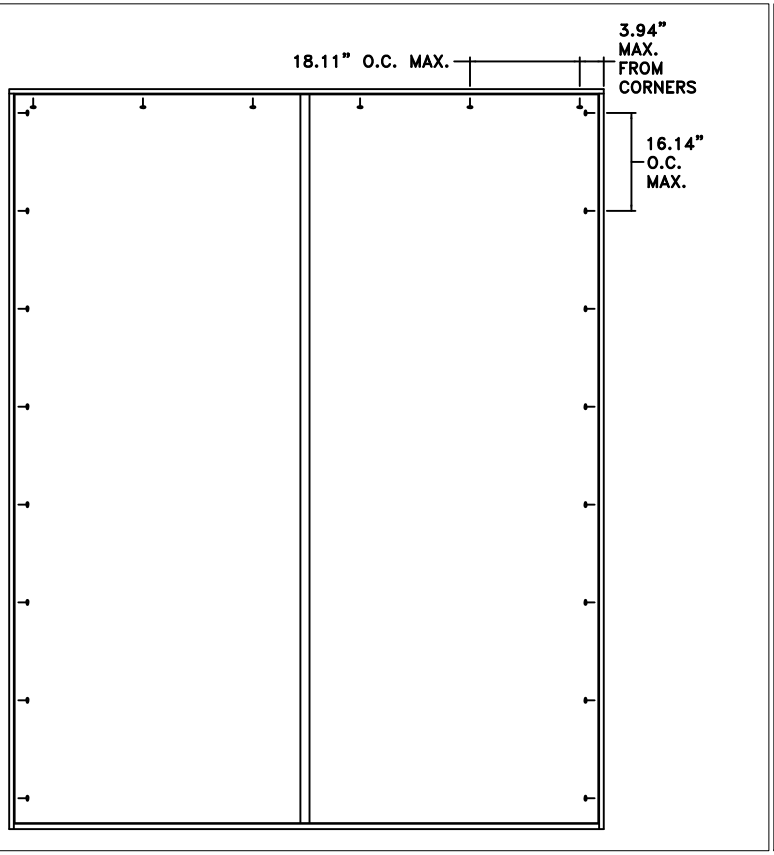

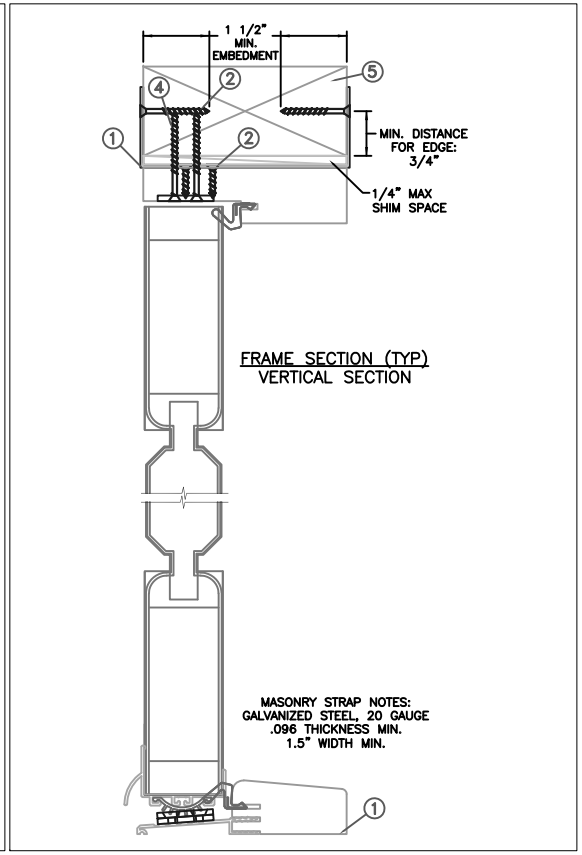

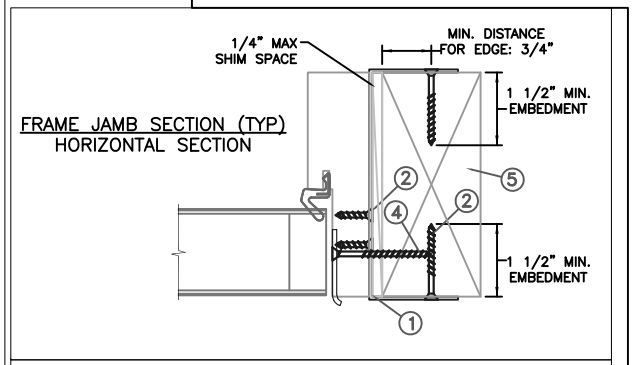

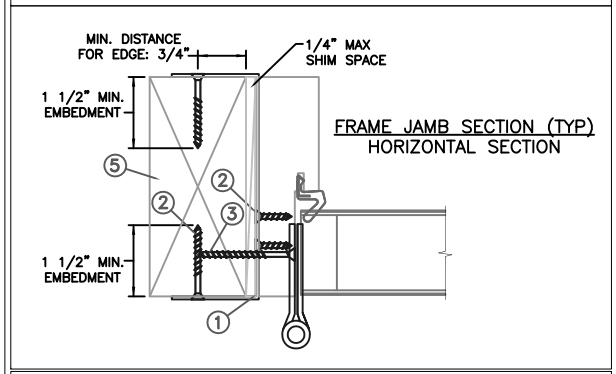

Max Frame	DP Rating	Impact
97 7/8" x 121 9/16"	+50/−65	NO

Installed Fastener Schedule:

1. Seal flange/frame to substrate. Sill shall be set on a continuous serpentine bead of structural grade silicone caulk (typ.).
2. Install masonry straps to wood frame using #8 corrosion resistant fasteners no more then 3.94" from each corner and 16.14" o.c. along the jambs and head. Bend straps around buck to the interior and exterior, and secure with #8 fastener thru masonry strap into buck. Fasteners must be long enough to penetrate at least 1 1/2" into framing members. Minimum specific gravity = (Min. S.G. = 0.42).
3. Install corrosion resistant 2-#12 X 3" screws through each hinge into rough opening.
4. Install corrosion resistant 2-#12 X 3" screws through each strike plate into rough opening.
5. Host structure (wood buck, stud framing and opening) to be designed and anchored to properly transfer all loads to the structure. The host structure is the responsibility of the architect or engineer of record for the project of installation.

General Notes:

1. The product shown herein is designed, tested and manufactured to comply with the wind load criteria of the adopted International Building Code (IBC), the International Residential Code (IRC), the Texas Revisions and the industry standard requirement for the stated conditions.
2. Buck, framing and masonry by others and is responsibility of architect or engineer of record.
3. All glazing shall conform to ASTM E1300.

This schedule addresses only the fasteners required to anchor the door to achieve the rated design pressure up to the size limitations noted. It is not intended as a guide to the installation process and does not address the sealing consideration that may arise in different wall conditions. For the complete installation procedure, see the instructions packaged with the door or go to www.jeld-wen.com.

HERMES F. NORERO, P.E.
Texas No. 118471
398 East Dania Beach Blvd. Suite 338
Dania Beach, FL 33004

PROJECT ENGINEER: --	DATE: 06/11/2019	JELD-WEN	3737 Lakeport Blvd Klamath Falls, OR. 97601 Phone: (800) 535-3936
DRAWN BY: D. Vezo	SCALE: NTS		
CHECKED BY: J. Hawkins	TITLE: Aurora Outswing Non Impact Opaque Door		
APPROVED BY: D. Vezo			
PART/PROJECT No.: D014926			
IDENTIFIER No. 110-17-155-OS	PLANT NAME AND LOCATION: ----	CAD DWG. No.:	REV: 00 / SHEET 6 of 6