YKK AP AMERICA

SERIES YHC 300 OG CURTAIN WALL SYSTEM - LMI
LOW PRESSURE - INSULATING GLAZING

INSTALLATION NOTES:

1. THE NUMBER OF INSTALLATION ANCHORS DEPICTED IS THE MINIMUM NUMBER OF ANCHORS TO BE USED FOR PRODUCT INSTALLATION.
2. INSTALL INDIVIDUAL ANCHORS WITHIN A TOLERANCE OF +/- 1/16 INCH OF THE DEPICTED LOCATION AS SPECIFIED. TOLERANCES ARE NOT CONSIDERED CUMULATIVE FROM ONE LOCATION TO THE NEXT.
3. MINIMUM EMBEDMENT AND EDGE DISTANCE EXCLUDE WALL FINISHES, INCLUDING BUT NOT LIMITED TO STUCCO, FOAM, BRICK VENEER, AND SIDING.
4. INSTALLATION ANCHORS AND ASSOCIATED HARDWARE MUST BE MADE OF CORROSION RESISTANT MATERIAL OR HAVE A CORROSION RESISTANT COATING.
5. INSTALLATION ANCHORS SHALL BE INSTALLED IN ACCORDANCE WITH ANCHOR MANUFACTURER'S INSTALLATION INSTRUCTIONS, AND ANCHORS SHALL NOT BE USED IN SUBSTRATES WITH STRENGTHS LESS THAN THE MINIMUM STRENGTH SPECIFIED BY THE ANCHOR MANUFACTURER.
6. INSTALLATION ANCHOR CAPACITIES FOR PRODUCTS HEREIN ARE BASED ON SUBSTRATE MATERIALS WITH PROPERTIES AS SPECIFIED IN ANCHOR OPTION TABLES OR IN DETAILS PROVIDED. PLEASE REFER TO THE TABLE OF CONTENTS FOR APPLICABLE ANCHOR SUBSTRATE REQUIREMENTS.

GENERAL NOTES:

1. THE PRODUCT SHOWN HEREIN IS DESIGNED AND MANUFACTURED TO COMPLY WITH THE 2006 IRC/IBC AND TEXAS REVISIONS AND HAS BEEN EVALUATED ACCORDING TO THE FOLLOWING:
   - TAS 201-94
   - TAS 202-94
   - TAS 203-94
2. ADEQUACY OF THE EXISTING STRUCTURAL CONCRETE/MASONRY AND STEEL AS A MAIN WIND FORCE RESISTING SYSTEM CAPABLE OF WITHSTANDING AND TRANSFERRING APPLIED PRODUCT LOADS TO THE FOUNDATION IS THE RESPONSIBILITY OF THE ENGINEER OR ARCHITECT OF RECORD FOR THE PROJECT OF INSTALLATION.
3. STEEL & CONCRETE/MASONRY (WHEN USED) SHALL BE DESIGNED AND ANCHORED TO PROPERLY TRANSFER ALL LOADS TO THE STRUCTURE. DESIGN AND INSTALLATION OF THE STRUCTURE IS THE RESPONSIBILITY OF THE ENGINEER OR ARCHITECT OF RECORD FOR THE PROJECT OF INSTALLATION.
4. THE INSTALLATION DETAILS DESCRIBED HEREIN ARE GENERIC AND MAY NOT REFLECT ACTUAL CONDITIONS FOR A SPECIFIC SITE. IF SITE CONDITIONS CAUSE INSTALLATION TO DEVIATE FROM THE REQUIREMENTS DETAILED HEREIN, A LICENSED ENGINEER OR ARCHITECT SHALL PREPARE SITE SPECIFIC DOCUMENTS FOR USE WITH THIS DOCUMENT IN ACCORDANCE WITH THE AUTHORITY HAVING JURISDICTION (AHJ).
5. APPROVED IMPACT PROTECTIVE SYSTEM **IS NOT REQUIRED** ON THIS PRODUCT IN AREAS REQUIRING IMPACT RESISTANCE.
6. FRAME MATERIAL: 6063-T5 & 6063-T6 ALUMINUM.
7. GLASS MEETS THE REQUIREMENTS OF ASTM E 1300-04 GLASS CHARTS.

MISSILE IMPACT RATING
LARGE MISSILE IMPACT

TABLE OF CONTENTS

SHEET	REVISION	SHEET DESCRIPTION
1	-	INSTALLATION & GENERAL NOTES
2	-	ELEVATION
3	-	VERTICAL SECTIONS
4	-	HORIZONTAL SECTIONS
5	-	CW-DOOR DETAILS
6	-	IS & OS CORNER DETAILS WITH BREAK METAL
7	-	OS CORNER DETAILS
8	-	GLASS CAPACITY CHARTS
9	-	SINGLE SPAN VERTICAL MULLION CAPACITIES
10	-	MULTI SPAN VERTICAL MULLION CAPACITY
11	-	HORIZONTAL MULLION CAPACITIES
12	-	T & F ANCHOR CONFIGURATIONS (1)
13	-	T & F ANCHOR CONFIGURATIONS (2)
14	-	T & F ANCHOR CONFIGURATIONS (3)
15	-	S ANCHOR CONFIGURATIONS
16	-	F, T, & S ANCHOR TYPES, REQUIREMENTS & DIAGRAMS
17	-	SINGLE SPAN & MULTI SPAN T & F ANCHOR CAPACITIES
18	-	SINGLE SPAN & MULTI SPAN F ANCHOR CAPACITIES DOOR JAMB-SIDELITE
19	-	SINGLE SPAN & MULTI SPAN S ANCHOR CAPACITIES
20	-	WIND LOAD ANCHOR & SPLICE DETAILS
21	-	DEAD LOAD ANCHOR DETAILS - WELDED
22	-	WIND LOAD ANCHOR DETAILS - BOLTED TO STEEL
23	-	DEAD LOAD ANCHOR DETAILS - BOLTED TO STEEL
24	-	WIND LOAD ANCHOR DETAILS - ANCHOR TO CONCRETE
25	-	DEAD LOAD ANCHOR DETAILS - ANCHOR TO CONRETE
26	-	WL & DL CORNER ANCHOR DETAILS - ANCHOR TO CONC.
27	-	HALFEN EMBED DETAILS
28	-	BILL OF MATERIALS & COMPONENTS
29	-	COMPONENTS (1)
30	-	COMPONENTS (2)

Digitally signed by Hermes F Norero, P.E.
Reason: I am approving this document
Date: 2015.12.13 17:25:55 -05'00'

YKK AP AMERICA
1229 HWY 441 BYPASS
DUBLIN, GEORGIA 31021
PH: (478) 277-1955 FX: (678) 838-6001

TITLE: SERIES YHC 300 OG I.G. LOW PRESSURE CURTAIN WALL
INSTALLATION & GENERAL NOTES

PREPARED BY:
BUILDING DROPS, INC.
398 E. DANIA BEACH BLVD. #338
DANIA BEACH, FL 33004
PH: (954) 399-8478 FX: (954) 744-4738

REVISIONS

NO.	DESCRIPTION	BY	DATE

STATE OF TEXAS
HERMES F. NORERO
118471
PROFESSIONAL ENGINEER

DATE: 09.18.14
DWN BY: SM
CHK BY: MSS
SCALE: NTS

DWG #: YKK044

SHEET: 1 OF 30

NOTE:

1) CURTAIN WALL SYSTEM MAY BE USED WITH APPROVED DOORS & STOREFRONTS BY YKK AP UNDER SEPARATE APPROVAL.

2) ELEVATION SHOWN IS FOR DIAGRAMMATIC PURPOSES ONLY. VARIOUS CONFIGURATIONS ARE POSSIBLE USING THIS APPROVAL AND DESIGN PRESSURE CHARTS WITHIN INCLUDING SINGLE SPAN CW WITH IS & OS CORNERS.

3) REFER TO SHEETS 12-19 FOR F, T, & S CLIP ANCHOR DETAILS, REQUIREMENTS, AND CAPACITIES.

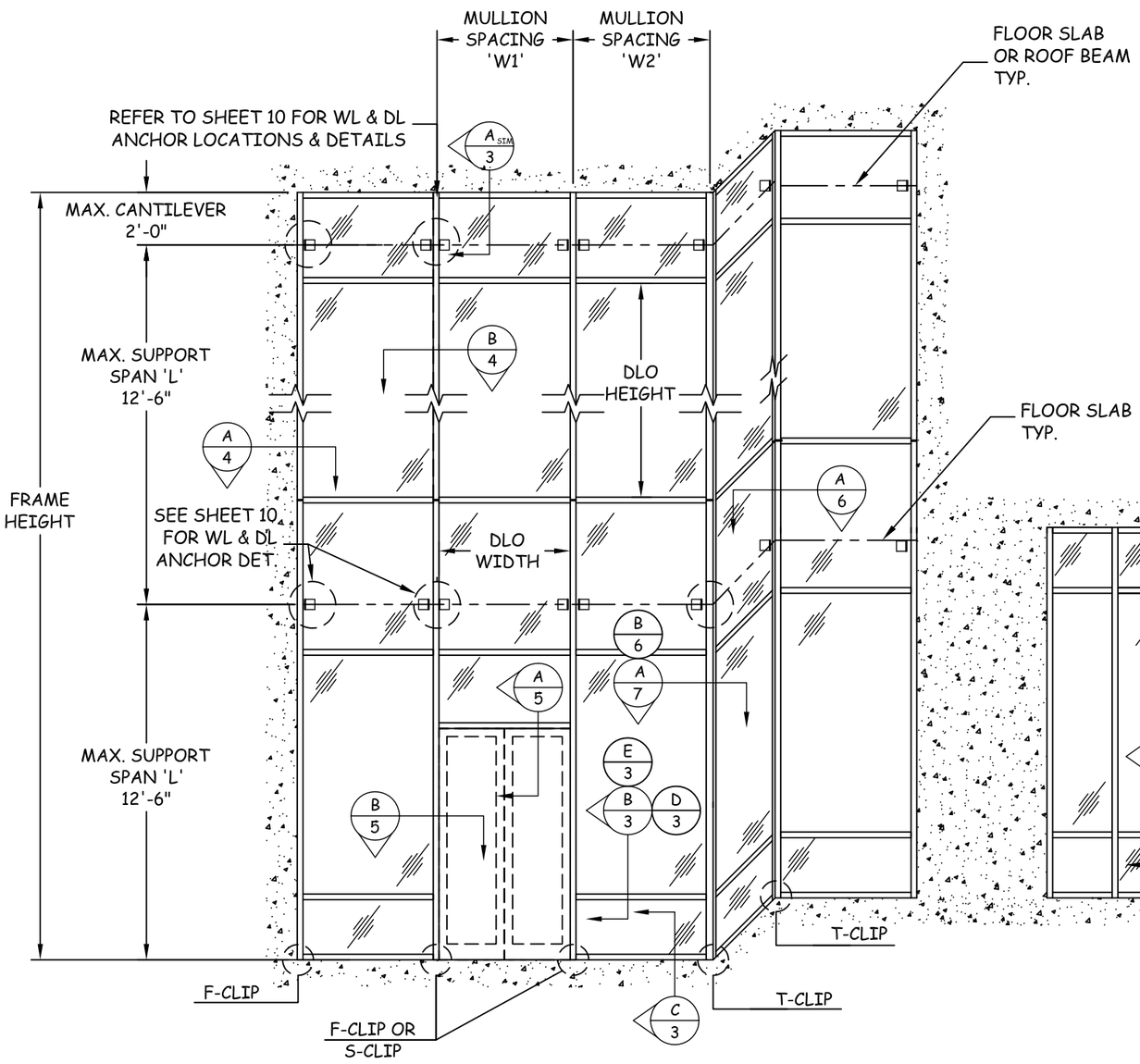

ELEVATION
TWIN-SPAN TYP.

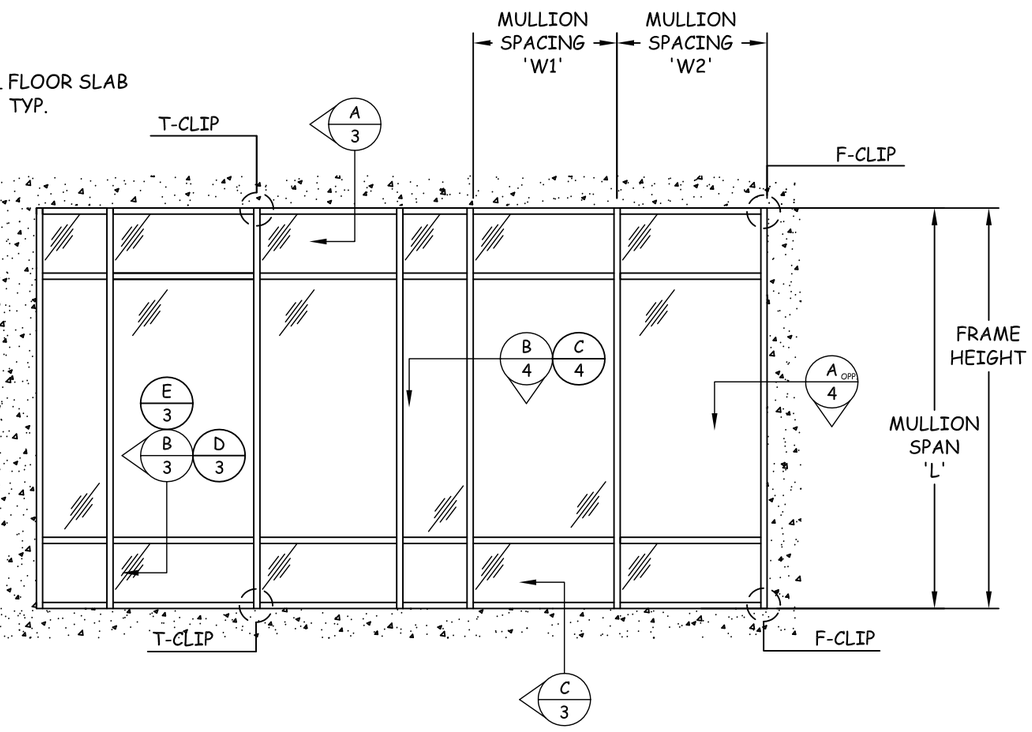

ELEVATION
SINGLE-SPAN TYP.

YKK AP AMERICA
1229 HWY 441 BYPASS
DUBLIN, GEORGIA 31021
PH: (478) 277-1955 FX: (678) 838-6001

TITLE: SERIES YHC 300 OG I.G. LOW PRESSURE CURTAIN WALL ELEVATION

PREPARED BY:
BUILDING DROPS, INC.
398 E. DANIA BEACH BLVD. #338
DANIA BEACH, FL 33004
PH: (954) 399-8478 FX: (954) 744-4738

REVISIONS

NO.	DESCRIPTION	BY	DATE

STATE OF TEXAS
HERMES F. NORERO
118471
PROFESSIONAL ENGINEER

DATE: 09.18.14
DWN BY: SM
CHK BY: MSS
SCALE: NTS

DWG #: YKK044

SHEET: 2 OF 30

HORIZONTAL MEMBER NOTES:

1. PRESSURE PLATES (ITEMS #2 & 3) SHALL UTILIZE THREE (3) 5/16" DIA. WEEP HOLES, 3" FROM EA. END & ONE AT CENTER.
2. COVER CAPS (ITEM #4) SHALL UTILIZE TWO (2) 5/16" DIA. WEEP HOLES, AT 1/3 SPAN LENGTH FROM ENDS.
3. REFER TO F, T, & S INSTALLATION LAYOUTS & DETAILS FOR ANCHOR REQUIREMENTS AND CAPACITY, SHEETS 12 - 19.

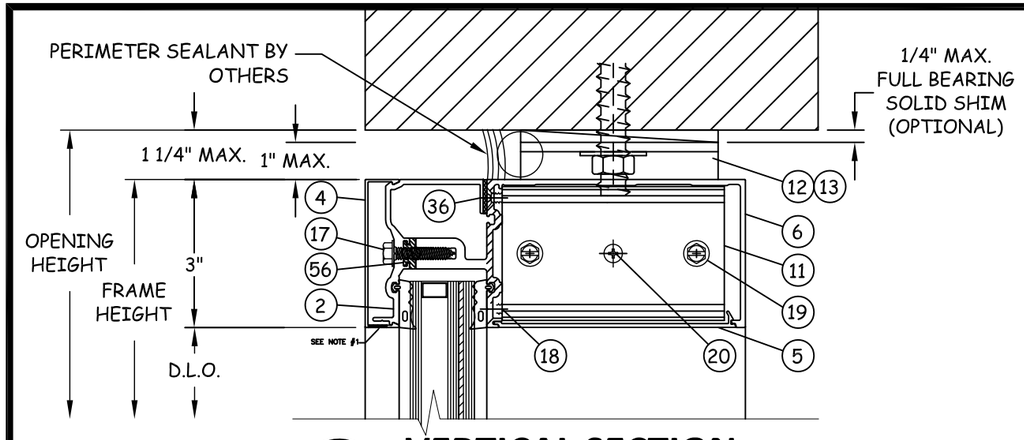

A/3 **VERTICAL SECTION**
HEAD

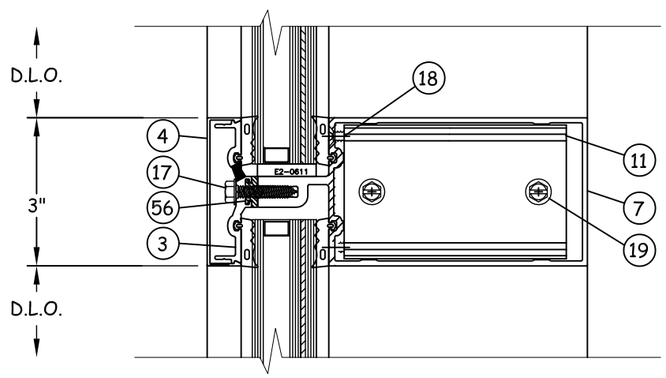

B/3 **VERTICAL SECTION**
HORIZONTAL MULLION
STANDARD

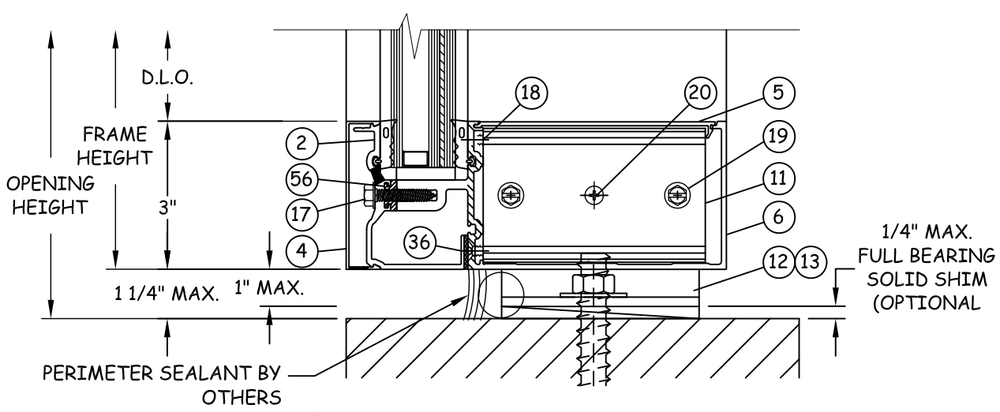

C/3 **VERTICAL SECTION**
SILL

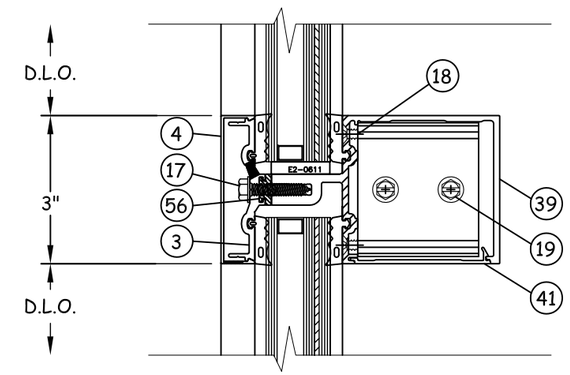

D/3 **VERTICAL SECTION**
HORIZONTAL MULLION
LIGHT DUTY

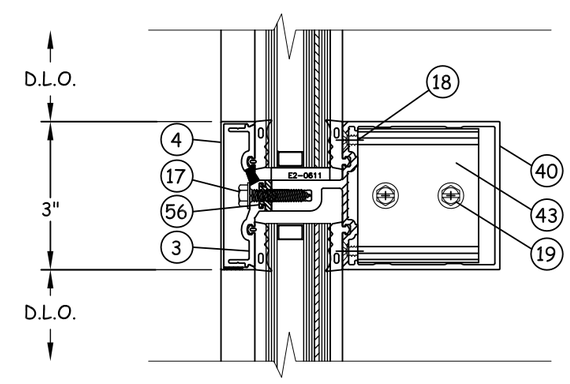

E/3 **VERTICAL SECTION**
HORIZONTAL MULLION
LIGHT DUTY

YKK AP AMERICA
1229 HWY 441 BYPASS
DUBLIN, GEORGIA 31021
PH: (478) 277-1955 FX: (678) 838-6001

TITLE: SERIES YHC 300 OG I.G. LOW PRESSURE CURTAIN WALL
VERTICAL SECTIONS

PREPARED BY:
BUILDING DROPS, INC.
398 E. DANIA BEACH BLVD. #338
DANIA BEACH, FL 33004
PH: (954) 399-8478 FX: (954) 744-4738

REVISIONS

NO.	DESCRIPTION	BY	DATE

STATE OF TEXAS
HERMES F. NORERO
118471
PROFESSIONAL ENGINEER

DATE: 09.18.14	DWN BY: SM	CHK BY: MSS	SCALE: NTS

DWG #: YKK044

SHEET: 3 OF 30

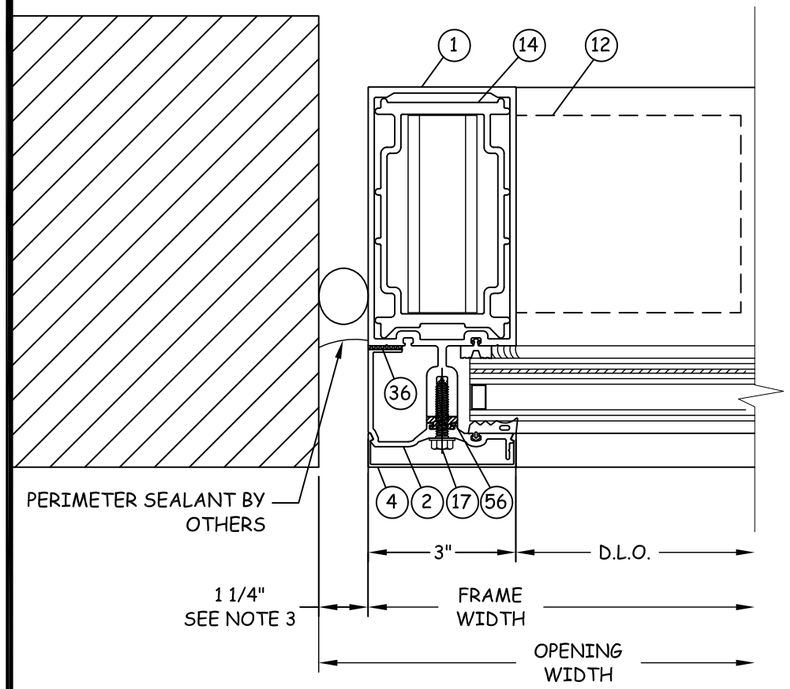

A/4 HORIZONTAL SECTION

JAMB

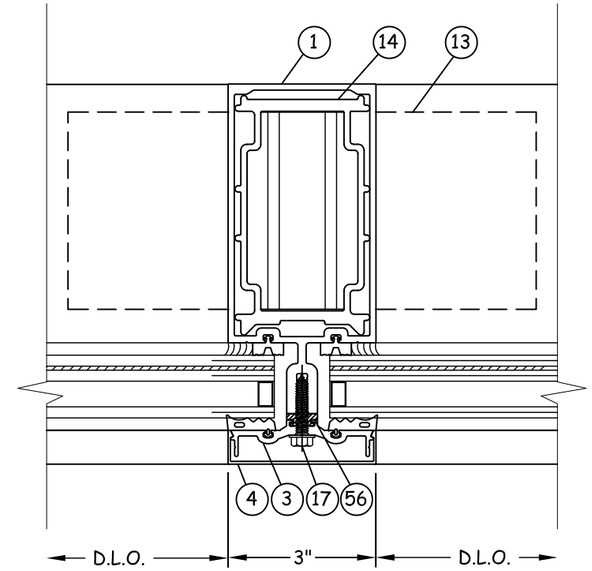

B/4 HORIZONTAL SECTION

VERTICAL MULLION
NON-REINFORCED

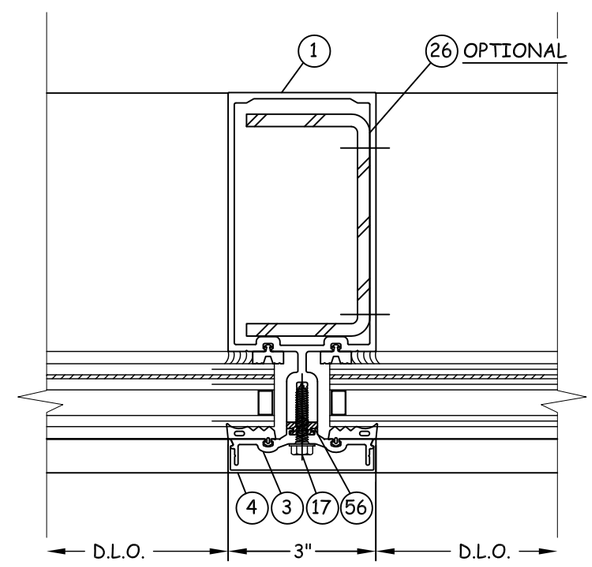

C/4 HORIZONTAL SECTION

VERTICAL MULLION
STEEL REINFORCED

VERTICAL MEMBER NOTES:

1. ANCHOR SLEEVE (ITEM #14) SHALL BE UTILIZED IN MINIMUM 3" LENGTHS AT TOP & BOTTOM OF VERTICAL MEMBERS WHERE F, T, AND/OR S ANCHORS ARE USED.
2. REFER TO F, T, & S INSTALLATION LAYOUTS & DETAILS FOR ANCHOR REQUIREMENTS AND CAPACITY, SHEETS 12 - 19.
3. JOINT AT JAMBS IS NON-STRUCTURAL AND SHALL BE SUFFICIENT TO ALLOW PROPER WEATHERPROOFING. LARGER GAP SPACE FOR SEALING JOINT MAY BE UTILIZED SUCH THAT EVIDENCE IS SUBMITTED IN ACCORDANCE WITH SEALANT PRODUCT MANUFACTURER'S GUIDELINES & RECOMMENDATION AND SHALL BE REVIEWED BY THE AUTHORITY HAVING JURISDICTION.

YKK AP AMERICA
1229 HWY 441 BYPASS
DUBLIN, GEORGIA 31021
PH: (478) 277-1955 FX: (678) 838-6001

TITLE: SERIES YHC 300 OG I.G. LOW PRESSURE CURTAIN WALL
HORIZONTAL SECTIONS

PREPARED BY:
BUILDING DROPS, INC.
398 E. DANIA BEACH BLVD. #338
DANIA BEACH, FL 33004
PH: (954) 399-8478 FX: (954) 744-4738

REVISIONS

NO.	DESCRIPTION	BY	DATE

STATE OF TEXAS
HERMES F. NORERO
118471
PROFESSIONAL ENGINEER

DATE: 09.18.14	DWN BY: SM	CHK BY: MSS	SCALE: NTS

DWG #: YKK044

SHEET: 4 OF 30

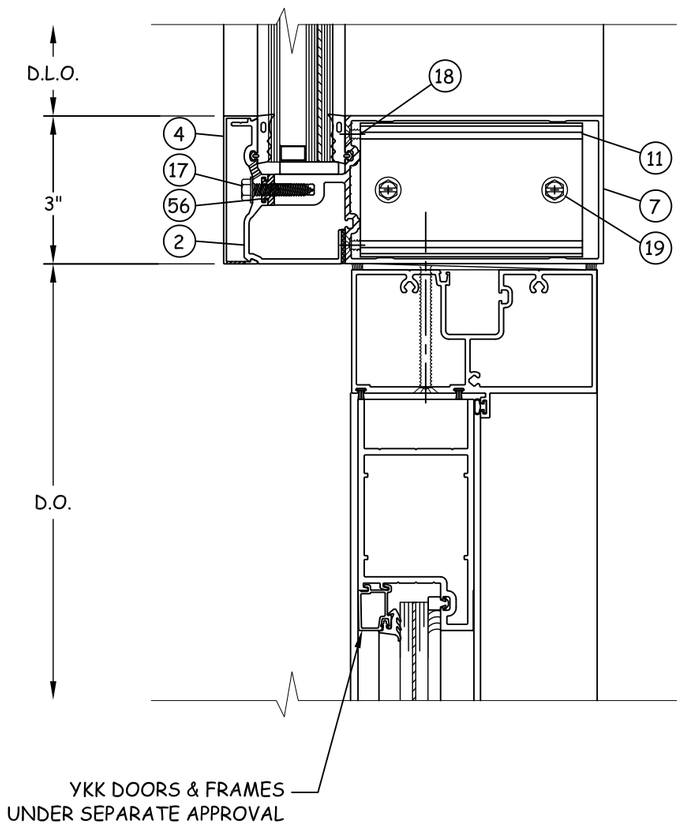

A/5 VERTICAL SECTION

TRANSOM
AT DOOR

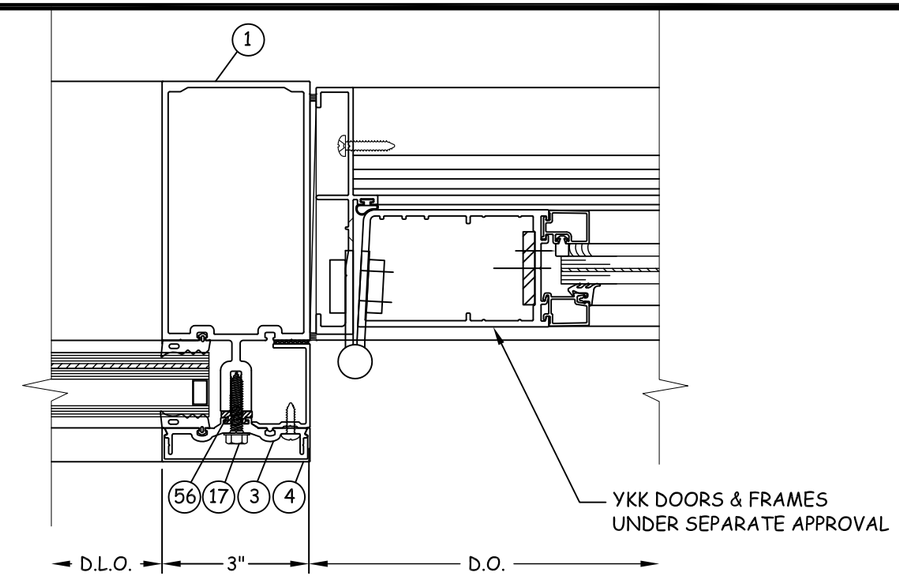

B/5 HORIZONTAL SECTION

VERTICAL MULLION
DOOR JAMB

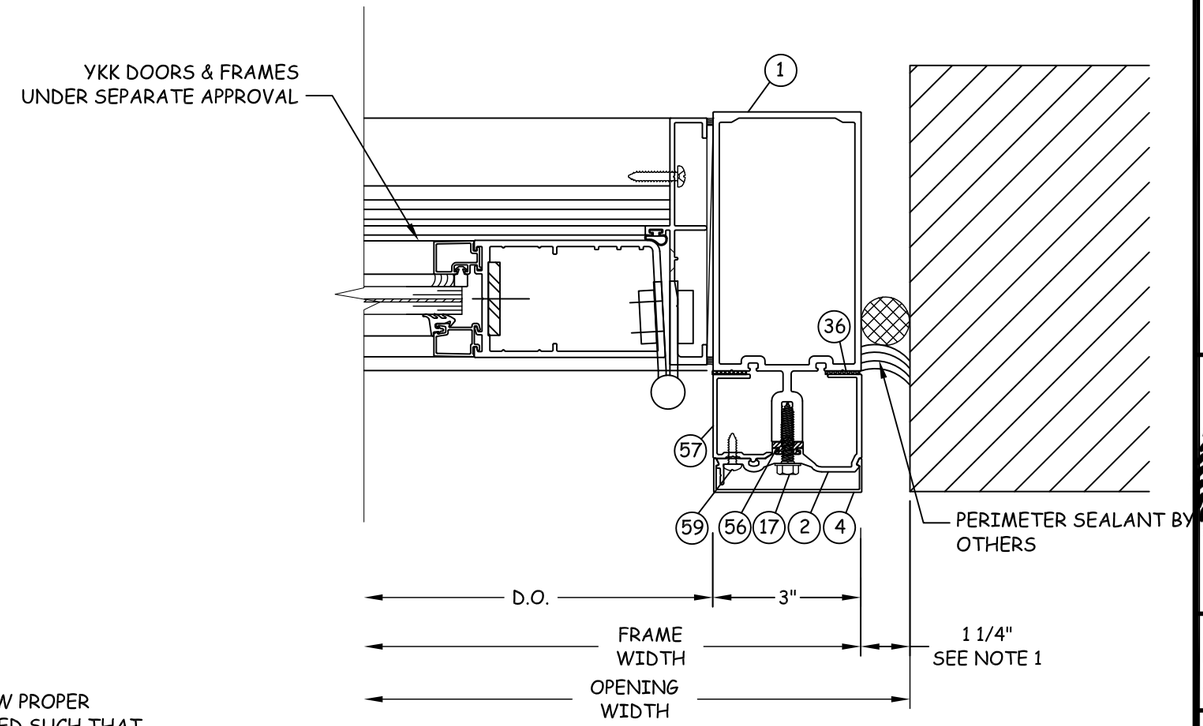

C/5 HORIZONTAL SECTION

JAMB
DOOR JAMB

VERTICAL MEMBER NOTES:

1. JOINT AT JAMBS IS NON-STRUCTURAL AND SHALL BE SUFFICIENT TO ALLOW PROPER WEATHERPROOFING. LARGER GAP SPACE FOR SEALING JOINT MAY BE UTILIZED SUCH THAT EVIDENCE IS SUBMITTED IN ACCORDANCE WITH SEALANT PRODUCT MANUFACTURER'S GUIDELINES & RECOMMENDATION AND SHALL BE REVIEWED BY THE AUTHORITY HAVING JURISDICTION.

YKK AP AMERICA
1229 HWY 441 BYPASS
DUBLIN, GEORGIA 31021
PH: (478) 277-1955 FX: (678) 838-6001

TITLE: SERIES YHC 300 OG I.G.
LOW PRESSURE CURTAIN WALL
CW-DOOR DETAILS

PREPARED BY:
BUILDING DROPS, INC.
398 E. DANIA BEACH BLVD. #338
DANIA BEACH, FL 33004
PH: (954) 399-8478 FX: (954) 744-4738

REVISIONS

NO.	DESCRIPTION	BY	DATE

STATE OF TEXAS
HERMES F. NORERO
118471
PROFESSIONAL ENGINEER

DATE: 09.18.14	DWN BY: SM	CHK BY: MSS	SCALE: NTS

DWG #: YKK044

SHEET: 5 OF 30

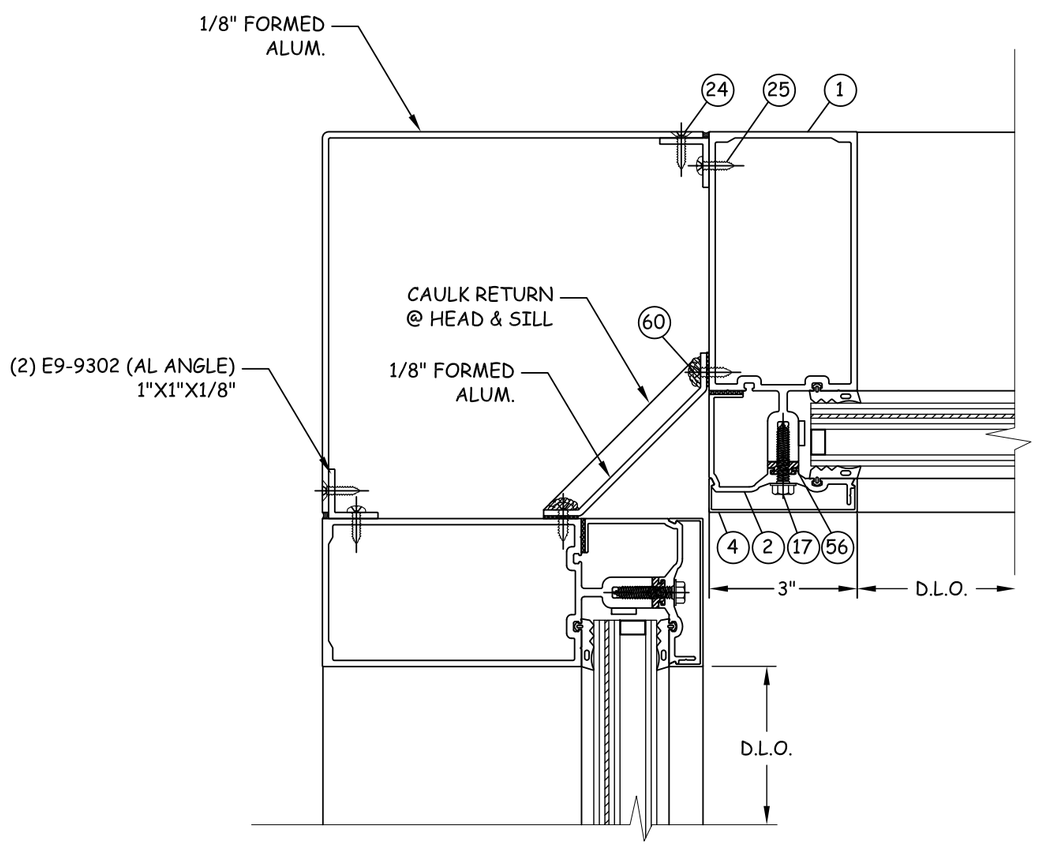

A/6 HORIZONTAL SECTION

INSIDE CORNER
WITH BREAK METAL

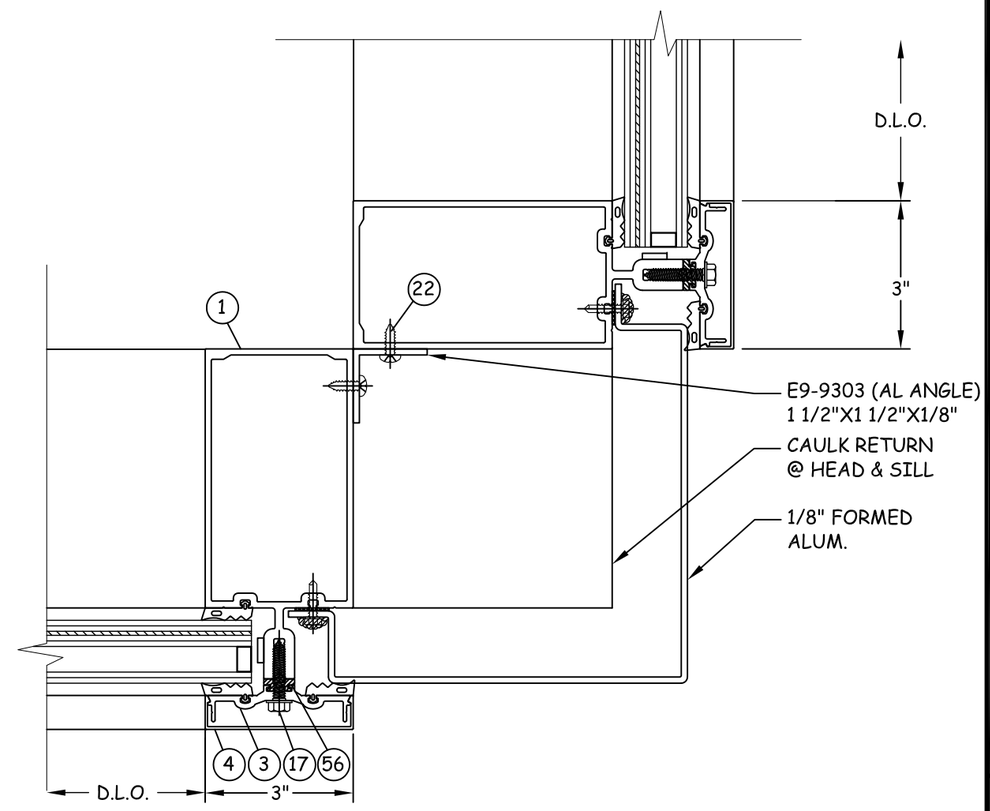

B/6 HORIZONTAL SECTION

ALTERNATE OUTSIDE CORNER
WITH BREAK METAL

YKK AP AMERICA
1229 HWY 441 BYPASS
DUBLIN, GEORGIA 31021
PH: (478) 277-1955 FX: (678) 838-6001

TITLE: SERIES YHC 300 OG I.G. LOW PRESSURE CURTAIN WALL IS & OS CORNER DETAILS WITH BREAK METAL

PREPARED BY:
BUILDING DROPS, INC.
398 E. DANIA BEACH BLVD. #338
DANIA BEACH, FL 33004
PH: (954) 399-8478 FX: (954) 744-4738

REVISIONS

NO.	DESCRIPTION	BY	DATE

STATE OF TEXAS
HERMES F. NORERO
118471
PROFESSIONAL ENGINEER

DATE: 09.18.14
DWN BY: SM
CHK BY: MSS
SCALE: NTS

DWG #: YKK044

SHEET: 6 OF 30

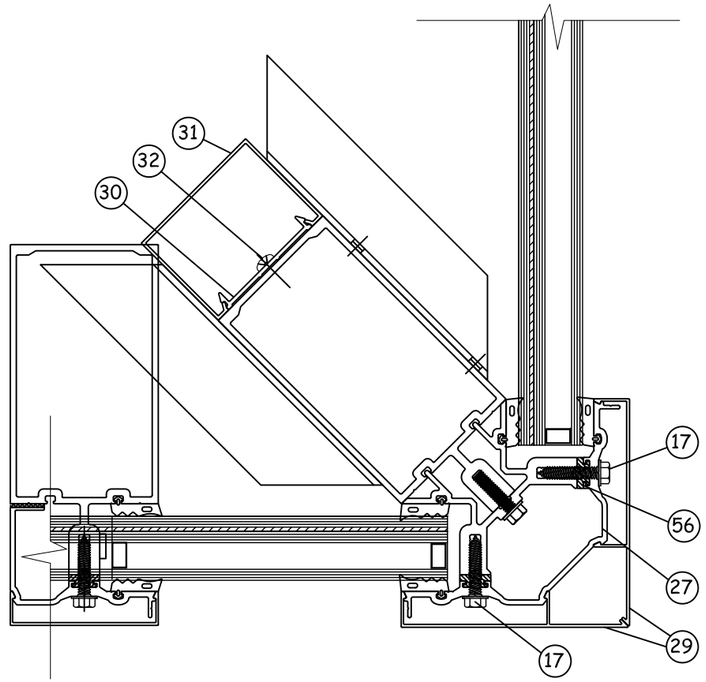

A/7 HORIZONTAL SECTION

OUTSIDE CORNER

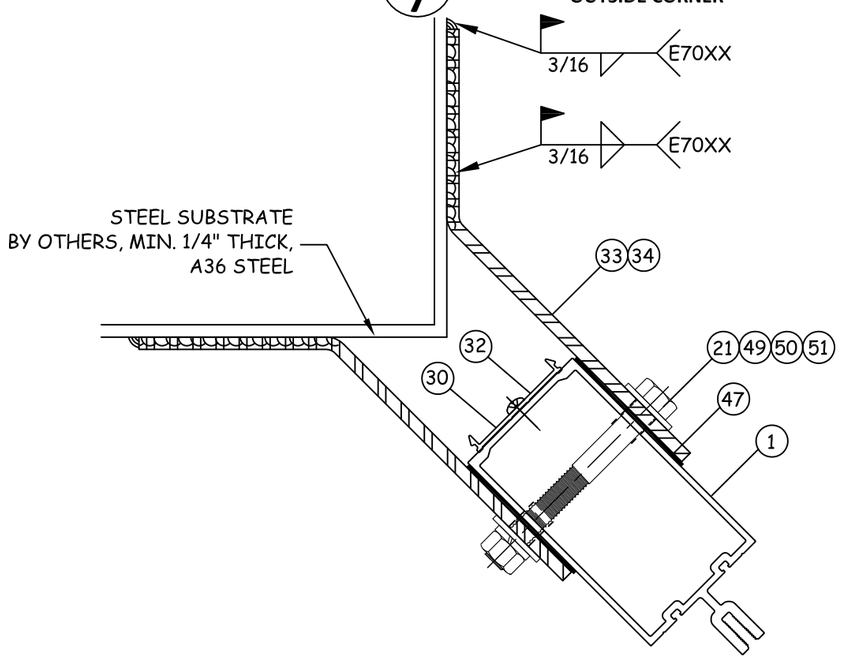

B/7 HORIZONTAL SECTION

OUTSIDE CORNER
WL OR DL ANCHOR

SEE ALTERNATE SHEAR BLOCK ASSEMBLY DETAILS FOR STANDARD OS CORNER CONSTRUCTION

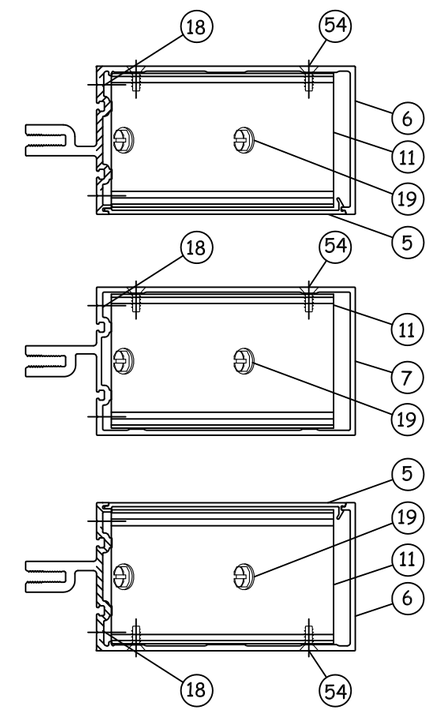

ATTACHMENT OF HORIZONTALS AT 90 DEGREE OUTSIDE CORNER

WL OR DL ANCHOR CAPACITY	
MAX. SPAN 'L'	MAX. DESIGN PRESSURE
150"	+/- 65 PSF

DEAD & WIND LOAD ANCHOR NOTES:

1. DEAD LOAD ANCHORS HAVE BEEN EVALUATED TO THE FOLLOWING:
   - DL = 1,650 LBS (UNFACTORED) @ DOUBLE ANGLE SUPPORTS
   - DL SHALL BE DETERMINED BY ENGINEER OF RECORD.

YKK AP AMERICA
1229 HWY 441 BYPASS
DUBLIN, GEORGIA 31021
PH: (478) 277-1955 FX: (678) 838-6001

TITLE: SERIES YHC 300 OG I.G. LOW PRESSURE CURTAIN WALL
OUTSIDE CORNER DETAILS

PREPARED BY:
BUILDING DROPS, INC.
398 E. DANIA BEACH BLVD. #338
DANIA BEACH, FL 33004
PH: (954) 399-8478 FX: (954) 744-4738

REVISIONS

NO.	DESCRIPTION	BY	DATE

STATE OF TEXAS
HERMES F. NORERO
118471
PROFESSIONAL ENGINEER

DATE: 09.18.14
DWN BY: SM
CHK BY: MSS
SCALE: NTS

DWG #: YKK044

SHEET: 7 OF 30

GLASS CAPACITY CHARTS

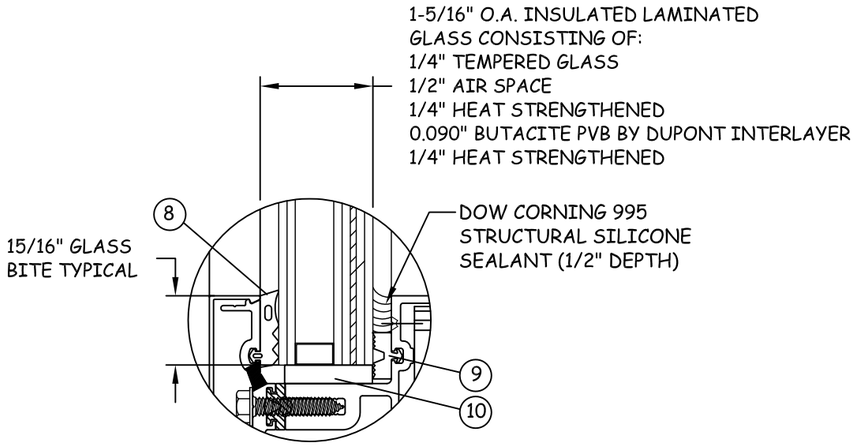

GLAZING OPTION A

WET GLAZED

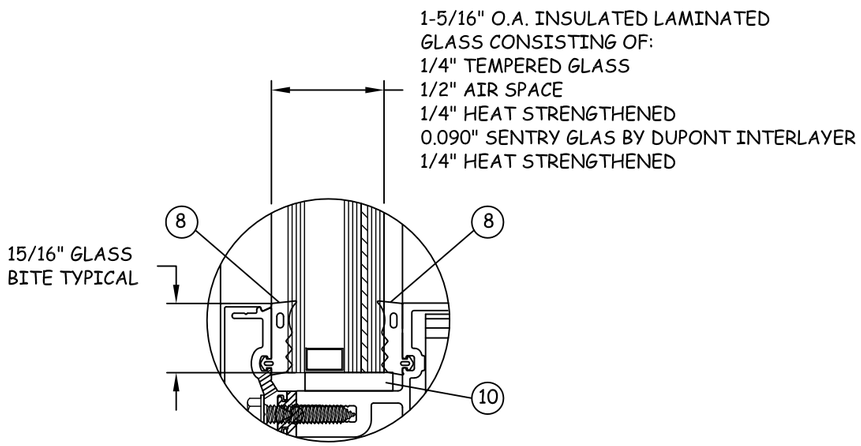

GLAZING OPTION B

DRY GLAZED

DAYLIGHT OPENING		GLASS TYPE DESIGN PRESSURES (PSF)			
MAX. 'A' (IN.)	MAX. 'B' (IN.)	A		B	
		+	-	+	-
30	60	65.0	65.0	65.0	65.0
	66	65.0	65.0	65.0	65.0
	72	65.0	65.0	65.0	65.0
	78	65.0	65.0	65.0	65.0
	84	65.0	65.0	65.0	65.0
	90	65.0	65.0	65.0	65.0
	96	65.0	65.0	65.0	65.0
	102	65.0	65.0	65.0	65.0
	108	65.0	65.0	65.0	65.0
	114	65.0	65.0	65.0	65.0
	120	65.0	65.0	65.0	65.0
36	60	65.0	65.0	65.0	65.0
	66	65.0	65.0	65.0	65.0
	72	65.0	65.0	65.0	65.0
	78	65.0	65.0	65.0	65.0
	84	65.0	65.0	65.0	65.0
	90	65.0	65.0	65.0	65.0
	96	65.0	65.0	65.0	65.0
	102	65.0	65.0	65.0	65.0
	108	65.0	65.0	65.0	65.0
	114	65.0	65.0	65.0	65.0
	120	-	-	65.0	65.0
42	60	65.0	65.0	65.0	65.0
	66	65.0	65.0	65.0	65.0
	72	65.0	65.0	65.0	65.0
	78	65.0	65.0	65.0	65.0
	84	65.0	65.0	65.0	65.0
	90	65.0	65.0	65.0	65.0
	96	65.0	65.0	65.0	65.0
	102	-	-	65.0	65.0
	108	-	-	65.0	65.0
	114	-	-	65.0	65.0
	120	-	-	65.0	65.0

DAYLIGHT OPENING		GLASS TYPE DESIGN PRESSURES (PSF)			
MAX. 'A' (IN.)	MAX. 'B' (IN.)	A		B	
		+	-	+	-
48	60	60.9	60.9	65.0	65.0
	66	60.9	60.9	65.0	65.0
	72	60.9	60.9	65.0	65.0
	78	60.9	60.9	65.0	65.0
	84	60.9	60.9	65.0	65.0
	90	-	-	65.0	65.0
	96	-	-	65.0	65.0
	102	-	-	65.0	65.0
	108	-	-	65.0	65.0
54	60	54.2	54.2	65.0	65.0
	66	54.2	54.2	65.0	65.0
	72	54.2	54.2	65.0	65.0
	78	54.2	54.2	65.0	65.0
	84	-	-	65.0	65.0
	90	-	-	65.0	65.0
	96	-	-	65.0	65.0
60	60	48.8	48.8	65.0	65.0
	66	48.8	48.8	65.0	65.0
	72	-	-	65.0	65.0
	78	-	-	65.0	65.0
	84	-	-	65.0	65.0
66	60	53.6	53.6	65.0	65.0
	66	-	-	65.0	65.0
	72	-	-	65.0	65.0
	78	-	-	65.0	65.0
74	60	-	-	65.0	65.0
	66	-	-	65.0	65.0
	72	-	-	65.0	65.0

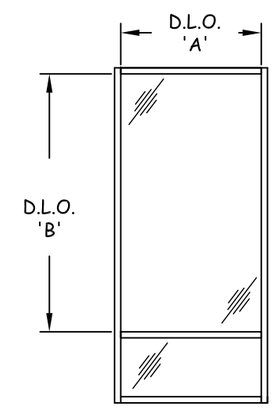

FIGURE 1

GLASS TABLE NOTES:

1. GLASS CAPACITIES ON THIS SHEET ARE BASED ON ASTM E1300-04 (3 SEC. GUSTS).
2. GLASS CAPACITIES ARE LIMITED BY THE RESULTS OF COMPARATIVE ANALYSIS.
3. WHERE REQUIRED, TEMPERED GLASS IS REQUIRED TO BE USED TO COMPLY WITH SAFETY GLAZING REQUIREMENTS OUTLINED IN IBC/IRC SECTION 2406.
3. REFER TO FIGURE 1 FOR ILLUSTRATION OF DAYLIGHT OPENING DIMENSIONS.

YKK AP AMERICA
1229 HWY 441 BYPASS
DUBLIN, GEORGIA 31021
PH: (478) 277-1955 FX: (678) 838-6001

TITLE: SERIES YHC 300 OG I.G. LOW PRESSURE CURTAIN WALL
GLASS CAPACITY CHARTS

PREPARED BY:
BUILDING DROPS, INC.
398 E. DANIA BEACH BLVD. #338
DANIA BEACH, FL 33004
PH: (954) 399-8478 FX: (954) 744-4738

REVISIONS

NO.	DESCRIPTION	BY	DATE

STATE OF TEXAS
HERMES F. NORERO
118471
PROFESSIONAL ENGINEER

DATE: 09.18.14
DWN BY: SM
CHK BY: MSS
SCALE: NTS

DWG #: YKK044

SHEET: 8 OF 30

SINGLE SPAN VERTICAL MULLION CAPACITIES

SINGLE SPAN DESIGN PRESSURE TABLE (+/- PSF)			
MAX. SPAN 'L' (IN.)	MAX. TRIB. WIDTH 'W' (IN.)	M1	M2
108	24	65.0	65
	30	65.0	65
	36	65.0	65
	42	65.0	65
	48	65.0	65
	54	65.0	65
	60	65.0	65
	66	65.0	65
	74	61.5	65
114	24	65.0	65
	30	65.0	65
	36	65.0	65
	42	65.0	65
	48	65.0	65
	54	65.0	65
	60	65.0	65
	66	65.0	65
	74	58.3	65
120	24	65.0	65
	30	65.0	65
	36	65.0	65
	42	65.0	65
	48	65.0	65
	54	65.0	65
	60	65.0	65
	66	62.0	65
	74	55.3	65
126	24	65.0	65
	30	65.0	65
	36	65.0	65
	42	65.0	65
	48	65.0	65
	54	65.0	65
	60	65.0	65
	66	59.1	65
	74	52.7	65

SINGLE SPAN DESIGN PRESSURE TABLE (+/- PSF)			
MAX. SPAN 'L' (IN.)	MAX. TRIB. WIDTH 'W' (IN.)	M1	M2
132	24	-	65
	30	-	65
	36	-	65
	42	-	65
	48	-	65
	54	-	65
	60	-	65
	66	-	65
	74	-	65
138	24	-	65
	30	-	65
	36	-	65
	42	-	65
	48	-	65
	54	-	65
	60	-	65
	66	-	65
	74	-	65
144	24	-	65
	30	-	65
	36	-	65
	42	-	65
	48	-	65
	54	-	65
	60	-	65
	66	-	65
	74	-	65
150	24	-	65
	30	-	65
	36	-	65
	42	-	65
	48	-	65
	54	-	65
	60	-	65
	66	-	65
	74	-	65

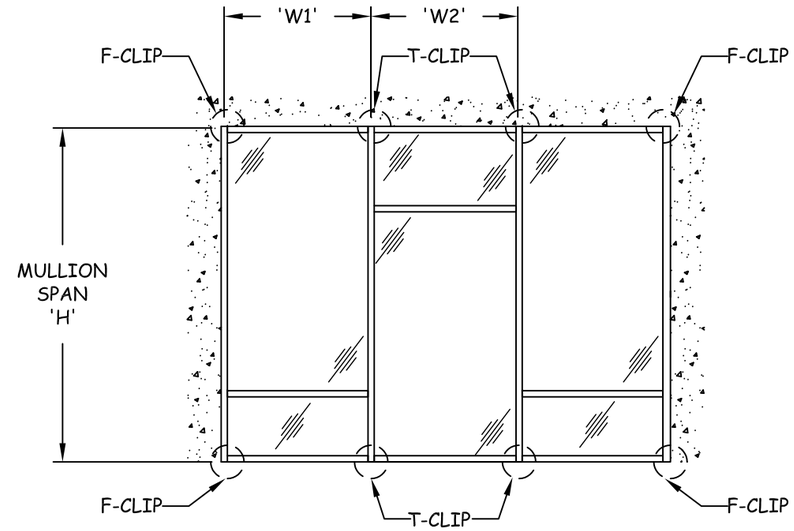

SINGLE SPAN ANCHOR LAYOUT

MULLION SPACING OR BAY WIDTH, 'W'	$W = \frac{W1 + W2}{2}$

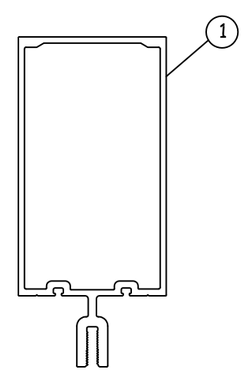

M1
STANDARD VERTICAL MULLION

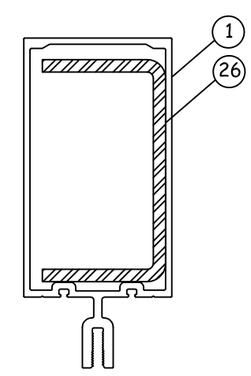

M2
REINFORCED VERTICAL MULLION

VERTICAL MEMBER SINGLE SPAN NOTES:

1. DETAILS AT RIGHT HAVE BEEN SHOWN FOR ILLUSTRATIVE PURPOSES. FOR DETAILS OF FULL ASSEMBLY PLEASE REFER TO APPLICABLE DETAILS ON SHEET 4.
2. TABULATED DESIGN PRESSURE VALUES ARE BASED ON LIMITATIONS OF DEFLECTION, FIBERSTRESS, & END REACTION PER MULLION SPAN ('L') AND MULLION SPACING ('W').
3. FOR SITE CONDITIONS WHICH EXCEED LIMITATIONS SHOWN, FURTHER ENGINEERING MAY BE REQUIRED ON A CASE BY CASE BASIS.
4. FOR T, F, OR S CLIP ANCHORS, PLEASE REFER TO SHEETS 12-19 FOR ANCHOR SELECTION, SUBSTRATE REQUIREMENTS, AND FURTHER LIMITATIONS OF USE.

YKK AP AMERICA
1229 HWY 441 BYPASS
DUBLIN, GEORGIA 31021
PH: (478) 277-1955 FX: (678) 838-6001

TITLE: SERIES YHC 300 OG I.G. LOW PRESSURE CURTAIN WALL
SINGLE SPAN VERTICAL MULLION CAPACITIES

PREPARED BY:
BUILDING DROPS, INC.
398 E. DANIA BEACH BLVD. #338
DANIA BEACH, FL 33004
PH: (954) 399-8478 FX: (954) 744-4738

REVISIONS

NO.	DESCRIPTION	BY	DATE

STATE OF TEXAS
HERMES F. NORERO
118471
PROFESSIONAL ENGINEER

DATE: 09.18.14
DWN BY: SM
CHK BY: MSS
SCALE: NTS

DWG #: YKK044

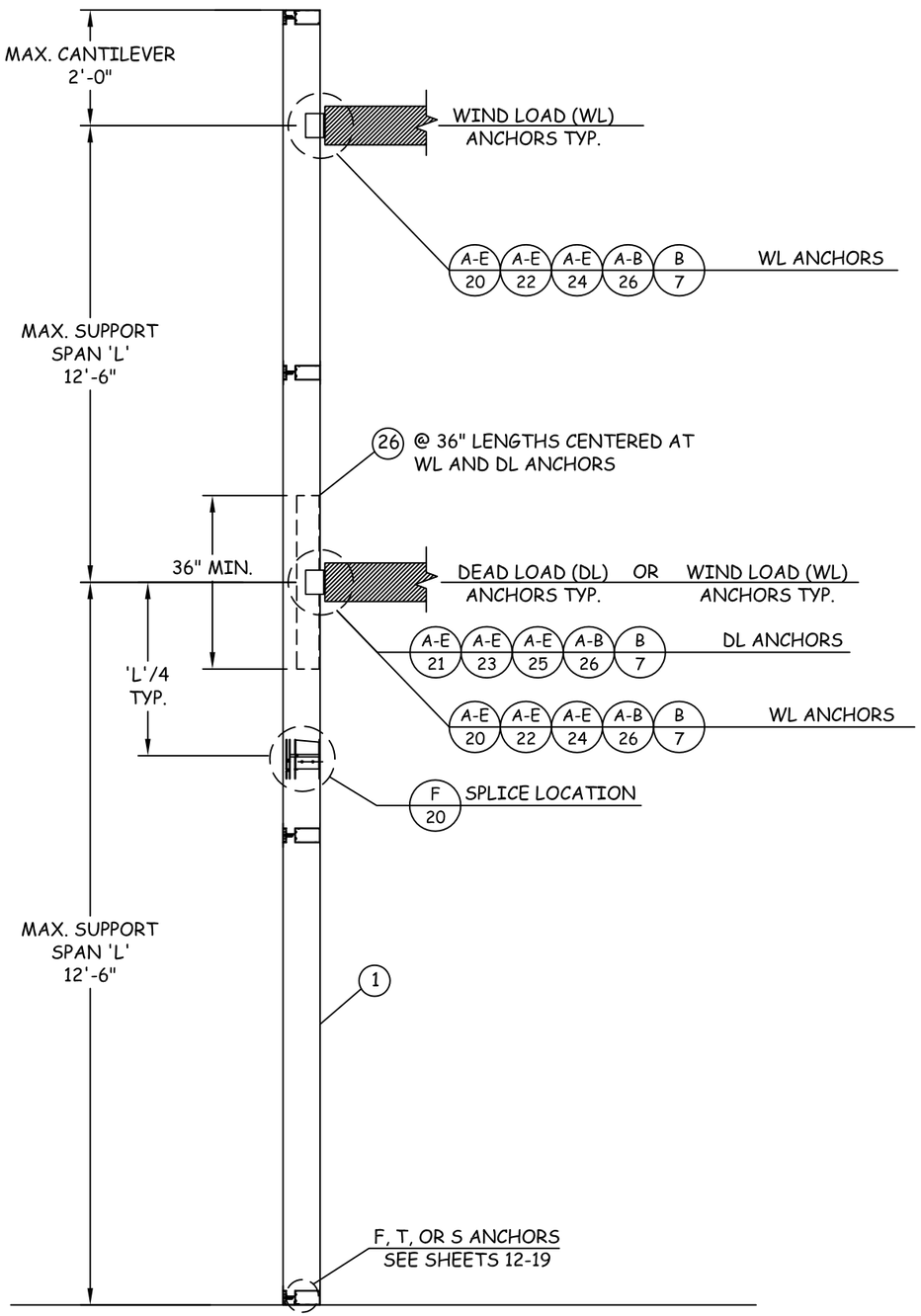

VERTICAL SECTION
TWIN-SPAN TYP.

MULTI SPAN VERTICAL MULLION CAPACITIES

TWIN SPAN DESIGN PRESSURE TABLE (+/- PSF)		
MAX. SPAN 'L' (IN.)	MAX. TRIB. WIDTH 'W' (IN.)	M3
150	74	65

VERTICAL MEMBER MULTI SPAN NOTES:

1. DETAIL BELOW HAS BEEN SHOWN FOR ILLUSTRATIVE PURPOSES. FOR DETAILS OF FULL ASSEMBLY, PLEASE REFER TO APPLICABLE DETAILS ON SHEETS 4 & 7.
2. TABULATED DESIGN PRESSURE VALUES ARE BASED ON LIMITATIONS OF DEFLECTION, FIBERSTRESS, & END REACTION PER MULLION SPAN ('L') AND MULLION SPACING ('W') AND HAVE BEEN PROVEN THROUGH APPLICABLE TESTING.
3. FOR SITE CONDITIONS WHICH EXCEED LIMITATIONS SHOWN, FURTHER ENGINEERING MAY BE REQUIRED ON A CASE BY CASE BASIS.
4. FOR T, F, & S CLIP ANCHORS, PLEASE REFER TO SHEET 12-19 FOR ANCHOR SELECTION, SUBSTRATE REQUIREMENTS, AND FURTHER LIMITATIONS OF USE.
5. FOR WL & DL ANCHORS, PLEASE REFER TO SHEETS 7 & 20-26 FOR APPLIABLE DETAILS
6. SPLICES SHALL BE LOCATED AS SPECIFIED HEREIN OR AS DESIGNED BY ENGINEER OF RECORD.
7. REFER TO SHEET 2, TWIN SPAN ELEVATION, FOR ILLUSTRATION OF DETERMINING MAX. TRIBUTARY WIDTH 'W'.

MULLION SPACING OR BAY WIDTH, 'W'	$W = \frac{W1 + W2}{2}$

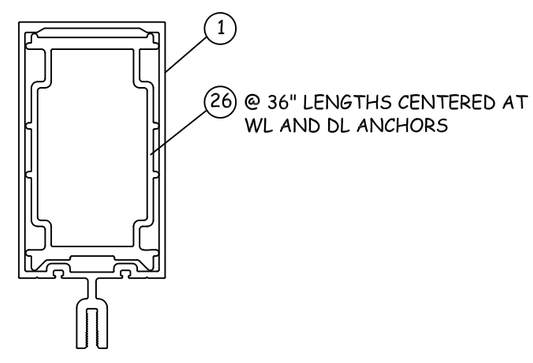

M3
STANDARD VERTICAL MULLION W/ REINFORCEMENT AT DL & WL ANCHORS

YKK AP AMERICA
1229 HWY 441 BYPASS
DUBLIN, GEORGIA 31021
PH: (478) 277-1955 FX: (678) 838-6001

TITLE: SERIES YHC 300 OG I.G. LOW PRESSURE CURTAIN WALL
MULTI SPAN VERTICAL MULLION CAPACITY

PREPARED BY:
BUILDING DROPS, INC.
398 E. DANIA BEACH BLVD. #338
DANIA BEACH, FL 33004
PH: (954) 399-8478 FX: (954) 744-4738

REVISIONS

NO.	DESCRIPTION	BY	DATE

STATE OF TEXAS
HERMES F. NORERO
118471
PROFESSIONAL ENGINEER

DATE: 09.18.14
DWN BY: SM
CHK BY: MSS
SCALE: NTS

DWG #: YKK044

HORIZONTAL MULLION CAPACITY

LIGHT DUTY HORIZONTAL MULLION WL & DL COMBINATION	
MAX. WIDTH	DESIGN PRESSURE (+/- PSF)
45	65

LIGHT DUTY HORIZONTAL MULLION NOTES:

1. CHART IS BASED ON TWO SETTING BLOCKS (E2-0623) PLACED AT 1/4 SPAN LENGTH
2. DEAD LOADS CALCULATED FOR MAX. 10' TALL D.L.O. ABOVE HORIZONTAL.
3. D.L.O. MAY NOT EXCEED MAX DIMENSIONS IN GLASS CHARTS FOR GLASS TYPE.

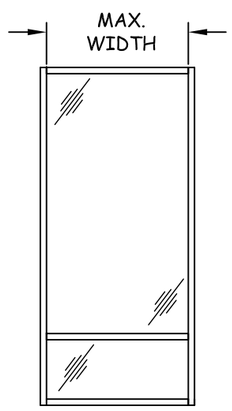

FIG. 1

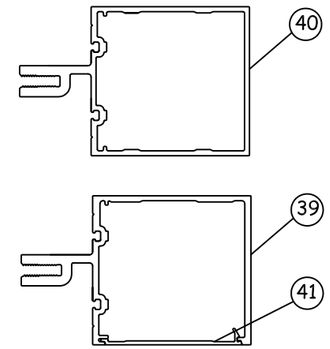

LIGHT DUTY HORIZONTAL MULLIONS

STANDARD DUTY HORIZONTAL MULLION WL & DL COMBINATION	
MAX. WIDTH	DESIGN PRESSURE (+/- PSF)
74	65

STANDARD DUTY HORIZONTAL MULLION NOTES:

1. CHART IS BASED ON TWO SETTING BLOCKS (E2-0623) PLACED AT 1/4 SPAN LENGTH
2. DEAD LOADS CALCULATED FOR MAX. 10' TALL D.L.O. ABOVE HORIZONTAL.
3. D.L.O. MAY NOT EXCEED MAX DIMENSIONS IN GLASS CHARTS FOR GLASS TYPE.

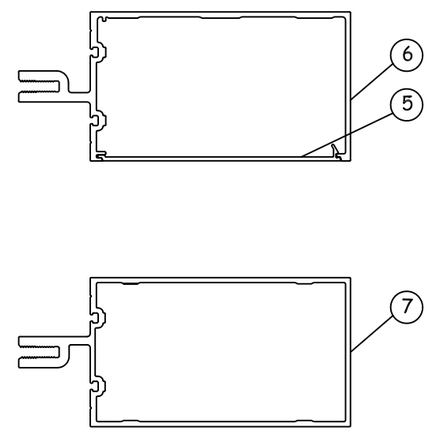

STANDARD DUTY HORIZONTAL MULLIONS

YKK AP AMERICA
1229 HWY 441 BYPASS
DUBLIN, GEORGIA 31021
PH: (478) 277-1955 FX: (678) 838-6001

TITLE: SERIES YHC 300 OG I.G. LOW PRESSURE CURTAIN WALL HORIZONTAL MULLION CAPACITIES

PREPARED BY:
BUILDING DROPS, INC.
398 E. DANIA BEACH BLVD. #338
DANIA BEACH, FL 33004
PH: (954) 399-8478 FX: (954) 744-4738

REVISIONS

NO.	DESCRIPTION	BY	DATE

STATE OF TEXAS
HERMES F. NORERO
118471
PROFESSIONAL ENGINEER

DATE: 09.18.14
DWN BY: SM
CHK BY: MSS
SCALE: NTS

DWG #: YKK044

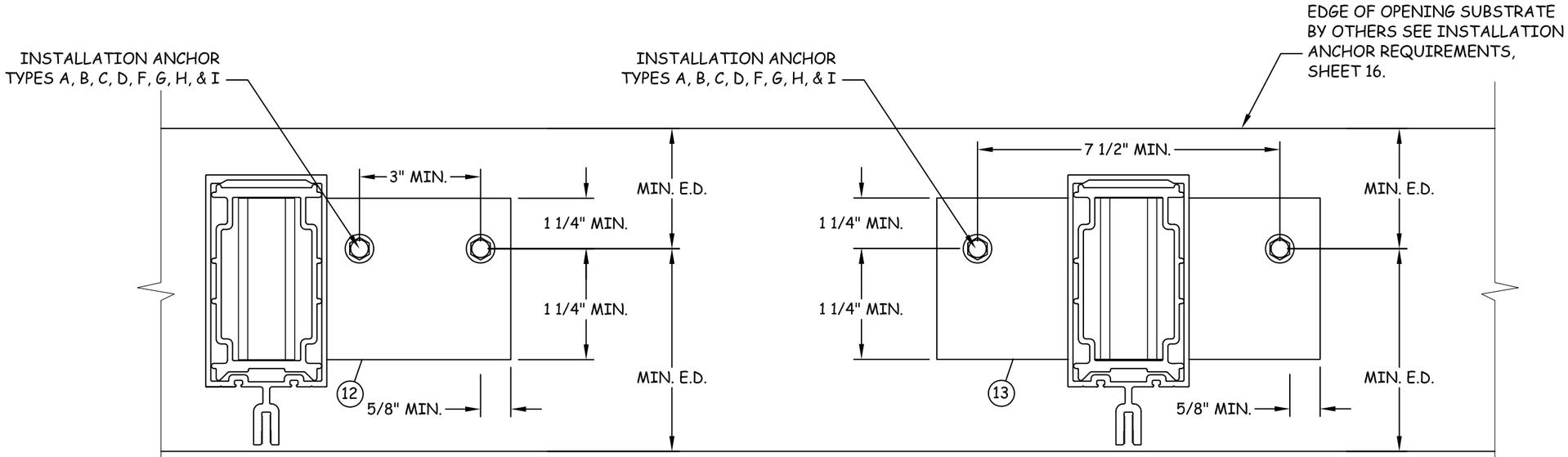

A/12 HORIZONTAL SECTION

F-ANCHOR
CONFIG 1

B/12 HORIZONTAL SECTION

T-ANCHOR
CONFIG 1

NOTE:
1. ANCHORS SHOWN HEREIN ARE FOR ILLUSTRATION PURPOSES ONLY. ACTUAL ANCHOR IDENTIFICATION SHALL BE PER ANCHOR MANUFACTURERS INSTALLATION INSTRUCTIONS
2. ANCHOR BOLT EXTENSIONS MAY BE CLIPPED TO T.O. HEX NUT AND SHEAR BLOCKS MAY BE NOTCHED TO ALLOW FOR ANCHOR CLEARANCE.
3. REFER TO INSTALLATION ANCHOR REQUIREMENTS FOR MINIMUM EDGE DISTANCES (E.D.), EMBEDMENTS (EMBED), & PROPERTIES OF OPENING SUBSTRATE, SHEET 16.

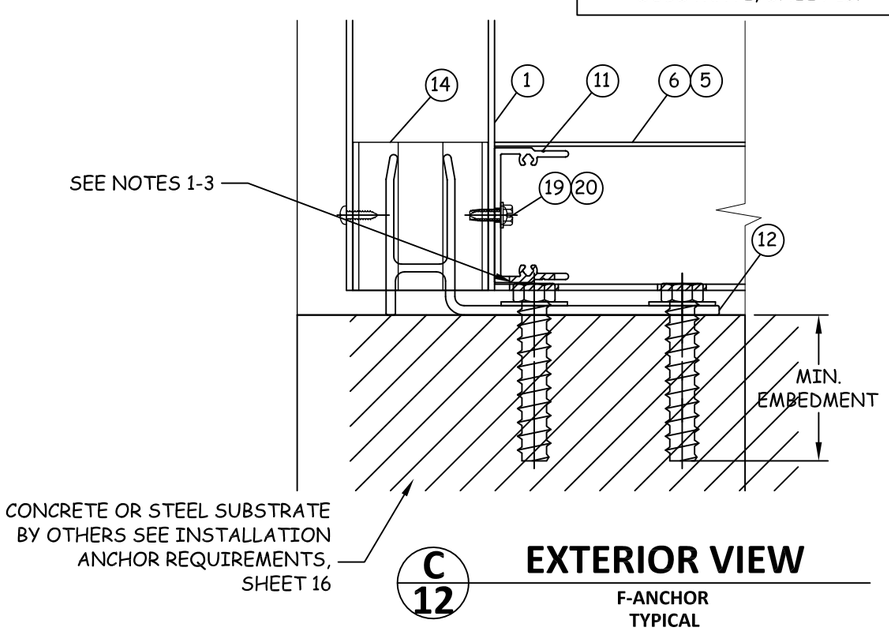

C/12 EXTERIOR VIEW

F-ANCHOR
TYPICAL

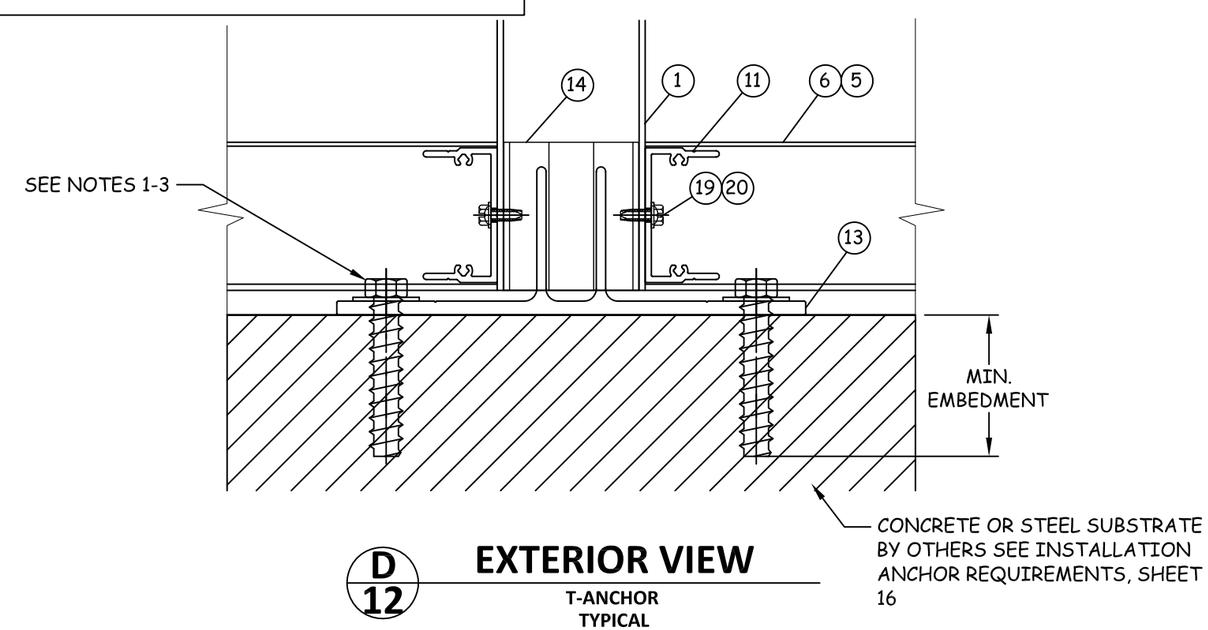

D/12 EXTERIOR VIEW

T-ANCHOR
TYPICAL

YKK AP AMERICA
1229 HWY 441 BYPASS
DUBLIN, GEORGIA 31021
PH: (478) 277-1955 FX: (678) 838-6001

TITLE: SERIES YHC 300 OG I.G. LOW PRESSURE CURTAIN WALL
T & F ANCHOR CONFIGURATIONS (1)

PREPARED BY:
BUILDING DROPS, INC.
398 E. DANIA BEACH BLVD. #338
DANIA BEACH, FL 33004
PH: (954) 399-8478 FX: (954) 744-4738

REVISIONS

NO.	DESCRIPTION	BY	DATE

STATE OF TEXAS
HERMES F. NORERO
118471
PROFESSIONAL ENGINEER

DATE: 09.18.14
DWN BY: SM
CHK BY: MSS
SCALE: NTS

DWG #: YKK044

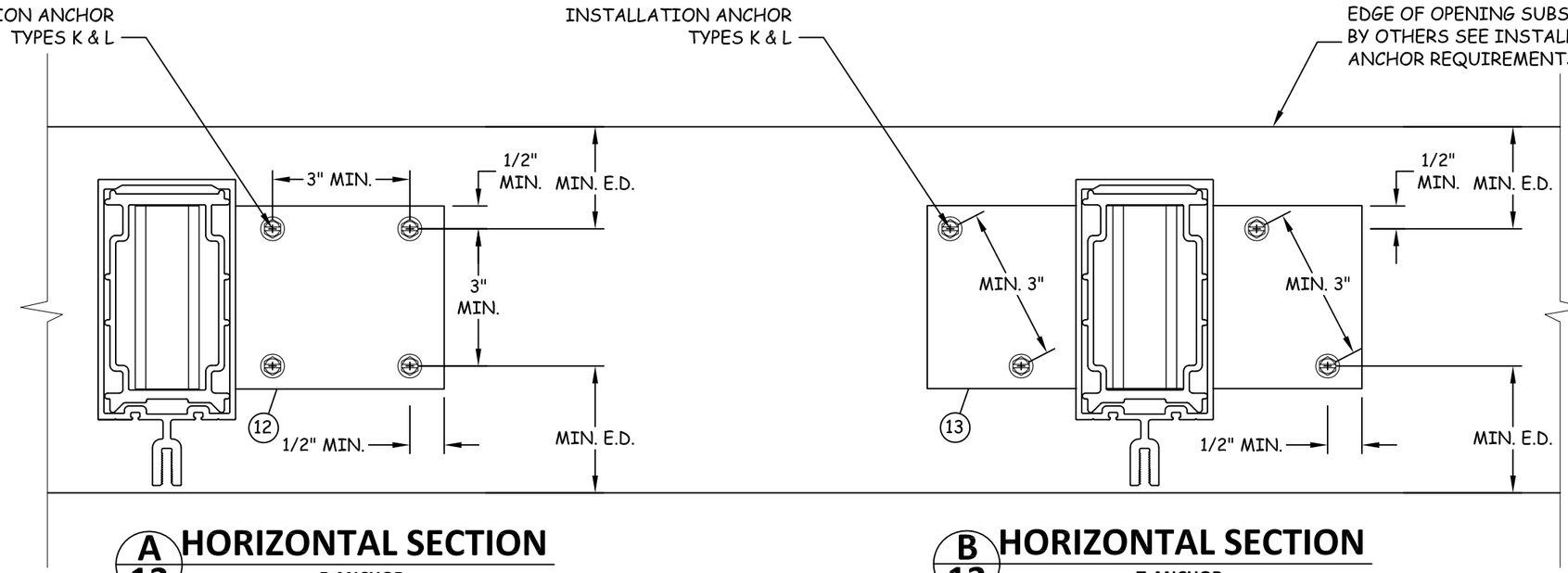

A 13 HORIZONTAL SECTION

F-ANCHOR
CONFIG 2

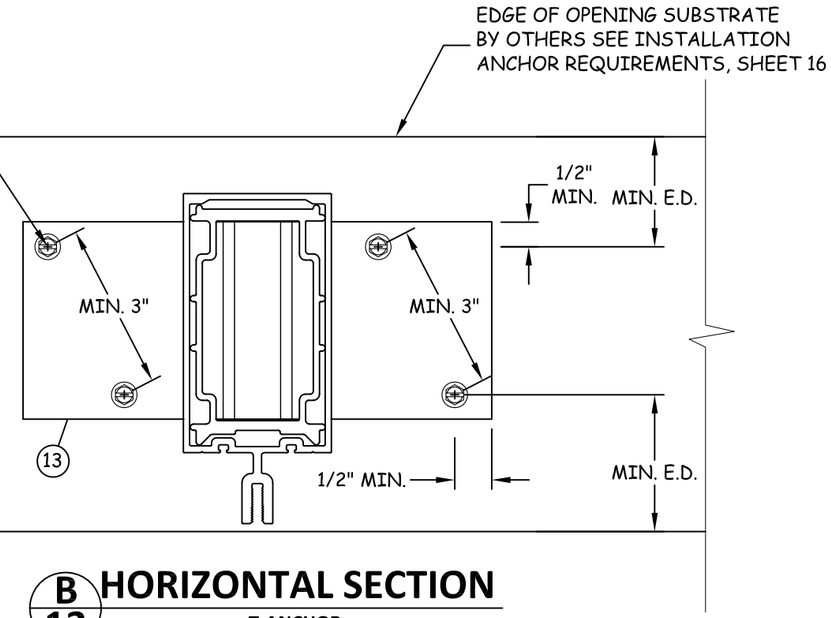

B 13 HORIZONTAL SECTION

T-ANCHOR
CONFIG 2

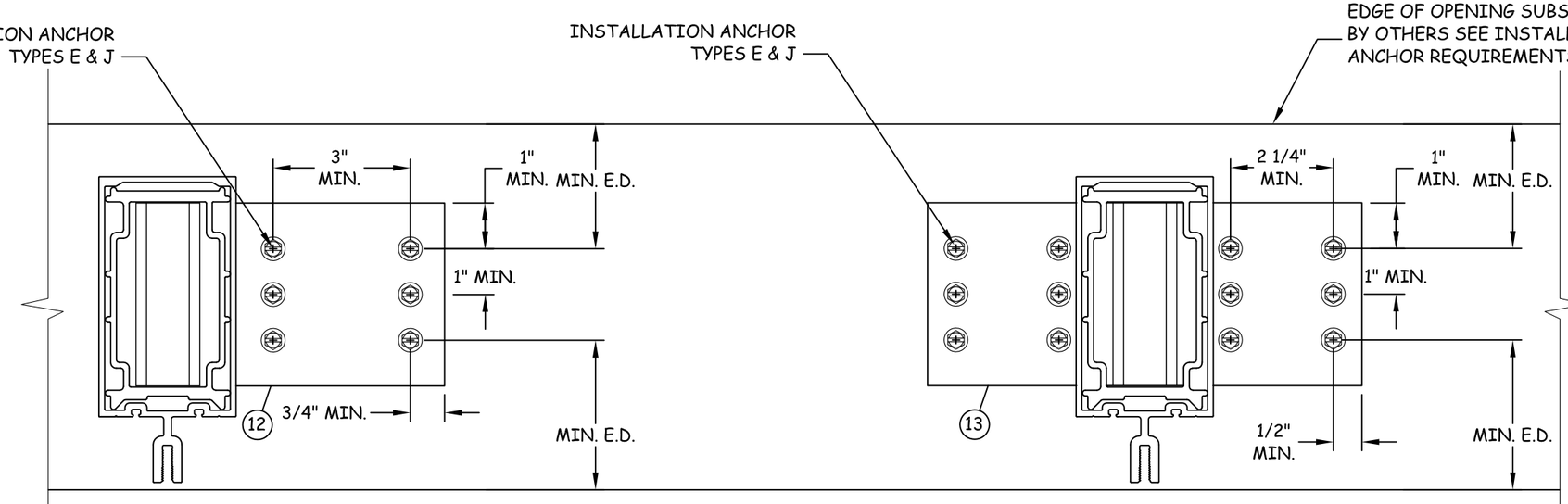

C 13 HORIZONTAL SECTION

F-ANCHOR
CONFIG 3

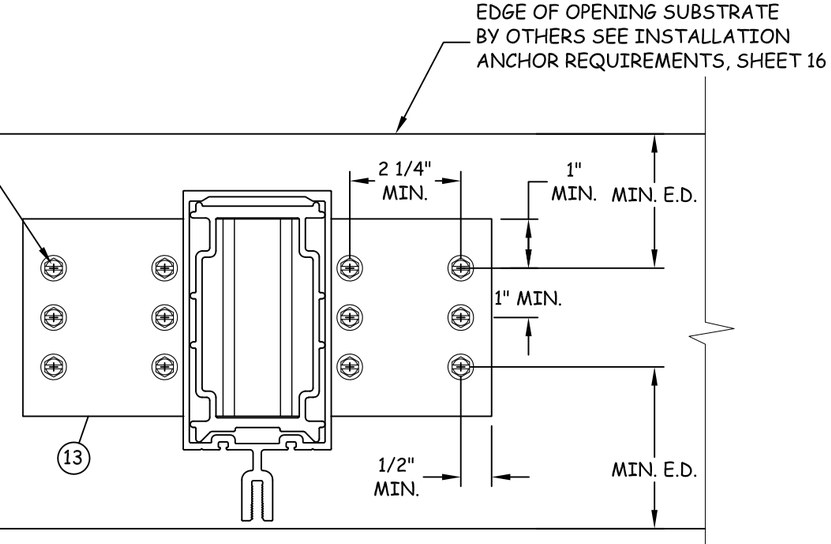

D 13 HORIZONTAL SECTION

T-ANCHOR
CONFIG 3

YKK AP AMERICA
1229 HWY 441 BYPASS
DUBLIN, GEORGIA 31021
PH: (478) 277-1955 FX: (678) 838-6001

TITLE: SERIES YHC 300 OG I.G. LOW PRESSURE CURTAIN WALL T & F ANCHOR CONFIGURATIONS (2)

PREPARED BY:
BUILDING DROPS, INC.
398 E. DANIA BEACH BLVD. #338
DANIA BEACH, FL 33004
PH: (954) 399-8478 FX: (954) 744-4738

REVISIONS

NO.	DESCRIPTION	BY	DATE

STATE OF TEXAS
HERMES F. NORERO
118471
PROFESSIONAL ENGINEER

DATE: 09.18.14	DWN BY: SM	CHK BY: MSS	SCALE: NTS

DWG #: YKK044

SHEET: 13 OF 30

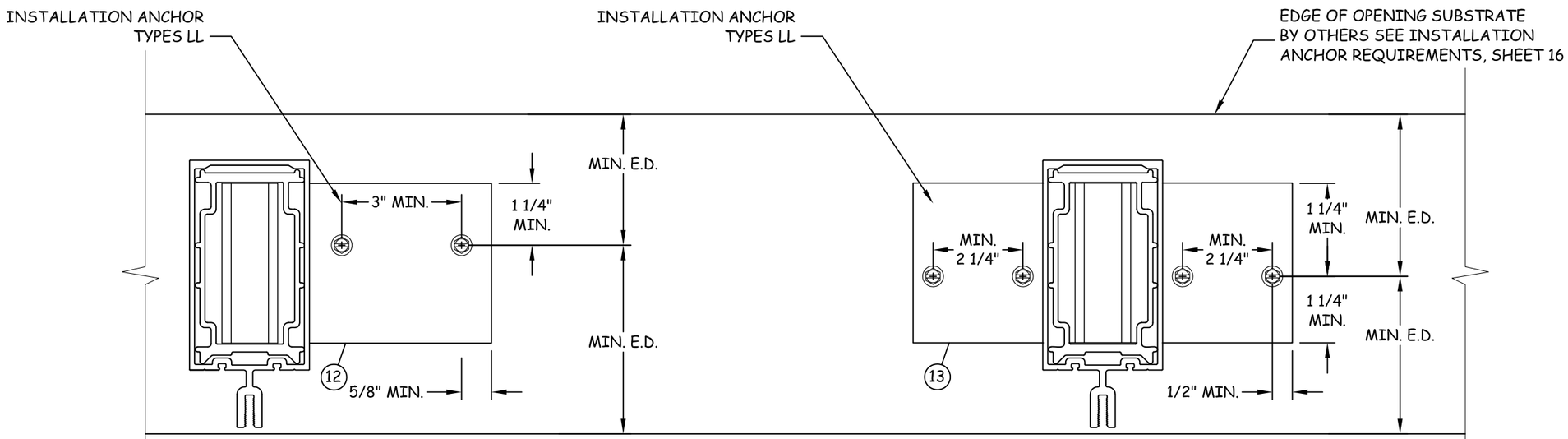

A 14 HORIZONTAL SECTION
F-ANCHOR
CONFIG 7

B 14 HORIZONTAL SECTION
T-ANCHOR
CONFIG 7

YKK AP AMERICA
1229 HWY 441 BYPASS
DUBLIN, GEORGIA 31021
PH: (478) 277-1955 FX: (678) 838-6001

TITLE: SERIES YHC 300 OG I.G. LOW PRESSURE CURTAIN WALL T & F ANCHOR CONFIGURATIONS (3)

PREPARED BY:
BUILDING DROPS, INC.
398 E. DANIA BEACH BLVD. #338
DANIA BEACH, FL 33004
PH: (954) 399-8478 FX: (954) 744-4738

REVISIONS

NO.	DESCRIPTION	BY	DATE

STATE OF TEXAS
HERMES F. NORERO
118471
PROFESSIONAL ENGINEER

DATE: 09.18.14
DWN BY: SM
CHK BY: MSS
SCALE: NTS

DWG #: YKK044

SHEET: 14 OF 30

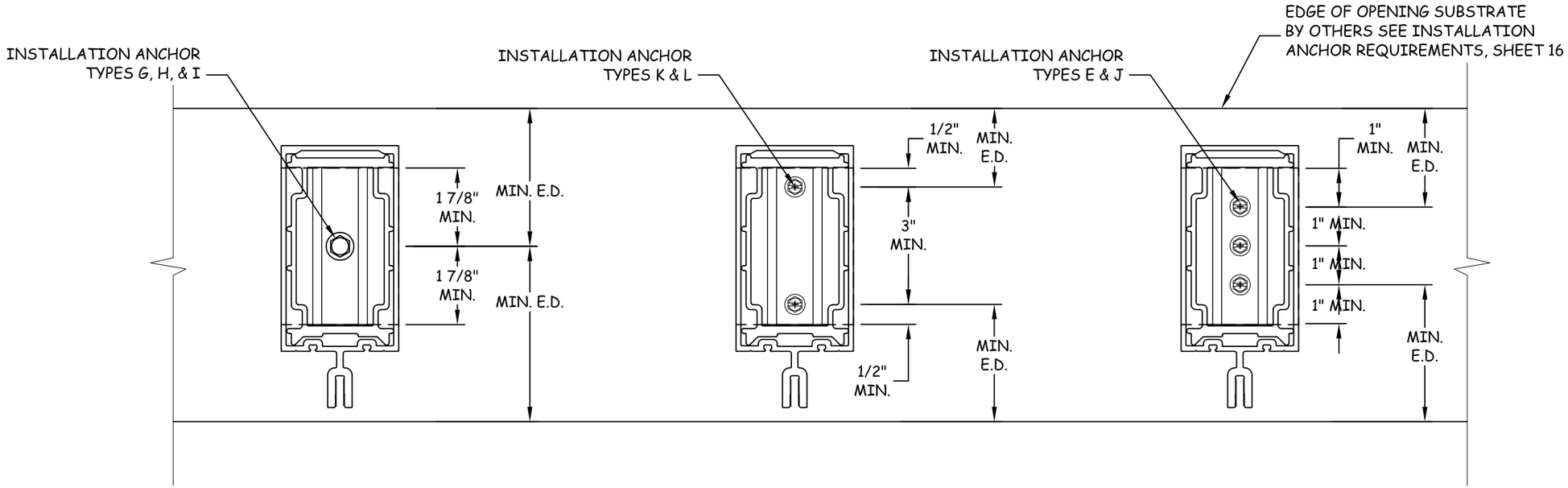

A 15 HORIZONTAL SECTION
S-ANCHOR
CONFIG 4

B 15 HORIZONTAL SECTION
S-ANCHOR
CONFIG 5

C 15 HORIZONTAL SECTION
S-ANCHOR
CONFIG 6

NOTE:
1. ANCHORS SHOWN HEREIN ARE FOR ILLUSTRATION PURPOSES ONLY. ACTUAL ANCHOR IDENTIFICATION SHALL BE PER ANCHOR MANUFACTURERS INSTALLATION INSTRUCTIONS
2. REFER TO INSTALLATION ANCHOR REQUIREMENTS FOR MINIMUM EDGE DISTANCES (E.D.), EMBEDMENTS (EMBED), & PROPERTIES OF OPENING SUBSTRATE.
3. ALTERNATIVELY, F-ANCHORS MAY BE USED IN LIEU OF S-ANCHORS AT DOOR JAMB TO SIDELITE LOCATIONS. REFER TO SHEETS 12-14 FOR DETAILS & SHEET 18 FOR F-ANCHOR CAPACITIES.

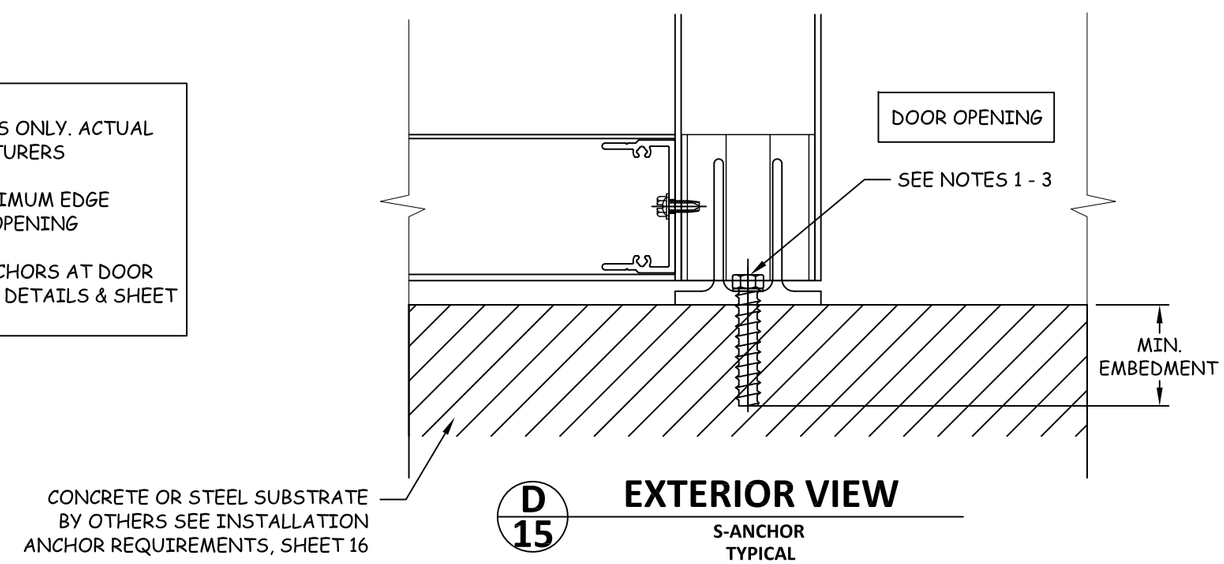

D 15 EXTERIOR VIEW
S-ANCHOR
TYPICAL

YKK AP AMERICA
1229 HWY 441 BYPASS
DUBLIN, GEORGIA 31021
PH: (478) 277-1955 FX: (678) 838-6001

TITLE: SERIES YHC 300 OG I.G.
LOW PRESSURE CURTAIN WALL
S ANCHOR
CONFIGURATIONS

PREPARED BY:
BUILDING DROPS, INC.
398 E. DANIA BEACH BLVD. #338
DANIA BEACH, FL 33004
PH: (954) 399-8478 FX: (954) 744-4738

REVISIONS

NO.	DESCRIPTION	BY	DATE

STATE OF TEXAS
HERMES F. NORERO
118471
PROFESSIONAL ENGINEER

DATE: 09.18.14	DWN BY: SM	CHK BY: MSS	SCALE: NTS

DWG #: YKK044

SHEET: 15 OF 30

F, T, & S ANCHOR TYPES

TYPE	DIAMETER	ANCHOR TYPE	SUBSTRATE	MINIMUM EDGE DISTANCE	MINIMUM EMBEDMENT	REF. DETAILS
A	1/2"	SIMPSON TITEN HD	MIN. 4000 PSI CONCRETE UNCRACKED	3 5/8"	4"	A/12, B/12
B	1/2"	HILTI KWIK BOLT3	MIN. 4000 PSI CONCRETE UNCRACKED	4"	3 1/4"	A/12, B/12
C	1/2"	HILTI HAS CS THREADED ROD W/ HILTI HIT HY200 EPOXY	MIN. 4000 PSI CONCRETE CRACKED OR UNCRACKED	4"	5"	A/12, B/12
D	1/2"	SELF-TAPPING OR THREADED BOLT, MIN. SAE GR. 5 OR ASTM A325	MIN. 3/16" THICK A36 STEEL	1 1/4"	- FOR SELF-TAPPING OR DRILL & TAPPED HOLES, MIN. 3 THREADS PENETRATION BEYOND STEEL STRUCTURE. - FOR STANDARD DRILLED HOLES, PENETRATION TO BE SUFFICIENT TO MAINTAIN FULL ENGAGEMENT WITH NUT & WASHER	A/12, B/12
E	5/16"	ELCO DRIL-FLEX OR HILTI KWIK-FLEX SELF-DRILLING	MIN. 12 GAUGE STEEL, MIN. Fy = 33KSI	3/4"	MIN. 3 THREADS PENETRATION BEYOND STEEL STRUCTURE	C/13, D/13
F	1/2"	SIMPSON TITEN HD	MIN. 4000 PSI CONCRETE CRACKED OR UNCRACKED	3 5/8"	4"	A/12, B/12
G	3/8"	SIMPSON TITEN HD	MIN. 4000 PSI CONCRETE CRACKED OR UNCRACKED	3 5/8"	3 1/4"	A/12, B/12
H	3/8"	HILTI KWIK BOLT3	MIN. 4000 PSI CONCRETE UNCRACKED	4"	2 5/16"	A/12, B/12
I	3/8"	HILTI KWIK BOLT3	MIN. 4000 PSI CONCRETE UNCRACKED	2 1/2"	2 5/16"	A/12, B/12
J	5/16"	ELCO DRIL-FLEX OR HILTI KWIK-FLEX SELF-DRILLING	MIN. 16 GAUGE STEEL, MIN. Fy = 33KSI	3/4"	MIN. 3 THREADS PENETRATION BEYOND STEEL STRUCTURE	C/13, D/13
K	#14	ELCO CRETE FLEX SS4	MIN. 3500 PSI CONCRETE UNCRACKED	1 3/4"	1 3/4"	A/13, B/13
L	1/4"	HILTI KWIK-CONII+	MIN. 2000 PSI CONCRETE UNCRACKED	1 3/4"	1 3/4"	A/13, B/13
LL	1/4"	HILTI KWIK-CONII+	MIN. 2000 PSI CONCRETE UNCRACKED	1 3/4"	1 3/4"	A/14, B/14
M	M12	HALFEN TEE-BOLT GR. 8.8 FOR USE WITH HT3512 & HT6112 HALFEN CAST IN CHANNELS	MIN. 3000 PSI CONCRETE UNCRACKED	3"	PER HALFEN'S SPECIFICATIONS HT3512 = 3 1/8" HT6112 = 6 3/8"	A/27, B/27, C/27, D/27

NOTE:
1. ANCHORS SHALL BE INSTALLED IN ACCORDANCE WITH ANCHOR MANUCTURER'S INSTALLATION INSTRUCTIONS.
2. REFER TO ANCHOR LAYOUTS AT RIGHT FOR LOCATIONS AND DETERMINING MAX. LENGTHS (L) AND TRIBUTARY WIDTHS (W).
3. FOR SITE CONDITIONS NOT SHOWN IN THE DETAILS HEREIN OR EDGE DISTANCE REQUIREMENTS TO BE MODIFIED, ANCHORS MAY BE ENGINEERED ON A SITE SPECIFIC BASIS.
4. REFER TO SHEETS 12-15 FOR ANCHOR CONFIGURATIONS.
5. REFER TO SHEETS 17-19 FOR T, F, & S ANCHOR TYPE CAPACITIES.

MULLION SPACING OR BAY WIDTH, 'W', FOR T-ANCHORS	$W = \frac{W1 + W2}{2}$
MULLION SPACING OR BAY WIDTH, 'W', FOR F-ANCHORS AT JAMBS	W = W1
MULLION SPACING OR BAY WIDTH, 'W', FOR F-ANCHORS AT VERTICAL MULL WITH DOORS	$*W = \frac{W1 + W2}{2}$

*REFER TO SHEET 2 FOR ILLUSTRATION OF DETERMINING MAX. TRIB. WIDTH

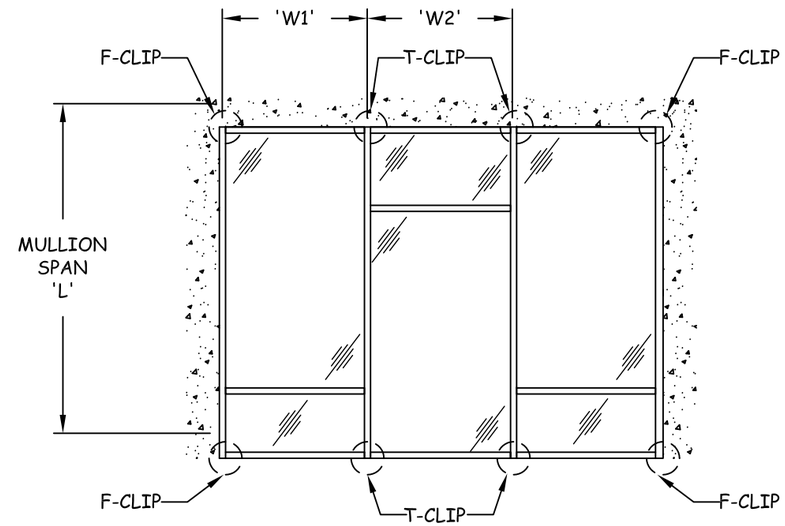

SINGLE SPAN ANCHOR LAYOUT

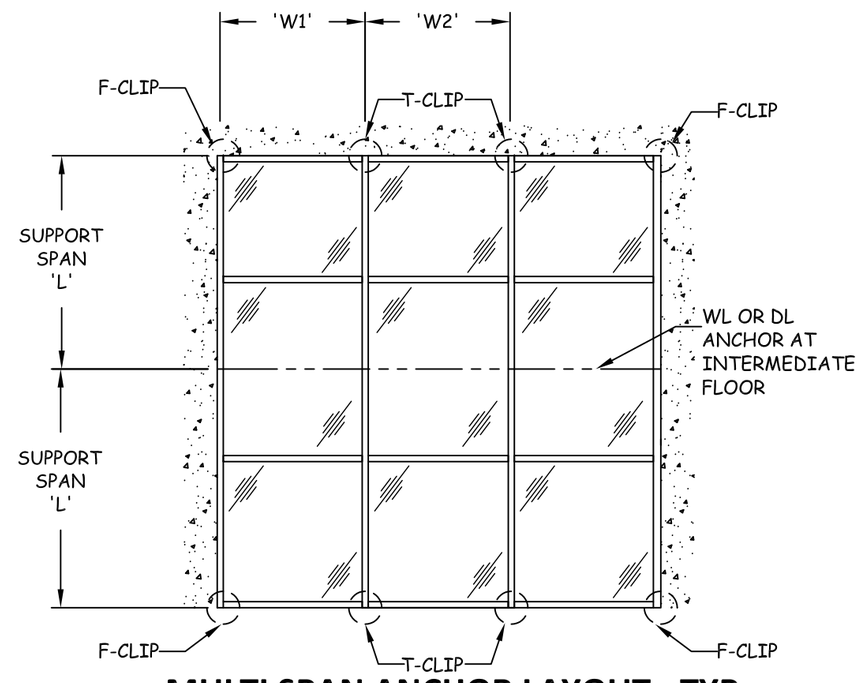

MULTI SPAN ANCHOR LAYOUT - TYP.

YKK AP AMERICA
1229 HWY 441 BYPASS
DUBLIN, GEORGIA 31021
PH: (478) 277-1955 FX: (678) 838-6001

TITLE: SERIES YHC 300 OG I.G. LOW PRESSURE CURTAIN WALL F, T, & S ANCHOR TYPES, REQUIREMENTS & DIAGRAMS

PREPARED BY:
BUILDING DROPS, INC.
398 E. DANIA BEACH BLVD. #338
DANIA BEACH, FL 33004
PH: (954) 399-8478 FX: (954) 744-4738

REVISIONS

NO.	DESCRIPTION	BY	DATE

STATE OF TEXAS
HERMES F. NORERO
118471
PROFESSIONAL ENGINEER

DATE: 09.18.14
DWN BY: SM
CHK BY: MSS
SCALE: NTS

DWG #: YKK044

SINGLE SPAN & MULTI SPAN
T & F ANCHOR CAPACITIES

FRAME SIZE		MAX. ANCHOR CAPACITY - DESIGN PRESSURES (+/- PSF)														
MAX. SPAN 'L'	MAX. WIDTH 'W'	A	B	C	D	E	F	G	H	I	J	K	L	LL	M	N
72	36	65.0	65.0	65.0	65.0	65.0	65.0	65.0	65.0	65.0	65.0	65.0	65.0	65.0	65.0	65.0
	42	65.0	65.0	65.0	65.0	65.0	65.0	65.0	65.0	65.0	65.0	65.0	65.0	65.0	65.0	65.0
	48	65.0	65.0	65.0	65.0	65.0	65.0	65.0	65.0	65.0	65.0	65.0	65.0	65.0	65.0	65.0
	54	65.0	65.0	65.0	65.0	65.0	65.0	65.0	65.0	65.0	65.0	64.1	64.1	65.0	65.0	65.0
	60	65.0	65.0	65.0	65.0	65.0	65.0	65.0	65.0	65.0	65.0	57.7	57.7	65.0	65.0	65.0
	66	65.0	65.0	65.0	65.0	65.0	65.0	65.0	65.0	65.0	65.0	52.4	52.4	65.0	65.0	65.0
	74	65.0	65.0	65.0	65.0	65.0	65.0	65.0	65.0	65.0	65.0	46.8	46.8	59.5	65.0	65.0
78	36	65.0	65.0	65.0	65.0	65.0	65.0	65.0	65.0	65.0	65.0	65.0	65.0	65.0	65.0	65.0
	42	65.0	65.0	65.0	65.0	65.0	65.0	65.0	65.0	65.0	65.0	65.0	65.0	65.0	65.0	65.0
	48	65.0	65.0	65.0	65.0	65.0	65.0	65.0	65.0	65.0	65.0	65.0	65.0	65.0	65.0	65.0
	54	65.0	65.0	65.0	65.0	65.0	65.0	65.0	65.0	65.0	65.0	59.1	59.1	65.0	65.0	65.0
	60	65.0	65.0	65.0	65.0	65.0	65.0	65.0	65.0	65.0	65.0	53.2	53.2	65.0	65.0	65.0
	66	65.0	65.0	65.0	65.0	65.0	65.0	65.0	65.0	65.0	65.0	48.4	48.4	61.5	65.0	65.0
	74	65.0	65.0	65.0	65.0	65.0	65.0	65.0	65.0	65.0	62.4	43.2	43.2	54.9	65.0	65.0
84	36	65.0	65.0	65.0	65.0	65.0	65.0	65.0	65.0	65.0	65.0	65.0	65.0	65.0	65.0	65.0
	42	65.0	65.0	65.0	65.0	65.0	65.0	65.0	65.0	65.0	65.0	65.0	65.0	65.0	65.0	65.0
	48	65.0	65.0	65.0	65.0	65.0	65.0	65.0	65.0	65.0	65.0	61.8	61.8	65.0	65.0	65.0
	54	65.0	65.0	65.0	65.0	65.0	65.0	65.0	65.0	65.0	65.0	54.9	54.9	65.0	65.0	65.0
	60	65.0	65.0	65.0	65.0	65.0	65.0	65.0	65.0	65.0	65.0	49.4	49.4	62.9	65.0	65.0
	66	65.0	65.0	65.0	65.0	65.0	65.0	65.0	65.0	65.0	64.9	44.9	44.9	57.1	65.0	65.0
	74	65.0	65.0	65.0	65.0	65.0	65.0	65.0	65.0	62.5	57.9	40.1	40.1	51.0	65.0	65.0
90	36	65.0	65.0	65.0	65.0	65.0	65.0	65.0	65.0	65.0	65.0	65.0	65.0	65.0	65.0	65.0
	42	65.0	65.0	65.0	65.0	65.0	65.0	65.0	65.0	65.0	65.0	65.0	65.0	65.0	65.0	65.0
	48	65.0	65.0	65.0	65.0	65.0	65.0	65.0	65.0	65.0	65.0	57.7	57.7	65.0	65.0	65.0
	54	65.0	65.0	65.0	65.0	65.0	65.0	65.0	65.0	65.0	65.0	51.3	51.3	65.0	65.0	65.0
	60	65.0	65.0	65.0	65.0	65.0	65.0	65.0	65.0	65.0	65.0	46.1	46.1	58.7	65.0	65.0
	66	65.0	65.0	65.0	65.0	65.0	65.0	65.0	65.0	65.0	60.6	41.9	41.9	53.3	65.0	65.0
	74	65.0	65.0	65.0	65.0	65.0	65.0	65.0	65.0	58.4	54.1	37.4	37.4	47.6	65.0	65.0
96	36	65.0	65.0	65.0	65.0	65.0	65.0	65.0	65.0	65.0	65.0	65.0	65.0	65.0	65.0	65.0
	42	65.0	65.0	65.0	65.0	65.0	65.0	65.0	65.0	65.0	65.0	61.8	61.8	65.0	65.0	65.0
	48	65.0	65.0	65.0	65.0	65.0	65.0	65.0	65.0	65.0	65.0	54.1	54.1	65.0	65.0	65.0
	54	65.0	65.0	65.0	65.0	65.0	65.0	65.0	65.0	65.0	65.0	48.1	48.1	61.1	65.0	65.0
	60	65.0	65.0	65.0	65.0	65.0	65.0	65.0	65.0	65.0	62.5	43.3	43.3	55.0	65.0	65.0
	66	65.0	65.0	65.0	65.0	65.0	65.0	65.0	65.0	61.4	56.8	39.3	39.3	50.0	65.0	65.0
	74	65.0	65.0	65.0	65.0	65.0	65.0	65.0	65.0	54.7	50.7	35.1	35.1	44.6	65.0	65.0
102	36	65.0	65.0	65.0	65.0	65.0	65.0	65.0	65.0	65.0	65.0	65.0	65.0	65.0	65.0	65.0
	42	65.0	65.0	65.0	65.0	65.0	65.0	65.0	65.0	65.0	65.0	58.2	58.2	65.0	65.0	65.0
	48	65.0	65.0	65.0	65.0	65.0	65.0	65.0	65.0	65.0	65.0	50.9	50.9	64.7	65.0	65.0
	54	65.0	65.0	65.0	65.0	65.0	65.0	65.0	65.0	65.0	65.0	45.2	45.2	57.5	65.0	65.0
	60	65.0	65.0	65.0	65.0	65.0	65.0	65.0	65.0	63.5	58.8	40.7	40.7	51.8	65.0	65.0
	66	65.0	65.0	65.0	65.0	65.0	65.0	65.0	65.0	57.8	53.5	37.0	37.0	47.1	65.0	65.0
	74	65.0	65.0	65.0	65.0	65.0	65.0	62.0	65.0	51.5	47.7	33.0	33.0	42.0	65.0	65.0
108	36	65.0	65.0	65.0	65.0	65.0	65.0	65.0	65.0	65.0	65.0	64.1	64.1	65.0	65.0	65.0
	42	65.0	65.0	65.0	65.0	65.0	65.0	65.0	65.0	65.0	65.0	54.9	54.9	65.0	65.0	65.0
	48	65.0	65.0	65.0	65.0	65.0	65.0	65.0	65.0	65.0	65.0	48.1	48.1	61.1	65.0	65.0
	54	65.0	65.0	65.0	65.0	65.0	65.0	65.0	65.0	65.0	61.7	42.7	42.7	54.3	65.0	65.0
	60	65.0	65.0	65.0	65.0	65.0	65.0	65.0	65.0	60.0	55.6	38.4	38.4	48.9	65.0	65.0
	66	65.0	65.0	65.0	65.0	65.0	65.0	65.0	65.0	54.5	50.5	34.9	34.9	44.4	65.0	65.0
	74	65.0	65.0	65.0	65.0	65.0	64.9	58.6	65.0	48.6	45.0	31.2	31.2	39.6	65.0	65.0

FRAME SIZE		MAX. ANCHOR CAPACITY - DESIGN PRESSURES (+/- PSF)														
MAX. SPAN 'L'	MAX. WIDTH 'W'	A	B	C	D	E	F	G	H	I	J	K	L	LL	M	N
114	36	65.0	65.0	65.0	65.0	65.0	65.0	65.0	65.0	65.0	65.0	60.7	60.7	65.0	65.0	65.0
	42	65.0	65.0	65.0	65.0	65.0	65.0	65.0	65.0	65.0	65.0	52.0	52.0	65.0	65.0	65.0
	48	65.0	65.0	65.0	65.0	65.0	65.0	65.0	65.0	65.0	65.0	45.5	45.5	57.9	65.0	65.0
	54	65.0	65.0	65.0	65.0	65.0	65.0	65.0	65.0	63.2	58.5	40.5	40.5	51.5	65.0	65.0
	60	65.0	65.0	65.0	65.0	65.0	65.0	65.0	65.0	56.8	52.6	36.4	36.4	46.3	65.0	65.0
	66	65.0	65.0	65.0	65.0	65.0	65.0	62.2	65.0	51.7	47.8	33.1	33.1	42.1	65.0	65.0
	74	65.0	65.0	65.0	65.0	65.0	61.5	55.5	65.0	46.1	42.7	29.5	29.5	37.6	65.0	65.0
120	36	65.0	65.0	65.0	65.0	65.0	65.0	65.0	65.0	65.0	65.0	57.7	57.7	65.0	65.0	65.0
	42	65.0	65.0	65.0	65.0	65.0	65.0	65.0	65.0	65.0	65.0	49.4	49.4	62.9	65.0	65.0
	48	65.0	65.0	65.0	65.0	65.0	65.0	65.0	65.0	65.0	62.5	43.3	43.3	55.0	65.0	65.0
	54	65.0	65.0	65.0	65.0	65.0	65.0	65.0	65.0	60.0	55.6	38.4	38.4	48.9	65.0	65.0
	60	65.0	65.0	65.0	65.0	65.0	65.0	65.0	65.0	54.0	50.0	34.6	34.6	44.0	65.0	65.0
	66	65.0	65.0	65.0	65.0	65.0	65.0	59.1	65.0	49.1	45.5	31.5	31.5	40.0	65.0	65.0
	74	65.0	65.0	65.0	65.0	65.0	58.4	52.7	65.0	43.8	40.5	28.1	28.1	35.7	65.0	65.0
126	36	65.0	65.0	65.0	65.0	65.0	65.0	65.0	65.0	65.0	65.0	54.9	54.9	65.0	65.0	65.0
	42	65.0	65.0	65.0	65.0	65.0	65.0	65.0	65.0	65.0	65.0	47.1	47.1	59.9	65.0	65.0
	48	65.0	65.0	65.0	65.0	65.0	65.0	65.0	65.0	64.3	59.5	41.2	41.2	52.4	65.0	65.0
	54	65.0	65.0	65.0	65.0	65.0	65.0	65.0	65.0	57.1	52.9	36.6	36.6	46.6	65.0	65.0
	60	65.0	65.0	65.0	65.0	65.0	65.0	61.9	65.0	51.4	47.6	33.0	33.0	41.9	65.0	65.0
	66	65.0	65.0	65.0	65.0	65.0	62.3	56.3	65.0	46.8	43.3	30.0	30.0	38.1	65.0	65.0
	74	65.0	65.0	65.0	65.0	65.0	55.6	50.2	65.0	41.7	38.6	26.7	26.7	34.0	65.0	65.0
132	36	65.0	65.0	65.0	65.0	65.0	65.0	65.0	65.0	65.0	65.0	52.4	52.4	65.0	65.0	65.0
	42	65.0	65.0	65.0	65.0	65.0	65.0	65.0	65.0	65.0	64.9	44.9	44.9	57.1	65.0	65.0
	48	65.0	65.0	65.0	65.0	65.0	65.0	65.0	65.0	61.4	56.8	39.3	39.3	50.0	65.0	65.0
	54	65.0	65.0	65.0	65.0	65.0	65.0	65.0	65.0	54.5	50.5	34.9	34.9	44.4	65.0	65.0
	60	65.0	65.0	65.0	65.0	65.0	65.0	59.1	65.0	49.1	45.5	31.5	31.5	40.0	65.0	65.0
	66	65.0	65.0	65.0	65.0	65.0	59.5	53.7	65.0	44.6	41.3	28.6	28.6	36.4	65.0	65.0
	74	65.0	65.0	65.0	65.0	65.0	53.1	47.9	65.0	39.8	36.9	25.5	25.5	32.4	65.0	65.0
138	36	65.0	65.0	65.0	65.0	65.0	65.0	65.0	65.0	65.0	65.0	50.1	50.1	63.8	65.0	65.0
	42	65.0	65.0	65.0	65.0	65.0	65.0	65.0	65.0	65.0	62.1	43.0	43.0	54.7	65.0	65.0
	48	65.0	65.0	65.0	65.0	65.0	65.0	65.0	65.0	58.7	54.3	37.6	37.6	47.8	65.0	65.0
	54	65.0	65.0	65.0	65.0	65.0	65.0	62.8	65.0	52.2	48.3	33.4	33.4	42.5	65.0	65.0
	60	65.0	65.0	65.0	65.0	65.0	62.6	56.5	65.0	47.0	43.5	30.1	30.1	38.3	65.0	65.0
	66	65.0	65.0	65.0	65.0	65.0	56.9	51.4	65.0	42.7	39.5	27.4	27.4	34.8	65.0	65.0
	74	65.0	65.0	65.0	65.0	65.0	50.8	45.8	63.5	38.1	35.3	24.4	24.4	31.0	65.0	65.0
144	36	65.0	65.0	65.0	65.0	65.0	65.0	65.0	65.0	65.0	65.0	48.1	48.1	61.1	65.0	65.0
	42	65.0	65.0	65.0	65.0	65.0	65.0	65.0	65.0	64.3	59.5	41.2	41.2	52.4	65.0	65.0
	48	65.0	65.0	65.0	65.0	65.0	65.0	65.0	65.0	56.3	52.1	36.0	36.0	45.8	65.0	65.0
	54	65.0	65.0	65.0	65.0	65.0	65.0	60.2	65.0	50.0	46.3	32.0	32.0	40.7	65.0	65.0
	60	65.0	65.0	65.0	65.0	65.0	60.0	54.2	65.0	45.0	41.7	28.8	28.8	36.7	65.0	65.0
	66	65.0	65.0	65.0	65.0	65.0	54.5	49.2	65.0	40.9	37.9	26.2	26.2	33.3	65.0	65.0
	74	65.0	65.0	65.0	65.0	65.0	48.6	43.9	60.8	36.5	33.8	23.4	23.4	29.7	65.0	65.0
150	36	65.0	65.0	65.0	65.0	65.0	65.0	65.0	65.0	65.0	65.0	46.1	46.1	58.7	65.0	65.0
	42	65.0	65.0	65.0	65.0	65.0	65.0	65.0	65.0	61.7	57.1	39.5	39.5	50.3	65.0	65.0
	48	65.0	65.0	65.0	65.0	65.0	65.0	65.0	65.0	54.0	50.0	34.6	34.6	44.0	65.0	65.0
	54	65.0	65.0	65.0	65.0	65.0	64.0	57.8	65.0	48.0	44.4	30.8	30.8	39.1	65.0	65.0
	60	65.0	65.0	65.0	65.0	65.0	57.6	52.0	65.0	43.2	40.0	27.7	27.7	35.2	65.0	65.0
	66	65.0	65.0	65.0	65.0	65.0	52.4	47.3	65.0	39.3	36.4	25.2	25.2	32.0	65.0	65.0
	74	65.0	65.0	65.0	65.0	65.0	46.7	42.2	58.4	35.0	32.4	22.4	22.4	28.5	65.0	65.0

NOTE:
1. REFER TO SHEET 12, 13, 14 & 16 FOR DETAILS OF ANCHOR REQUIREMENTS. AND DETERMINING MAX. SPAN 'L' AND TRIBUTARY WIDTHS 'W'

YKK AP AMERICA
1229 HWY 441 BYPASS
DUBLIN, GEORGIA 31021
PH: (478) 277-1955 FX: (678) 838-6001

TITLE: SERIES YHC 300 OG I.G. LOW PRESSURE CURTAIN WALL
SINGLE SPAN & MULTI SPAN
T & F ANCHOR CAPACITIES

PREPARED BY:
BUILDING DROPS, INC.
398 E. DANIA BEACH BLVD. #338
DANIA BEACH, FL 33004
PH: (954) 399-8478 FX: (954) 744-4738

REVISIONS

NO.	DESCRIPTION	BY	DATE

STATE OF TEXAS
HERMES F. NORERO
118471
PROFESSIONAL ENGINEER

DATE: 09.18.14
DWN BY: SM
CHK BY: MSS
SCALE: NTS

DWG #: YKK044

SINGLE SPAN & MULTI SPAN
F ANCHOR CAPACITIES WHEN USED AT DOOR JAMB TO SIDELITE LOCATIONS

FRAME SIZE		MAX. ANCHOR CAPACITY - DESIGN PRESSURES (+/- PSF)														
MAX. SPAN 'L'	MAX. WIDTH 'W'	A	B	C	D	E	F	G	H	I	J	K	L	LL	M	N
72	36	65.0	65.0	65.0	65.0	65.0	65.0	65.0	65.0	65.0	65.0	65.0	65.0	61.1	65.0	65.0
	42	65.0	65.0	65.0	65.0	65.0	65.0	65.0	65.0	64.3	59.5	65.0	65.0	52.4	65.0	65.0
	48	65.0	65.0	65.0	65.0	65.0	65.0	65.0	65.0	56.3	52.1	62.5	62.5	45.8	65.0	65.0
	54	65.0	65.0	65.0	65.0	65.0	65.0	60.2	65.0	50.0	46.3	55.6	55.6	40.7	65.0	65.0
	60	65.0	65.0	65.0	65.0	65.0	60.0	54.2	65.0	45.0	41.7	50.0	50.0	36.7	65.0	65.0
	66	65.0	65.0	65.0	65.0	65.0	54.5	49.2	65.0	40.9	37.9	45.5	45.5	33.3	65.0	65.0
	74	65.0	65.0	65.0	65.0	65.0	48.6	43.9	60.8	36.5	33.8	40.5	40.5	29.7	65.0	65.0
78	36	65.0	65.0	65.0	65.0	65.0	65.0	65.0	65.0	65.0	64.1	65.0	65.0	56.4	65.0	65.0
	42	65.0	65.0	65.0	65.0	65.0	65.0	65.0	65.0	59.3	54.9	65.0	65.0	48.4	65.0	65.0
	48	65.0	65.0	65.0	65.0	65.0	65.0	62.5	65.0	51.9	48.1	57.7	57.7	42.3	65.0	65.0
	54	65.0	65.0	65.0	65.0	65.0	61.5	55.6	65.0	46.2	42.7	51.3	51.3	37.6	65.0	65.0
	60	65.0	65.0	65.0	65.0	65.0	55.4	50.0	65.0	41.5	38.5	46.2	46.2	33.8	65.0	65.0
	66	65.0	65.0	65.0	65.0	65.0	50.3	45.5	62.9	37.8	35.0	42.0	42.0	30.8	65.0	65.0
	74	62.8	62.8	62.8	62.8	62.8	44.9	40.5	56.1	33.7	31.2	37.4	37.4	27.4	62.8	62.8
84	36	65.0	65.0	65.0	65.0	65.0	65.0	65.0	65.0	64.3	59.5	65.0	65.0	52.4	65.0	65.0
	42	65.0	65.0	65.0	65.0	65.0	65.0	65.0	65.0	55.1	51.0	61.2	61.2	44.9	65.0	65.0
	48	65.0	65.0	65.0	65.0	65.0	64.3	58.0	65.0	48.2	44.6	53.6	53.6	39.3	65.0	65.0
	54	65.0	65.0	65.0	65.0	65.0	57.1	51.6	65.0	42.9	39.7	47.6	47.6	34.9	65.0	65.0
	60	65.0	65.0	65.0	65.0	65.0	51.4	46.4	64.3	38.6	35.7	42.9	42.9	31.4	65.0	65.0
	66	65.0	65.0	65.0	65.0	65.0	46.8	42.2	58.4	35.1	32.5	39.0	39.0	28.6	65.0	65.0
	74	58.3	58.3	58.3	58.3	58.3	41.7	37.6	52.1	31.3	29.0	34.7	34.7	25.5	58.3	58.3
90	36	65.0	65.0	65.0	65.0	65.0	65.0	65.0	65.0	60.0	55.6	65.0	65.0	48.9	65.0	65.0
	42	65.0	65.0	65.0	65.0	65.0	65.0	61.9	65.0	51.4	47.6	57.1	57.1	41.9	65.0	65.0
	48	65.0	65.0	65.0	65.0	65.0	60.0	54.2	65.0	45.0	41.7	50.0	50.0	36.7	65.0	65.0
	54	65.0	65.0	65.0	65.0	65.0	53.3	48.1	65.0	40.0	37.0	44.4	44.4	32.6	65.0	65.0
	60	65.0	65.0	65.0	65.0	65.0	48.0	43.3	60.0	36.0	33.3	40.0	40.0	29.3	65.0	65.0
	66	61.1	61.1	61.1	61.1	61.1	43.6	39.4	54.5	32.7	30.3	36.4	36.4	26.7	61.1	61.1
	74	54.5	54.5	54.5	54.5	54.5	38.9	35.1	48.6	29.2	27.0	32.4	32.4	23.8	54.5	54.5
96	36	65.0	65.0	65.0	65.0	65.0	65.0	65.0	65.0	56.3	52.1	62.5	62.5	45.8	65.0	65.0
	42	65.0	65.0	65.0	65.0	65.0	64.3	58.0	65.0	48.2	44.6	53.6	53.6	39.3	65.0	65.0
	48	65.0	65.0	65.0	65.0	65.0	56.3	50.8	65.0	42.2	39.1	46.9	46.9	34.4	65.0	65.0
	54	65.0	65.0	65.0	65.0	65.0	50.0	45.1	62.5	37.5	34.7	41.7	41.7	30.6	65.0	65.0
	60	63.0	63.0	63.0	63.0	63.0	45.0	40.6	56.3	33.8	31.3	37.5	37.5	27.5	63.0	63.0
	66	57.2	57.2	57.2	57.2	57.2	40.9	36.9	51.1	30.7	28.4	34.1	34.1	25.0	57.2	57.2
	74	51.1	51.1	51.1	51.1	51.1	36.5	32.9	45.6	27.4	25.3	30.4	30.4	22.3	51.1	51.1
102	36	65.0	65.0	65.0	65.0	65.0	65.0	63.7	65.0	52.9	49.0	58.8	58.8	43.1	65.0	65.0
	42	65.0	65.0	65.0	65.0	65.0	60.5	54.6	65.0	45.4	42.0	50.4	50.4	37.0	65.0	65.0
	48	65.0	65.0	65.0	65.0	65.0	52.9	47.8	65.0	39.7	36.8	44.1	44.1	32.4	65.0	65.0
	54	65.0	65.0	65.0	65.0	65.0	47.1	42.5	58.8	35.3	32.7	39.2	39.2	28.8	65.0	65.0
	60	59.3	59.3	59.3	59.3	59.3	42.4	38.2	52.9	31.8	29.4	35.3	35.3	25.9	59.3	59.3
	66	53.9	53.9	53.9	53.9	53.9	38.5	34.8	48.1	28.9	26.7	32.1	32.1	23.5	53.9	53.9
	74	48.1	48.1	48.1	48.1	48.1	34.3	31.0	42.9	25.8	23.8	28.6	28.6	21.0	48.1	48.1
108	36	65.0	65.0	65.0	65.0	65.0	65.0	60.2	65.0	50.0	46.3	55.6	55.6	40.7	65.0	65.0
	42	65.0	65.0	65.0	65.0	65.0	57.1	51.6	65.0	42.9	39.7	47.6	47.6	34.9	65.0	65.0
	48	65.0	65.0	65.0	65.0	65.0	50.0	45.1	62.5	37.5	34.7	41.7	41.7	30.6	65.0	65.0
	54	62.2	62.2	62.2	62.2	62.2	44.4	40.1	55.6	33.3	30.9	37.0	37.0	27.2	62.2	62.2
	60	56.0	56.0	56.0	56.0	56.0	40.0	36.1	50.0	30.0	27.8	33.3	33.3	24.4	56.0	56.0
	66	50.9	50.9	50.9	50.9	50.9	36.4	32.8	45.5	27.3	25.3	30.3	30.3	22.2	50.9	50.9
	74	45.4	45.4	45.4	45.4	45.4	32.4	29.3	40.5	24.3	22.5	27.0	27.0	19.8	45.4	45.4

FRAME SIZE		MAX. ANCHOR CAPACITY - DESIGN PRESSURES (+/- PSF)														
MAX. SPAN 'L'	MAX. WIDTH 'W'	A	B	C	D	E	F	G	H	I	J	K	L	LL	M	N
114	36	65.0	65.0	65.0	65.0	65.0	63.2	57.0	65.0	47.4	43.9	52.6	52.6	38.6	65.0	65.0
	42	65.0	65.0	65.0	65.0	65.0	54.1	48.9	65.0	40.6	37.6	45.1	45.1	33.1	65.0	65.0
	48	65.0	65.0	65.0	65.0	65.0	47.4	42.8	59.2	35.5	32.9	39.5	39.5	28.9	65.0	65.0
	54	58.9	58.9	58.9	58.9	58.9	42.1	38.0	52.6	31.6	29.2	35.1	35.1	25.7	58.9	58.9
	60	53.0	53.0	53.0	53.0	53.0	37.9	34.2	47.4	28.4	26.3	31.6	31.6	23.2	53.0	53.0
	66	48.2	48.2	48.2	48.2	48.2	34.4	31.1	43.1	25.8	23.9	28.7	28.7	21.1	48.2	48.2
	74	43.0	43.0	43.0	43.0	43.0	30.7	27.7	38.4	23.0	21.3	25.6	25.6	18.8	43.0	43.0
120	36	65.0	65.0	65.0	65.0	65.0	60.0	54.2	65.0	45.0	41.7	50.0	50.0	36.7	65.0	65.0
	42	65.0	65.0	65.0	65.0	65.0	51.4	46.4	64.3	38.6	35.7	42.9	42.9	31.4	65.0	65.0
	48	63.0	63.0	63.0	63.0	63.0	45.0	40.6	56.3	33.8	31.3	37.5	37.5	27.5	63.0	63.0
	54	56.0	56.0	56.0	56.0	56.0	40.0	36.1	50.0	30.0	27.8	33.3	33.3	24.4	56.0	56.0
	60	50.4	50.4	50.4	50.4	50.4	36.0	32.5	45.0	27.0	25.0	30.0	30.0	22.0	50.4	50.4
	66	45.8	45.8	45.8	45.8	45.8	32.7	29.5	40.9	24.5	22.7	27.3	27.3	20.0	45.8	45.8
	74	40.8	40.8	40.8	40.8	40.8	29.2	26.4	36.5	21.9	20.3	24.3	24.3	17.8	40.8	40.8
126	36	65.0	65.0	65.0	65.0	65.0	57.1	51.6	65.0	42.9	39.7	47.6	47.6	34.9	65.0	65.0
	42	65.0	65.0	65.0	65.0	65.0	49.0	44.2	61.2	36.7	34.0	40.8	40.8	29.9	65.0	65.0
	48	60.0	60.0	60.0	60.0	60.0	42.9	38.7	53.6	32.1	29.8	35.7	35.7	26.2	60.0	60.0
	54	53.3	53.3	53.3	53.3	53.3	38.1	34.4	47.6	28.6	26.5	31.7	31.7	23.3	53.3	53.3
	60	48.0	48.0	48.0	48.0	48.0	34.3	31.0	42.9	25.7	23.8	28.6	28.6	21.0	48.0	48.0
	66	43.6	43.6	43.6	43.6	43.6	31.2	28.1	39.0	23.4	21.6	26.0	26.0	19.0	43.6	43.6
	74	38.9	38.9	38.9	38.9	38.9	27.8	25.1	34.7	20.8	19.3	23.2	23.2	17.0	38.9	38.9
132	36	65.0	65.0	65.0	65.0	65.0	54.5	49.2	65.0	40.9	37.9	45.5	45.5	33.3	65.0	65.0
	42	65.0	65.0	65.0	65.0	65.0	46.8	42.2	58.4	35.1	32.5	39.0	39.0	28.6	65.0	65.0
	48	57.2	57.2	57.2	57.2	57.2	40.9	36.9	51.1	30.7	28.4	34.1	34.1	25.0	57.2	57.2
	54	50.9	50.9	50.9	50.9	50.9	36.4	32.8	45.5	27.3	25.3	30.3	30.3	22.2	50.9	50.9
	60	45.8	45.8	45.8	45.8	45.8	32.7	29.5	40.9	24.5	22.7	27.3	27.3	20.0	45.8	45.8
	66	41.6	41.6	41.6	41.6	41.6	29.8	26.9	37.2	22.3	20.7	24.8	24.8	18.2	41.6	41.6
	74	37.1	37.1	37.1	37.1	37.1	26.5	24.0	33.2	19.9	18.4	22.1	22.1	16.2	37.1	37.1
138	36	65.0	65.0	65.0	65.0	65.0	52.2	47.1	65.0	39.1	36.2	43.5	43.5	31.9	65.0	65.0
	42	62.6	62.6	62.6	62.6	62.6	44.7	40.4	55.9	33.5	31.1	37.3	37.3	27.3	62.6	62.6
	48	54.8	54.8	54.8	54.8	54.8	39.1	35.3	48.9	29.3	27.2	32.6	32.6	23.9	54.8	54.8
	54	48.7	48.7	48.7	48.7	48.7	34.8	31.4	43.5	26.1	24.2	29.0	29.0	21.3	48.7	48.7
	60	43.8	43.8	43.8	43.8	43.8	31.3	28.3	39.1	23.5	21.7	26.1	26.1	19.1	43.8	43.8
	66	39.8	39.8	39.8	39.8	39.8	28.5	25.7	35.6	21.3	19.8	23.7	23.7	17.4	39.8	39.8
	74	35.5	35.5	35.5	35.5	35.5	25.4	22.9	31.7	19.0	17.6	21.2	21.2	15.5	35.5	35.5
144	36	65.0	65.0	65.0	65.0	65.0	50.0	45.1	62.5	37.5	34.7	41.7	41.7	30.6	65.0	65.0
	42	60.0	60.0	60.0	60.0	60.0	42.9	38.7	53.6	32.1	29.8	35.7	35.7	26.2	60.0	60.0
	48	52.5	52.5	52.5	52.5	52.5	37.5	33.9	46.9	28.1	26.0	31.3	31.3	22.9	52.5	52.5
	54	46.6	46.6	46.6	46.6	46.6	33.3	30.1	41.7	25.0	23.1	27.8	27.8	20.4	46.6	46.6
	60	42.0	42.0	42.0	42.0	42.0	30.0	27.1	37.5	22.5	20.8	25.0	25.0	18.3	42.0	42.0
	66	38.2	38.2	38.2	38.2	38.2	27.3	24.6	34.1	20.5	18.9	22.7	22.7	16.7	38.2	38.2
	74	34.0	34.0	34.0	34.0	34.0	24.3	22.0	30.4	18.2	16.9	20.3	20.3	14.9	34.0	34.0
150	36	65.0	65.0	65.0	65.0	65.0	48.0	43.3	60.0	36.0	33.3	40.0	40.0	29.3	65.0	65.0
	42	57.6	57.6	57.6	57.6	57.6	41.1	37.1	51.4	30.9	28.6	34.3	34.3	25.1	57.6	57.6
	48	50.4	50.4	50.4	50.4	50.4	36.0	32.5	45.0	27.0	25.0	30.0	30.0	22.0	50.4	50.4
	54	44.8	44.8	44.8	44.8	44.8	32.0	28.9	40.0	24.0	22.2	26.7	26.7	19.6	44.8	44.8
	60	40.3	40.3	40.3	40.3	40.3	28.8	26.0	36.0	21.6	20.0	24.0	24.0	17.6	40.3	40.3
	66	36.6	36.6	36.6	36.6	36.6	26.2	23.6	32.7	19.6	18.2	21.8	21.8	16.0	36.6	36.6
	74	32.7	32.7	32.7	32.7	32.7	23.4	21.1	29.2	17.5	16.2	19.5	19.5	14.3	32.7	32.7

NOTE:
1. REFER TO SHEET 12, 13, 14 & 16 FOR DETAILS OF ANCHOR REQUIREMENTS. AND DETERMINING MAX. SPAN 'L' AND TRIBUTARY WIDTHS 'W'
2. SEE SHEET 2, TWIN SPAN ELEVATION FOR LOCATION OF F-ANCHOR WHEN USED AT VERTICAL MULLION BETWEEN DOOR AND D.L.O.

YKK AP AMERICA
1229 HWY 441 BYPASS
DUBLIN, GEORGIA 31021
PH: (478) 277-1955 FX: (678) 838-6001

TITLE: SERIES YHC 300 OG I.G. LOW PRESSURE CURTAIN WALL SINGLE SPAN & MULTISPAN FANCHOR CAPACITIES DOOR JAMB-SIDELITE

PREPARED BY:
BUILDING DROPS, INC.
398 E. DANIA BEACH BLVD. #338
DANIA BEACH, FL 33004
PH: (954) 399-8478 FX: (954) 744-4738

REVISIONS

NO.	DESCRIPTION	BY	DATE

STATE OF TEXAS
HERMES F. NORERO
118471
PROFESSIONAL ENGINEER

DATE: 09.18.14
DWN BY: SM
CHK BY: MSS
SCALE: NTS

DWG #: YKK044

SINGLE SPAN & MULTI SPAN
S ANCHOR CAPACITIES

FRAME SIZE		MAX. ANCHOR CAPACITY - DESIGN PRESSURES (+/- PSF)						
MAX. SPAN 'L'	MAX. WIDTH 'W'	E	G	H	I	J	K	L
72	36	65.0	65.0	65.0	65.0	65.0	50.0	65.0
	42	65.0	65.0	65.0	65.0	65.0	42.9	65.0
	48	65.0	65.0	65.0	65.0	65.0	37.5	65.0
	54	65.0	65.0	65.0	64.4	65.0	33.3	65.0
	60	65.0	65.0	65.0	58.0	65.0	30.0	65.0
	66	65.0	65.0	65.0	52.7	65.0	27.3	65.0
	74	65.0	60.0	65.0	47.0	65.0	24.3	60.5
78	36	65.0	65.0	65.0	65.0	65.0	46.2	65.0
	42	65.0	65.0	65.0	65.0	65.0	39.6	65.0
	48	65.0	65.0	65.0	65.0	65.0	34.6	65.0
	54	65.0	65.0	65.0	59.5	65.0	30.8	65.0
	60	65.0	65.0	65.0	53.5	65.0	27.7	65.0
	66	65.0	62.1	65.0	48.7	65.0	25.2	62.7
	74	65.0	55.4	65.0	43.4	65.0	22.5	55.9
84	36	65.0	65.0	65.0	65.0	65.0	42.9	65.0
	42	65.0	65.0	65.0	65.0	65.0	36.7	65.0
	48	65.0	65.0	65.0	62.1	65.0	32.1	65.0
	54	65.0	65.0	65.0	55.2	65.0	28.6	65.0
	60	65.0	63.4	65.0	49.7	65.0	25.7	64.0
	66	65.0	57.7	65.0	45.2	65.0	23.4	58.2
	74	65.0	51.4	62.5	40.3	65.0	20.8	51.9
90	36	65.0	65.0	65.0	65.0	65.0	40.0	65.0
	42	65.0	65.0	65.0	65.0	65.0	34.3	65.0
	48	65.0	65.0	65.0	58.0	65.0	30.0	65.0
	54	65.0	65.0	65.0	51.6	65.0	26.7	65.0
	60	65.0	59.2	65.0	46.4	65.0	24.0	59.7
	66	65.0	53.8	65.0	42.2	65.0	21.8	54.3
	74	65.0	48.0	58.4	37.6	65.0	19.5	48.4
96	36	65.0	65.0	65.0	65.0	65.0	37.5	65.0
	42	65.0	65.0	65.0	62.1	65.0	32.1	65.0
	48	65.0	65.0	65.0	54.4	65.0	28.1	65.0
	54	65.0	61.7	65.0	48.3	65.0	25.0	62.2
	60	65.0	55.5	65.0	43.5	65.0	22.5	56.0
	66	65.0	50.5	61.4	39.5	65.0	20.5	50.9
	74	65.0	45.0	54.7	35.3	65.0	18.2	45.4
102	36	65.0	65.0	65.0	65.0	65.0	35.3	65.0
	42	65.0	65.0	65.0	58.5	65.0	30.3	65.0
	48	65.0	65.0	65.0	51.2	65.0	26.5	65.0
	54	65.0	58.0	65.0	45.5	65.0	23.5	58.6
	60	65.0	52.2	63.5	40.9	65.0	21.2	52.7
	66	65.0	47.5	57.8	37.2	65.0	19.3	47.9
	74	65.0	42.4	51.5	33.2	64.2	17.2	42.7
108	36	65.0	65.0	65.0	64.4	65.0	33.3	65.0
	42	65.0	65.0	65.0	55.2	65.0	28.6	65.0
	48	65.0	61.7	65.0	48.3	65.0	25.0	62.2
	54	65.0	54.8	65.0	43.0	65.0	22.2	55.3
	60	65.0	49.3	60.0	38.7	65.0	20.0	49.8
	66	65.0	44.8	54.5	35.2	65.0	18.2	45.3
	74	65.0	40.0	48.6	31.4	60.6	16.2	40.4

FRAME SIZE		MAX. ANCHOR CAPACITY - DESIGN PRESSURES (+/- PSF)						
MAX. SPAN 'L'	MAX. WIDTH 'W'	E	G	H	I	J	K	L
114	36	65.0	65.0	65.0	61.1	65.0	31.6	65.0
	42	65.0	65.0	65.0	52.3	65.0	27.1	65.0
	48	65.0	58.4	65.0	45.8	65.0	23.7	58.9
	54	65.0	51.9	63.2	40.7	65.0	21.1	52.4
	60	65.0	46.7	56.8	36.6	65.0	18.9	47.2
	66	65.0	42.5	51.7	33.3	64.4	17.2	42.9
	74	65.0	37.9	46.1	29.7	57.5	15.4	38.2
120	36	65.0	65.0	65.0	58.0	65.0	30.0	65.0
	42	65.0	63.4	65.0	49.7	65.0	25.7	64.0
	48	65.0	55.5	65.0	43.5	65.0	22.5	56.0
	54	65.0	49.3	60.0	38.7	65.0	20.0	49.8
	60	65.0	44.4	54.0	34.8	65.0	18.0	44.8
	66	65.0	40.4	49.1	31.6	61.2	16.4	40.7
	74	65.0	36.0	43.8	28.2	54.6	14.6	36.3
126	36	65.0	65.0	65.0	55.2	65.0	28.6	65.0
	42	65.0	60.4	65.0	47.3	65.0	24.5	61.0
	48	65.0	52.9	64.3	41.4	65.0	21.4	53.3
	54	65.0	47.0	57.1	36.8	65.0	19.0	47.4
	60	65.0	42.3	51.4	33.1	64.1	17.1	42.7
	66	65.0	38.4	46.8	30.1	58.3	15.6	38.8
	74	65.0	34.3	41.7	26.9	52.0	13.9	34.6
132	36	65.0	65.0	65.0	52.7	65.0	27.3	65.0
	42	65.0	57.7	65.0	45.2	65.0	23.4	58.2
	48	65.0	50.5	61.4	39.5	65.0	20.5	50.9
	54	65.0	44.8	54.5	35.2	65.0	18.2	45.3
	60	65.0	40.4	49.1	31.6	61.2	16.4	40.7
	66	65.0	36.7	44.6	28.8	55.6	14.9	37.0
	74	65.0	32.7	39.8	25.7	49.6	13.3	33.0
138	36	65.0	64.3	65.0	50.4	65.0	26.1	64.9
	42	65.0	55.2	65.0	43.2	65.0	22.4	55.7
	48	65.0	48.3	58.7	37.8	65.0	19.6	48.7
	54	65.0	42.9	52.2	33.6	65.0	17.4	43.3
	60	65.0	38.6	47.0	30.3	58.5	15.7	39.0
	66	65.0	35.1	42.7	27.5	53.2	14.2	35.4
	74	65.0	31.3	38.1	24.5	47.5	12.7	31.6
144	36	65.0	61.7	65.0	48.3	65.0	25.0	62.2
	42	65.0	52.9	64.3	41.4	65.0	21.4	53.3
	48	65.0	46.3	56.3	36.3	65.0	18.8	46.7
	54	65.0	41.1	50.0	32.2	62.3	16.7	41.5
	60	65.0	37.0	45.0	29.0	56.1	15.0	37.3
	66	65.0	33.6	40.9	26.4	51.0	13.6	33.9
	74	65.0	30.0	36.5	23.5	45.5	12.2	30.3
150	36	65.0	59.2	65.0	46.4	65.0	24.0	59.7
	42	65.0	50.7	61.7	39.8	65.0	20.6	51.2
	48	65.0	44.4	54.0	34.8	65.0	18.0	44.8
	54	65.0	39.5	48.0	30.9	59.8	16.0	39.8
	60	65.0	35.5	43.2	27.8	53.9	14.4	35.8
	66	65.0	32.3	39.3	25.3	49.0	13.1	32.6
	74	65.0	28.8	35.0	22.6	43.7	11.7	29.1

NOTE:
1. REFER TO SHEET 15 & 16 FOR DETAILS OF ANCHOR REQUIREMENTS. AND DETERMINING MAX. SPAN 'L' AND TRIBUTARY WIDTHS 'W'
2. SEE SHEET 2, TWIN SPAN ELEVATION FOR LOCATION OF F-ANCHOR WHEN USED AT VERTICAL MULLION BETWEEN DOOR AND D.L.O.

YKK AP AMERICA
1229 HWY 441 BYPASS
DUBLIN, GEORGIA 31021
PH: (478) 277-1955 FX: (678) 838-6001

TITLE: SERIES YHC 300 OG I.G. LOW PRESSURE CURTAIN WALL
SINGLE SPAN & MULTI SPAN
S ANCHOR CAPACITIES

PREPARED BY:
BUILDING DROPS, INC.
398 E. DANIA BEACH BLVD. #338
DANIA BEACH, FL 33004
PH: (954) 399-8478 FX: (954) 744-4738

REVISIONS

NO.	DESCRIPTION	BY	DATE

STATE OF TEXAS
HERMES F. NORERO
118471
PROFESSIONAL ENGINEER

DATE: 09.18.14
DWN BY: SM
CHK BY: MSS
SCALE: NTS

DWG #: YKK044

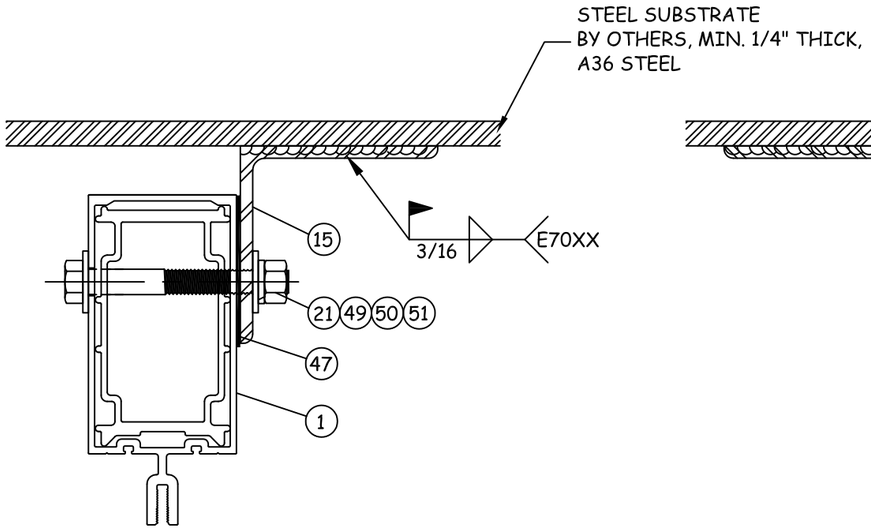

A 20 HORIZONTAL SECTION

WIND LOAD ANCHOR
AT JAMB

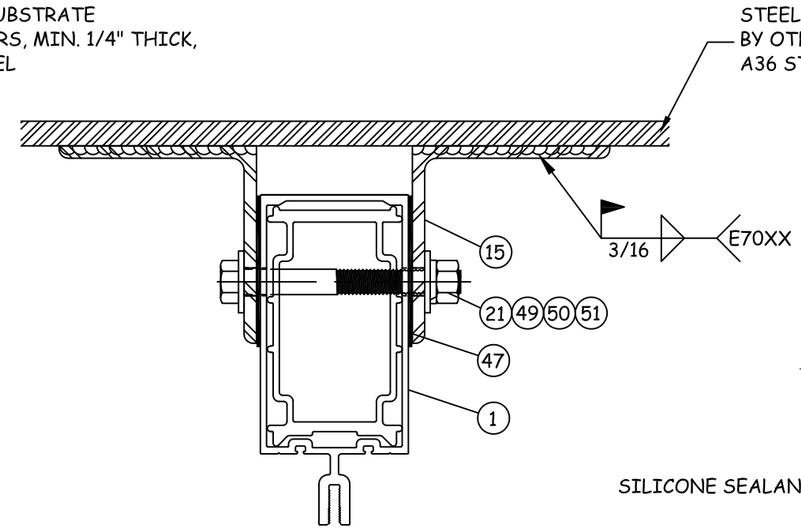

B 20 HORIZONTAL SECTION

WIND LOAD ANCHOR
AT VERTICAL MULLION

WIND LOAD ANCHOR NOTES:

1. WIND LOAD ANCHORS HAVE BEEN EVALUATED TO THE FOLLOWING:
   - WL = +/- 6,300 LBS (UNFACTORED) AT DOUBLE ANGLE SUPPORTS
   - WL = +/- 3,150 LBS (UNFACTORED) AT SINGLE ANGLE SUPPORTS
   - MAX. SPAN = 12'-6"
   - MAX. TRIB WIDTH = 74"

WL ANCHOR CAPACITY	
MAX. SPAN 'L'	MAX. DESIGN PRESSURE
150"	+/- 65 PSF

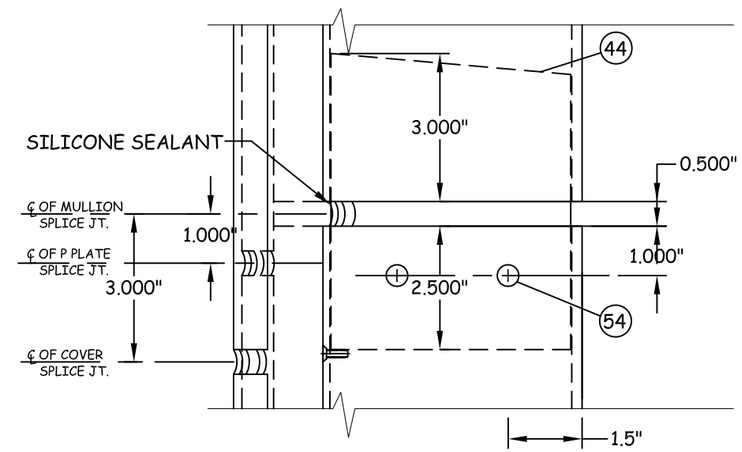

F 20 VERTICAL SECTION

WIND LOAD ANCHOR
STEEL SUBSTRATE

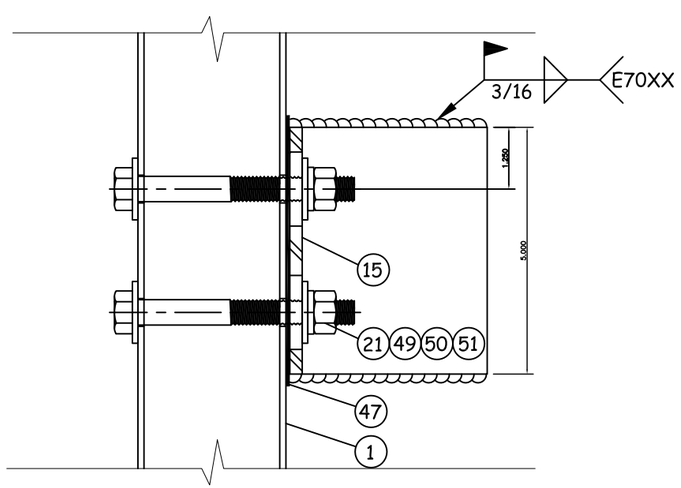

D 20 EXTERIOR VIEW

WIND LOAD ANCHOR
AT JAMB

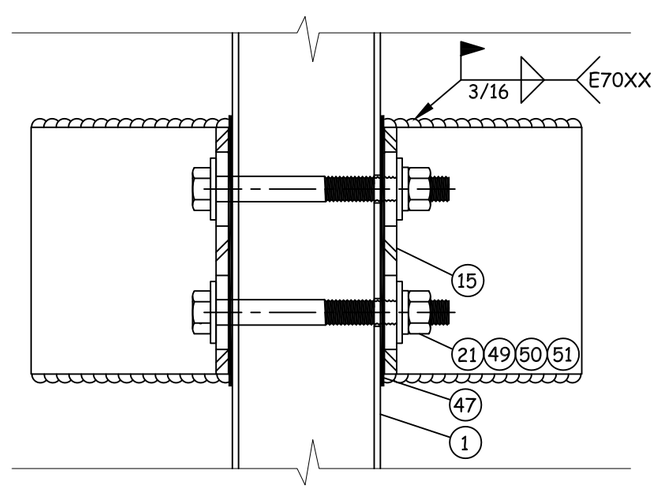

E 20 EXTERIOR VIEW

WIND LOAD ANCHOR
AT VERTICAL MULLION

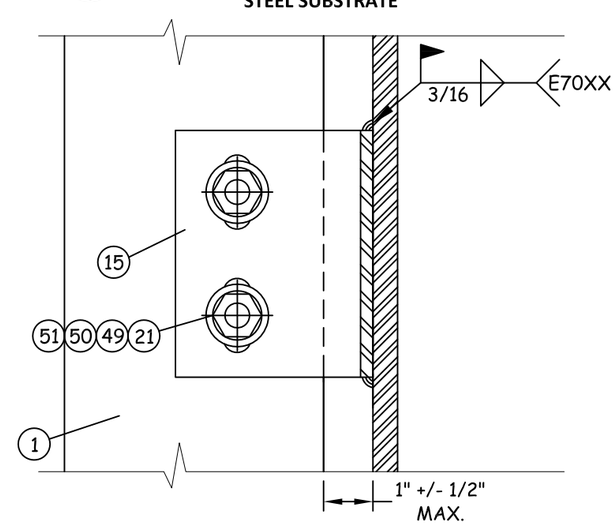

C 20 VERTICAL SECTION

WIND LOAD ANCHOR
STEEL SUBSTRATE

YKK AP AMERICA
1229 HWY 441 BYPASS
DUBLIN, GEORGIA 31021
PH: (478) 277-1955 FX: (678) 838-6001

TITLE: SERIES YHC 300 OG I.G. LOW PRESSURE CURTAIN WALL
WIND LOAD ANCHOR - WELDED, & SPLICE DETAILS

PREPARED BY:
BUILDING DROPS, INC.
398 E. DANIA BEACH BLVD. #338
DANIA BEACH, FL 33004
PH: (954) 399-8478 FX: (954) 744-4738

REVISIONS

NO.	DESCRIPTION	BY	DATE

STATE OF TEXAS
HERMES F. NORERO
118471
PROFESSIONAL ENGINEER

DATE: 09.18.14
DWN BY: SM
CHK BY: MSS
SCALE: NTS

DWG #: YKK044

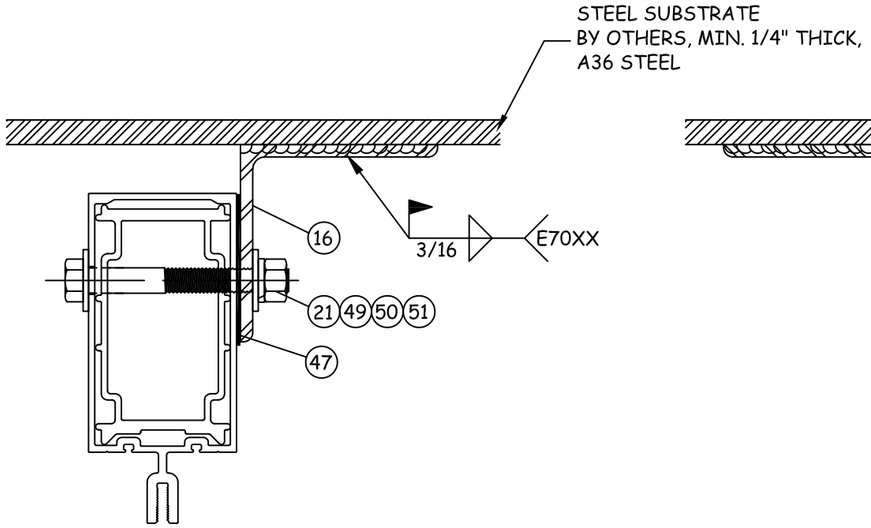

A/21 HORIZONTAL SECTION

DEAD LOAD ANCHOR AT JAMB

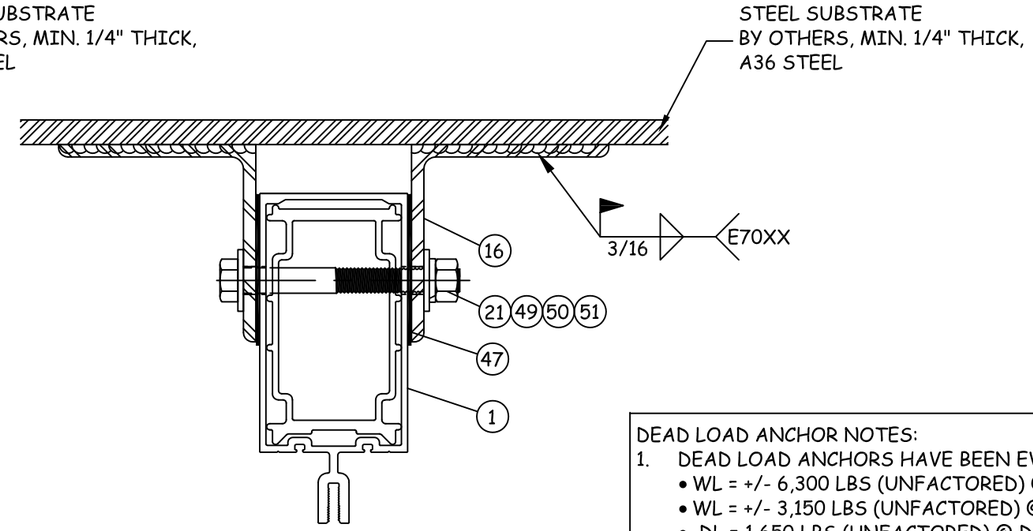

B/21 HORIZONTAL SECTION

DEAD LOAD ANCHOR AT VERTICAL MULLION

DEAD LOAD ANCHOR NOTES:

1. DEAD LOAD ANCHORS HAVE BEEN EVALUATED TO THE FOLLOWING:
   - WL = +/- 6,300 LBS (UNFACTORED) @ DOUBLE ANGLE SUPPORTS
   - WL = +/- 3,150 LBS (UNFACTORED) @ SINGLE ANGLE SUPPORTS
   - DL = 1,650 LBS (UNFACTORED) @ DOUBLE ANGLE SUPPORTS
   - DL = 825 LBS (UNFACTORED) @ SINGLE ANGLE SUPPORTS
   - MAX. SPAN = 12'-6"
   - MAX. TRIB WIDTH = 74"
   - DL SHALL BE DETERMINED BY ENGINEER OF RECORD.

DL ANCHOR CAPACITY	
MAX. SPAN 'L'	MAX. DESIGN PRESSURE
150"	+/- 65 PSF

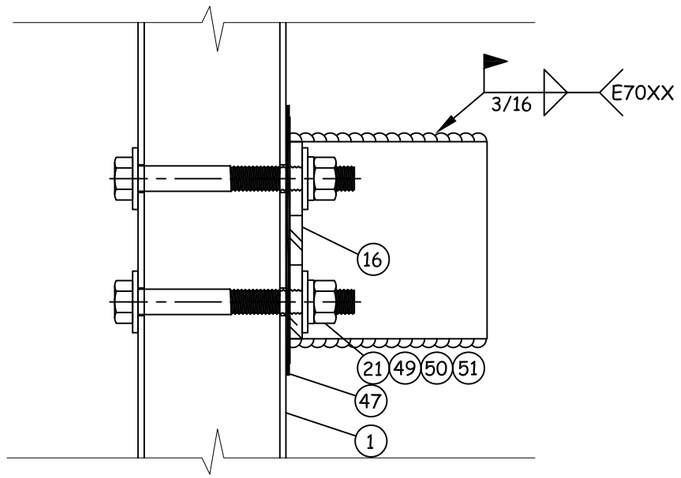

C/21 EXTERIOR VIEW

DEAD LOAD ANCHOR AT JAMB

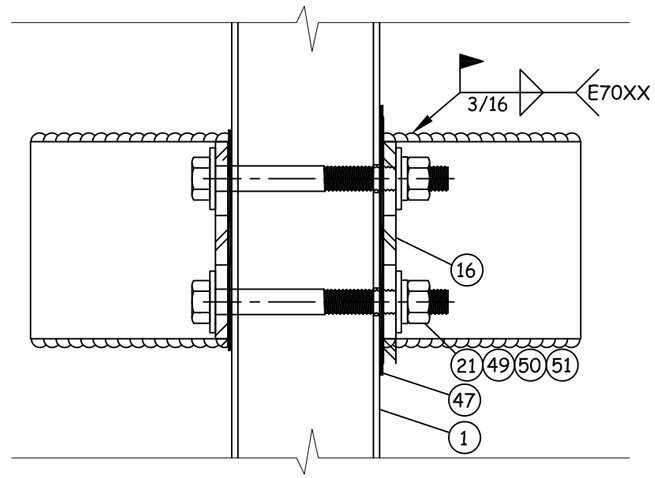

D/21 EXTERIOR VIEW

DEAD LOAD ANCHOR AT VERTICAL MULLION

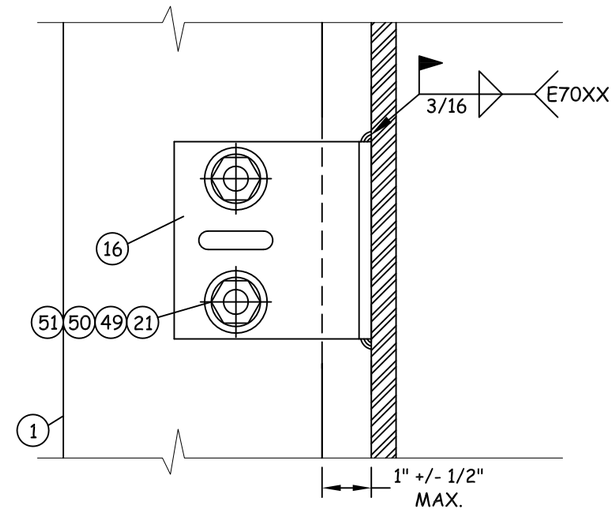

E/21 VERTICAL SECTION

DEAD LOAD ANCHOR STEEL SUBSTRATE

YKK AP AMERICA
1229 HWY 441 BYPASS
DUBLIN, GEORGIA 31021
PH: (478) 277-1955 FX: (678) 838-6001

TITLE: SERIES YHC 300 OG I.G. LOW PRESSURE CURTAIN WALL
DEAD LOAD ANCHOR DETAILS

PREPARED BY:
BUILDING DROPS, INC.
398 E. DANIA BEACH BLVD. #338
DANIA BEACH, FL 33004
PH: (954) 399-8478 FX: (954) 744-4738

REVISIONS

NO.	DESCRIPTION	BY	DATE

STATE OF TEXAS
HERMES F. NORERO
118471
PROFESSIONAL ENGINEER

DATE: 09.18.14
DWN BY: SM
CHK BY: MSS
SCALE: NTS

DWG #: YKK044

SHEET: 21 OF 30

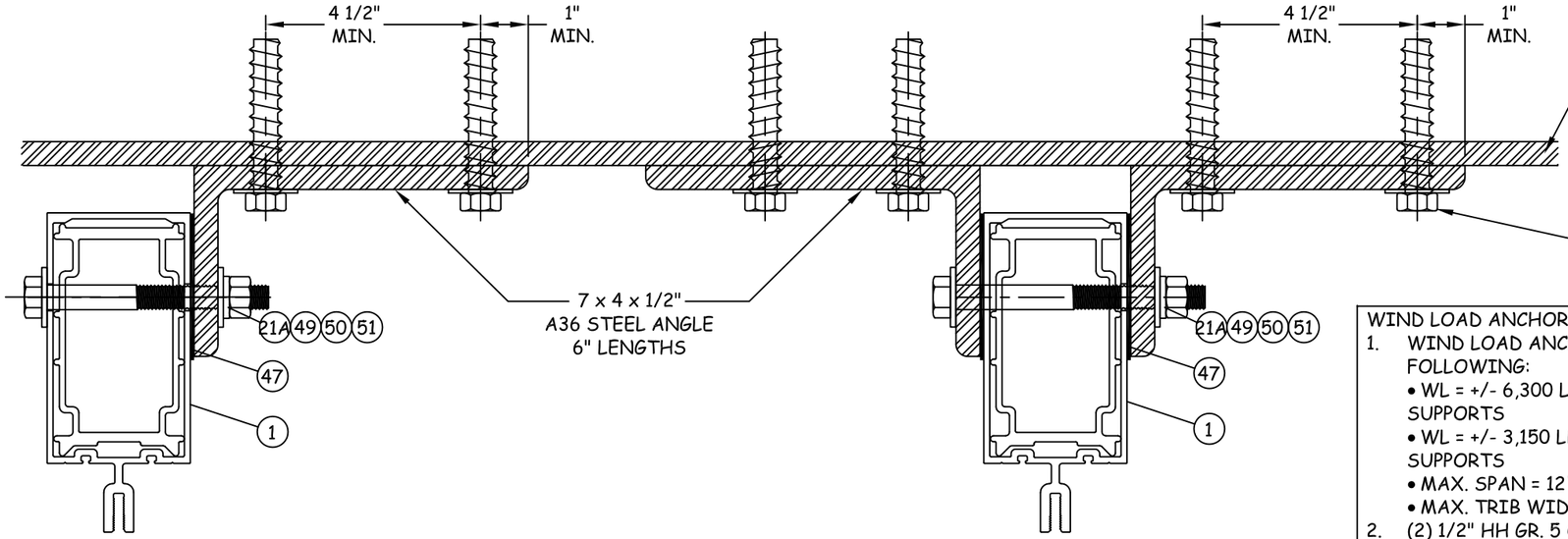

A 22 HORIZONTAL SECTION

WIND LOAD ANCHOR AT JAMB

B 22 HORIZONTAL SECTION

WIND LOAD ANCHOR AT VERTICAL MULLION

WIND LOAD ANCHOR NOTES:

1. WIND LOAD ANCHORS HAVE BEEN EVALUATED TO THE FOLLOWING:
   - WL = +/- 6,300 LBS (UNFACTORED) @ DOUBLE ANGLE SUPPORTS
   - WL = +/- 3,150 LBS (UNFACTORED) @ SINGLE ANGLE SUPPORTS
   - MAX. SPAN = 12'-6"
   - MAX. TRIB WIDTH = 74"
2. (2) 1/2" HH GR. 5 OR ASTM A325 THREADED BOLTS PER ANGLE
   - MIN. FULL ENGAGEMENT WITH NUT & WASHER OR
   - THREADED INTO TAPPED HOLE W/ MIN. 3 THREADS PENETRATION BEYOND STEEL STRUCTURE
   - MIN. 1 1/2" EDGE DISTANCE.

WL ANCHOR CAPACITY	
MAX. SPAN 'L'	MAX. DESIGN PRESSURE
150"	+/- 65 PSF

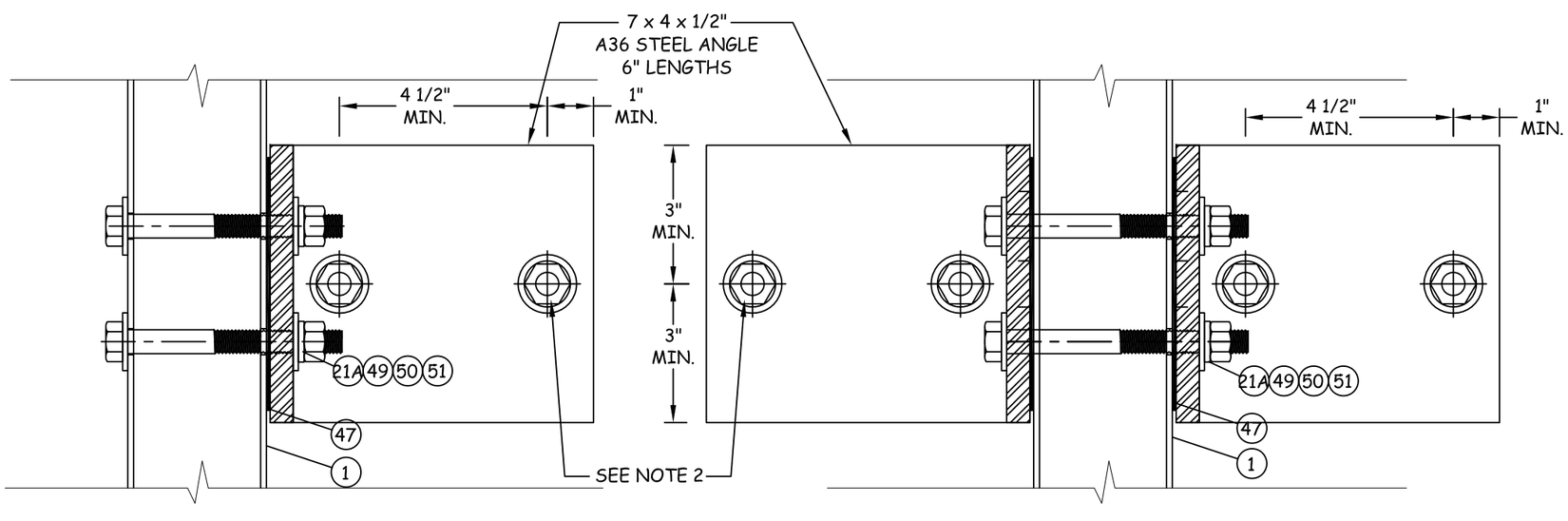

D 22 EXTERIOR VIEW

WIND LOAD ANCHOR AT JAMB

E 22 EXTERIOR VIEW

WIND LOAD ANCHOR AT VERTICAL MULLION

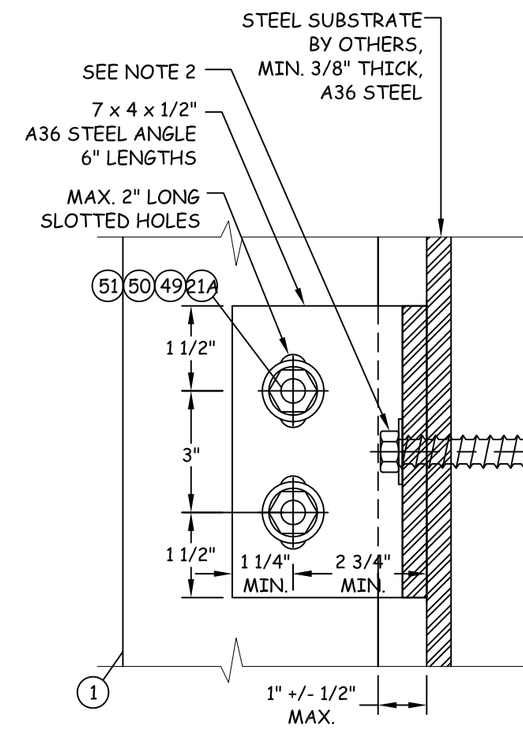

F 22 VERTICAL SECTION

WIND LOAD ANCHOR STEEL SUBSTRATE

YKK AP AMERICA
1229 HWY 441 BYPASS
DUBLIN, GEORGIA 31021
PH: (478) 277-1955 FX: (678) 838-6001

TITLE: SERIES YHC 300 OG I.G. LOW PRESSURE CURTAIN WALL
WIND LOAD ANCHOR DETAILS - BOLTED TO STEEL

PREPARED BY:
BUILDING DROPS, INC.
398 E. DANIA BEACH BLVD. #338
DANIA BEACH, FL 33004
PH: (954) 399-8478 FX: (954) 744-4738

REVISIONS

NO.	DESCRIPTION	BY	DATE

STATE OF TEXAS
HERMES F. NORERO
118471
PROFESSIONAL ENGINEER

DATE: 09.18.14	DWN BY: SM	CHK BY: MSS	SCALE: NTS

DWG #: YKK044

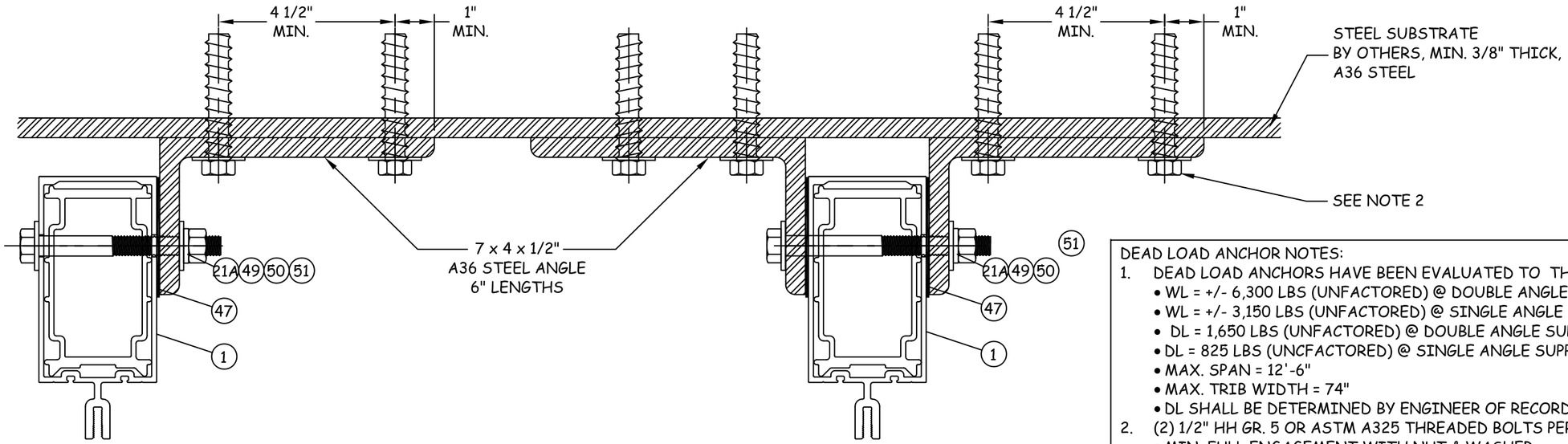

A 23 HORIZONTAL SECTION

DEAD LOAD ANCHOR AT JAMB

B 23 HORIZONTAL SECTION

DEAD LOAD ANCHOR AT VERTICAL MULLION

DL ANCHOR CAPACITY	
MAX. SPAN 'L'	MAX. DESIGN PRESSURE
150"	+/- 65 PSF

DEAD LOAD ANCHOR NOTES:

1. DEAD LOAD ANCHORS HAVE BEEN EVALUATED TO THE FOLLOWING:
   - WL = +/- 6,300 LBS (UNFACTORED) @ DOUBLE ANGLE SUPPORTS
   - WL = +/- 3,150 LBS (UNFACTORED) @ SINGLE ANGLE SUPPORTS
   - DL = 1,650 LBS (UNFACTORED) @ DOUBLE ANGLE SUPPORTS
   - DL = 825 LBS (UNCFACTORED) @ SINGLE ANGLE SUPPORTS
   - MAX. SPAN = 12'-6"
   - MAX. TRIB WIDTH = 74"
   - DL SHALL BE DETERMINED BY ENGINEER OF RECORD.
2. (2) 1/2" HH GR. 5 OR ASTM A325 THREADED BOLTS PER ANGLE
   - MIN. FULL ENGAGEMENT WITH NUT & WASHER
     OR
   - THREADED INTO TAPPED HOLE W/ MIN. 3 THREADS PENETRATION BEYOND STEEL STRUCTURE
   - MIN. 1 1/2" EDGE DISTANCE.

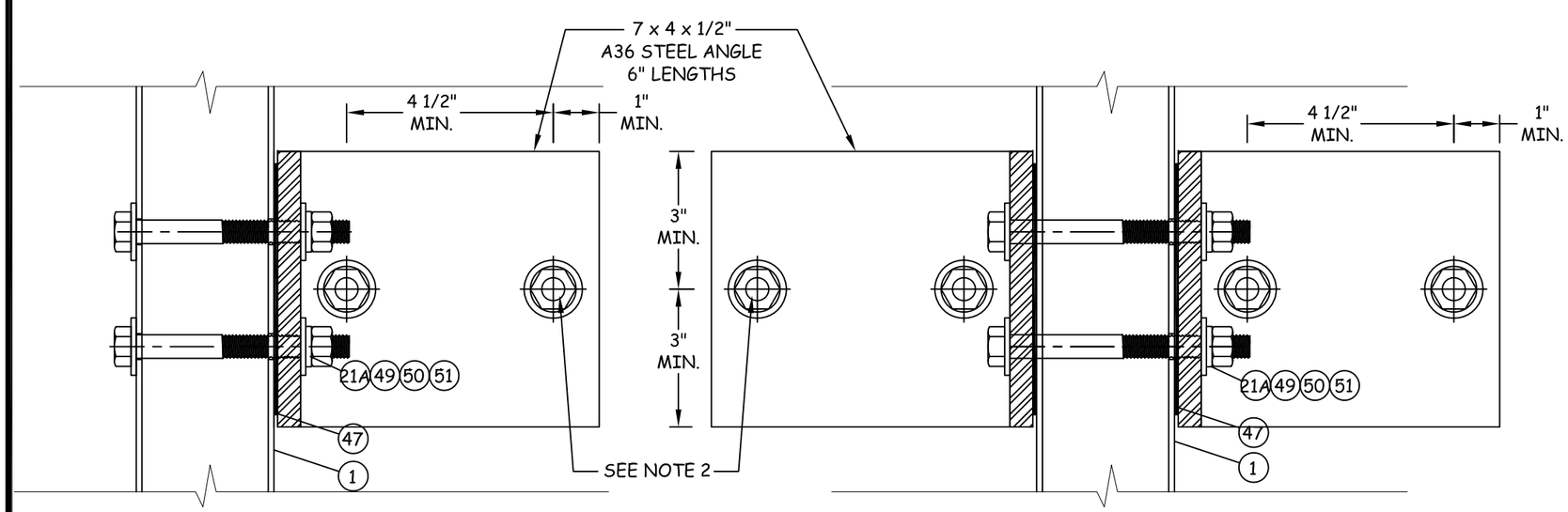

D 23 EXTERIOR VIEW

DEAD LOAD ANCHOR AT JAMB

E 23 EXTERIOR VIEW

DEAD LOAD ANCHOR AT VERTICAL MULLION

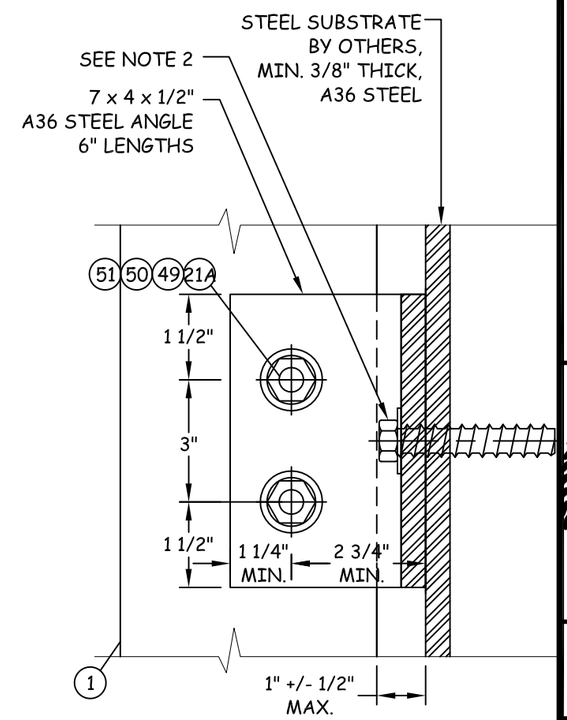

F 23 VERTICAL SECTION

DEAD LOAD ANCHOR STEEL SUBSTRATE

YKK AP AMERICA
1229 HWY 441 BYPASS
DUBLIN, GEORGIA 31021
PH: (478) 277-1955 FX: (678) 838-6001

TITLE: SERIES YHC 300 OG I.G. LOW PRESSURE CURTAIN WALL
DEAD LOAD ANCHOR DETAILS - BOLTED TO STEEL

PREPARED BY:
BUILDING DROPS, INC.
398 E. DANIA BEACH BLVD. #338
DANIA BEACH, FL 33004
PH: (954) 399-8478 FX: (954) 744-4738

REVISIONS

NO.	DESCRIPTION	BY	DATE

STATE OF TEXAS — HERMES F. NORERO — 118471 — PROFESSIONAL ENGINEER

DATE: 09.18.14	DWN BY: SM	CHK BY: MSS	SCALE: NTS

DWG #: YKK044

SHEET: 23 OF 30

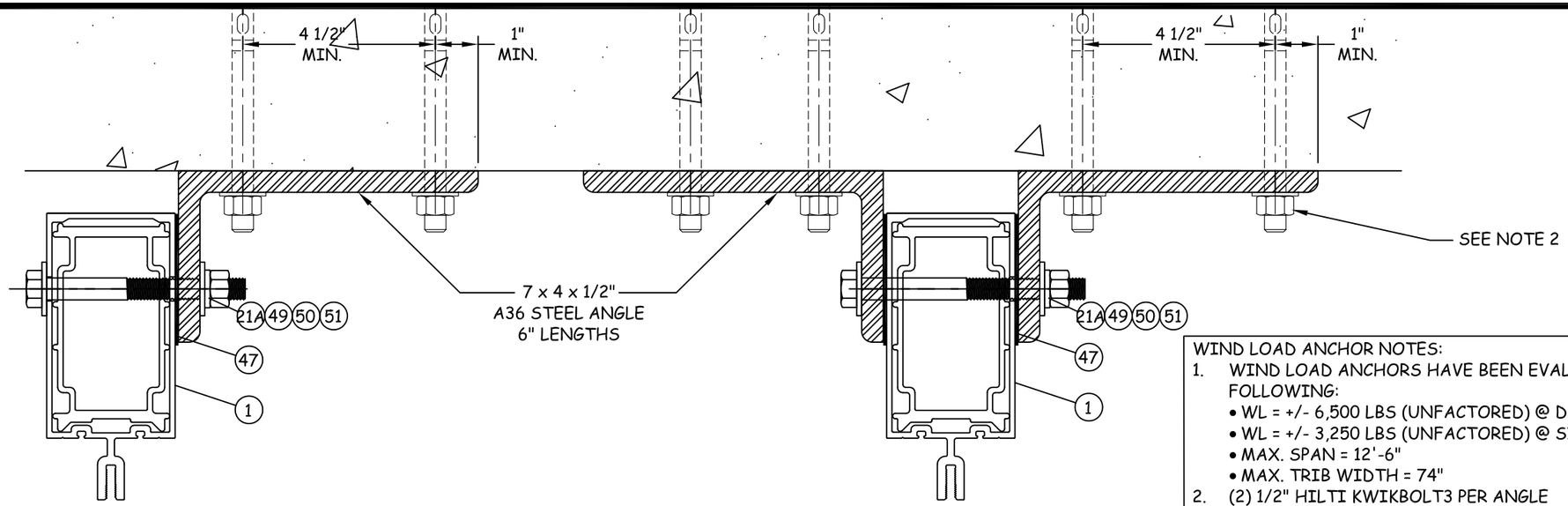

A/24 HORIZONTAL SECTION
WIND LOAD ANCHOR
AT JAMB

B/24 HORIZONTAL SECTION
WIND LOAD ANCHOR
AT VERTICAL MULLION

WIND LOAD ANCHOR NOTES:
1. WIND LOAD ANCHORS HAVE BEEN EVALUATED TO THE FOLLOWING:
   - WL = +/- 6,500 LBS (UNFACTORED) @ DOUBLE ANGLE SUPPORTS
   - WL = +/- 3,250 LBS (UNFACTORED) @ SINGLE ANGLE SUPPORTS
   - MAX. SPAN = 12'-6"
   - MAX. TRIB WIDTH = 74"
2. (2) 1/2" HILTI KWIKBOLT3 PER ANGLE
   - MIN. EMBEDMENT = 3 1/4"
   - MAX. C.C. SPACING = 4 1/2"
   - MIN. EDGE DISTANCE = 4"
   - MIN. 4000 PSI CONCRETE
3. FOR SLABS LESS THAN 8" IN THICKNESS, DESIGN MAY BE PROVIDED ON JOB TO JOB BASIS FOR REVIEW & APPROVAL BY AHJ

WL ANCHOR CAPACITY	
MAX. SPAN 'L'	MAX. DESIGN PRESSURE
150"	+/- 65 PSF

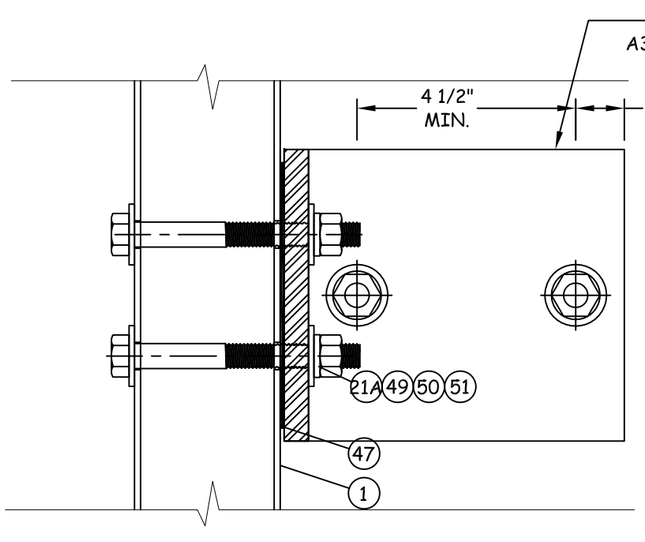

D/24 EXTERIOR VIEW
WIND LOAD ANCHOR
AT JAMB

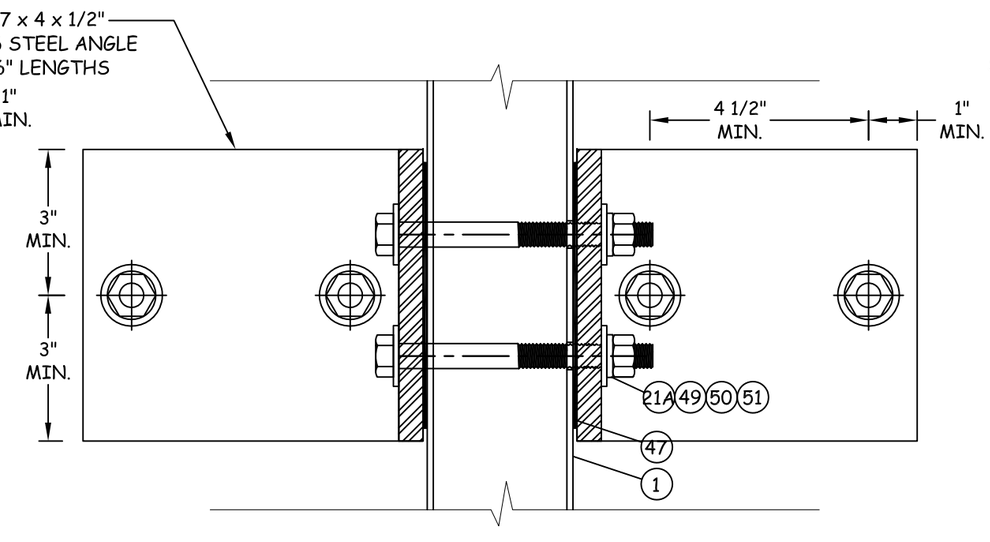

E/24 EXTERIOR VIEW
WIND LOAD ANCHOR
AT VERTICAL MULLION

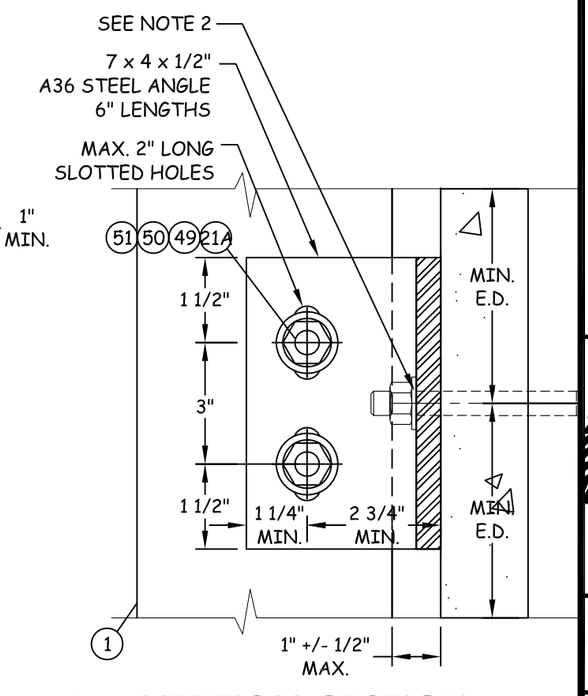

F/24 VERTICAL SECTION
WIND LOAD ANCHOR
STEEL SUBSTRATE

YKK AP AMERICA
1229 HWY 441 BYPASS
DUBLIN, GEORGIA 31021
PH: (478) 277-1955 FX: (678) 838-6001

TITLE: SERIES YHC 300 OG I.G. LOW PRESSURE CURTAIN WALL WIND LOAD ANCHOR DETAILS - ANCHOR TO CONCRETE

PREPARED BY:
BUILDING DROPS, INC.
398 E. DANIA BEACH BLVD. #338
DANIA BEACH, FL 33004
PH: (954) 399-8478 FX: (954) 744-4738

REVISIONS

NO.	DESCRIPTION	BY	DATE

STATE OF TEXAS
HERMES F. NORERO
118471
PROFESSIONAL ENGINEER

DATE: 09.18.14
DWN BY: SM
CHK BY: MSS
SCALE: NTS

DWG #: YKK044

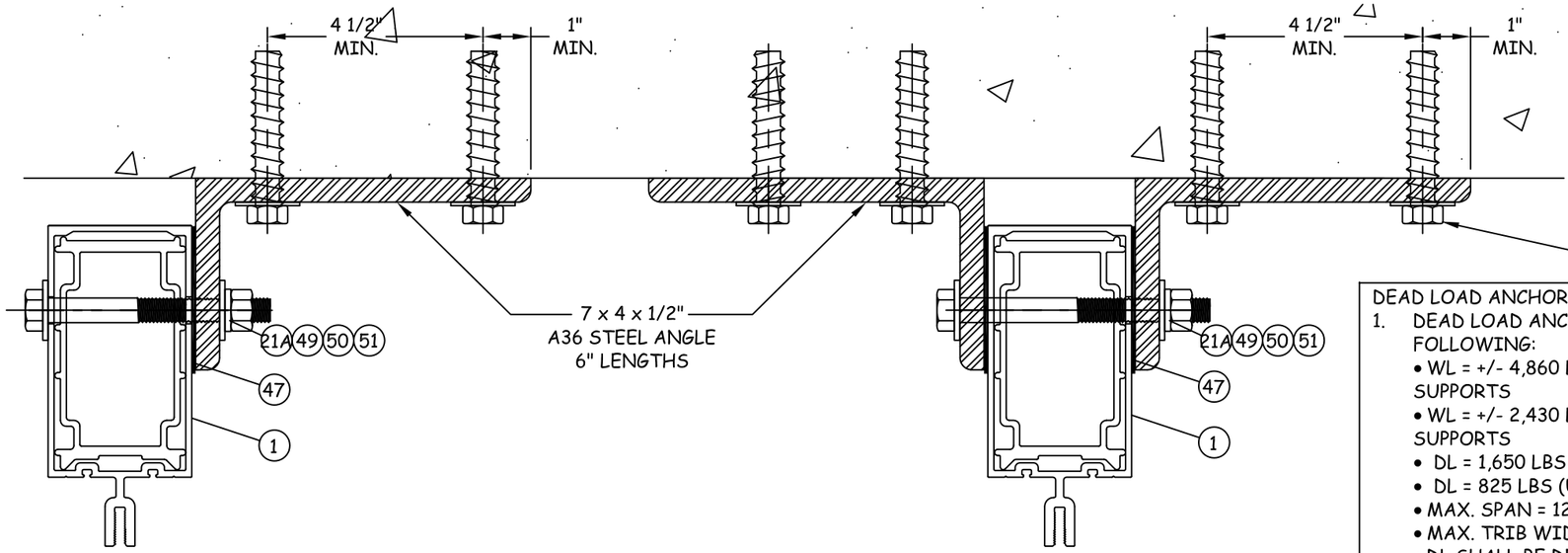

A/25 HORIZONTAL SECTION

DEAD LOAD ANCHOR AT JAMB

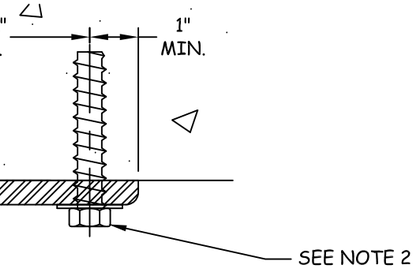

B/25 HORIZONTAL SECTION

DEAD LOAD ANCHOR AT VERTICAL MULLION

DL ANCHOR CAPACITY	
MAX. SPAN 'L'	MAX. DESIGN PRESSURE
114"	+/- 65 PSF
126"	+/- 60 PSF
138"	+/- 54.8 PSF
150"	+/- 50 PSF

DEAD LOAD ANCHOR NOTES:

1. DEAD LOAD ANCHORS HAVE BEEN EVALUATED TO THE FOLLOWING:
   - WL = +/- 4,860 LBS (UNFACTORED) @ DOUBLE ANGLE SUPPORTS
   - WL = +/- 2,430 LBS (UNFACTORED) @ SINGLE ANGLE SUPPORTS
   - DL = 1,650 LBS (UNFACTORED) @ DOUBLE ANGLE SUPPORTS
   - DL = 825 LBS (UNFACTORED) @ SINGLE ANGLE SUPPORTS
   - MAX. SPAN = 12'-6"
   - MAX. TRIB WIDTH = 74"
   - DL SHALL BE DETERMINED BY ENGINEER OF RECORD.
2. (2) 1/2" HILTI KWIKBOLT3 PER ANGLE
   - MIN. EMBEDMENT = 3 1/4"
   - MAX. C.C. SPACING = 4 1/2"
   - MIN. EDGE DISTANCE = 4"
   - MIN. 4000 PSI CONCRETE
3. FOR SLABS LESS THAN 8" IN THICKNESS, DESIGN MAY BE PROVIDED ON JOB TO JOB BASIS FOR REVIEW & APPROVAL BY AHJ

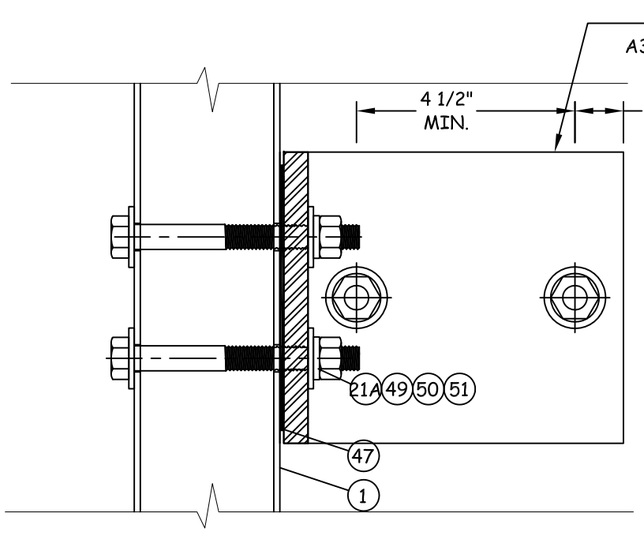

D/25 EXTERIOR VIEW

DEAD LOAD ANCHOR AT JAMB

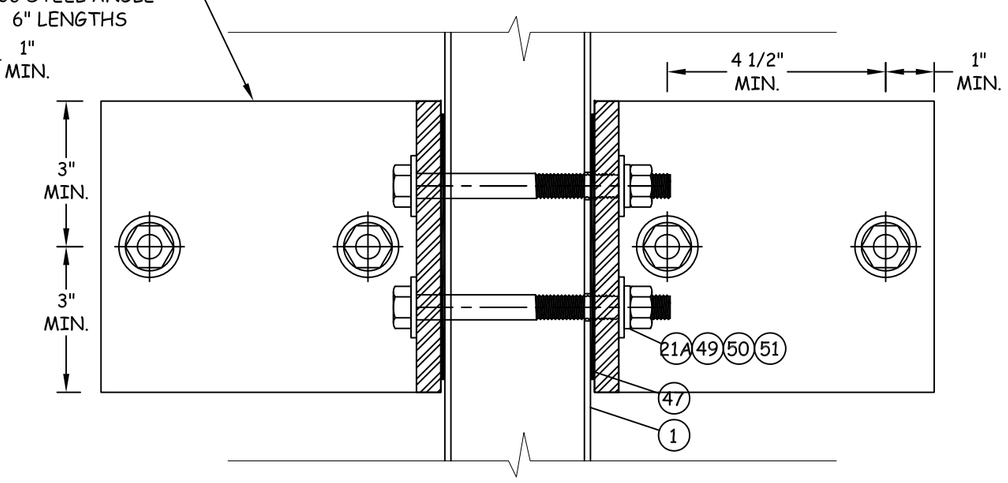

E/25 EXTERIOR VIEW

DEAD LOAD ANCHOR AT VERTICAL MULLION

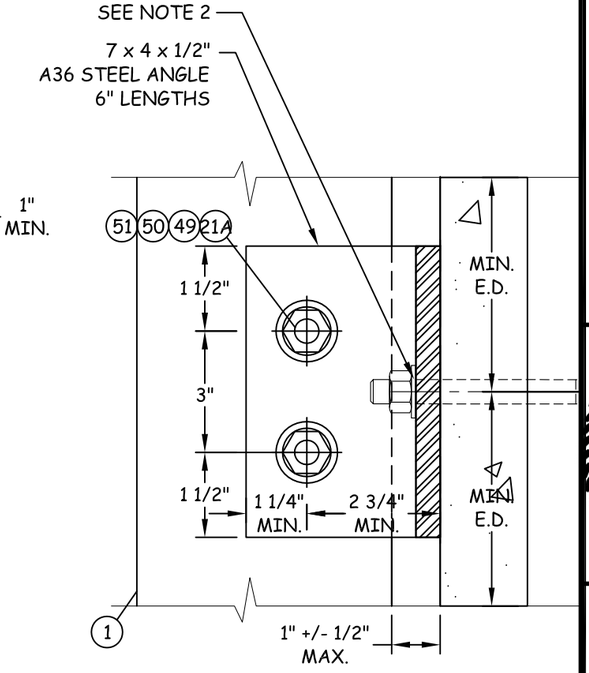

F/25 VERTICAL SECTION

DEAD LOAD ANCHOR STEEL SUBSTRATE

YKK AP AMERICA
1229 HWY 441 BYPASS
DUBLIN, GEORGIA 31021
PH: (478) 277-1955 FX: (678) 838-6001

TITLE: SERIES YHC 300 OG I.G. LOW PRESSURE CURTAIN WALL
DEAD LOAD ANCHOR DETAILS - ANCHOR TO CONCRETE

PREPARED BY:
BUILDING DROPS, INC.
398 E. DANIA BEACH BLVD. #338
DANIA BEACH, FL 33004
PH: (954) 399-8478 FX: (954) 744-4738

REVISIONS

NO.	DESCRIPTION	BY	DATE

STATE OF TEXAS
HERMES F. NORERO
118471
PROFESSIONAL ENGINEER

DATE: 09.18.14
DWN BY: SM
CHK BY: MSS
SCALE: NTS

DWG #: YKK044

SHEET: 25 OF 30

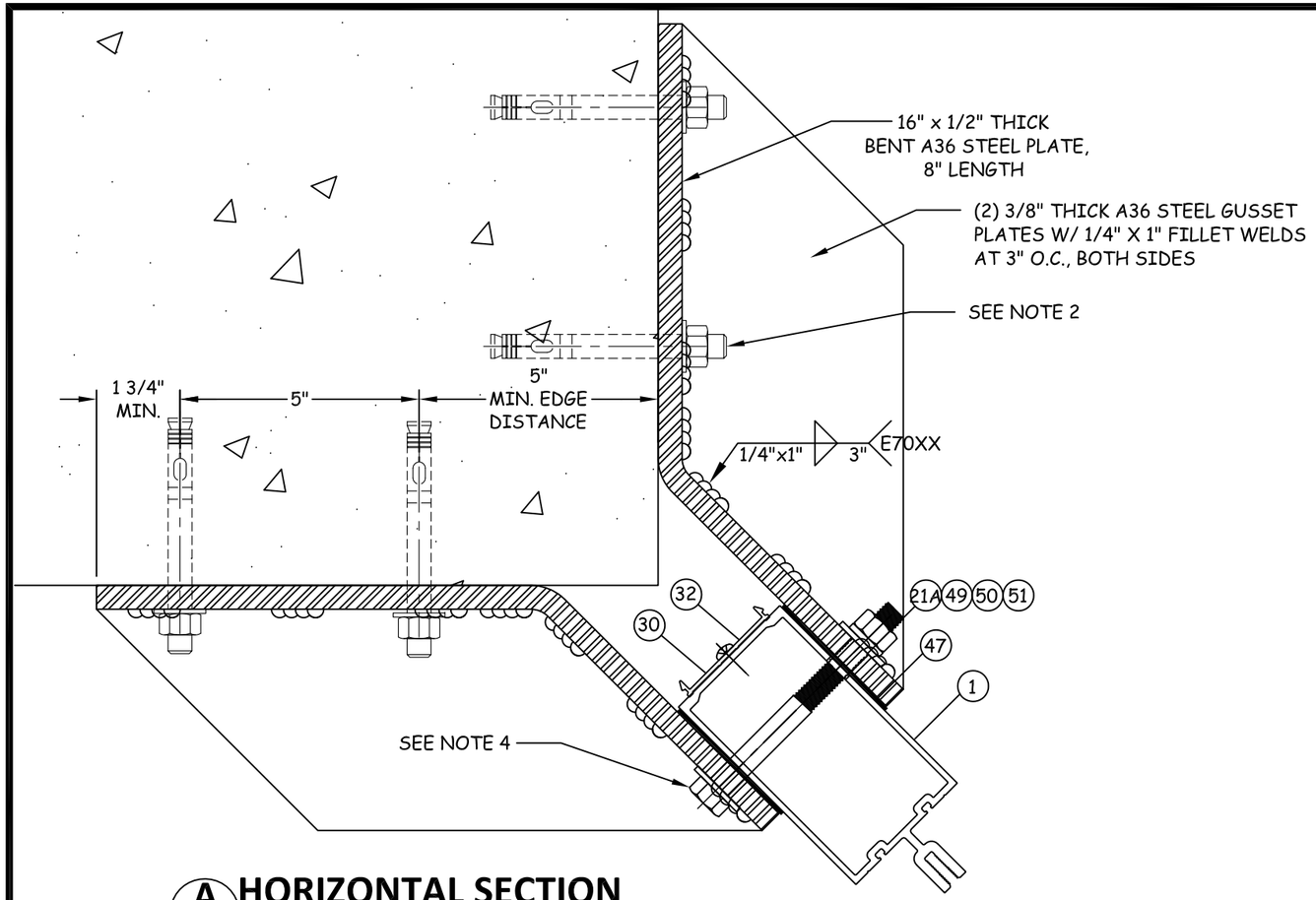

A 26 HORIZONTAL SECTION

OUTSIDE CORNER
WL OR DL ANCHOR

WL CORNER ANCHOR CAPACITY		
FRAME SIZE		DESIGN PRESSURES (+/- PSF)
MAX. SPAN 'L'	MAX. WIDTH 'W'	
120	60	65.00
	66	63.64
	74	56.76
126	60	65.00
	66	60.61
	74	54.05
132	54	65.00
	60	63.64
	66	57.85
	74	51.60
138	54	65.00
	60	60.87
	66	55.34
	74	49.35
144	48	65.00
	54	64.81
	60	58.33
	66	53.03
	74	47.30
150	48	65.00
	54	62.22
	60	56.00
	66	50.91
	74	45.41

DL CORNER ANCHOR CAPACITY		
FRAME SIZE		DESIGN PRESSURES (+/- PSF)
MAX. SPAN 'L'	MAX. WIDTH 'W'	
120	36	65.00
	42	62.86
	48	55.00
	54	48.89
	60	44.00
	66	40.00
	74	35.68
126	36	65.00
	42	59.86
	48	52.38
	54	46.56
	60	41.90
	66	38.10
	74	33.98
132	36	65.00
	42	57.14
	48	50.00
	54	44.44
	60	40.00
	66	36.36
	74	32.43
138	36	63.77
	42	54.66
	48	47.83
	54	42.51
	60	38.26
	66	34.78
	74	31.02
144	36	61.11
	42	52.38
	48	45.83
	54	40.74
	60	36.67
	66	33.33
	74	29.73
150	36	58.67
	42	50.29
	48	44.00
	54	39.11
	60	35.20
	66	32.00
	74	28.54

DEAD & WIND LOAD ANCHOR NOTES:

1. DEAD LOAD ANCHORS HAVE BEEN EVALUATED TO THE FOLLOWING:
   - DL = 1,219 LBS (UNFACTORED) @ DOUBLE ANGLE SUPPORTS
   - DL SHALL BE DETERMINED BY ENGINEER OF RECORD.
2. (2) 1/2" HILTI KWIKBOLT3 ANCHORS PER ANGLE
   - MIN. EMBEDMENT = 3 1/4"
   - MAX. C.C. SPACING = 4 1/2"
   - MIN. EDGE DISTANCE = 4"
   - MIN. 4000 PSI CONCRETE
3. FOR SLABS LESS THAN 8" IN THICKNESS, DESIGN MAY BE PROVIDED ON JOB TO JOB BASIS FOR REVIEW & APPROVAL BY AHJ
4. (2) BOLTS (ITEM #21A) SHALL BE THROUGH BOLTED IN STANDARD HOLES AT DEAD LOAD ANCHORS AND MAX. 2" LONG SLOTTED HOLTES AT WIND LOAD ANCHORS.

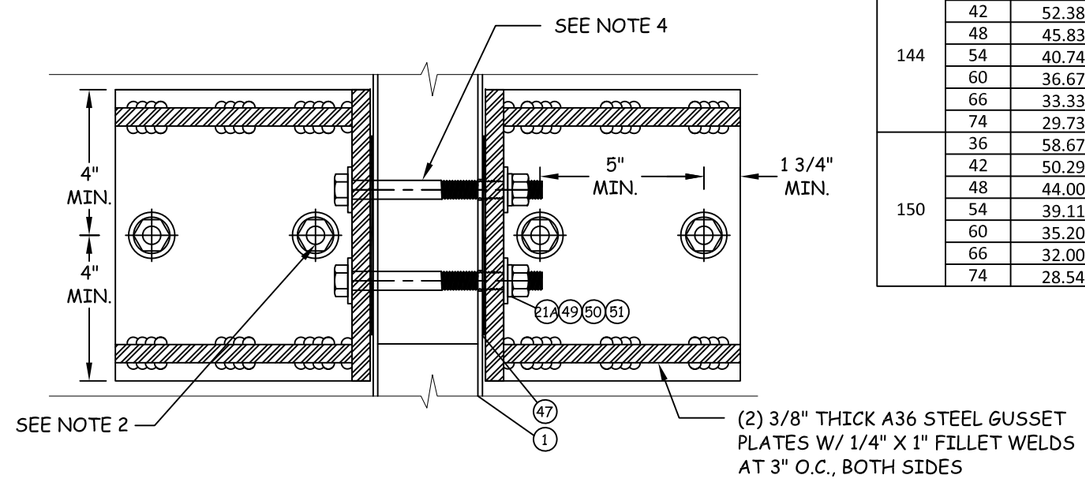

B 26 HORIZONTAL SECTION

OUTSIDE CORNER
WL OR DL ANCHOR

YKK AP AMERICA
1229 HWY 441 BYPASS
DUBLIN, GEORGIA 31021
PH: (478) 277-1955 FX: (678) 838-6001

TITLE: SERIES YHC 300 OG I.G. LOW PRESSURE CURTAIN WALL WL & DL CORNER ANCHOR DETAILS - ANCHOR TO CONC.

PREPARED BY:
BUILDING DROPS, INC.
398 E. DANIA BEACH BLVD. #338
DANIA BEACH, FL 33004
PH: (954) 399-8478 FX: (954) 744-4738

REVISIONS

NO.	DESCRIPTION	BY	DATE

STATE OF TEXAS
HERMES F. NORERO
118471
PROFESSIONAL ENGINEER

DATE: 09.18.14
DWN BY: SM
CHK BY: MSS
SCALE: NTS

DWG #: YKK044

SHEET: 26 OF 30

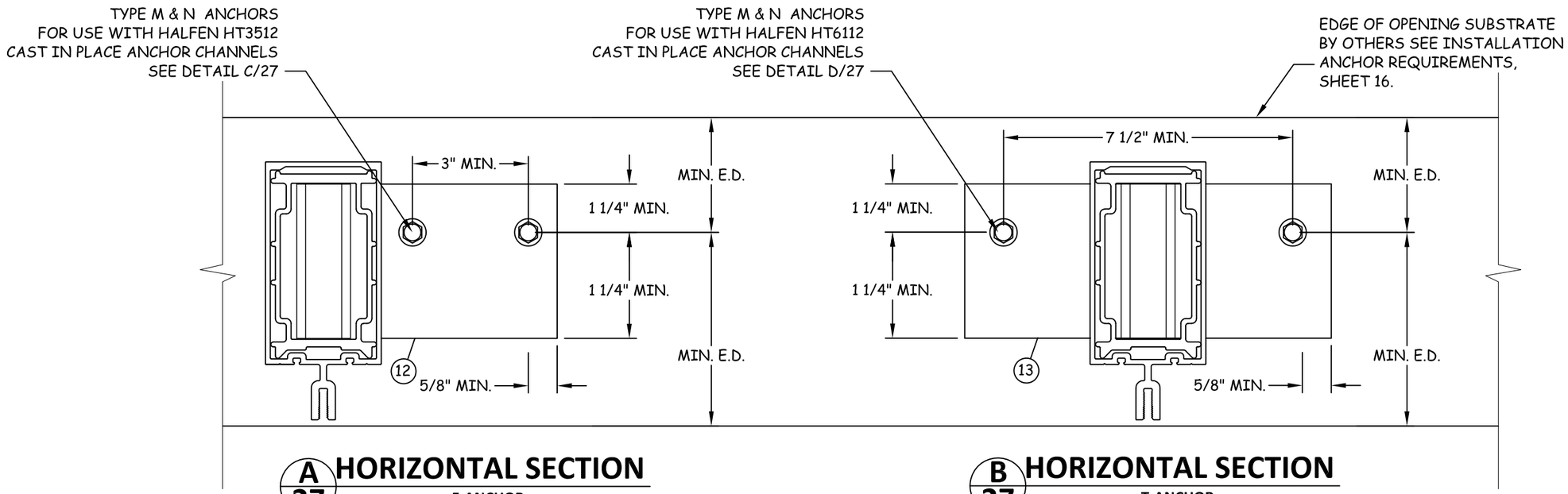

A 27 HORIZONTAL SECTION

F-ANCHOR
CONFIG 1

B 27 HORIZONTAL SECTION

T-ANCHOR
CONFIG 1

NOTE:

1. ANCHORS SHOWN HEREIN HAVE BEEN SPECIFIED PER ANCHOR MANUFACTURER'S RECOMMENDATIONS. CAST IN ANCHOR CHANNELS, HT3512 SHALL BE USED WITH F-ANCHORS AND HT6112 SHALL BE USED WITH T-ANCHORS.
2. ANCHOR BOLT EXTENSIONS MAY BE CLIPPED TO T.O. HEX NUT AND SHEAR BLOCKS MAY BE NOTCHED TO ALLOW FOR ANCHOR CLEARANCE.
3. REFER TO INSTALLATION ANCHOR REQUIREMENTS FOR MINIMUM EDGE DISTANCES (E.D.), EMBEDMENTS (EMBED), & PROPERTIES OF OPENING SUBSTRATE, SHEET 16.

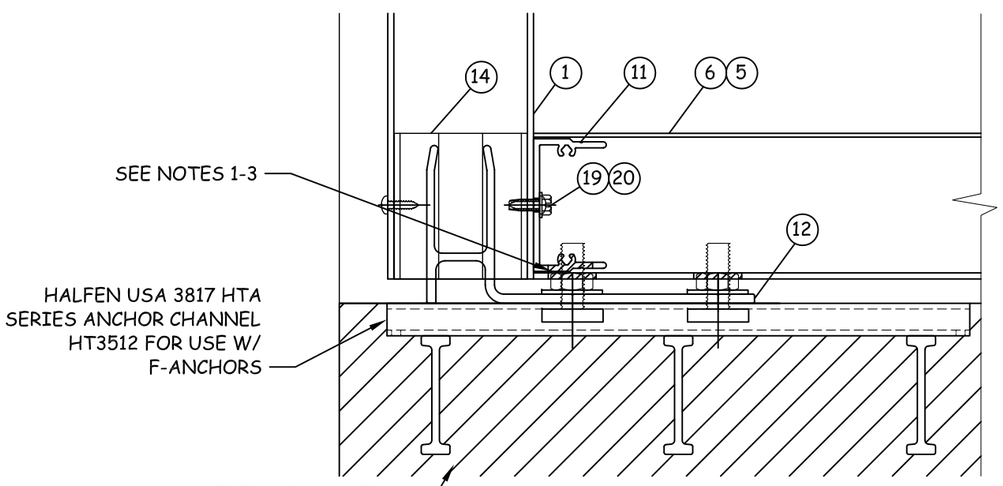

C 27 EXTERIOR VIEW

F-ANCHOR
TYPICAL

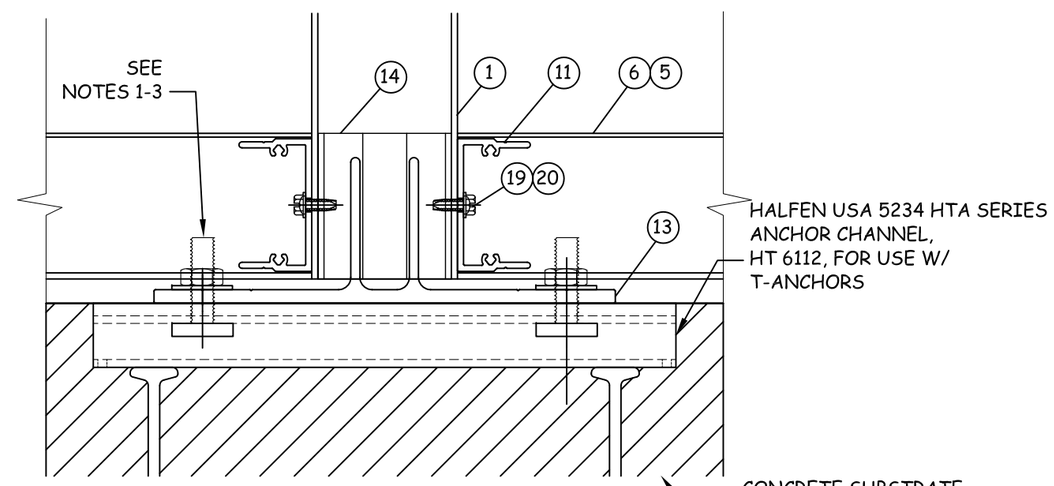

D 27 EXTERIOR VIEW

T-ANCHOR
TYPICAL

YKK AP AMERICA
1229 HWY 441 BYPASS
DUBLIN, GEORGIA 31021
PH: (478) 277-1955 FX: (678) 838-6001

TITLE: SERIES YHC 300 OG I.G. LOW PRESSURE CURTAIN WALL
HALFEN EMBED DETAILS

PREPARED BY:
BUILDING DROPS, INC.
398 E. DANIA BEACH BLVD. #338
DANIA BEACH, FL 33004
PH: (954) 399-8478 FX: (954) 744-4738

REVISIONS

NO.	DESCRIPTION	BY	DATE

STATE OF TEXAS
HERMES F. NORERO
118471
PROFESSIONAL ENGINEER

DATE: 09.18.14
DWN BY: SM
CHK BY: MSS
SCALE: NTS

DWG #: YKK044

SHEET: 27 OF 30

BILL OF MATERIALS			
ITEM	PART NO.	DESCRIPTION	MATERIAL
1	E9-3101	Standard Duty Mullion	6063-T6
2	AS-3178	Perimeter Pressure Plate	6063-T5
3	AS-3172	Pressure Plate	6063-T5
4	E9-3161	Jamb/Mullion Face Cover	6063-T5
5	E9-3162	Head/Sill Flush Filler	6063-T5
6	E9-3104	Standard Duty Head/Sill	6063-T5
7	E9-3102	Standard Duty Horizontal	6063-T5
8	E2-0379	Exterior Gasket	EPDM
9	E2-0353	Interior Gasket	EPDM
10	E2-0623	Setting Block	EPDM
11	E1-3001	Shear Block	6063-T5
12	E1-3004	F-Anchor	6063-T5
13	E1-3003	T-Anchor	6063-T5
14	E1-3006	Anchor Sleeve	6063-T5
15	E1-1204	Wind/Load Anchor	A36 STEEL
16	E1-1205	Dead/Load Anchor	A36 STEEL
17	HD-2520-W3	1/4" - 20 x 1-1/4" HWHMS @ 9" O.C.	
18	FC-1220	#12 x 1-1/4" FHSMS Type AB	
19	HF-2510-W1	1/4" - 20 x 5/8" PHSMS Type AB	
20	PC-1010	#10 x 5/8" PHSMS Type AB	
21	HM-5072	1/2" -13 X 4 1/2" HHMS Bolt Gr. 5	
21A	-	1/2" -13 HHMS Bolt of sufficient length to achieve full engagement w/ nut	SAE Gr. 5 or ASTM A325
22	PC-1210	#12 x 5/8" PHSMS @ 12" O.C.	
23	N/A	#10 x 3/4" TEK	
24	FC-1012	#10 x 3/4" FHSMS @ 18" O.C.	
25	PC-1010	#10 x 5/8" PHSMS @ 18" O.C.	
26	E1-0175	Steel Reinforcement	A36 STEEL
27	E9-3175	Corner Pressure Plate	6063-T5
28	E9-3145	Corner Adaptor	6063-T5
29	E9-3174	Corner Face Cover	6063-T5
30	E9-1280	Interior Snap-In Base Cover	6063-T5
31	E9-3165	Interior Mullion Cover @ Corner	6063-T5
32	E1-3018	#10 x 1/2" PHSMS	
33	E1-0910	Steel Angle (Deadload)	A36 STEEL
34	E1-0191	Steel Angle (Windload)	A36 STEEL
35	E1-3008	S-Anchor	6063-T5
36	E2-356	Isolator Tape	PVC
37	E2-0355	Joint Plus	EPDM
38	E9-3111	Light Duty Mullion	6063-T6
39	E9-3112	Light Duty Head/ Sill	6063-T5
40	E9-3113	Light Duty Horizontal	6063-T5
41	E9-8169	Light Duty Head/Sill Flush Filler	6063-T5
42	E1-3010	Mullion End Cap	AL. SHEET
43	E1-3036	Light Shear Block	6063-T5
44	E1-3005	Mullion Splice Sleeve	6063-T5
45	E1-3009	Face Cover Splice Sleeve	6063-T5
46	E1-3007	Mullion Sleeve	6063-T5
47	E3-0103	Nylon Slip Pad	NYLON
48	FC-1410	#14 x 5/8" FHSMS	
49	HM-5000	1/2" - 13 Hex Nut	
50	WS-5000	1/2" Lock Washer	
51	WW-5000	1/2" Flat Washer	
52	FF-0808	#8-32 x 1/2" FHTCS (F)	
53	N/A	#14 x 3-1/2" FHTCS (F)	
54	FC-1212	#12 x 3/4" FHSMS Type AB	
55	E2-0534	Side Block	EPDM
56	E2-0101	Isolator	EPDM
57	E1-3110	Pocket Filler	
58		NOT USED	
59	PC-1008	#10 x 3/4" PH SMS	
60	PC-1210	#12 x 5/8" PHSMS @ 18" O.C.	
61		#10 TEK @ 18" O.C.	

1 STANDARD DUTY MULLION/JAMB

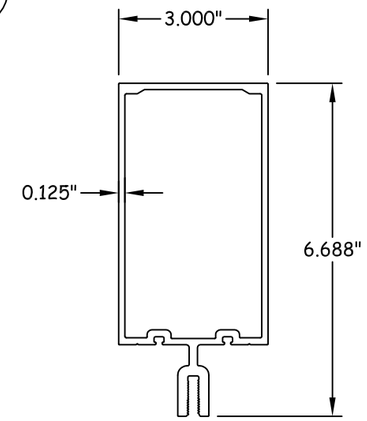

2 PERIMETER PRESSURE PLATE

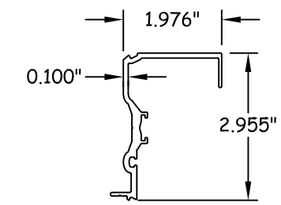

3 PRESSURE PLATE

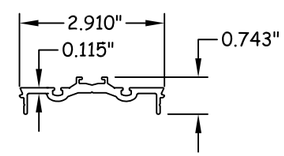

4 JAMB/MULLION FACE COVER

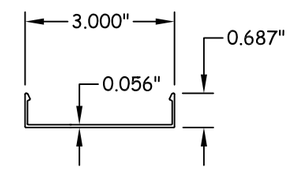

5 HEAD/SILL FLUSH FILLER

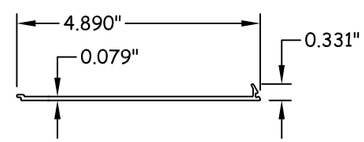

6 STANDARD DUTY HEAD/SILL

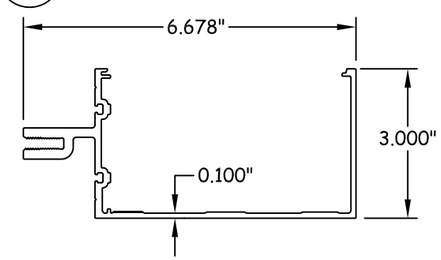

7 STANDARD DUTY HORIZONTAL

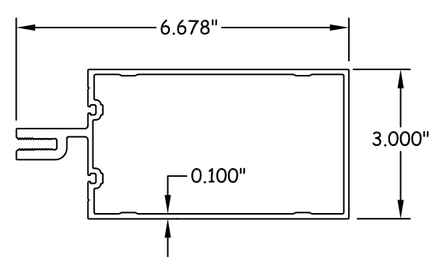

11 SHEAR BLOCK
E1-3001

43 SHEAR BLOCK
E1-3036

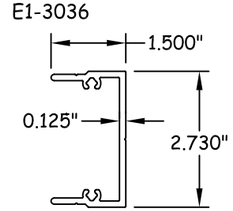

YKK AP AMERICA
1229 HWY 441 BYPASS
DUBLIN, GEORGIA 31021
PH: (478) 277-1955 FX: (678) 838-6001

TITLE: SERIES YHC 300 OG I.G. LOW PRESSURE CURTAIN WALL
BILLOF MATERIALS & COMPONENTS

PREPARED BY:
BUILDING DROPS, INC.
398 E. DANIA BEACH BLVD. #338
DANIA BEACH, FL 33004
PH: (954) 399-8478 FX: (954) 744-4738

REVISIONS

NO.	DESCRIPTION	BY	DATE

STATE OF TEXAS
HERMES F. NORERO
118471
PROFESSIONAL ENGINEER

DATE: 09.18.14
DWN BY: SM
CHK BY: MSS
SCALE: NTS

DWG #: YKK044

12 F-ANCHOR

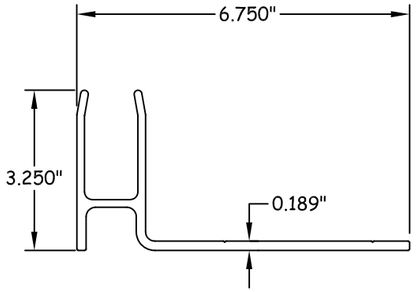

13 T-ANCHOR

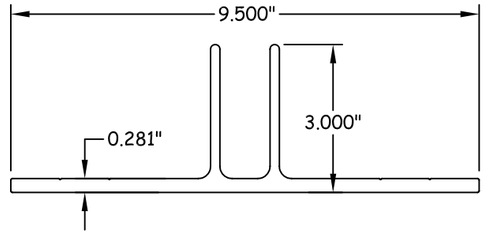

14 ANCHOR SLEEVE
AT TOP & BOTTOM OF VERTICALS

44 MULLION SPLICE SLEEVE
AT SPLICE

46 MULLION SLEEVE
AT MID-POINT ANCHOR

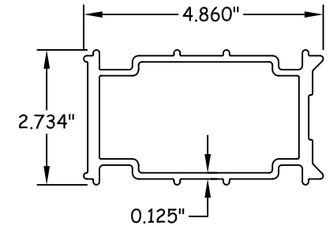

26 STEEL REINFORCEMENT

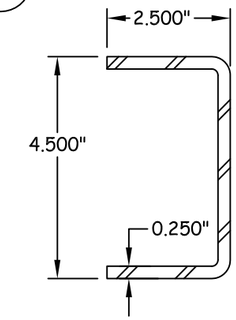

15 WIND LOAD ANCHOR

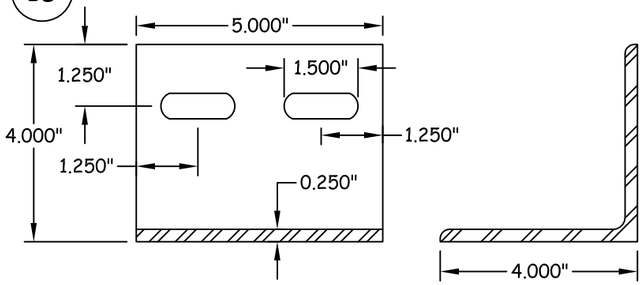

16 DEAD LOAD ANCHOR

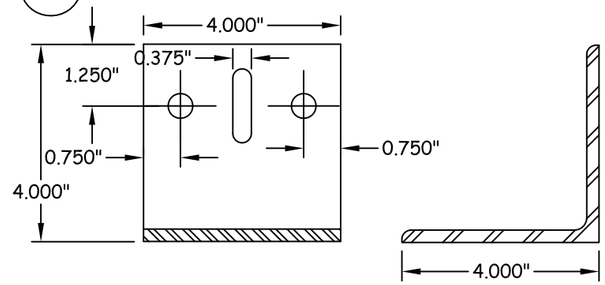

27 CORNER PRESSURE PLATE

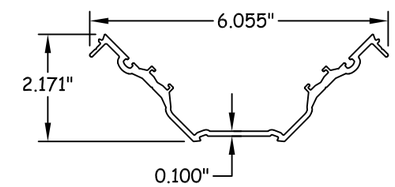

28 CORNER ADAPTOR

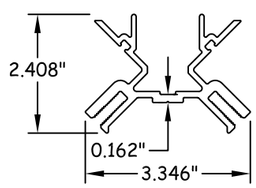

29 CORNER FACE COVER

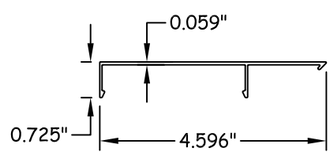

30 INTERIOR SNAP-IN BASE COVER

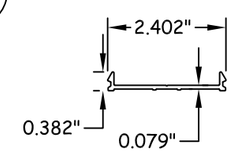

31 INTERIOR MULLION COVER
AT CORNER

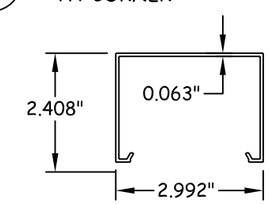

YKK AP AMERICA
1229 HWY 441 BYPASS
DUBLIN, GEORGIA 31021
PH: (478) 277-1955 FX: (678) 838-6001

TITLE: SERIES YHC 300 OG I.G. LOW PRESSURE CURTAIN WALL COMPONENTS (1)

PREPARED BY:
BUILDING DROPS, INC.
398 E. DANIA BEACH BLVD. #338
DANIA BEACH, FL 33004
PH: (954) 399-8478 FX: (954) 744-4738

REVISIONS

NO.	DESCRIPTION	BY	DATE

STATE OF TEXAS
HERMES F. NORERO
118471
PROFESSIONAL ENGINEER

DATE: 09.18.14
DWN BY: SM
CHK BY: MSS
SCALE: NTS

DWG #: YKK044

33 STEEL ANGLE
AT CORNER

34 STEEL ANGLE
AT CORNER

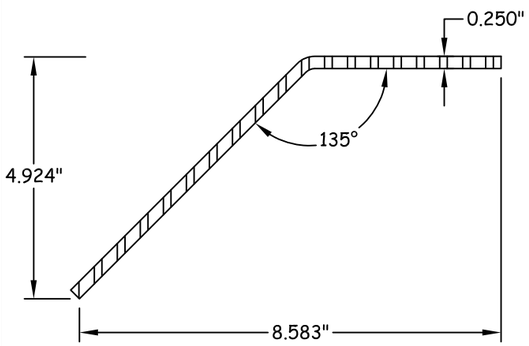

39 LIGHT DUTY HEAD/SILL

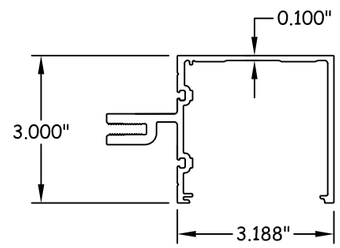

40 LIGHT DUTY HORIZONTAL

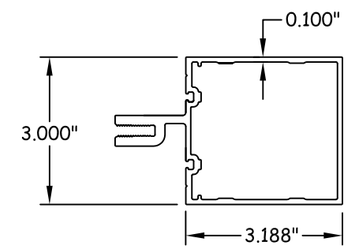

41 LIGHT HEAD/SILL FLUSH FILLER

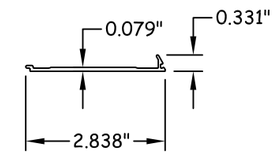

57 POCKET FILLER

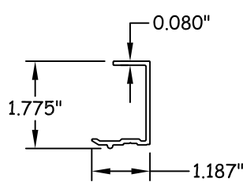

YKK AP AMERICA
1229 HWY 441 BYPASS
DUBLIN, GEORGIA 31021
PH: (478) 277-1955 FX: (678) 838-6001

TITLE: SERIES YHC 300 OG I.G.
LOW PRESSURE CURTAIN WALL
COMPONENTS (2)

PREPARED BY:
BUILDING DROPS, INC.
398 E. DANIA BEACH BLVD. #338
DANIA BEACH, FL 33004
PH: (954) 399-8478 FX: (954) 744-4738

REVISIONS

NO.	DESCRIPTION	BY	DATE

STATE OF TEXAS
HERMES F. NORERO
118471
PROFESSIONAL ENGINEER

DATE: 09.18.14
DWN BY: SM
CHK BY: MSS
SCALE: NTS

DWG #: YKK044

SHEET: 30 OF 30