GENERAL NOTES:

1. THESE CURTAIN WALL SYSTEMS HAVE BEEN TESTED, ANALYZED & APPROVED FOR DESIGN PRESSURES NOT TO EXCEED THOSE SHOWN IN THE "ALLOWABLE DESIGN PRESSURE TABLE(S).
2. OPENINGS, BUCKING & BUCKING FASTENERS MUST BE PROPERLY DESIGNED & INSTALLED TO TRANSFER WIND LOADS TO THE STRUCTURE.
3. ALL HARDWARE & FASTENERS SHALL BE IN ACCORDANCE WITH THESE DRAWINGS & SHALL NOT VARY UNLESS SPECIFICALLY MENTIONED ON THE DRAWINGS. SPECIFIED ANCHOR EMBED TO BASE MATERIAL SHALL BE BEYOND WALL FINISH OR STUCCO.
4. THE DETAILS & SPECIFICATIONS SHOWN HEREIN REPRESENT THE PRODUCTS TESTED & PROPOSED FOR WATER, AIR, IMPACT, CYCLIC & UNIFORM STATIC AIR PRESSURE TESTING IN CONFORMANCE WITH ASTM E330, E283, E331, E1886 & E1996 FOR LARGE MISSILE IMPACT CURTAIN WALL SYSTEMS.
5. THESE CURTAIN WALL SYSTEMS HAVE BEEN DESIGNED IN ACCORDANCE WITH AND MEET THE REQUIREMENTS OF THE INTERNATIONAL BUILDING CODE (IBC).
6. IMPACT SHUTTERS ARE NOT REQUIRED WITH THIS CURTAIN WALL SYSTEM.
7. ALL ANCHORS SECURING CURTAIN WALL FRAME TO PRESSURE TREATED BUCKS OR WOOD FRAMING SHALL BE CAPABLE OF RESISTING CORROSION CAUSED BY THE PRESSURE TREATING CHEMICALS IN THE WOOD.
8. DETERMINE THE POSITIVE & NEGATIVE DESIGN LOADS TO USE WHEN REFERENCING THESE DOCUMENTS IN ACCORDANCE WITH THE GOVERNING CODE AND GOVERNING WIND VELOCITY. FOR WIND LOAD CALCULATIONS IN ACCORDANCE WITH THE INTERNATIONAL BUILDING CODE, A DIRECTIONALITY FACTOR OF KD = 0.85 MAY BE APPLIED PER THE ASCE-7 STANDARD.
9. NO INCREASE IN ALLOWABLE STRESS HAS BEEN USED IN THE CERTIFICATION OF THIS PRODUCT. WIND LOAD DURATION FACTOR CD = 1.6 WAS USED FOR WOOD SCREW ANALYSIS ONLY.
10. MATERIALS, INCLUDING BUT NOT LIMITED TO STEEL SCREWS, THAT COME INTO CONTACT WITH OTHER DISSIMILAR MATERIALS SHALL BE SEPARATED OR COATED AS REQUIRED TO AVOID CORROSION OF EITHER MATERIAL.
11. THERE SHALL BE NO LIMIT TO THE NUMBER OF HORIZONTAL & VERTICAL PANELS USED FOR ANY JOB PROVIDING ALL RESTRICTIONS ARE MET PER THE ELEVATIONS.
12. TO THE BEST OF OUR KNOWLEDGE, THE CURTAIN WALL SYSTEMS SHOWN HEREIN ARE QUALITY ASSURED BY AN APPROVED CERTIFICATION/QA ENTITY & SHALL BE LABELED IN ACCORDANCE WITH APPLICABLE STANDARDS. THESE DRAWINGS SHOW ALL APPLICABLE ELEVATION, COMBINATION, INSTALLATION & COMPARATIVE ANALYSIS CONDITIONS AS DETERMINED THROUGH TESTING & ENGINEERING RATIONAL ANALYSIS. CURTAIN WALL ASSEMBLY SHALL BE IN ACCORDANCE WITH THESE DRAWINGS, THE MANUFACTURER'S QUALITY ASSURANCE SPECIFICATIONS & TESTING REPORTS.
13. CERTIFICATION OF THESE CURTAIN WALL SYSTEMS SHALL BE CONSIDERED VOID IF THEY ARE INSTALLED WITHOUT A BUILDING PERMIT FROM THE APPLICABLE LOCAL BUILDING DEPARTMENT OR IF THEY ARE INSTALLED BY ANYONE OTHER THAN A LICENSED CONTRACTOR EXPERIENCED WITH CURTAIN WALL INSTALLATIONS.

ANCHOR REQUIREMENTS TABLE (SINGLE SPAN REINFORCED & NON-REINFORCED CURTAIN WALL)

OPENING TYPE (SUBSTRATE)	FRAME/CLIP TO OPENING FASTENER TYPE	MINIMUM EMBED	MINIMUM EDGE DIST.
F-PERIMETER ANCHOR SCREWS			
MIN. 16 GA. 50 KSI METAL STUD	1/4-14 GR. 5 SELF TAP/DRILL SCREW	FULL	1/2"
MIN. 2X6 WOOD FRAME OR BUCK (MIN. GR. 2 & G=0.55)	1/4" DIA. GR. 5 COARSE THREAD SCREW	1 1/4"	3/4"
MIN. 1/8" THK A36 STEEL	1/4-14 OR 20 GR. 5 SELF TAP/DRILL SCREW	FULL	1/2"
MIN. 3000 PSI CONCRETE	(1) 3/8" CONCRETE SCREW ANCHOR	2 1/2"	2 1/2"
T, F & U-ANCHOR SCREWS/BOLTS (VERTICAL MEMBER ENDS)			
MIN. 1/4" THK A36 STEEL	3/8"-16 430 SS HCMS OR GR. 5 CS THREAD FORMING SCREW	FULL	3/4"
	3/8" GR. 5 CS OR 410 SS BOLT WITH LOCK WASHER & NUT	FULL	3/4"
	1/4-14 OR 20 GR. 5 SELF TAP/DRILL SCREW	FULL	1/2"
	1/4" GR. 5 CS OR 410 SS BOLT WITH LOCK WASHER & NUT	FULL	1/2"
	5/16-24 GR. 5 SELF TAP/DRILL SCREW	FULL	5/8"
	5/16" GR. 5 CS OR 410 SS BOLT WITH LOCK WASHER & NUT	FULL	5/8"
(2) MIN. 3000 PSI CONCRETE	(1) 1/2" CONCRETE SCREW ANCHOR	3 1/4"	SEE DETAILS

(1) 1/2" CONCRETE SCREWS SHALL BE SIMPSON STRONG-TIE TITAN HD SCREW ANCHOR (GALVANIZED STEEL).
(2) MINIMUM CONCRETE SLAB THICKNESS FOR PLACEMENT OF "T", "F" & "U" ANCHORS IS 6 3/4".

CORNER CONSTRUCTION:

ONE-PIECE VERTICAL AND HORIZONTAL FRAMING AND INTERMEDIATES: VERTICAL MEMBERS RUN THROUGH WHILE THE HORIZONTAL MEMBERS ARE SQUARE CUT, BUTTED AND MECHANICALLY FASTENED TO THE VERTICAL MEMBERS VIA A SHEAR BLOCK (ITEM #9). THE SHEAR BLOCK IS MECHANICALLY FASTENED TO THE VERTICAL FRAME MEMBER WITH 4 NO. 12 X 7/16" PHTF SCREWS. THE HORIZONTAL FRAME MEMBERS ARE ATTACHED TO THE SHEAR BLOCK WITH 2 NO. 12 X 1 1/2" FHTF SCREWS. CORNERS ARE SEALED WITH DOW 795 SILICONE SEALANT.
TWO-PIECE VERTICAL AND HORIZONTAL FRAMING AND INTERMEDIATES: VERTICAL MEMBERS RUN THROUGH WHILE THE HORIZONTAL MEMBERS ARE SQUARE CUT, BUTTED AND MECHANICALLY FASTENED TO THE VERTICAL MEMBERS VIA A SHEAR BLOCK (ITEM #9). THE SHEAR BLOCK IS MECHANICALLY FASTENED TO THE VERTICAL FRAME MEMBER WITH 4 NO. 12 X 7/16" PHTF SCREWS & . THE HORIZONTAL FRAME MEMBERS ARE ATTACHED TO THE SHEAR BLOCK WITH 2 FH & 2 PH NO. 12 X 1 1/2" FHTF SCREWS. CORNERS ARE SEALED WITH DOW 795 SILICONE SEALANT.

GLASS D.L.O. SIZE VS. PRESSURE

GLASS OPTIONS	MAXIMUM D.L.O. WIDTH	MAXIMUM D.L.O. HEIGHT	ALLOWABLE DESIGN PRESSURE
1, 2, 3, 6 & 7	58 1/2"	93 1/2"	+/-90 PSF
	57 3/4"	94 3/4"	+/-90 PSF
	73 3/4"	54 5/8"	+/-90 PSF
4 & 5	58 1/2"	93 1/2"	+/-65 PSF
	57 3/4"	94 3/4"	+/-65 PSF
	73 3/4"	54 5/8"	+/-65 PSF
8	58 1/2"	93 1/2"	+/-110 PSF
	57 3/4"	94 3/4"	+/-110 PSF
	73 3/4"	54 5/8"	+/-110 PSF
SEE GLAZING DETAILS FOR GLASS OPTIONS			
HEIGHT & WIDTH MAY NOT BE INTERCHANGED!			

ANCHOR LEGEND

ANCHOR SYMBOL	ANCHOR DESCRIPTION
⊞	STANDARD WIND LOAD ANCHOR
◘	STANDARD T-ANCHOR
✥	DOOR JAMB U-ANCHOR
◭	F-ANCHOR (FRAME MEMBER ENDS)
SEE SHEETS 4-6 FOR DETAILS OF ANCHORS	

EVALUATION OF THIS PRODUCT IS BASED ON APPLICABLE STANDARDS AND/OR INFORMATION & RESULTS FROM APPLICABLE TEST REPORTS. THE BUILDING CODE VERSION CONSIDERED WITH THIS EVALUATION WAS THAT IN FORCE AT THE TIME OF THE EVALUATION. IN THE EVENT OF CODE VERSION CHANGES/UPDATES OR IN THE EVENT THAT NEW OR ADDITIONAL TESTING IS COMPLETED ON THIS PRODUCT, PRIOR TO STATING CODE COMPLIANCE, THE MANUFACTURER SHALL CONFIRM WITH THE EVALUATION ENGINEER OF RECORD THAT EVERYTHING SPECIFIED HERE-IN IS CURRENT WITH ALL CURRENT TESTING, CODES AND APPLICABLE STANDARDS.

THESE DRAWINGS ARE APPLICABLE ONLY TO THE PRODUCT SPECIFIED. THEY MAY NOT BE USED FOR THE ASSEMBLY AND/OR INSTALLATION OF ANY OTHER PRODUCT NOR MAY THEY BE USED FOR RATIONAL AND/OR LOCAL APPROVAL OF ANY PRODUCT NOT PRODUCED BY THE MANUFACTURER STATED ON THESE DRAWINGS.

DRAWN BY: W.W.S. | CHECKED BY: W.W.S.
PLOT: 1=48 | DATE: 03/16/13

NO.	REVISION DESCRIPTION	BY	DATE
A1	UPDATE GLASS DESCRIPTION	W.W.S.	09/06/16

DRAWING TITLE: 10 13/16" DEEP 1600 SYSTEM 1 CURTAIN WALL (L.M.I.)

JOB INFORMATION: KAWNEER COMPANY, INC. 555 GUTHRIDGE COURT NORCROSS, GA 30092 770-449-5555

CONSULTANTS: W. W. SCHAEFER ENGINEERING & CONSULTING, P.A. (REG. NO. F-14980)
7480 150TH COURT NORTH
PALM BEACH GARDENS, FL 33418
PHONE: 561-744-3424

STATE OF TEXAS — WARREN W. SCHAEFER — 113497 — LICENSED PROFESSIONAL ENGINEER

CERTIFICATION: SEP 07 2016
WARREN W. SCHAEFER, P.E.
P.E. NO. 113497

DRAWING NO. 1794T | REV. A
SHEET NO. 1 OF 12

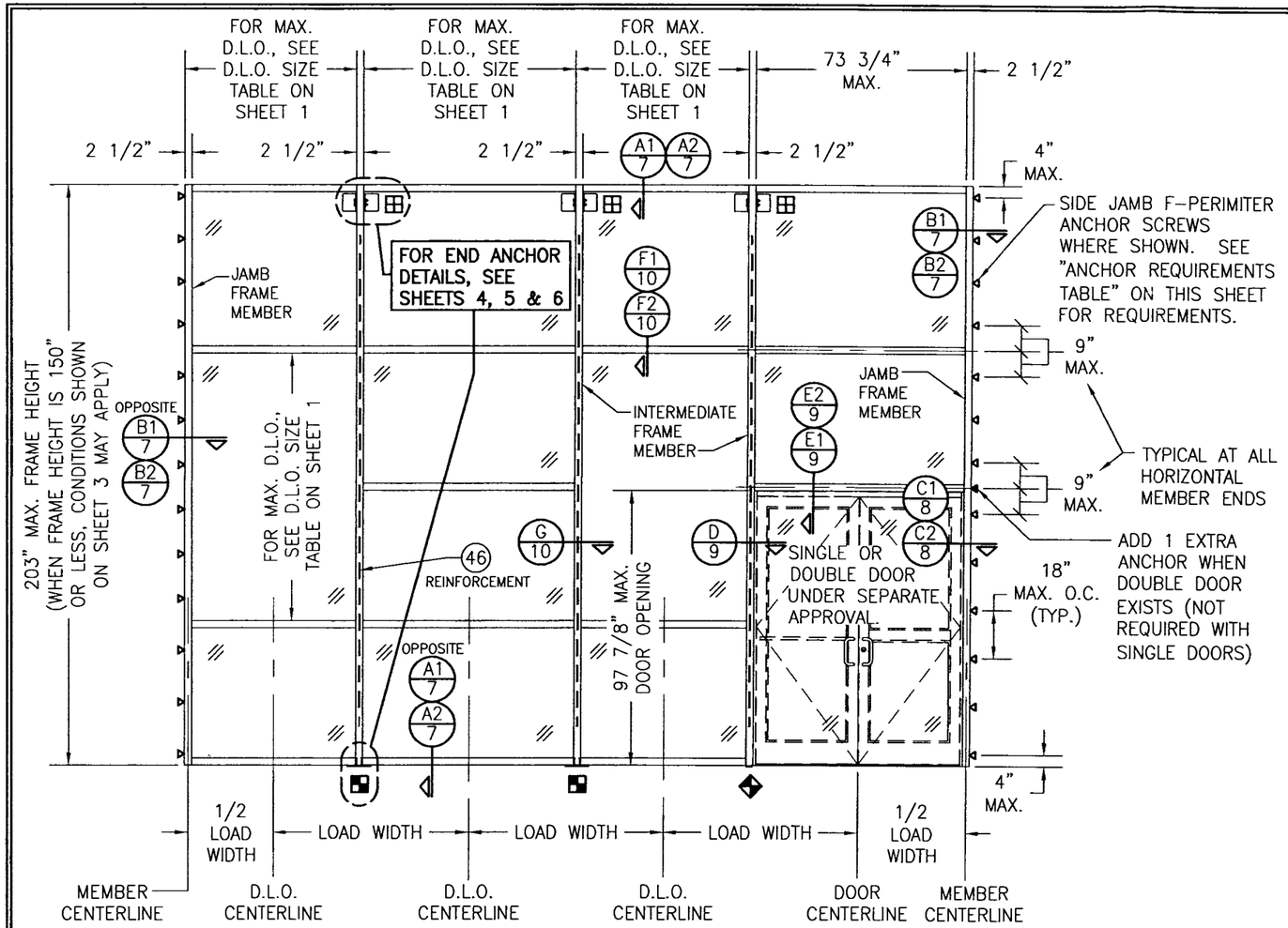

EXTERIOR ELEVATION: SINGLE-SPAN REINFORCED CURTAIN WALL

SCALE: 1/4" = 1'-0"

ALLOWABLE DESIGN PRESSURE (SINGLE SPAN NON-REINFORCED CURTAIN WALL)

MAXIMUM MULLION SPAN (IN.)	MAXIMUM LOAD WIDTH (IN.)	ALLOWABLE PRESSURE (POS & NEG PSF)
203	76 1/4	81.0
	72	85.8
	68 5/8	90.0
	62	99.6
	56	110.0
192	76 1/4	85.6
	72	90.7
	68 5/8	95.2
	62	105.3
	59	110.0
180 & LESS	76 1/4	90.0
	72	95.3
	68 5/8	100.0
	62	110.0

NOTES:
1. SEE ELEVATION FOR DIMENSIONING OF LOAD WIDTH.
2. PRESSURES SHOWN ARE SPECIFIC TO EACH INDIVIDUAL MULLION SUPPORT AREA. ALLOWABLE PRESSURE MAY VARY FROM BAY TO BAY AS DICTATED BY EACH INDIVIDUAL MULLION CONDITION.
3. LESSER OF PRESSURES STATED IN THIS TABLE & THE ALLOWABLE GLASS PRESSURE, AS SHOWN ON SHEET 1, SHALL CONTROL AS ALLOWABLE FOR THE WALL ASSEMBLY.
4. AT SPAN OF 180" & LESS, LOAD WIDTH CONTROLS THE ALLOWABLE PRESSURE. THEREFORE, IT SHALL NOT BE ASSUMED THAT INTERPRETATION OF PRESSURE VALUES CAN BE DONE WITH SPANS UNDER 180". INTERPRETATION OF PRESSURE VALUES BETWEEN THOSE SHOWN MAY APPLY.

NOTES APPLICABLE TO SINGLE-SPAN REINFORCED CURTAIN WALLS

1. REINFORCEMENT SHALL RUN CONTINUOUS IN INTERMEDIATE VERTICAL MEMBERS & EXTEND TO WITHIN 17 1/2" OF THE ENDS.
2. THERE IS NO LIMIT TO THE NUMBER OF SECTIONS HORIZONTALLY PROVIDING THE OPENING IS DESIGNED TO SUPPORT THE LOADS TRANSFERED FROM THE WALL SYSTEM.
3. THE SINGLE-SPAN ELEVATION SHOWN SHOWS ONE DOOR SECTION. MULTIPLE DOOR SECTIONS MAY OCCUR SIDE-BY SIDE IN ONE WALL SYSTEM PROVIDING ALL REQUIREMENTS WITHIN THIS DRAWING ARE MET & PROPER LOAD WIDTH (DISTANCE BETWEEN DOOR CENTERS) IS CONSIDERED WHEN DETERMINING ALLOWABLE DESIGN PRESSURE.
4. ALTHOUGH A DOOR SECTION IS SHOWN AT A SIDE JAMB, THAT SECTION MAY EXIST WITH OR WITHOUT A DOOR & THE DOOR MAY EXIST IN ANY BAY.
5. THE ELEVATION HERE-IN SHOWS T-ANCHORS AT THE BASE OF THE WALL ONLY. THESE ANCHORS MAY ALSO BE USED AT THE TOP OF A WALL IN LIEU OF THE WIND LOAD ANCHORS SHOWN PROVIDING THEY ARE INSTALLED THE SAME AS SHOWN AT THE BASE.
6. DOOR OPENINGS WIDER THAN THAT SHOWN ARE NOT PART OF THE SCOPE OF THIS APPROVAL. IF WIDER DOOR OPENINGS ARE REQUIRED, THEY SHALL BE EVALUATED & CERTIFIED UNDER SEPERATE JOB APPROVAL.

DRAWN BY: W.W.S.	CHECKED BY: W.W.S.
PLOT: 1=48	DATE: 03/16/13

NO.	REVISION DESCRIPTION	BY	DATE

DRAWING TITLE
10 13/16" DEEP 1600 SYSTEM 1 CURTAIN WALL (L.M.I.)

JOB INFORMATION:
KAWNEER COMPANY, INC.
555 GUTHRIDGE COURT
NORCROSS, GA 30092
770-449-5555

CONSULTANTS
W. W. SCHAEFER ENGINEERING & CONSULTING, P.A. (REG. NO. F-14980)
7480 150TH COURT NORTH
PALM BEACH GARDENS, FL 33418
PHONE: 561-744-3424

CERTIFICATION
SEP 07 2016
WARREN W. SCHAEFER, P.E.
P.E. NO. 113497

DRAWING NO. 1794T
REV. A
SHEET NO. 2 OF 12

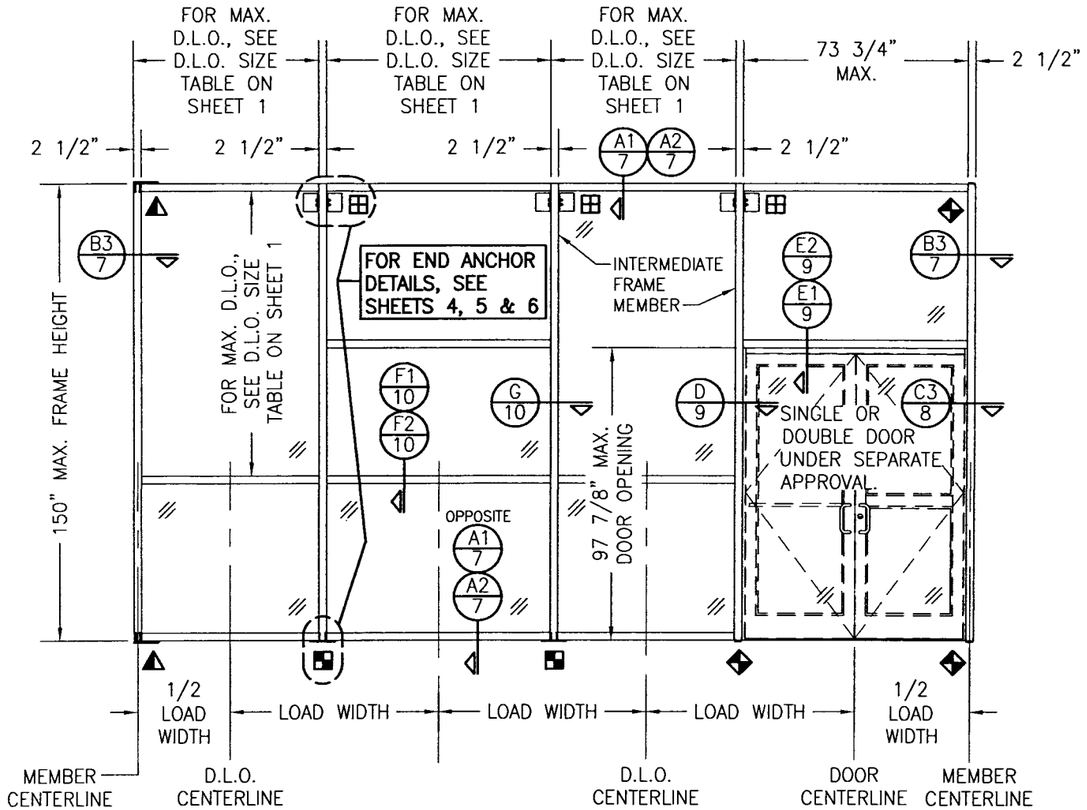

EXTERIOR ELEVATION: SINGLE-SPAN NON-REINFORCED CURTAIN WALL

SCALE: 1/4" = 1'-0"

NOTES APPLICABLE TO SINGLE-SPAN NON-REINFORCED CURTAIN WALLS

1. THE ELEVATION SHOWN ILLUSTRATES SIDE JAMB FRAME MEMBERS WITH FULL SPANS END SUPPORTED BY "F" OR "U" ANCHORS. IT IS OPTIONAL TO OMIT THE "F" & "U" ANCHORS AND INSTALL THE SIDE JAMB F-PERIMITER ANCHOR SCREWS AS SHOWN IN THE REINFORCED WALL ELEVATION ON SHEET 2.
2. THERE IS NO LIMIT TO THE NUMBER OF SECTIONS HORIZONTALLY PROVIDING THE OPENING IS DESIGNED TO SUPPORT THE LOADS TRANSFERED FROM THE WALL SYSTEM.
3. THE SINGLE-SPAN ELEVATION SHOWN SHOWS ONE DOOR SECTION. MULTIPLE DOOR SECTIONS MAY OCCUR SIDE-BY SIDE IN ONE WALL SYSTEM PROVIDING ALL REQUIREMENTS WITHIN THIS DRAWING ARE MET & PROPER LOAD WIDTH (DISTANCE BETWEEN DOOR CENTERS) IS CONSIDERED WHEN DETERMINING ALLOWABLE DESIGN PRESSURE.
4. ALTHOUGH A DOOR SECTION IS SHOWN AT A SIDE JAMB, THAT SECTION MAY EXIST WITH OR WITHOUT A DOOR & THE DOOR MAY EXIST IN ANY BAY.
5. THE ELEVATION HERE-IN SHOWS T-ANCHORS AT THE BASE OF THE WALL ONLY. THESE ANCHORS MAY ALSO BE USED AT THE TOP OF A WALL IN LIEU OF THE WIND LOAD ANCHORS SHOWN PROVIDING THEY ARE INSTALLED THE SAME AS SHOWN AT THE BASE.
6. DOOR OPENINGS WIDER THAN THAT SHOWN ARE NOT PART OF THE SCOPE OF THIS APPROVAL. IF WIDER DOOR OPENINGS ARE REQUIRED, THEY SHALL BE EVALUATED & CERTIFIED UNDER SEPERATE JOB APPROVAL.
7. WHEN THERE IS NO CONTINUOUS JAMB SUPPORT, THE MINIMUM & MAXIMUM ALLOWABLE SPACE BETWEEN JAMB FRAME MEMBERS & THE OPENING SUBSTRATE OR FINISHES SHALL BE SPECIFIED BY THE ENGINEER OR ARCHITECT OF RECORD FOR EACH JOB BUT SHALL NOT BE LESS THAN 1/2" NOR GREATER THAN 1 3/8". WHEN CONSIDERING TYPE, DEPTH & JOINT SPAN OF SEALANT, THE ENGINEER/ARCHITECT SHALL TAKE INTO CONSIDERATION THE DEFLECTION OF THE JAMB MEMBER THAT WOULD OCCUR WHILE SUPPORTING THE JOB REQUIRED DESIGN WIND PRESSURE. ALSO TO BE CONSIDERED SHALL BE THE MATERIALS & SURFACES TO WHICH THE SEALANT WILL BE APPLIED.

ALLOWABLE DESIGN PRESSURE (SINGLE SPAN REINFORCED CURTAIN WALL)

MAXIMUM MULLION SPAN (IN.)	MAXIMUM LOAD WIDTH (IN.)	ALLOWABLE PRESSURE (POS & NEG PSF)
150	76 1/4	81.0
	72	85.8
	68 5/8	90.0
	62	99.6
	56	110.0
144	76 1/4	84.4
	72	89.4
	68 5/8	93.8
	62	103.8
	58	110.0
132 & LESS	76 1/4	90.0
	72	95.3
	68 5/8	100.0
	62	110.0

NOTES:
1. SEE ELEVATION FOR DIMENSIONING OF LOAD WIDTH.
2. PRESSURES SHOWN ARE SPECIFIC TO EACH INDIVIDUAL MULLION SUPPORT AREA. ALLOWABLE PRESSURE MAY VARY FROM BAY TO BAY AS DICTATED BY EACH INDIVIDUAL MULLION CONDITION.
3. LESSER OF PRESSURES STATED IN THIS TABLE & THE ALLOWABLE GLASS PRESSURE, AS SHOWN ON SHEET 1, SHALL CONTROL AS ALLOWABLE FOR THE WALL ASSEMBLY.
4. AT SPAN OF 132" & LESS, LOAD WIDTH CONTROLS THE ALLOWABLE PRESSURE. THEREFORE, IT SHALL NOT BE ASSUMED THAT INTERPRETATION OF PRESSURE VALUES CAN BE DONE WITH SPANS UNDER 132". INTERPRETATION OF PRESSURE VALUES BETWEEN THOSE SHOWN MAY APPLY.

DRAWN BY: W.W.S.	CHECKED BY: W.W.S.
PLOT: 1=48	DATE: 03/16/13

NO.	REVISION DESCRIPTION	BY	DATE

DRAWING TITLE
10 13/16" DEEP 1600 SYSTEM 1 CURTAIN WALL (L.M.I.)

JOB INFORMATION:
KAWNEER COMPANY, INC.
555 GUTHRIDGE COURT
NORCROSS, GA 30092
770-449-5555

CONSULTANTS
W. W. SCHAEFER ENGINEERING & CONSULTING, P.A. (REG. NO. F-14980)
7480 150TH COURT NORTH
PALM BEACH GARDENS, FL 33418
PHONE: 561-744-3424

CERTIFICATION
SEP 07 2016
WARREN W. SCHAEFER, P.E.
P.E. NO. 113497

DRAWING NO. 1794T
REV. A
SHEET NO. 3 OF 12

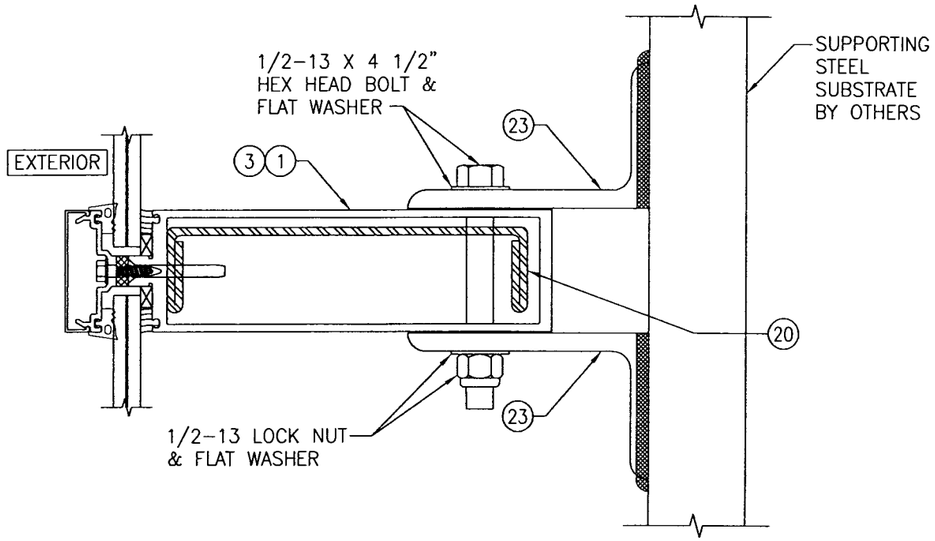

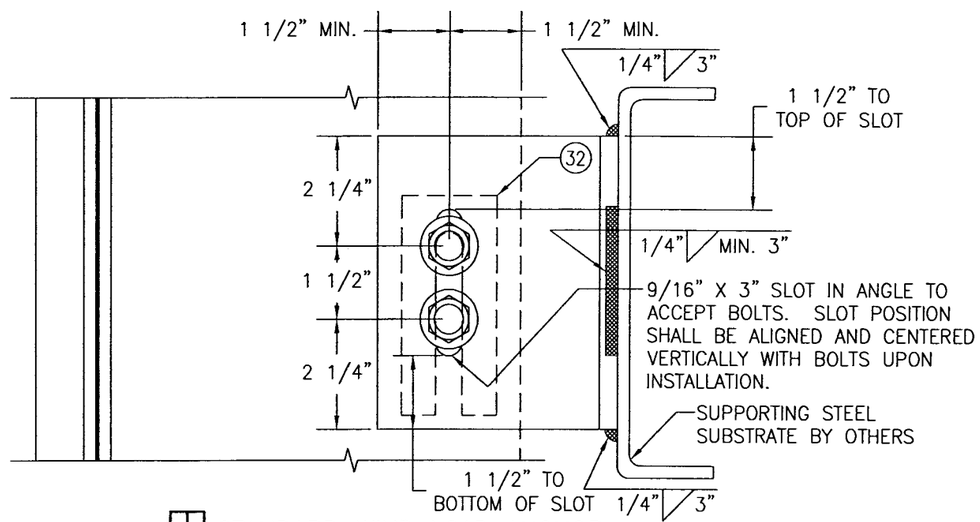

STANDARD WIND LOAD ANCHOR

SCALE: 1/3 FULL

NOTE: ALL 1/2" BOLTS CONNECTING ANGLES TO MULLIONS SHALL BE GRADE 5 STEEL OR 300 SERIES STAINLESS STEEL.

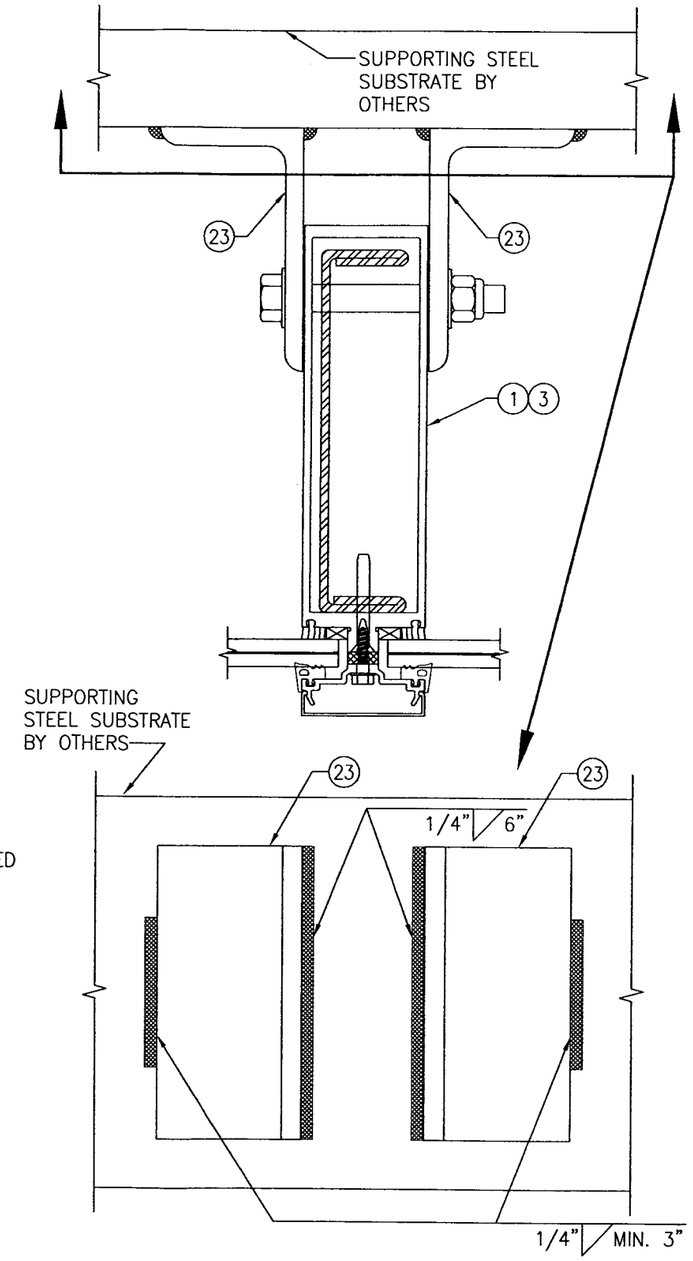

ALTERNATE WELD DETAIL FOR WIND LOAD ANCHORS

SCALE: 1/3 FULL

DRAWN BY: W.W.S.	CHECKED BY: W.W.S.
PLOT: 1=3	DATE: 03/19/13

NO.	REVISION DESCRIPTION	BY	DATE

DRAWING TITLE
10 13/16" DEEP 1600 SYSTEM 1 CURTAIN WALL (L.M.I.)

JOB INFORMATION:
KAWNEER COMPANY, INC.
555 GUTHRIDGE COURT
NORCROSS, GA 30092
770-449-5555

CONSULTANTS
W. W. SCHAEFER ENGINEERING & CONSULTING, P.A. (REG. NO. F-14980)
7480 150TH COURT NORTH
PALM BEACH GARDENS, FL 33418
PHONE: 561-744-3424

CERTIFICATION
SEP 07 2016
WARREN W. SCHAEFER, P.E.
P.E. NO. 113497

STATE OF FLORIDA
WARREN W. SCHAEFER
113497
LICENSED PROFESSIONAL ENGINEER

DRAWING NO. 1794T
REV. A
SHEET NO. 4 OF 12

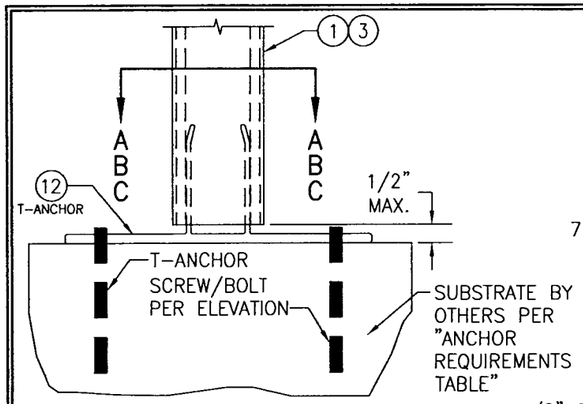

STANDARD T-ANCHOR
SCALE: 1/4 FULL

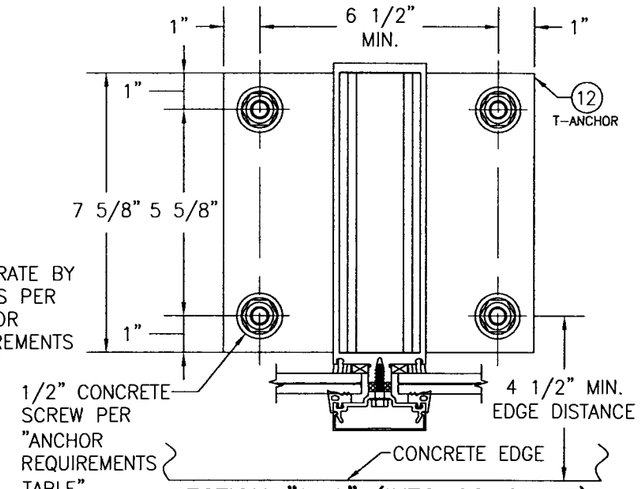

SECTION "A-A" (INTO CONCRETE)
SCALE: 1/4 FULL

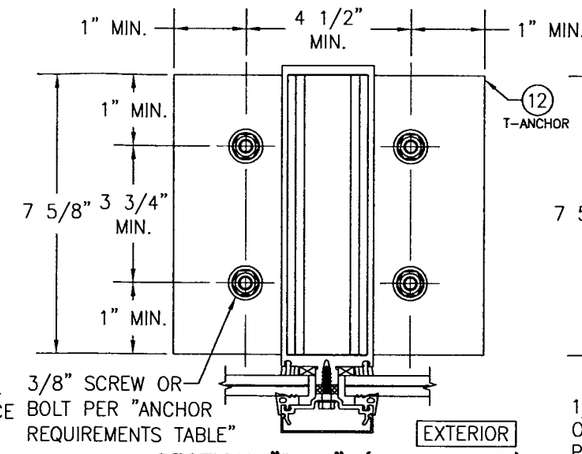

SECTION "B-B" (INTO STEEL)
SCALE: 1/4 FULL

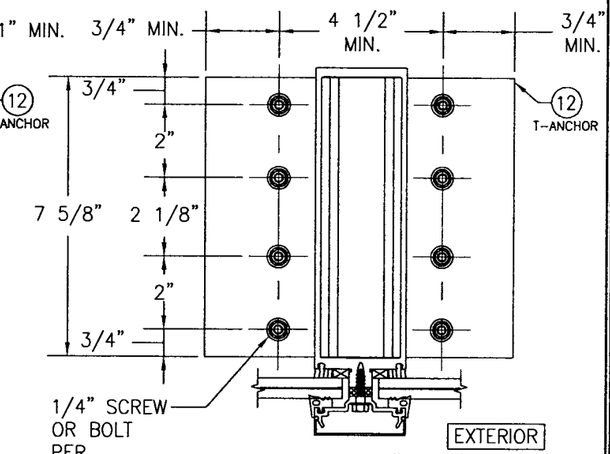

SECTION "C-C"
(ALTERNATE INTO STEEL)
SCALE: 1/4 FULL

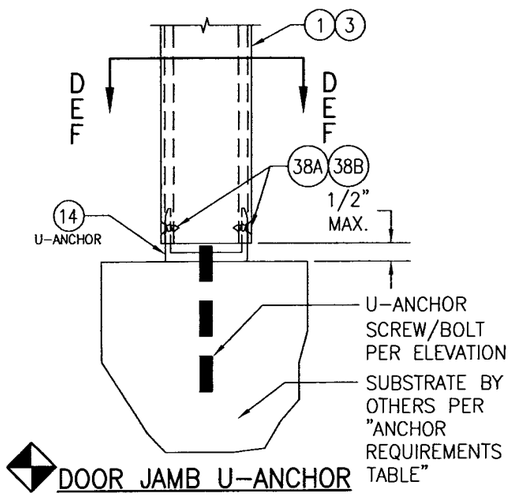

DOOR JAMB U-ANCHOR
SCALE: 1/4 FULL

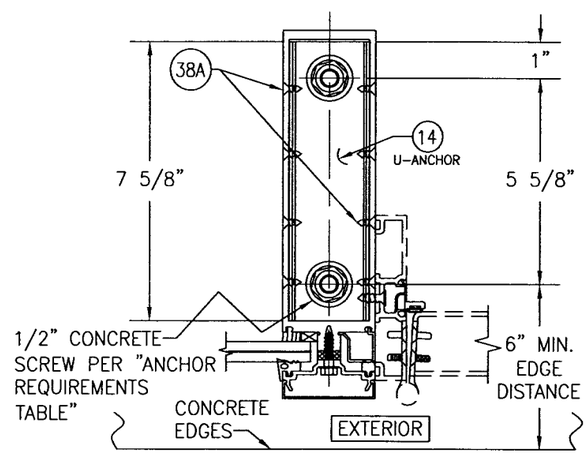

SECTION "D-D"
(INTO CONCRETE AT
INTERMEDIATE MEMBER)
SCALE: 1/4 FULL

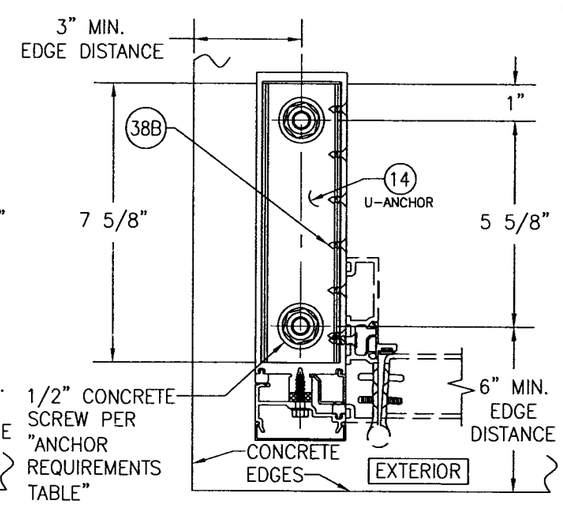

SECTION "E-E"
(INTO CONCRETE AT
PERIMETER SIDE JAMB MEMBER)
SCALE: 1/4 FULL

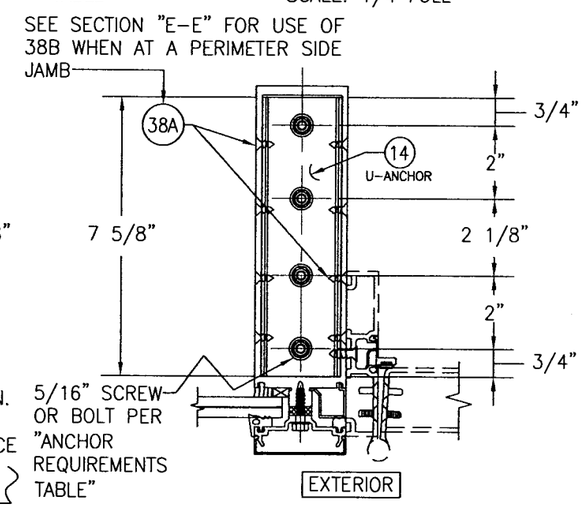

SECTION "F-F"
(INTO STEEL)
SCALE: 1/4 FULL

DRAWN BY: W.W.S.	CHECKED BY: W.W.S.
PLOT: 1=4	DATE: 03/19/13

NO.	REVISION DESCRIPTION	BY	DATE

DRAWING TITLE
10 13/16" DEEP 1600 SYSTEM 1 CURTAIN WALL (L.M.I.)

JOB INFORMATION:
KAWNEER COMPANY, INC.
555 GUTHRIDGE COURT
NORCROSS, GA 30092
770-449-5555

CONSULTANTS
W. W. SCHAEFER ENGINEERING & CONSULTING, P.A. (REG. NO. F-14980)
7480 150TH COURT NORTH
PALM BEACH GARDENS, FL 33418
PHONE: 561-744-3424

CERTIFICATION
SEP 07 2016
WARREN W. SCHAEFER, P.E.
P.E. NO. 113497

DRAWING NO. 1794T
REV. A
SHEET NO. 5 OF 12

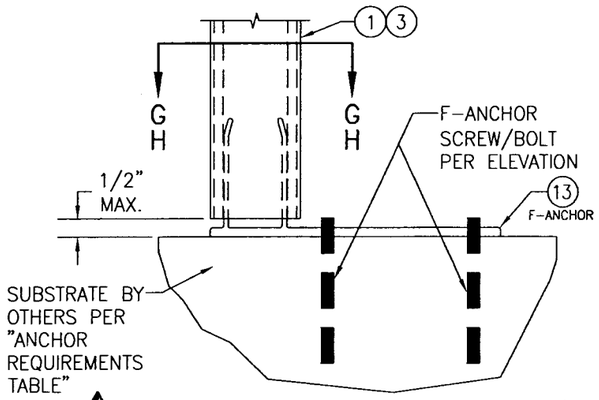

F-ANCHOR (FRAME MEMBER ENDS)

SCALE: 1/4 FULL

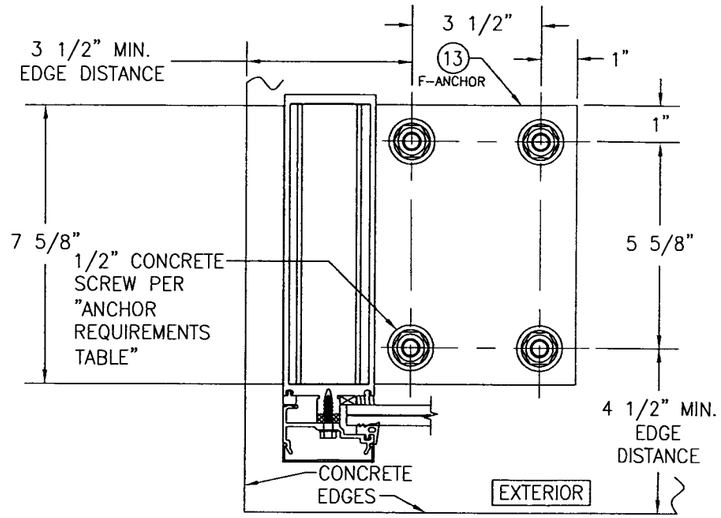

SECTION "G-G" (INTO CONCRETE)

SCALE: 1/4 FULL

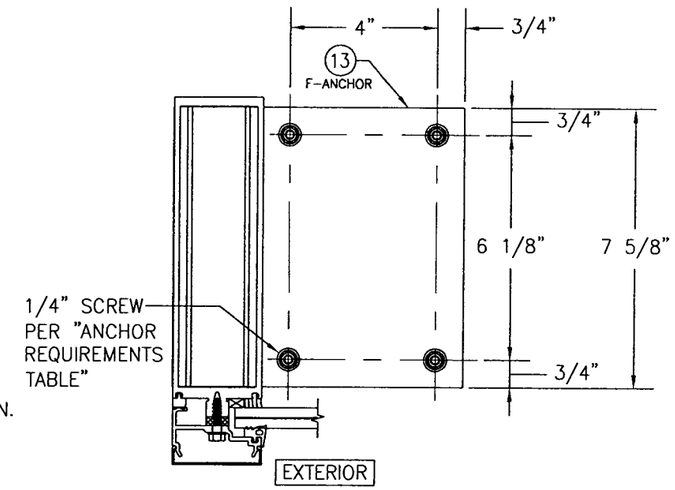

SECTION "H-H" (INTO STEEL)

SCALE: 1/4 FULL

DRAWN BY: W.W.S.	CHECKED BY: W.W.S.
PLOT: 1=4	DATE: 03/19/13

NO.	REVISION DESCRIPTION	BY	DATE

DRAWING TITLE
10 13/16" DEEP 1600 SYSTEM 1 CURTAIN WALL (L.M.I.)

JOB INFORMATION:
KAWNEER COMPANY, INC.
555 GUTHRIDGE COURT
NORCROSS, GA 30092
770-449-5555

CONSULTANTS
W. W. SCHAEFER ENGINEERING & CONSULTING, P.A. (REG. NO. F-14980)
7480 150TH COURT NORTH
PALM BEACH GARDENS, FL 33418
PHONE: 561-744-3424

CERTIFICATION
SEP 07 2016
WARREN W. SCHAEFER, P.E.
P.E. NO. 113497

STATE OF TEXAS
WARREN W. SCHAEFER
113497
LICENSED
PROFESSIONAL ENGINEER

DRAWING NO. 1794T
REV. A
SHEET NO. 6 OF 12

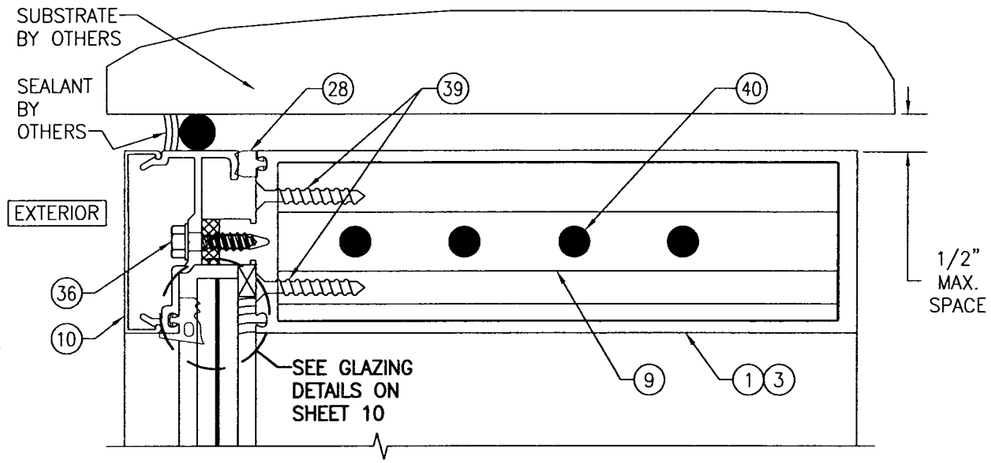

SECTION A1/7
SCALE: 1/2 FULL

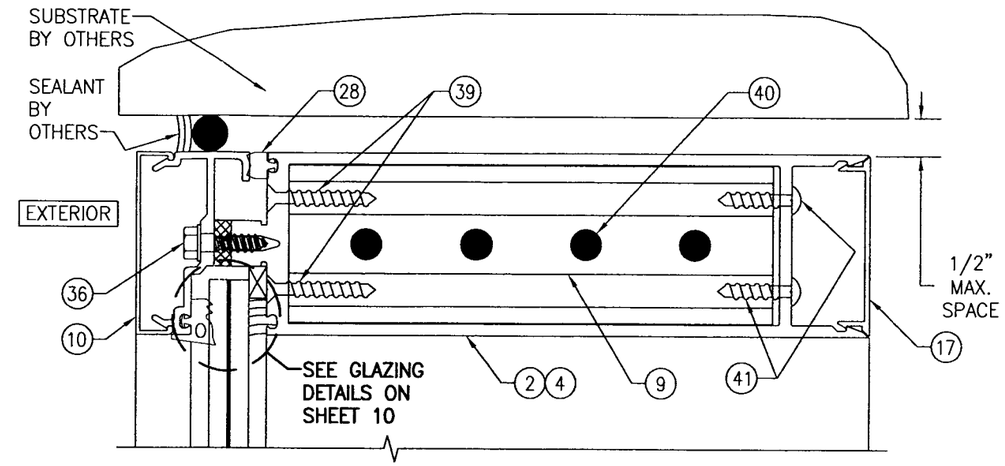

SECTION A2/7
SCALE: 1/2 FULL

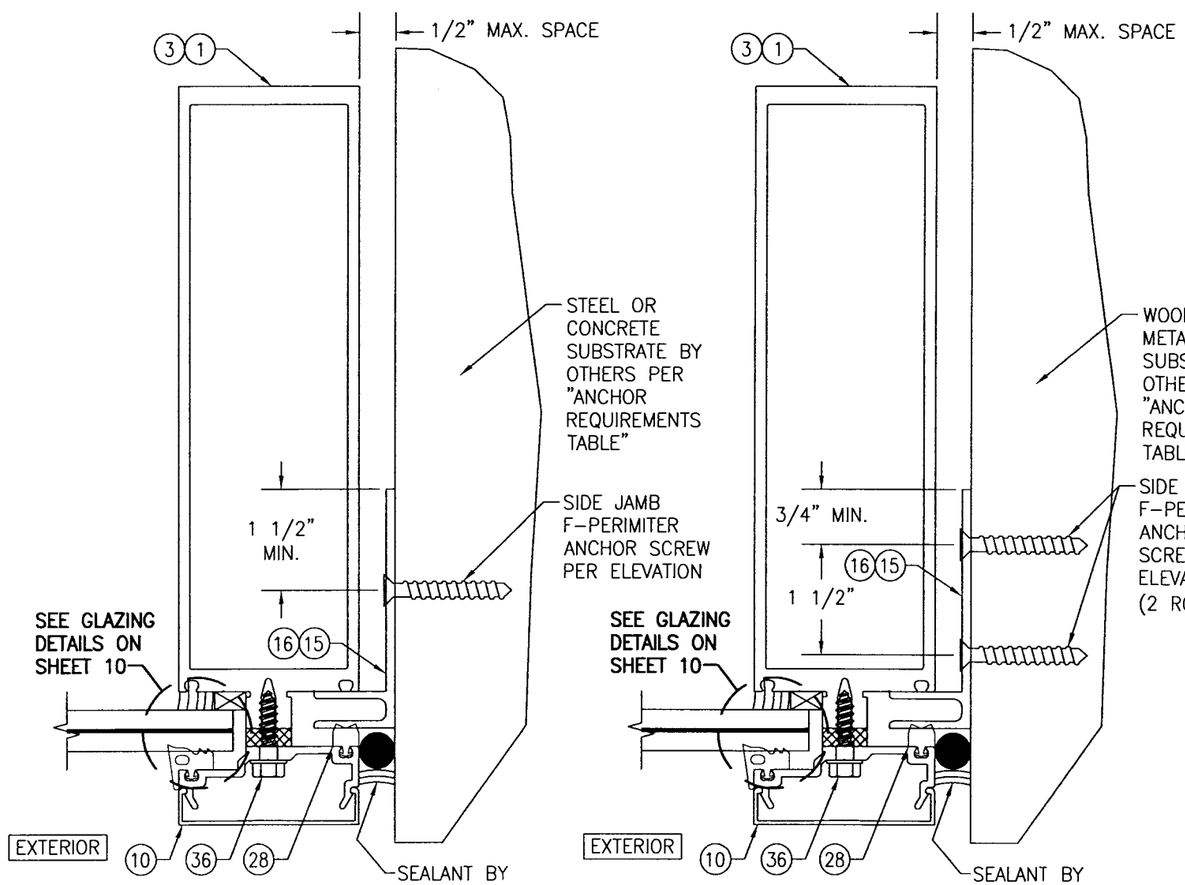

SECTION B1/7
SCALE: 1/2 FULL
(SIDE JAMB F-ANCHOR TO STEEL AND CONCRETE)

SECTION B2/7
SCALE: 1/2 FULL
(SIDE JAMB F-ANCHOR TO WOOD OR METAL STUD)

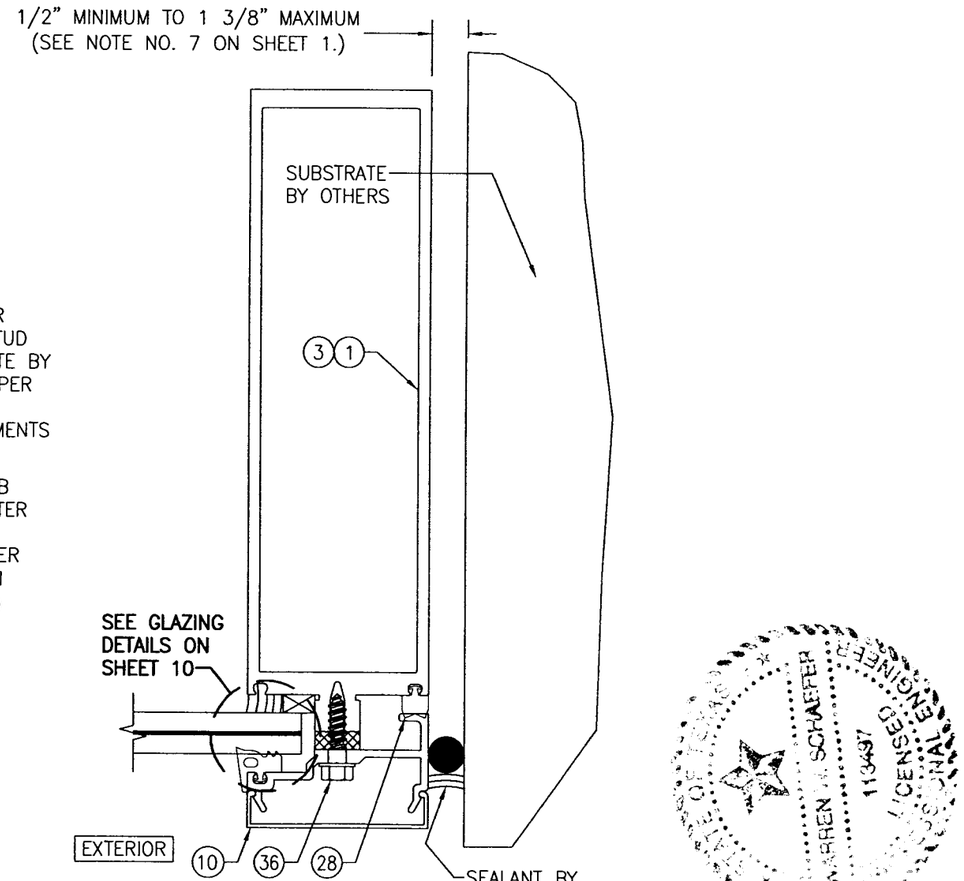

SECTION B3/7
SCALE: 1/2 FULL
(NO SIDE JAMB F-ANCHOR)

DRAWN BY: W.W.S.	CHECKED BY: W.W.S.
PLOT: 1=2	DATE: 03/19/13

NO.	REVISION DESCRIPTION	BY	DATE

DRAWING TITLE
10 13/16" DEEP 1600 SYSTEM 1 CURTAIN WALL (L.M.I.)

JOB INFORMATION:
KAWNEER COMPANY, INC.
555 GUTHRIDGE COURT
NORCROSS, GA 30092
770-449-5555

CONSULTANTS
W. W. SCHAEFER ENGINEERING & CONSULTING, P.A. (REG. NO. F-14980)
7480 150TH COURT NORTH
PALM BEACH GARDENS, FL 33418
PHONE: 561-744-3424

CERTIFICATION
SEP 07 2016
WARREN W. SCHAEFER, P.E.
P.E. NO. 113497

DRAWING NO. 1794T
REV. A
SHEET NO. 7 OF 12

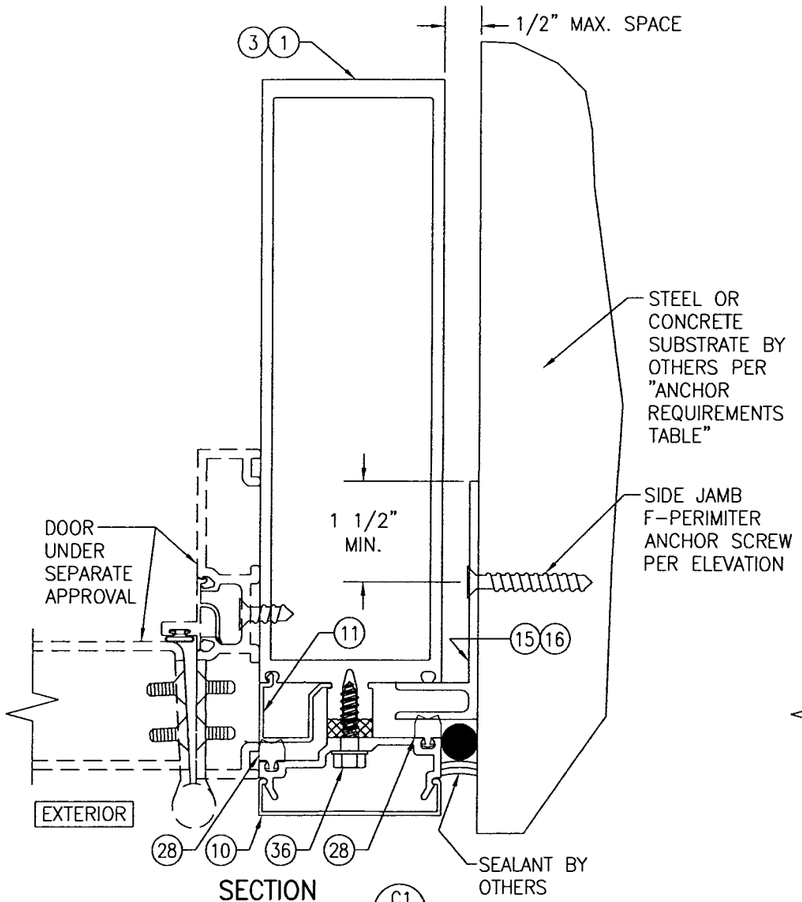

SECTION C1/8
SCALE: 1/2 FULL
(SIDE JAMB F-ANCHOR TO STEEL AND CONCRETE)

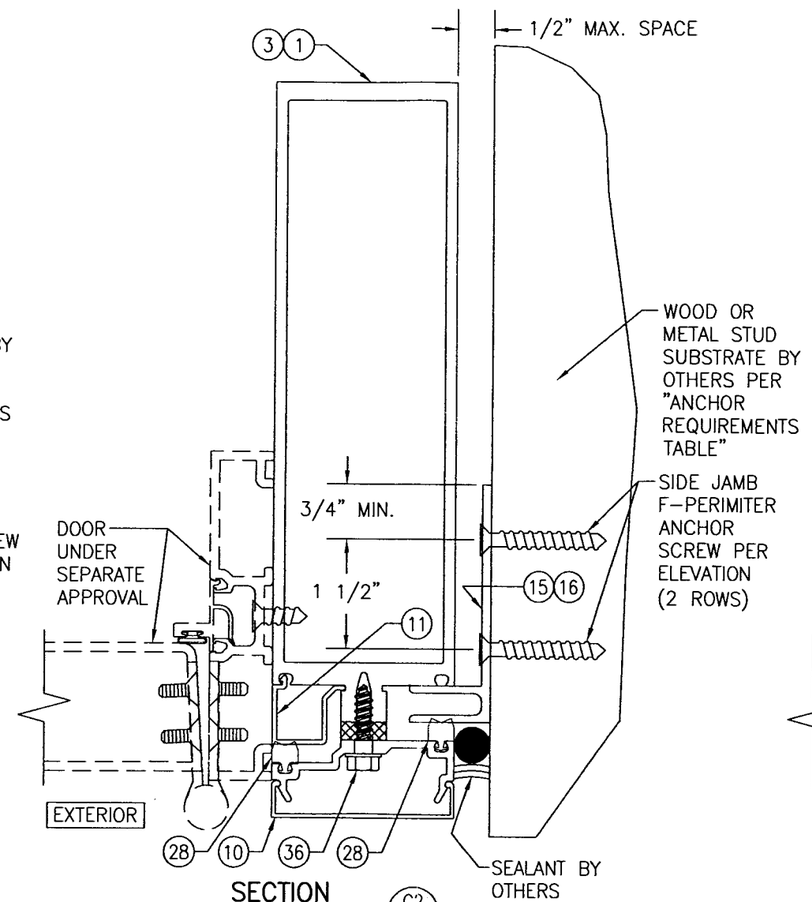

SECTION C2/8
SCALE: 1/2 FULL
(SIDE JAMB F-ANCHOR TO WOOD OR METAL STUD)

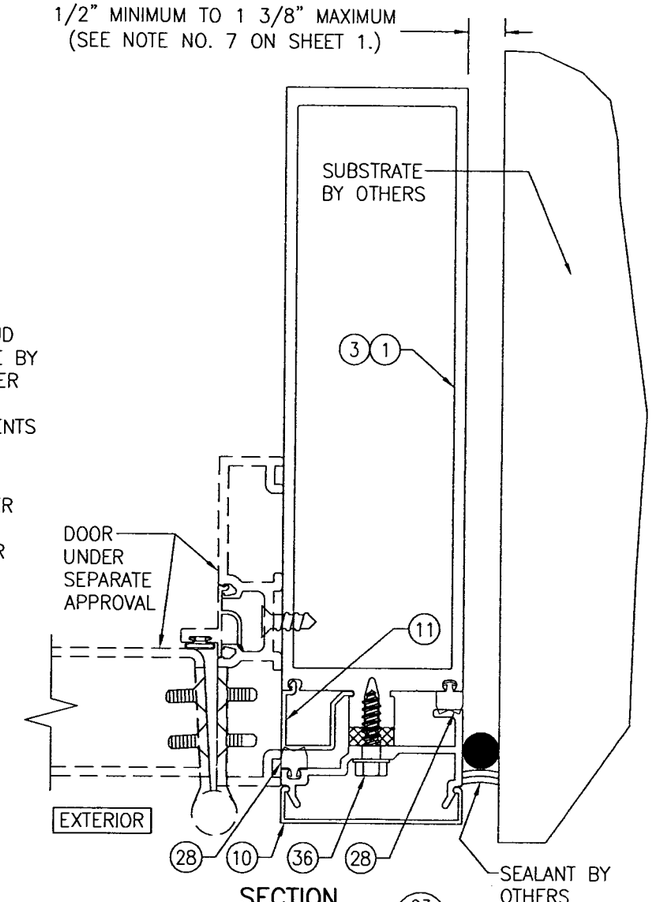

SECTION C3/8
SCALE: 1/2 FULL
(NO SIDE JAMB F-ANCHOR)

DRAWN BY: W.W.S.	CHECKED BY: W.W.S.
PLOT: 1=2	DATE: 03/19/13

NO.	REVISION DESCRIPTION	BY	DATE

DRAWING TITLE
10 13/16" DEEP 1600 SYSTEM 1 CURTAIN WALL (L.M.I.)

JOB INFORMATION:
KAWNEER COMPANY, INC.
555 GUTHRIDGE COURT
NORCROSS, GA 30092
770-449-5555

CONSULTANTS
W. W. SCHAEFER ENGINEERING & CONSULTING, P.A. (REG. NO. F-14980)
7480 150TH COURT NORTH
PALM BEACH GARDENS, FL 33418
PHONE: 561-744-3424

CERTIFICATION
SEP 07 2016
WARREN W. SCHAEFER, P.E.
P.E. NO. 113497

DRAWING NO. 1794T
REV. A
SHEET NO. 8 OF 12

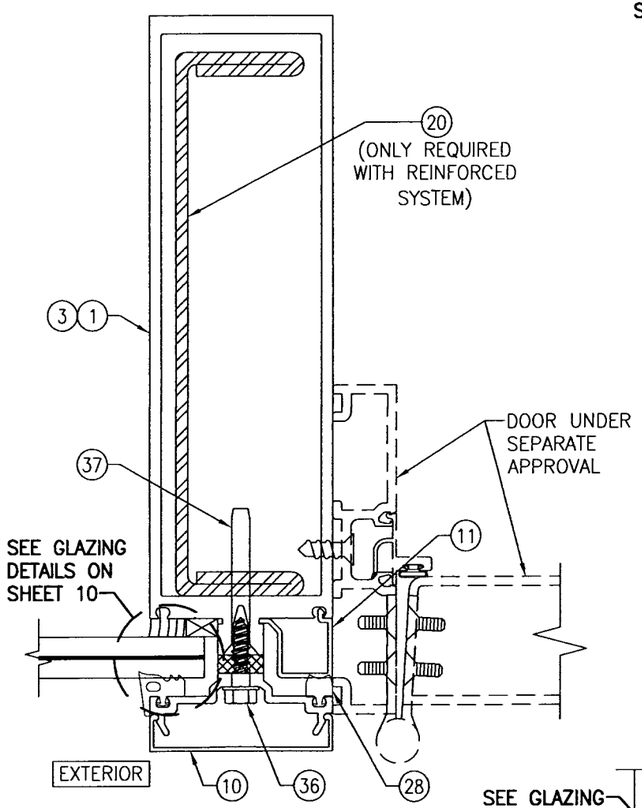

SECTION D/9
SCALE: 1/2 FULL

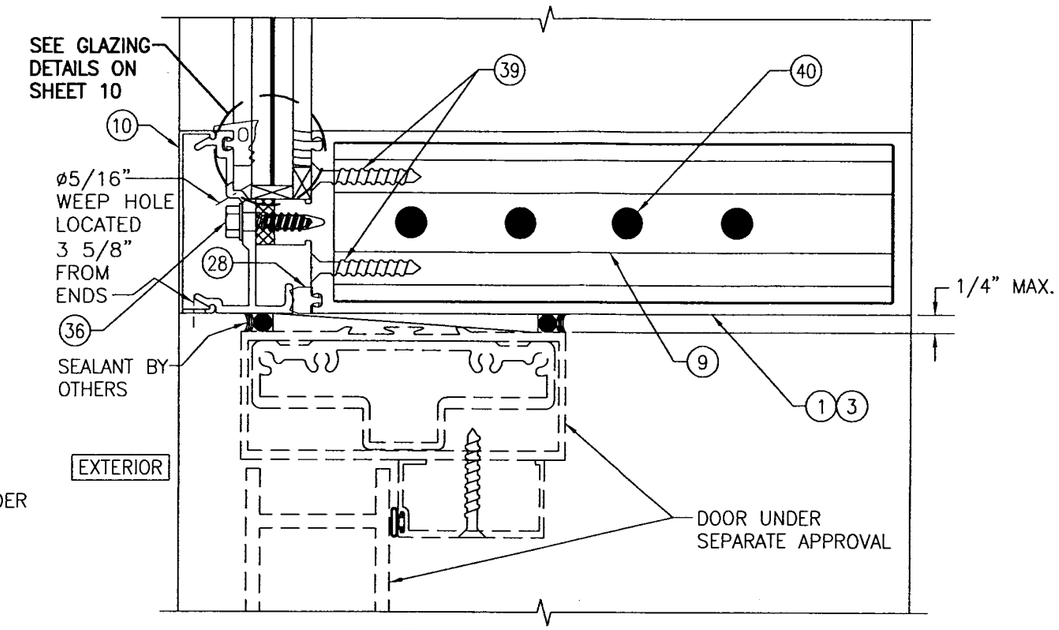

SECTION E1/9
SCALE: 1/2 FULL

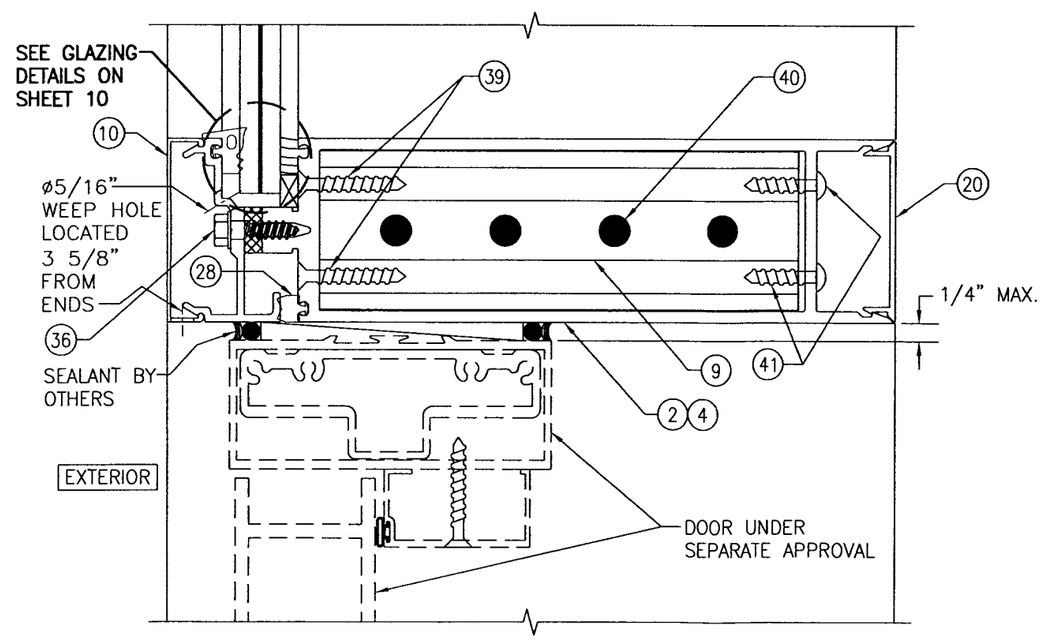

SECTION E2/9
SCALE: 1/2 FULL

DRAWN BY: W.W.S.	CHECKED BY: W.W.S.
PLOT: 1=2	DATE: 03/19/13

NO.	REVISION DESCRIPTION	BY	DATE

DRAWING TITLE
10 13/16" DEEP 1600 SYSTEM 1 CURTAIN WALL (L.M.I.)

JOB INFORMATION:
KAWNEER COMPANY, INC.
555 GUTHRIDGE COURT
NORCROSS, GA 30092
770-449-5555

CONSULTANTS
W. W. SCHAEFER ENGINEERING & CONSULTING, P.A. (REG. NO. F-14980)
748D 150TH COURT NORTH
PALM BEACH GARDENS, FL 33418
PHONE: 561-744-3424

CERTIFICATION
SEP 07 2016
WARREN W. SCHAEFER, P.E.
P.E. NO. 113497

DRAWING NO. 1794T
REV. A
SHEET NO. 9 OF 12

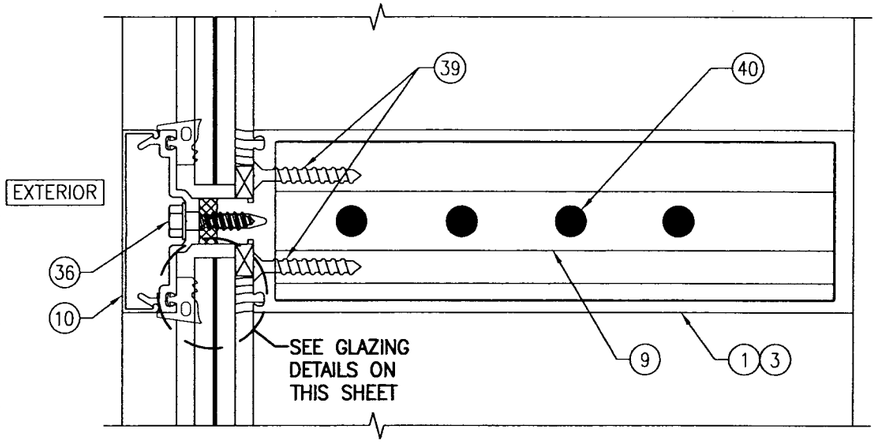

SECTION F1/10
SCALE: 1/2 FULL

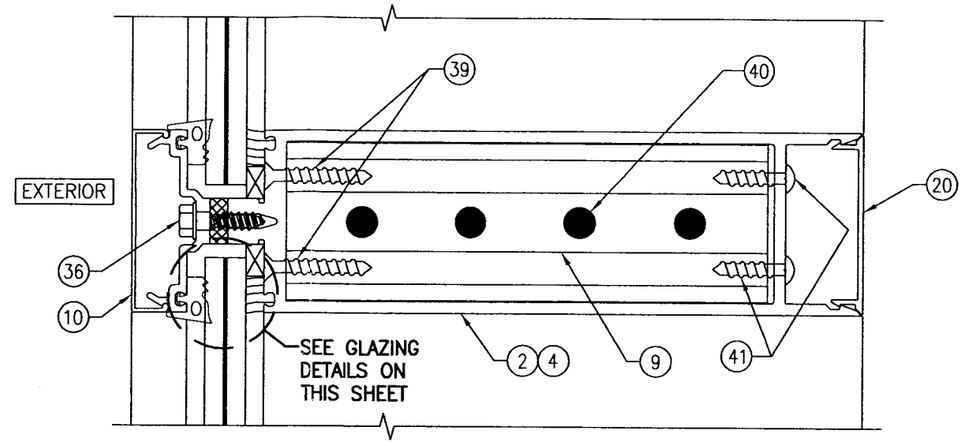

SECTION F2/10
SCALE: 1/2 FULL

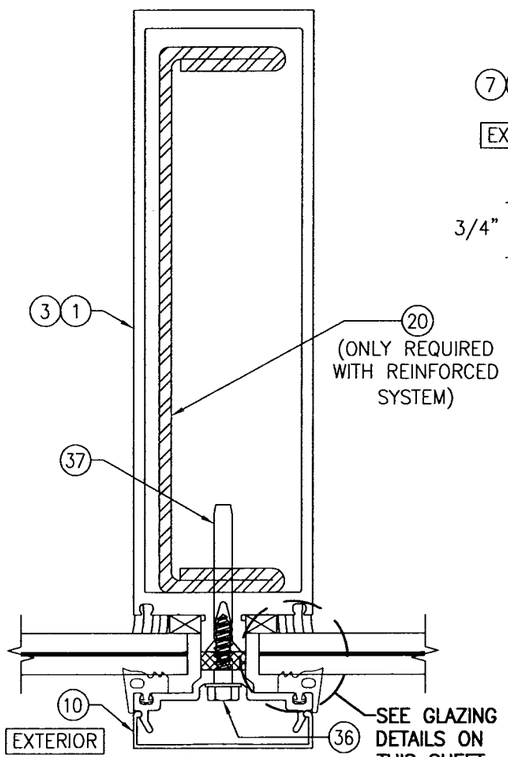

SECTION G/10
SCALE: 1/2 FULL

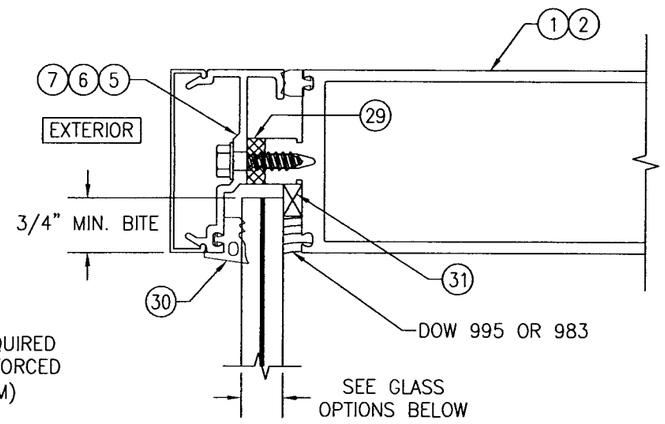

TYPICAL MONOLITHIC GLAZING DETAIL

GLASS OPTIONS:

OPTION 1: 5/8" THICK LAMINATED VIRACON HRG-2 GLASS (1/4" HT. ST./0.050" URETHANE/0.080" POLYCARBONATE/0.050" URETHANE/1/4" HT. ST.)
OPTION 2 9/16" THICK LAMINATED GLASS (1/4" HT. ST./0.100" EASTMAN CHEMICAL CO. SAFLEX HP/1/4" HT. ST.)
OPTION 3: 9/16" THICK LAMINATED GLASS (1/4" HT. ST./0.090" KURARAY (PREVIOUSLY DUPONT) SG/1/4" HT. ST.)
OPTION 4: 9/16" THICK LAMINATED GLASS (1/4" HT. ST./0.090" EASTMAN CHEMICAL CO. SAFLEX/1/4" HT. ST.)
OPTION 5: 9/16" THICK LAMINATED GLASS (1/4" HT. ST./0.090" KURARAY (PREVIOUSLY DUPONT) BUTACITE PVB/1/4" HT. ST.)

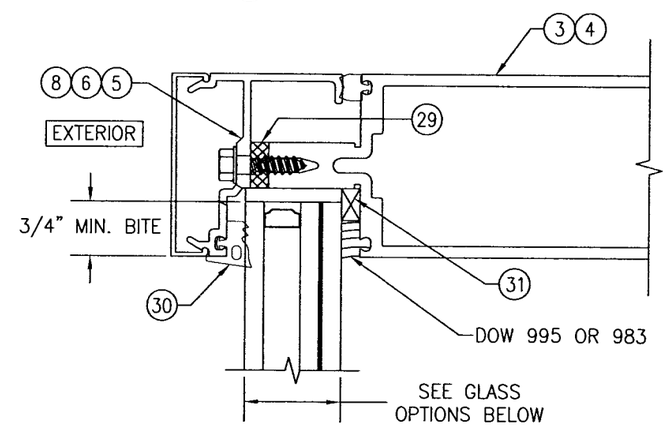

TYPICAL I.G. GLAZING DETAIL

GLASS OPTIONS:

OPTION 6: 1 5/16" THICK I.G LAMINATED GLASS (1/4" HT. ST. OR TEMPERED EXTERIOR; 1/2" AIR SPACE; 1/4" HT. ST./0.090" EASTMAN CHEMICAL CO. SAFLEX/1/4" HT. ST. INTERIOR)
OPTION 7: 1 5/16" THICK I.G LAMINATED GLASS (1/4" HT. ST. OR TEMPERED EXTERIOR; 1/2" AIR SPACE; 1/4" HT. ST./0.090" KURARAY (PREVIOUSLY DUPONT) BUTACITE PVB/1/4" HT. ST. INTERIOR)
OPTION 8: 1 5/16" THICK I.G LAMINATED GLASS (1/4" HT. ST. OR TEMPERED EXTERIOR; 1/2" AIR SPACE; 1/4" HT. ST./0.090" KURARAY (PREVIOUSLY DUPONT) SG/1/4" HT. ST. INTERIOR)

NOTE: EXTERIOR GLASS PANE OF I.G. GLAZING SHALL BE TEMPERED WHEN CURTAIN WALL GLASS IS INSTALLED IN A SMALL MISSILE IMPACT LOCATION OF A BUILDING OR WHEN GLASS IS REQUIRED TO BE SAFETY GLAZED.

DRAWN BY: W.W.S.	CHECKED BY: W.W.S.
PLOT: 1=2	DATE: 03/19/13

NO.	REVISION DESCRIPTION	BY	DATE

JOB INFORMATION:
CURTAIN WALL (L.M.I.)

KAWNEER COMPANY, INC.
555 GUTHRIDGE COURT
NORCROSS, GA 30092
770-449-5555

DRAWING TITLE
10 13/16" DEEP 1600 SYSTEM 1 CURTAIN WALL

CONSULTANTS
W. W. SCHAEFER ENGINEERING & CONSULTING, P.A. (REG. NO. F-14980)
7480 150TH COURT NORTH
PALM BEACH GARDENS, FL 33418
PHONE: 561-744-3424

CERTIFICATION
SEP 07 2016
WARREN W. SCHAEFER, P.E.
P.E. NO. 113497

DRAWING NO. 1794T
REV. A
SHEET NO. 10 OF 12

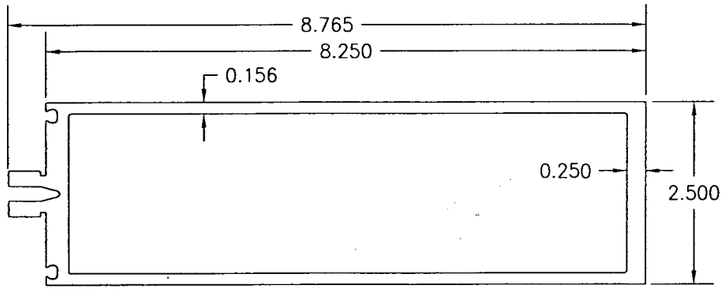

1 VERTICAL AND HORIZONTAL FRAMING USED WITH MONOLITHIC GLASS

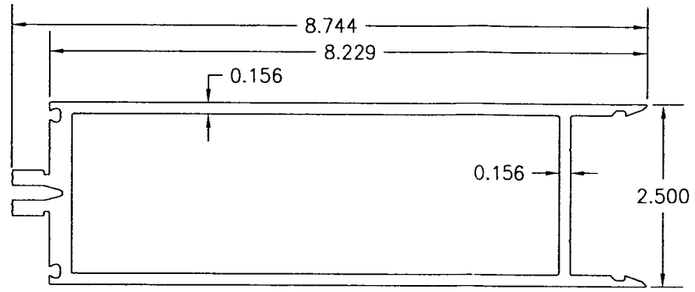

2 ALTERNATE HORIZONTAL FRAMING USED WITH MONOLITHIC GLASS

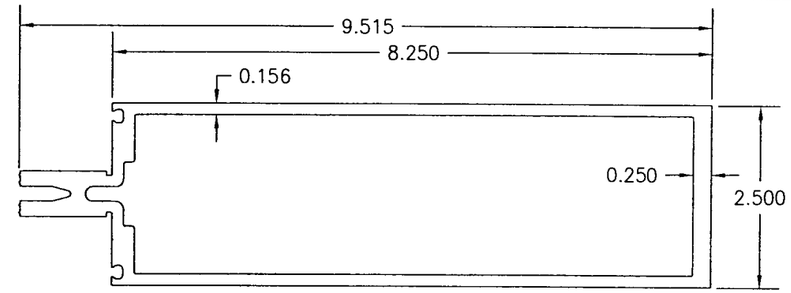

3 VERTICAL AND HORIZONTAL FRAMING USED WITH I.G. GLASS

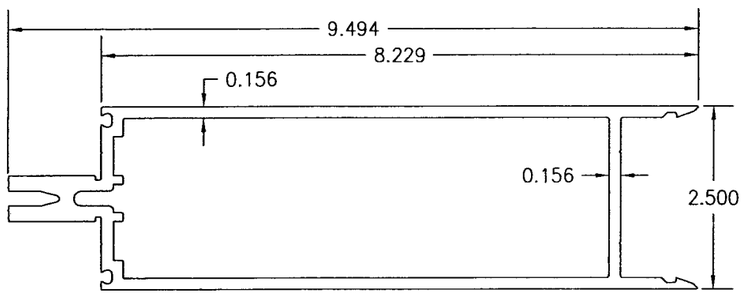

4 ALTERNATE HORIZONTAL FRAMING USED WITH I.G. GLASS

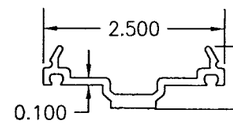

5 PRESSURE PLATE

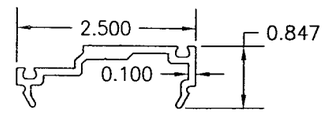

6 PRESSURE PLATE

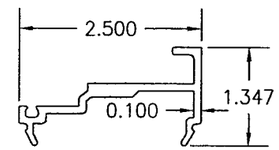

7 PRESSURE PLATE

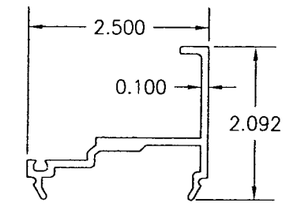

8 PRESSURE PLATE

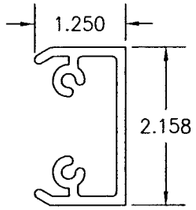

LENGTH = 6.625" WITH PARTS 2 & 4
LENGTH = 7.625" WITH PARTS 1 & 3

9 SHEAR BLOCK

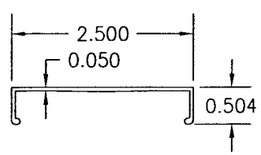

10 PRESSURE PLATE COVER

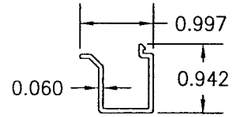

11 DOOR POCKET FILLER

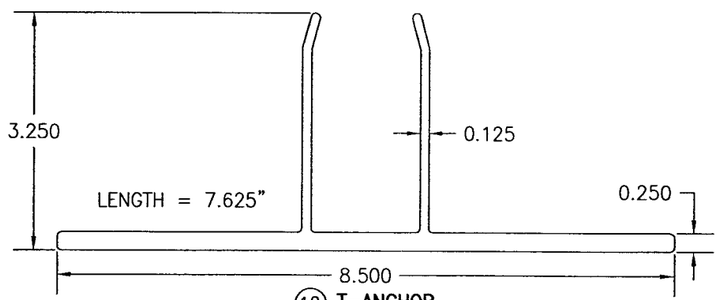

12 T-ANCHOR

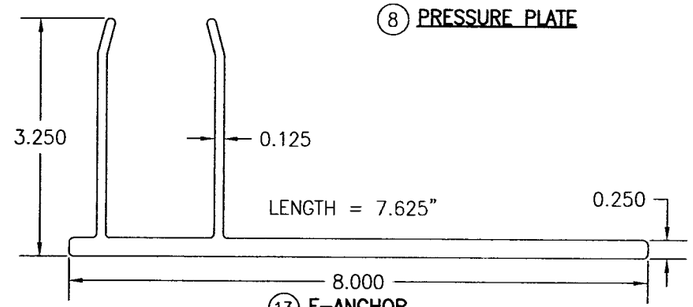

13 F-ANCHOR

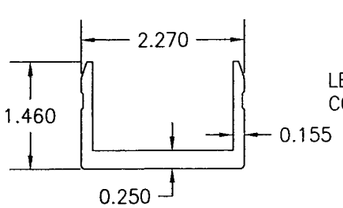

LENGTH = 7.750"

14 U-ANCHOR

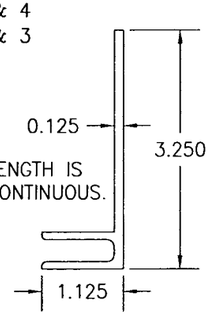

15 F-PERIMITER ANCHOR USED WITH MONOLITHIC GLASS SYSTEMS

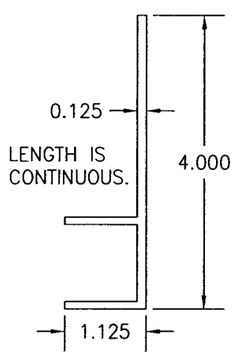

16 F-PERIMITER ANCHOR USED WITH WITH I.G. GLASS SYSTEMS

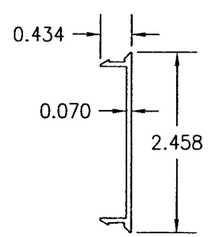

17 HORIZONTAL FRAMING FILLER

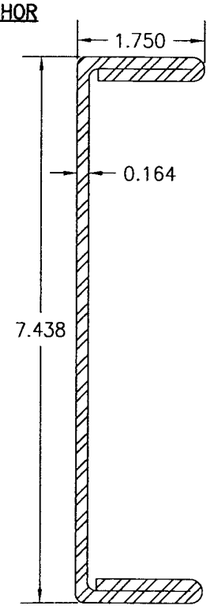

20 MULLION REINFORCEMENT

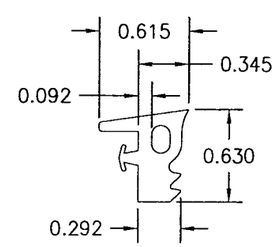

30 EXTERIOR GLAZING FIXED GASKET

DRAWN BY: W.W.S.	CHECKED BY: W.W.S.
PLOT: 1=2	DATE: 03/19/13

NO.	REVISION DESCRIPTION	BY	DATE

DRAWING TITLE
10 13/16" DEEP 1600 SYSTEM 1 CURTAIN WALL (L.M.I.)

JOB INFORMATION:

KAWNEER COMPANY, INC.
555 GUTHRIDGE COURT
NORCROSS, GA 30092
770-449-5555

CONSULTANTS
W. W. SCHAEFER ENGINEERING & CONSULTING, P.A. (REG. NO. F-14980)
7480 150TH COURT NORTH
PALM BEACH GARDENS, FL 33418
PHONE: 561-744-3424

CERTIFICATION
SEP 07 2016
WARREN W. SCHAEFER, P.E.
P.E. NO. 113497

DRAWING NO. 1794T
REV. A
SHEET NO. 11 OF 12

ITEM #	ITEM DESCRIPTION	MANUFACTURER/NOTES
	PARTS	
1	VERTICAL AND HORIZONTAL FRAMING USED WITH MONOLITHIC GLASS	6063–T6 ALUMINUM
2	ALTERNATE HORIZONTAL FRAMING USED WITH MONOLITHIC GLASS	6063–T6 ALUMINUM
3	VERTICAL AND HORIZONTAL FRAMING USED WITH I.G. GLASS	6063–T6 ALUMINUM
4	ALTERNATE HORIZONTAL FRAMING USED WITH I.G. GLASS	6063–T6 ALUMINUM
5	PRESSURE PLATE	6063–T6 ALUMINUM
6	PRESSURE PLATE	6063–T6 ALUMINUM
7	PRESSURE PLATE	6063–T6 ALUMINUM
8	PRESSURE PLATE	6063–T6 ALUMINUM
9	SHEAR BLOCK	6063–T6 ALUMINUM
10	STANDARD PRESSURE PLATE COVER	6063–T6 ALUMINUM
11	DOOR POCKET FILLER	6063–T6 ALUMINUM
12	T–ANCHOR	6063–T6 ALUMINUM
13	F–ANCHOR	6063–T6 ALUMINUM
14	U–ANCHOR	6063–T6 ALUMINUM
15	F–PERIMITER ANCHOR USED WITH MONOLITHIC GLASS SYSTEMS	6063–T6 ALUMINUM
16	F–PERIMITER ANCHOR USED WITH I.G. GLASS SYSTEMS	6063–T6 ALUMINUM
17	HORIZONTAL FRAMING FILLER	6063–T6 ALUMINUM
20	MULLION REINFORCEMENT	ASTM A–653/A–04A GRADE 50
23	5" X 3" X 3/8" X 6" LONG ANGLE	50 KSI STEEL
	SEALS & SEALANTS	
28	FIXED GASKET	TREMCO TR4726P EPDM DUROMETER 70 +/–5
29	THERMAL SEPERATOR	TREMCO TR–4015P EPDM DUROMETER 60 +/–5
30	EXTERIOR GLAZING FIXED GASKET	TREMCO TR–4014P EPDM DUROMETER 60 +/–5
31	5/16" X 7/16" GLAZING TAPE	NORTON V2100 FOAM OR TREMCO 920
32	STEEL TO ALUMINUM SEPERATOR	THERMO–TOK TN–9004
	FASTENERS	
36	1/4" X 1" HWHTF TYPE "AB" SCREW 300 SERIES S.S.	WITHIN 3" FROM ENDS & 9" MAX. O.C. (300 SERIES S.S.)
37	1/4–20 X 2" FNTCS 300 SERIES S.S.	WITHIN 9" FROM ENDS & 9" MAX. O.C. (GR. 5 STEEL)
38A	NO. 8 X 1/2" FHTFS 300 SERIES S.S.	8 PER U–ANCHOR AT INTERMEDIATE MEMBERS (4 PER SIDE OF MEMBER)
38B	NO. 8 X 1/2" FHTFS 300 SERIES S.S.	6 PER U–ANCHOR AT SIDE JAMB MEMBERS (AT 1 SIDE OF MEMBER)
39	NO. 12 X 1 1/2" FHTF TYPE "B" SCREW 300 SERIES S.S.	2 PER SHEAR BLOCK (300 SERIES S.S.)
40	NO. 12 X 7/16" PHTF TYPE "AB" SCREW 300 SERIES S.S.	4 PER SHEAR BLOCK (430 SERIES S.S.)
41	NO. 12 X 1" PHTF TYPE "AB" SCREW 300 SERIES S.S.	2 PER SHEAR BLOCK (300 SERIES S.S.)

DRAWN BY: W.W.S.
CHECKED BY: W.W.S.
PLOT: 1=2
DATE: 03/19/13

NO.	REVISION DESCRIPTION	BY	DATE

DRAWING TITLE
10 13/16" DEEP 1600 SYSTEM 1 CURTAIN WALL (L.M.I.)

JOB INFORMATION:
KAWNEER COMPANY, INC.
555 GUTHRIDGE COURT
NORCROSS, GA 30092
770–449–5555

CONSULTANTS
W. W. SCHAEFER ENGINEERING & CONSULTING, P.A. (REG. NO. F–14980)
7480 150TH COURT NORTH
PALM BEACH GARDENS, FL 33418
PHONE: 561–744–3424

CERTIFICATION
SEP 07 2016
WARREN W. SCHAEFER, P.E.
P.E. NO. 113497

DRAWING NO. 1794T
REV. A
SHEET NO. 12 OF 12