REVISIONS			
REV	DESCRIPTION	DATE	APPROVED

NOTES:

1) THE PRODUCT SHOWN HEREIN IS DESIGNED AND MANUFACTURED TO COMPLY WITH REQUIREMENTS OF THE 2006 INTERNATIONAL BUILDING CODE AND THE 2006 INTERNATIONAL RESIDENTIAL CODE WITH STATE OF TEXAS MODIFICATIONS.
2) WOOD FRAMING AND MASONRY OPENING TO BE DESIGNED AND ANCHORED TO PROPERLY TRANSFER ALL LOADS TO STRUCTURE. FRAMING AND MASONRY OPENING IS THE RESPONSIBILITY OF THE ARCHITECT OR ENGINEER OF RECORD.
3) 1X BUCK OVER MASONRY/CONCRETE IS OPTIONAL. WHERE 1X BUCK IS NOT USED DISSIMILAR MATERIALS MUST BE SEPARATED WITH APPROVED COATING OR MEMBRANE. SELECTION OF COATING OR MEMBRANE IS THE RESPONSIBILITY OF THE ARCHITECT OR ENGINEER OF RECORD.
4) ALLOWABLE STRESS INCREASE OF 1/3 WAS NOT USED IN THE DESIGN OF THE PRODUCT SHOWN HEREIN. WIND LOAD DURATION FACTOR Cd=1.6 WAS USED FOR WOOD ANCHOR CALCULATIONS.
5) FRAME MATERIAL: ALUMINUM 6063–T5.
6) UNITS MUST BE GLAZED PER ASTM E1300–04, SEE SHEET 5 FOR GLASS OPTIONS.
7) APPROVED IMPACT PROTECTIVE SYSTEM IS NOT REQUIRED FOR THIS PRODUCT IN WIND BORNE DEBRIS REGIONS.
8) SHIM AS REQUIRED AT EACH INSTALLATION ANCHOR WITH LOAD BEARING SHIM. SHIM WHERE SPACE OF 1/16" OR GREATER OCCURS. MAXIMUM ALLOWABLE SHIM STACK TO BE 1/4".
9) FOR ANCHORING HEAD AND SILL INTO MASONRY/CONCRETE USE 1/4" TAPCONS WITH SUFFICIENT LENGTH TO ACHIEVE A 1 1/4" MINIMUM EMBEDMENT INTO SUBSTRATE WITH 2 1/2'' MINIMUM EDGE DISTANCE. LOCATE ANCHORS AS SHOWN IN ELEVATIONS AND INSTALLATION DETAILS.
10) FOR ANCHORING JAMBS INTO MASONRY/CONCRETE USE 3/16" TAPCONS WITH SUFFICIENT LENGTH TO ACHIEVE A 1 1/4" MINIMUM EMBEDMENT INTO SUBSTRATE WITH 2 1/2'' MINIMUM EDGE DISTANCE. LOCATE ANCHORS AS SHOWN IN ELEVATIONS AND INSTALLATION DETAILS.
11) FOR ANCHORING HEAD AND SILL INTO WOOD FRAMING OR 2X BUCK USE 1/4" WOOD SCREWS WITH SUFFICIENT LENGTH TO ACHIEVE A 1 3/4" MINIMUM EMBEDMENT INTO SUBSTRATE. LOCATE ANCHORS AS SHOWN IN ELEVATIONS AND INSTALLATION DETAILS.
12) FOR ANCHORING JAMBS INTO WOOD FRAMING OR 2X BUCK USE #10 WOOD SCREWS WITH SUFFICIENT LENGTH TO ACHIEVE A 1 3/8" MINIMUM EMBEDMENT INTO SUBSTRATE. LOCATE ANCHORS AS SHOWN IN ELEVATIONS AND INSTALLATION DETAILS.
13) FOR ANCHORING HEAD AND SILL INTO METAL STRUCTURE USE 1/4" SMS OR SELF DRILLING SCREWS SCREWS WITH SUFFICIENT LENGTH TO ACHIEVE 3 THREADS MINIMUM BEYOND STRUCTURE INTERIOR WALL. LOCATE ANCHORS AS SHOWN IN ELEVATIONS AND INSTALLATION DETAILS.
14) FOR ANCHORING JAMB INTO METAL STRUCTURE USE #10 SMS OR SELF DRILLING SCREWS SCREWS WITH SUFFICIENT LENGTH TO ACHIEVE 3 THREADS MINIMUM BEYOND STRUCTURE INTERIOR WALL. LOCATE ANCHORS AS SHOWN IN ELEVATIONS AND INSTALLATION DETAILS.
15) ALL FASTENERS TO BE CORROSION RESISTANT.
16) INSTALLATION ANCHORS SHALL BE INSTALLED IN ACCORDANCE WITH ANCHOR MANUFACTURER'S INSTALLATION INSTRUCTIONS, AND ANCHORS SHALL NOT BE USED IN SUBSTRATES WITH STRENGTHS LESS THAN THE MINIMUM STRENGTH SPECIFIED BELOW:
    A. WOOD – MINIMUM SPECIFIC GRAVITY OF G=0.42
    B. CONCRETE – MINIMUM COMPRESSIVE STRENGTH OF 3,192 PSI.
    C. MASONRY – STRENGTH CONFORMANCE TO ASTM C–90, GRADE N, TYPE 1 (OR GREATER).
    D. METAL STRUCTURE: STEEL 18GA, 33KSI OR ALUMINUM 6063–T5 1/8" THICK MINIMUM

SIGNED: 05/02/2012

TABLE OF CONTENTS

SHEET NO.	DESCRIPTION
1	NOTES
2 – 4	ELEVATIONS
5	B.O.M. AND GLAZING DETAILS
6 – 7	CROSS SECTIONS
8 – 12	INSTALLATION DETAILS

LA CANTINA DOORS
3817 OCEAN RANCH BLVD., SUITE 114
OCEANSIDE CA, 92056

OUTSWING BI–FOLD DOOR
ALUMINUM THERMALLY BROKEN HURRICANE
NOTES

DRAWN:	DWG NO.	REV
V.L.	08–01610	–

SCALE	DATE	SHEET
NTS	12/12/11	1 OF 12

Luis R. Lomas P.E.
TX No.: 101889

REVISIONS			
REV	DESCRIPTION	DATE	APPROVED

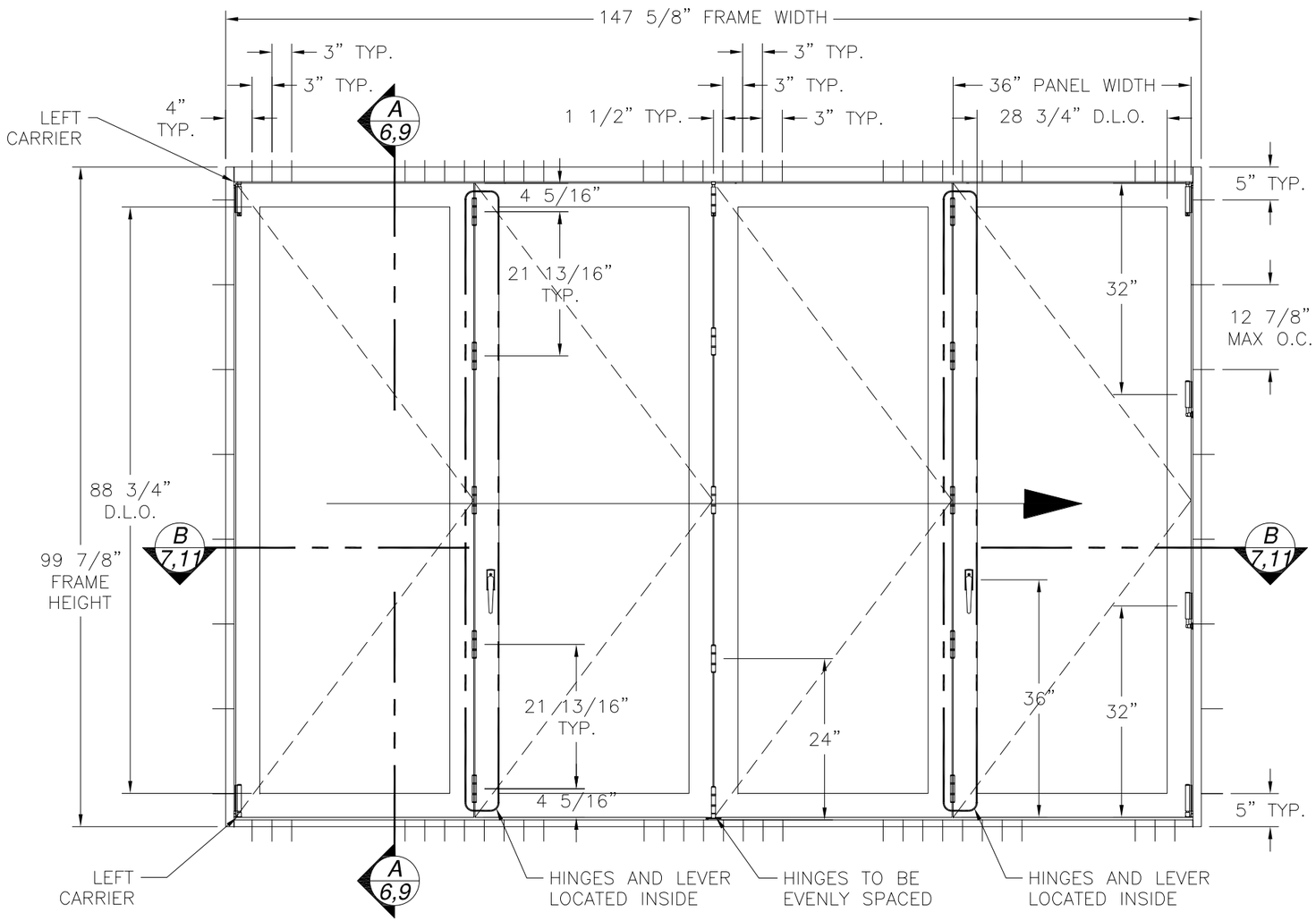

4R OUTSWING BIFOLD DOOR

EXTERIOR VIEW WITH STANDARD SILL

DESIGN PRESSURE RATING	*IMPACT RATING*
±70PSF	*LARGE AND SMALL MISSILE IMPACT*

MISSILE LEVEL D, WIND ZONE 4, AND HVHZ

HARDWARE SCHEDULE
A. PIVOT HINGE E3CPSS BY CENTOR (ITEM 23)
B OFFSER HINGE E3HHSOL BY CENTOR (ITEM 24)
C STRAIGHT HINGE E3HSS BY CENTOR (ITEM 50)
D LEFT CARRIER E3CLCSS BY CENTOR (ITEM 48)
E RIGHT CARRIER E3CRCSS BY CENTOR (ITEM 49)
F SHOOT BOLT DL01-6003 BY INTERLOCK (ITEM 35)
G SHOOT BOLT DL01-6002 BY INTERLOCK (ITEM35)
H LATCH & DEAD BOLT SET DL01-6101-502 (ITEM 30)

SIGNED: 05/02/2012

LA CANTINA DOORS
3817 OCEAN RANCH BLVD., SUITE 114
OCEANSIDE CA, 92056

OUTSWING BI-FOLD DOOR
ALUMINUM THERMALLY BROKEN HURRICANE
4R ELEVATION

DRAWN:	DWG NO.	REV
V.L.	08-01610	-
SCALE NTS	DATE 12/12/11	SHEET 2 OF 12

STATE OF TEXAS
LUIS R. LOMAS
101889
LICENSED
PROFESSIONAL ENGINEER

Luis R. Lomas P.E.
TX No.: 101889

REVISIONS			
REV	DESCRIPTION	DATE	APPROVED

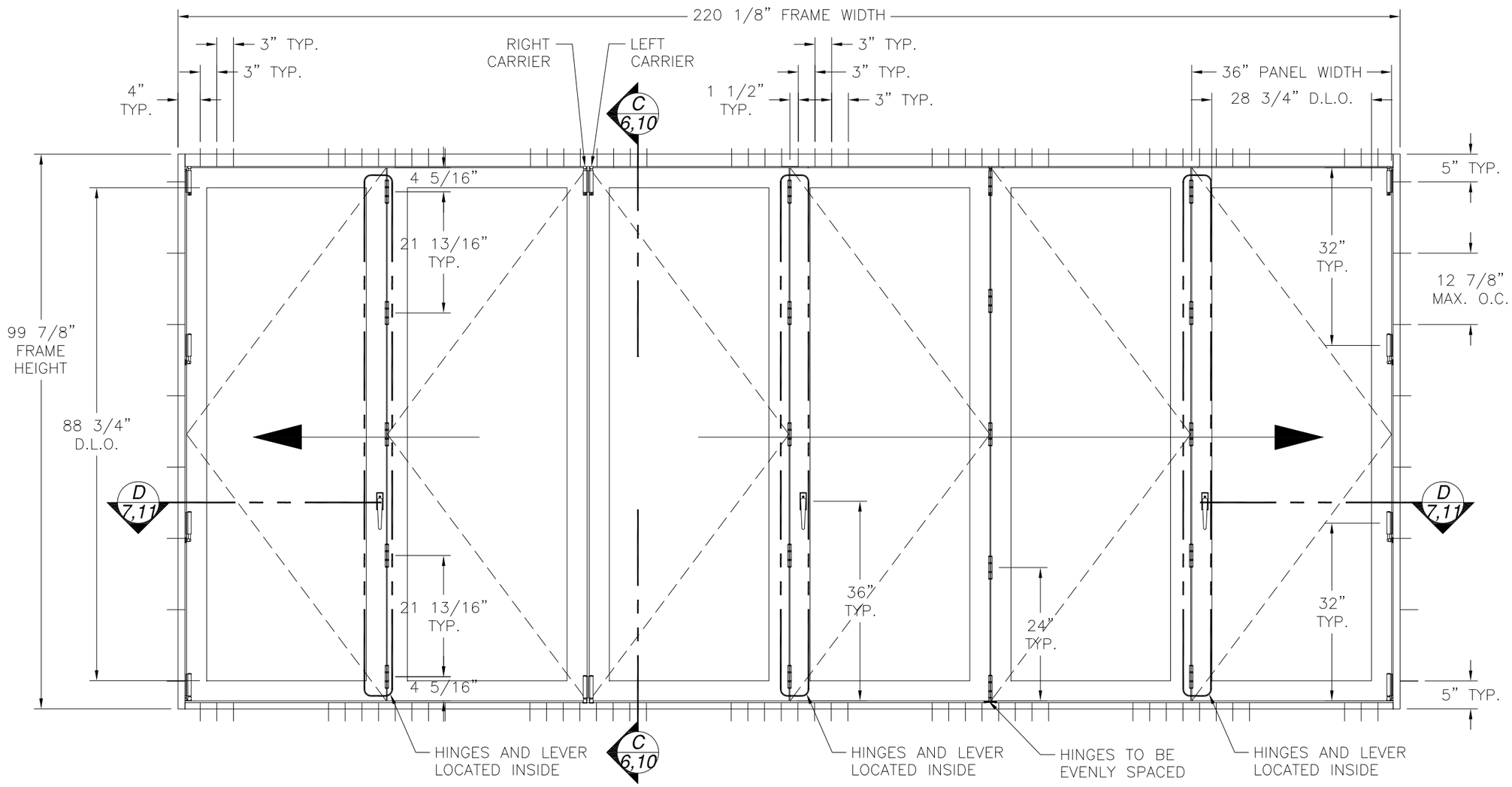

SIGNED: 05/02/2012

2L4R OUTSWING BIFOLD DOOR

EXTERIOR VIEW WITH ZERO STEP SILL

DESIGN PRESSURE RATING	IMPACT RATING
+46.7/60.0PSF	LARGE AND SMALL MISSILE IMPACT
THIS SYSTEM WAS NOT TESTED FOR WATER INFILTRATION AND IS TO BE INSTALLED ONLY WHERE THE WATER REQUIREMENT IS NOT NEEDED	

MISSILE LEVEL D, WIND ZONE 4 AND HVHZ

LA CANTINA DOORS
3817 OCEAN RANCH BLVD., SUITE 114
OCEANSIDE CA, 92056

OUTSWING BI-FOLD DOOR
ALUMINUM THERMALLY BROKEN HURRICANE
2L4R ELEVATION

DRAWN:	DWG NO.	REV
V.L.	08-01610	–

SCALE	DATE	SHEET
NTS	12/12/11	3 OF 12

STATE OF TEXAS
LUIS R. LOMAS
101889
LICENSED
PROFESSIONAL ENGINEER

Luis R. Lomas P.E.
TX No.: 101889

REVISIONS			
REV	DESCRIPTION	DATE	APPROVED

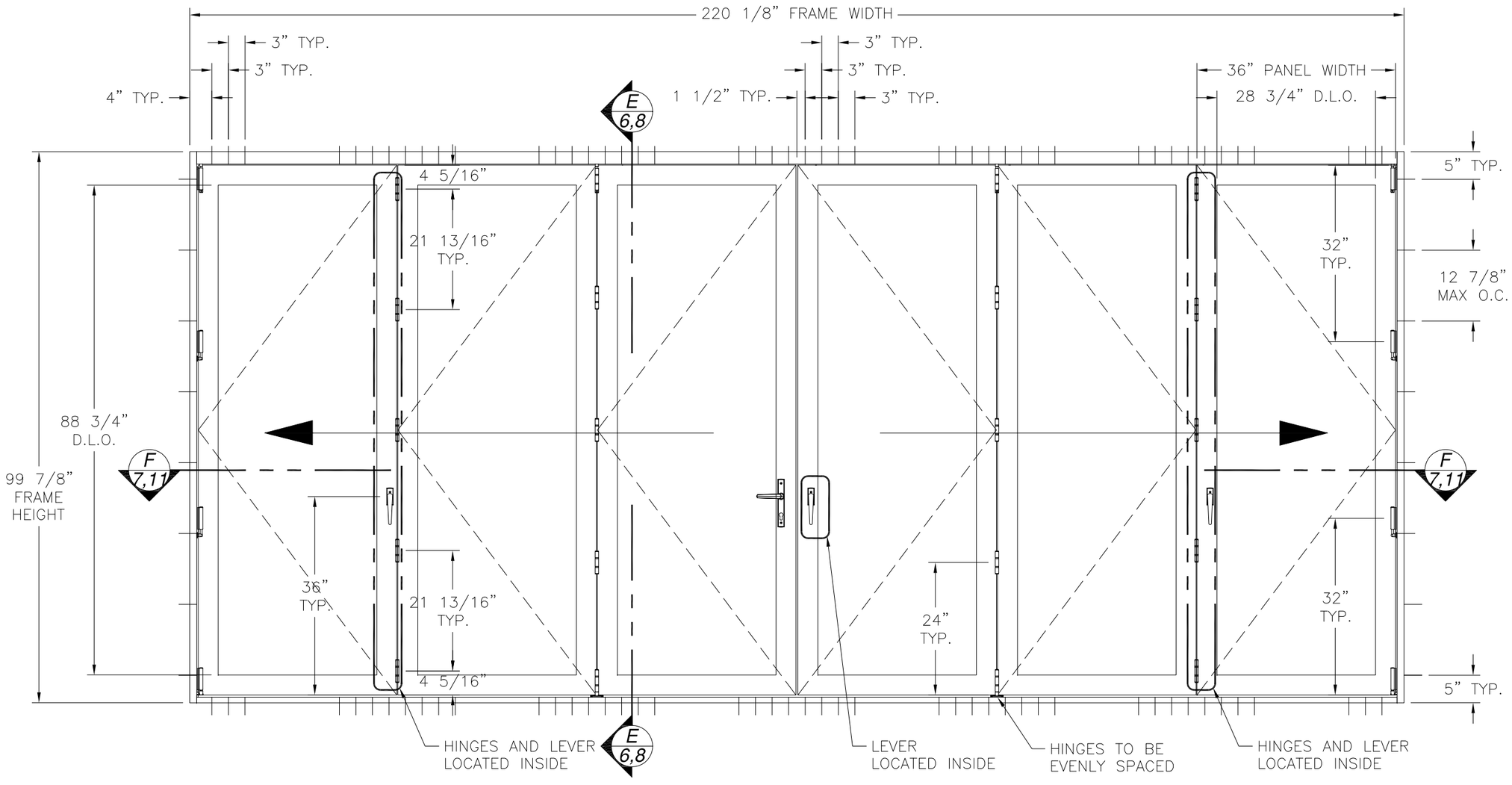

SIGNED: 05/02/2012

3L3R OUTSWING BIFOLD DOOR

EXTERIOR VIEW WITH SILL EXTENSION

DESIGN PRESSURE RATING	IMPACT RATING
±70PSF	LARGE AND SMALL MISSILE IMPACT

MISSILE LEVEL D, WIND ZONE 4, AND HVHZ

LA CANTINA DOORS
3817 OCEAN RANCH BLVD., SUITE 114
OCEANSIDE CA, 92056

OUTSWING BI-FOLD DOOR
ALUMINUM THERMALLY BROKEN HURRICANE
3L3R ELEVATION

DRAWN:	DWG NO.	REV
V.L.	08-01610	–
SCALE NTS	DATE 12/12/11	SHEET 4 OF 12

STATE OF TEXAS
LUIS R. LOMAS
101889
LICENSED
PROFESSIONAL ENGINEER

Luis R. Lomas P.E.
TX No.: 101889

REVISIONS			
REV	DESCRIPTION	DATE	APPROVED

PARTS LIST

NO.	PART NUMBER	DESCRIPTION	MANUFACTURER	MATERIAL
1	LCDTBSH	ALUMINUM HEAD CORE	SAPA	ALUMINUM 6063-T5
2	LCDTBHE	ALUMINUM EXTERIOR FASCIA	SAPA	ALUMINUM 6063-T5
3	LCDTBHI	ALUMINUM INTERIOR FASCIA	SAPA	ALUMINUM 6063-T5
4	LCDTBSJ	JAMB CORE	SAPA	ALUMINUM 6063-T5
5	LCDTBJE	JAMB EXTERIOR	SAPA	ALUMINUM 6063-T5
6	LCDTBJI	JAMB INTERIOR	SAPA	ALUMINUM 6063-T5
7	LCDTBJS	JAMB STOP	SAPA	ALUMINUM 6063-T5
8	LCDTBSS	ALUMINUM SILL	SAPA	ALUMINUM 6063-T5
9	LCDIRSE	ALUMINUM SILL EXTENSION	PARAMOUNT	ALUMINUM 6063-T5
10	QDS650	WEATHER SEAL	SCHLEGEL	
11	23BVE	U CHANNEL INSERT	THERMOPRENE	
12	LCDTBSCCA	STILE/RAIL CORE ASSEMBLY	SAPA	ALUMINUM 6063-T5
13	LCDTBSIFM	STILE/RAIL SMALL FASCIA	SAPA	ALUMINUM 6063-T5
14	LCDTBSEFM	STILE/RAIL LARGE FASCIA	SAPA	ALUMINUM 6063-T5
15	LCDTBBM	GLAZING BEAD	SAPA	ALUMINUM 6063-T5
16	LCDT.BSPGT	SPIGOT	SAPA	ALUMINUM 6063-T5
17	LCDT.BNP	NUTPLATE	SAPA	ALUMINUM 6063-T5
18	QEZD-375	DOOR WEATHER SEAL	SCHELEGEL	
19	PP0777	ASTRAGAL WEATHER SEAL	BANDLOCK	
20	BL-4182	STRIKE DOOR MEETING SEAL (A)	BANDLOCK	
21	QEZD-260	STRIKE DOOR MEETING SEAL (B)	SCHELEGEL	
22	12142112090500	PIVOT DOOR WEATHER SEAL	BANDLOCK	
23	E3CPSS	PIVOT SET	CENTOR	
24	E3HHSOL	OFFSET HINGE SET	CENTOR	
25	E3CISS	INTERMEDIATE CARRIER SET	CENTOR	
26	BF01-6501	TWIN BOLT LOCK GEAR (TBL)	INTERLOCK USA	
27	DL01-4001	STRIKE PLATE	INTERLOCK USA	
28	DL01-2005	STRIKE DUST CAP	INTERLOCK USA	
29	DL01-6009	LEVER COMPRESSION LOCK GEAR	INTERLOCK USA	
30	DL01-6101-502	ACTIVE HANDLE SET WITH BACKPLATE	INTERLOCK USA	
31	BF01-6510-502	TBL HANDLE WITH BACKPLATE	INTERLOCK USA	
32	DL01-2013-00B	SHOOT BOLT GUIDE	INTERLOCK USA	
33	LCDIMPDB	SHOOT BOLT DOOR BLOCK	BANDLOCK	
34	DL01-6003	SHOOT BOLT ROD TOP	INTERLOCK	
35	DL01-6002	SHOOT BOLT ROD BOTTOM	INTERLOCK USA	
36	DL01-6043	SHOOT BOLT PIN	INTERLOCK USA	
37	TAPFL1228	#12X1 3/4" FH SPIGOT SCREW	MESA	
38	SHCM0621	M6.1X20MM NUTPLATE SCREW	MESA	STAINLESS STEEL
39	DL01-5021	#10X3/8" STRIKE PLATE SCREW	INTERLOCK USA	STIANLESS STEEL
40	TAPFLU1016	#10X1" HINGE SCREW	MESA	STAINLES STEEL

PARTS LIST

NO.	PART NUMBER	DESCRIPTION	MANUFACTURER	MATERIAL
41	BF01-2001	TBL SPACER	INTERLOCK USA	
42	BF01-5001-065	M5X32MM TBL BACKPLATE SCREW	INTERLOCK USA	
43	DL01-5021	8GX7.5MM LCL BACKPLATE SCREW	INTERLOCK USA	STAINLESS STEEL
44	TAPFLU1008	#10X1/2" ASTRAGAL SCREW	MESA	STAINLESS STEEL
45	TPR561	GLAZING SPACER	CR LAWRENCE	
46	995	SILICONE	DOW CORNING	
47	LCDZS225	ALUMINUM ZERO STEP FLUSH SILL	SAPA	ALUMINUM 6063-T5
48	E3CLCSS	LEFT CARRIER SET	CENTOR	
49	E3CRCSS	RIGHT CARRIER SET	CENTOR	
50	E3HSS	STRAIGHT HINGE SET	CENTOR	
51	LCDTBIB	GLAZING BEAD - DUAL GLAZE	SAPA	ALUMINUM 6063-T5
52	LCDB8M	ASTRAGAL	SAPA	ALUMINUM 6063-T5
53	BL-4209	GLAZING SEAL	BANDLOCK	SANTOPRENE

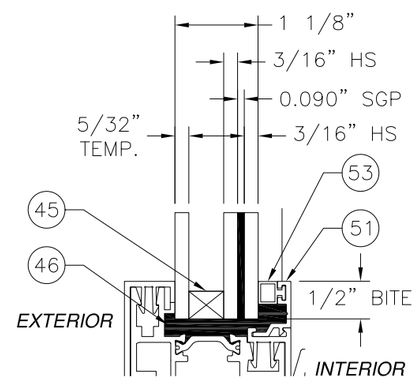

GLAZING "A"

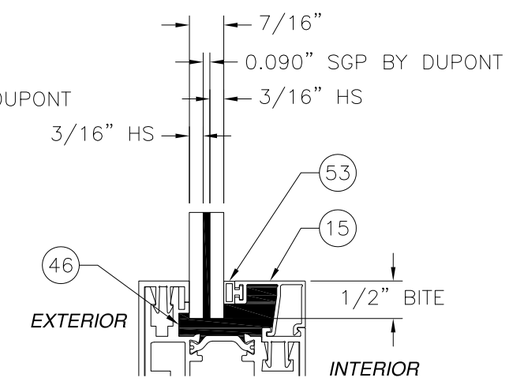

GLAZING "B"

ITEMS 16, 17, 20, 21, 24 ,26-28, 32-44 ARE USED BUT NOT SHOWN.

SIGNED: 05/02/2012

LA CANTINA DOORS
3817 OCEAN RANCH BLVD., SUITE 114
OCEANSIDE CA, 92056

OUTSWING BI-FOLD DOOR
ALUMINUM THERMALLY BROKEN HURRICANE
B.O.M. AND GLAZING DETAILS

DRAWN:	DWG NO.	REV
V.L.	08-01610	-
SCALE NTS	DATE 12/12/11	SHEET 5 OF 12

STATE OF TEXAS
LUIS R. LOMAS
101889
LICENSED
PROFESSIONAL ENGINEER

Luis R. Lomas P.E.
TX No.: 101889

REVISIONS			
REV	DESCRIPTION	DATE	APPROVED

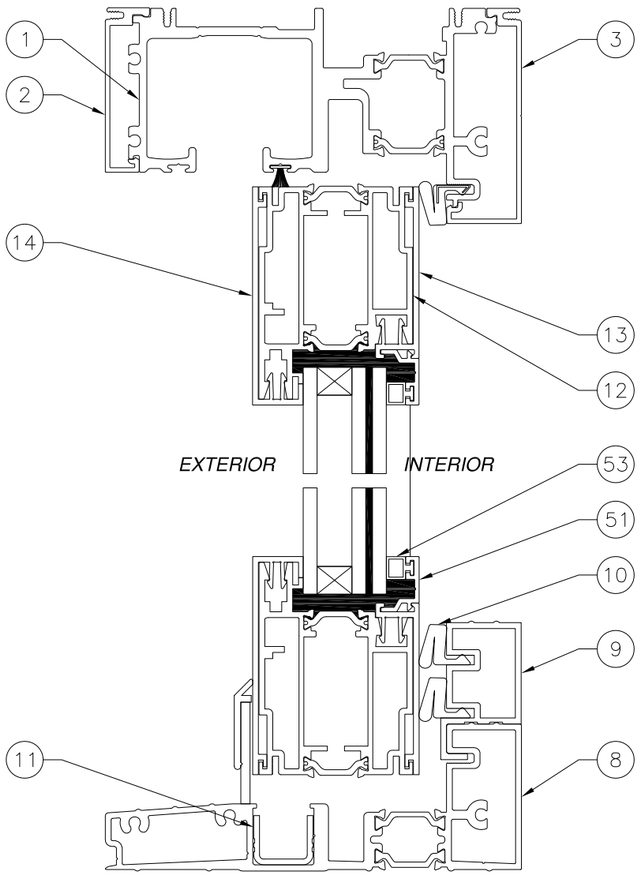

E/6 VERTICAL SECTION
WITH SILL EXTENSION

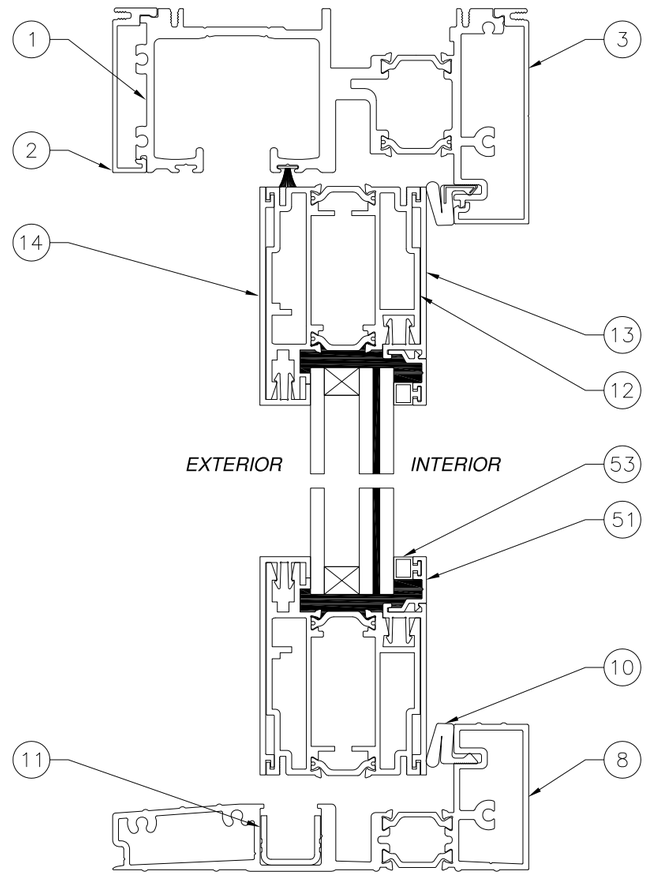

A/6 VERTICAL SECTION
WITH STANDARD SILL

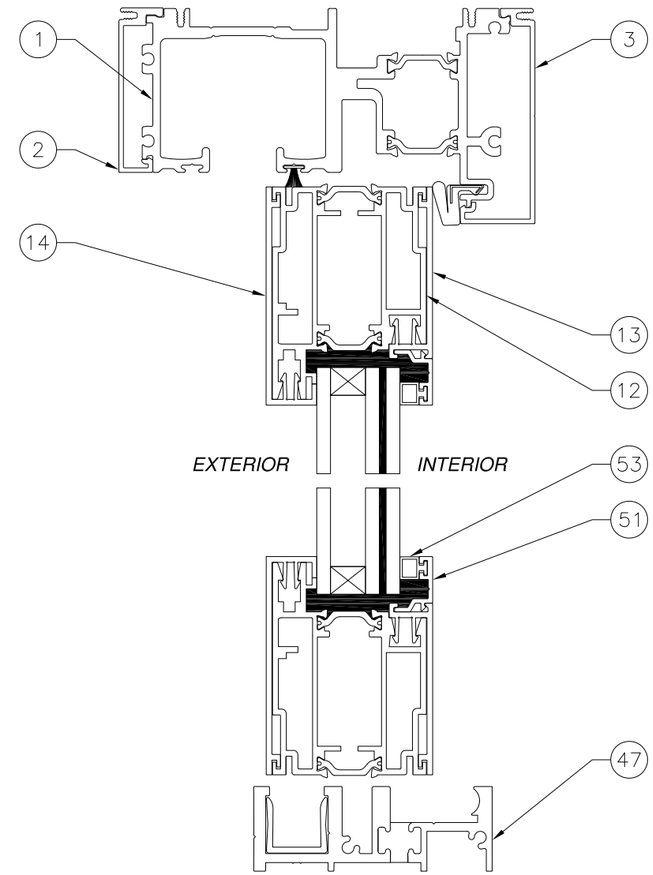

C/6 VERTICAL SECTION
WITH ZERO STEP SILL

SIGNED: 05/02/2012

LA CANTINA DOORS
3817 OCEAN RANCH BLVD., SUITE 114
OCEANSIDE CA, 92056

OUTSWING BI-FOLD DOOR
ALUMINUM THERMALLY BROKEN HURRICANE
VERICAL CROSS SECTIONS

DRAWN:	DWG NO.	REV
V.L.	08-01610	–
SCALE NTS	DATE 12/12/11	SHEET 6 OF 12

Luis R. Lomas P.E.
TX No.: 101889

REVISIONS			
REV	DESCRIPTION	DATE	APPROVED

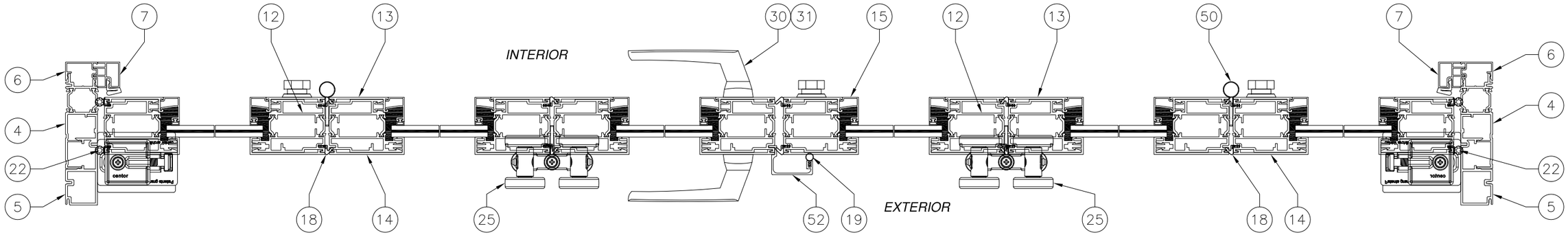

F/7 3L3R HORIZONTAL SECTION

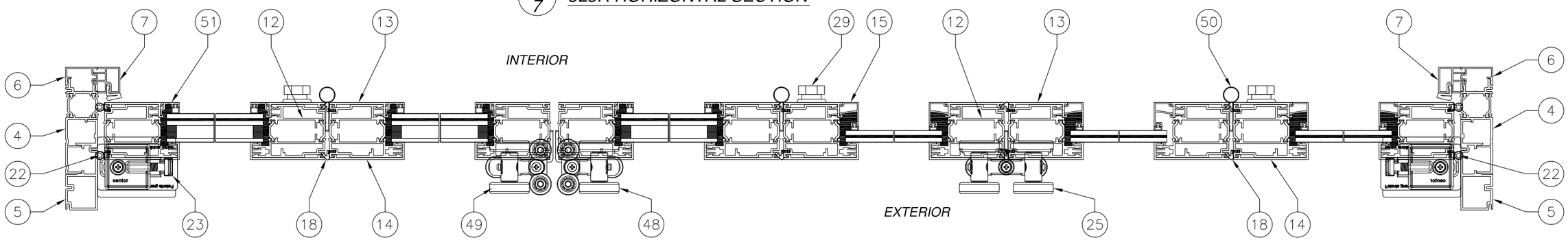

D/7 2L4R HORIZONTAL SECTION

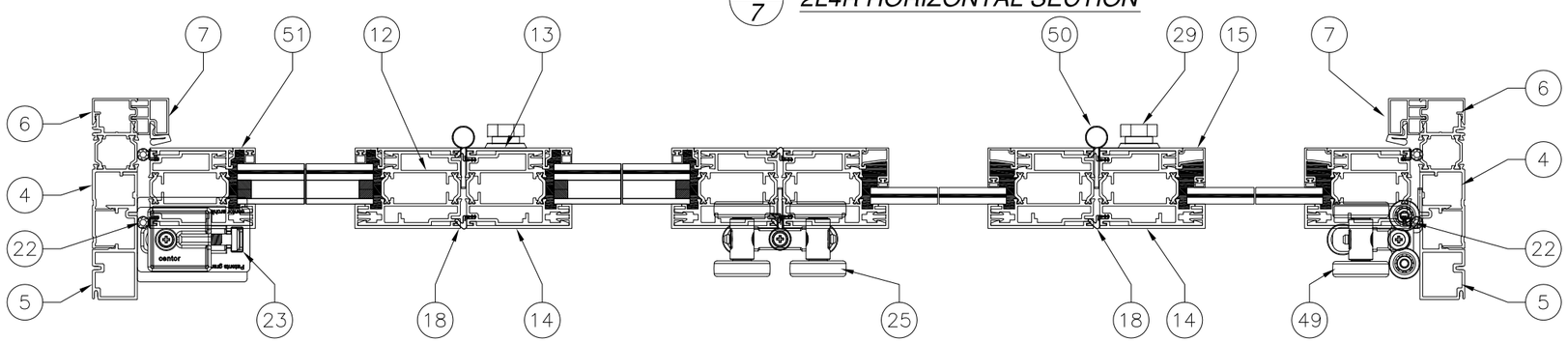

B/7 4R HORIZONTAL SECTION

SIGNED: 05/02/2012

LA CANTINA DOORS
3817 OCEAN RANCH BLVD., SUITE 114
OCEANSIDE CA, 92056

OUTSWING BI-FOLD DOOR
ALUMINUM THERMALLY BROKEN HURRICANE
HORIZONTAL CROSS SECTION

DRAWN:	DWG NO.	REV
V.L.	08-01610	–
SCALE NTS	DATE 12/12/11	SHEET 7 OF 12

STATE OF TEXAS
LUIS R. LOMAS
101889
LICENSED
PROFESSIONAL ENGINEER

Luis R. Lomas P.E.
TX No.: 101889

REVISIONS			
REV	DESCRIPTION	DATE	APPROVED

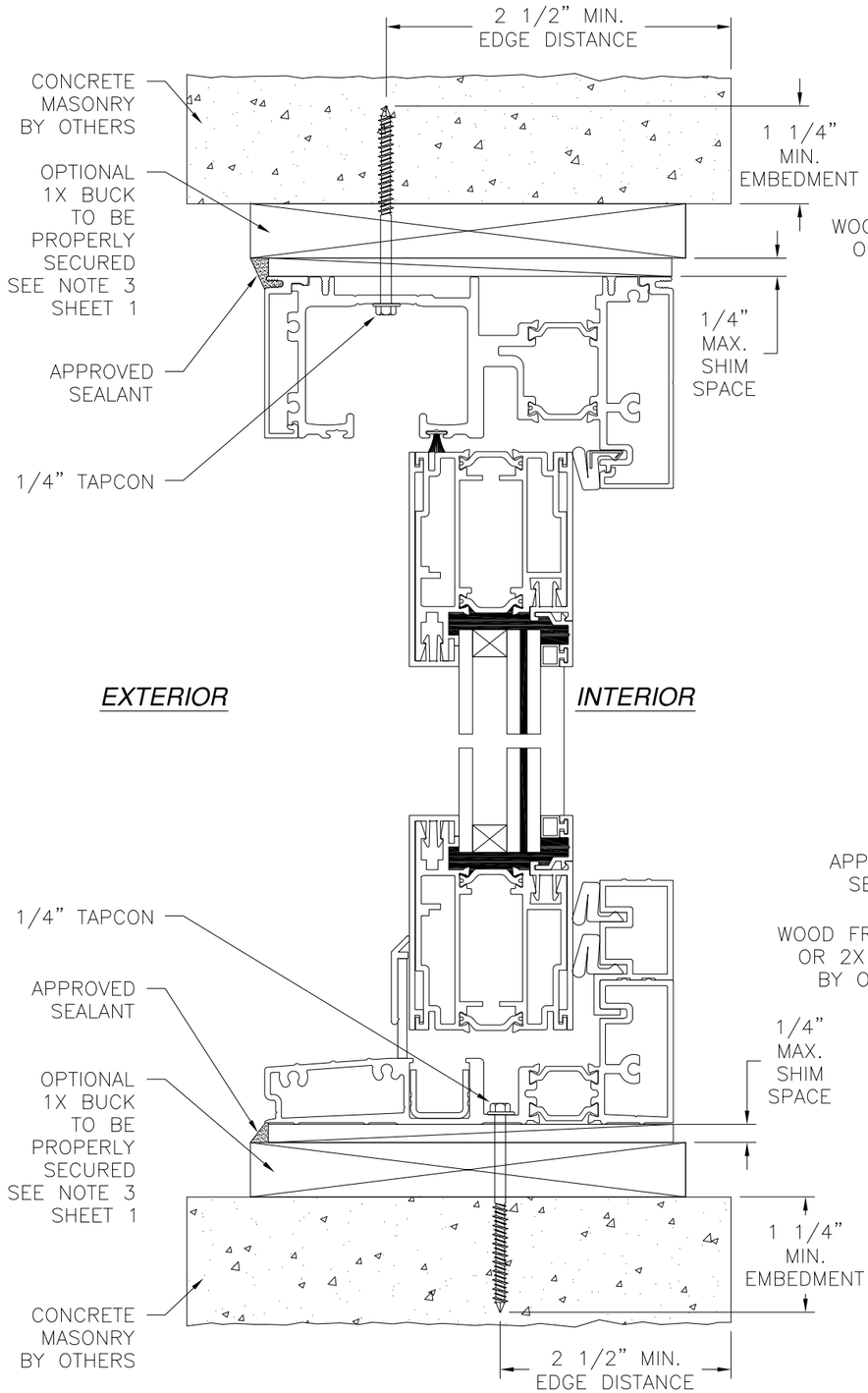

E/8 VERTICAL CROSS SECTION
CONCRETE/MASONRY INSTALLATION

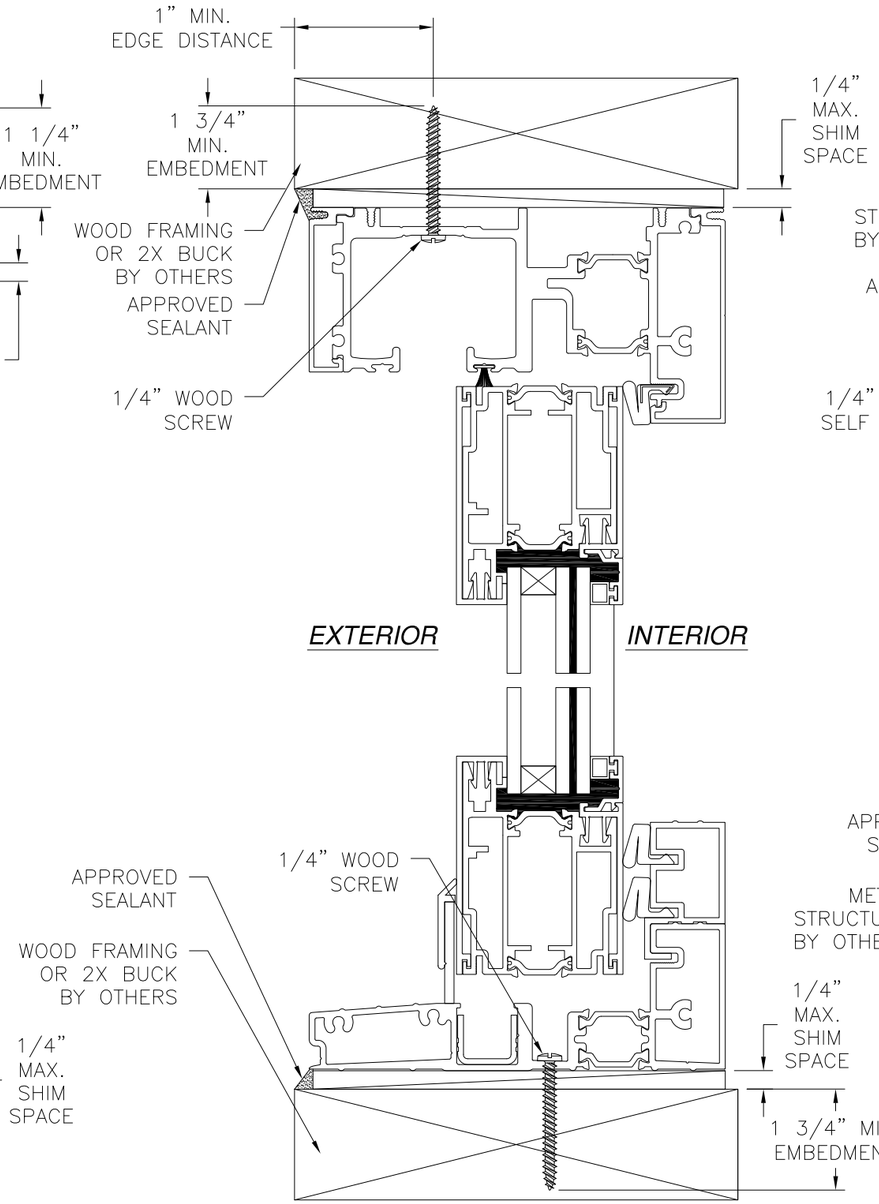

E/8 VERTICAL CROSS SECTION
WOOD FRAMING OR 2X BUCK INSTALLATION

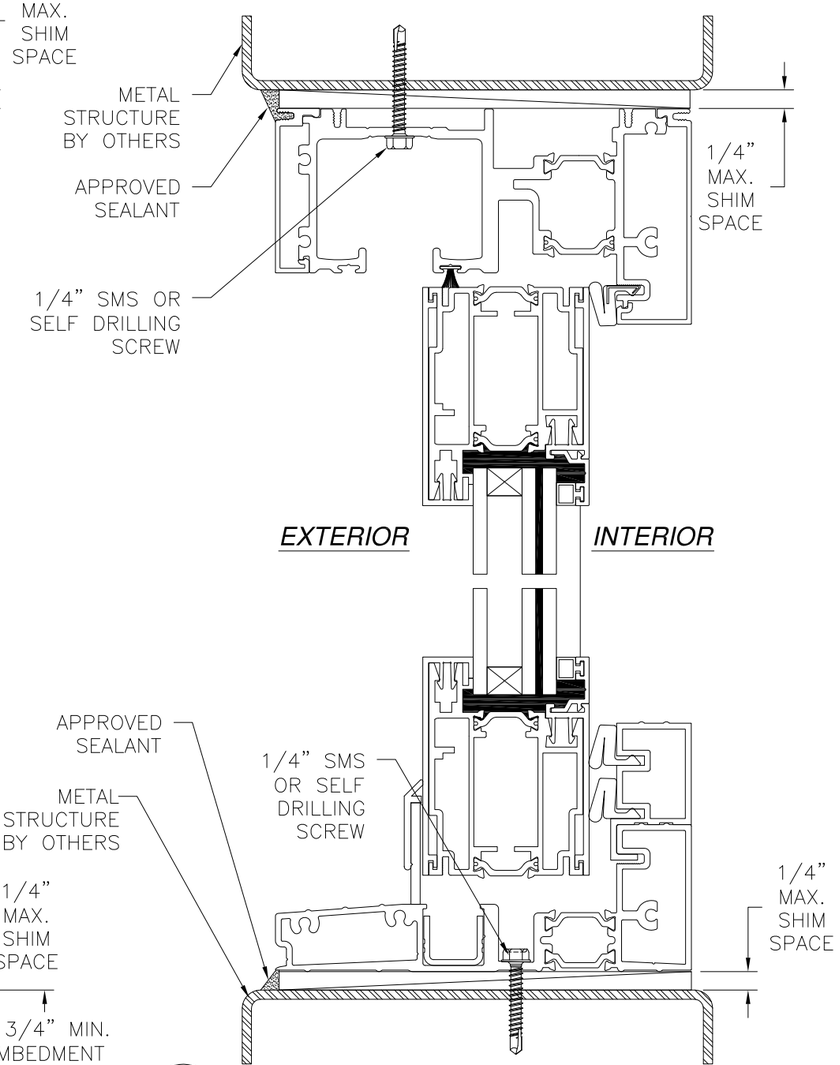

E/8 VERTICAL CROSS SECTION
METAL STRUCTURE INSTALLATION

SIGNED: 05/02/2012

NOTE:
INTERIOR AND EXTERIOR FINISHES, BY OTHERS, NOT SHOWN FOR CLARITY.

LA CANTINA DOORS
3817 OCEAN RANCH BLVD., SUITE 114
OCEANSIDE CA, 92056

OUTSWING BI-FOLD DOOR
ALUMINUM THERMALLY BROKEN HURRICANE
INSTALLATION DETAILS WITH SILL EXTENSION

DRAWN: V.L.	DWG NO. 08-01610	REV –
SCALE NTS	DATE 12/12/11	SHEET 8 OF 12

Luis R. Lomas P.E.
TX No.: 101889

REVISIONS			
REV	DESCRIPTION	DATE	APPROVED

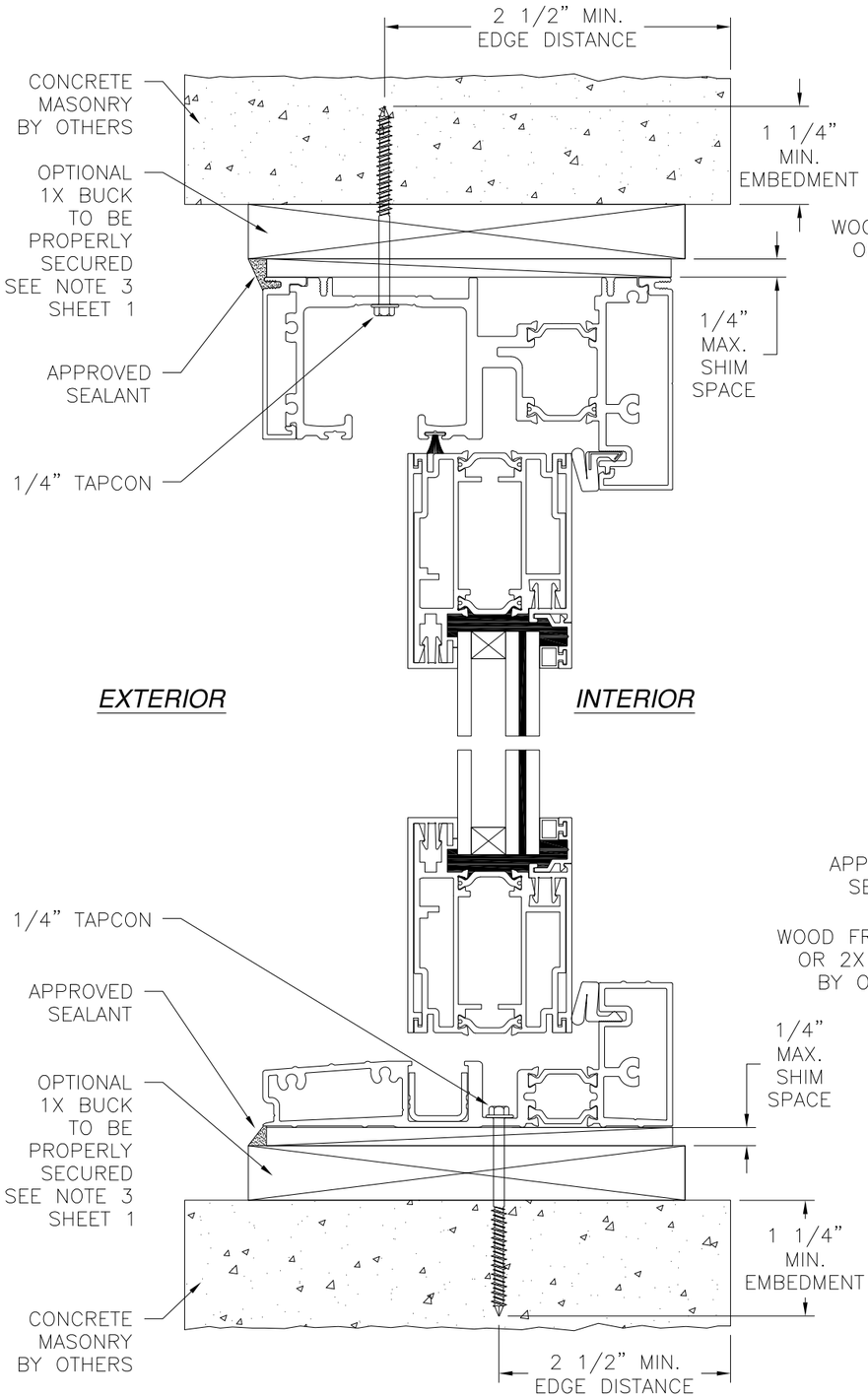

A/9 VERTICAL CROSS SECTION
CONCRETE/MASONRY INSTALLATION

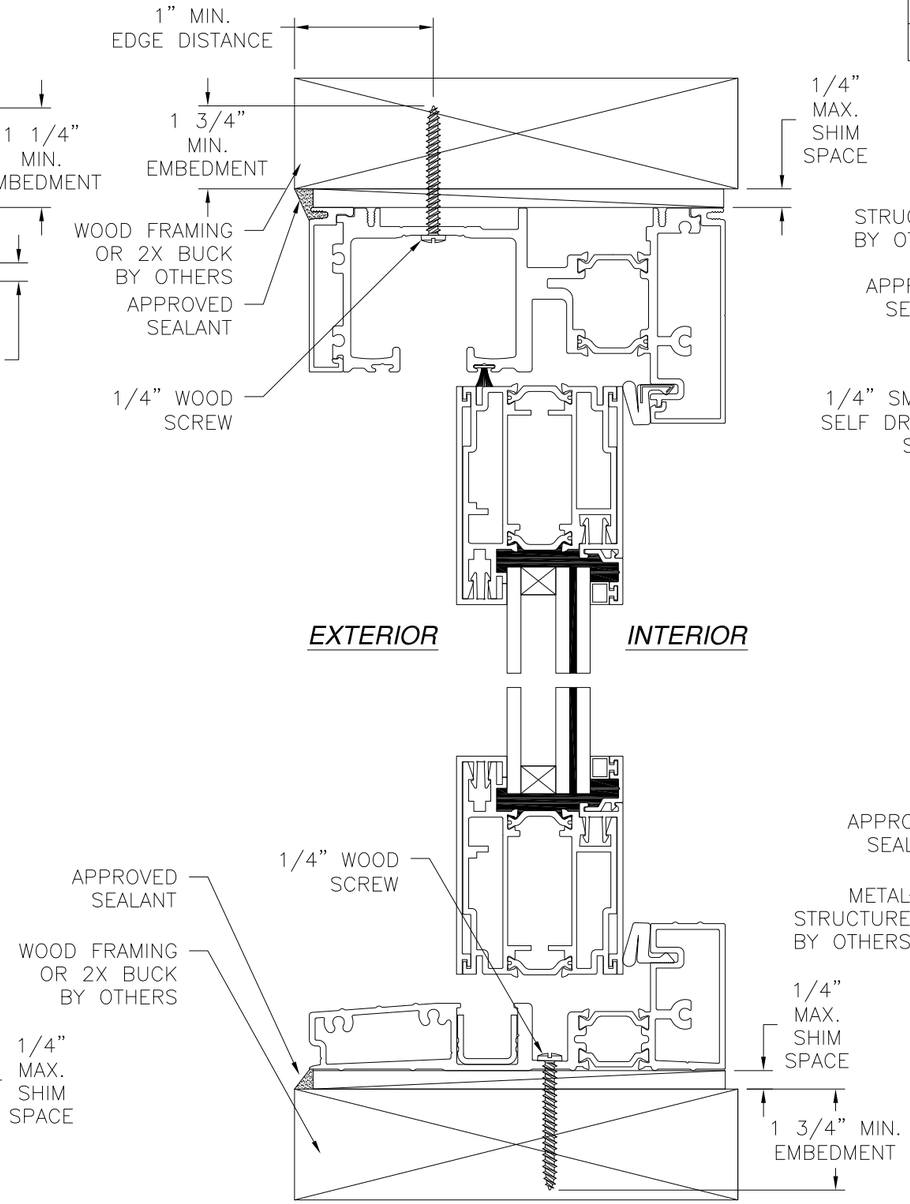

A/9 VERTICAL CROSS SECTION
WOOD FRAMING OR 2X BUCK INSTALLATION

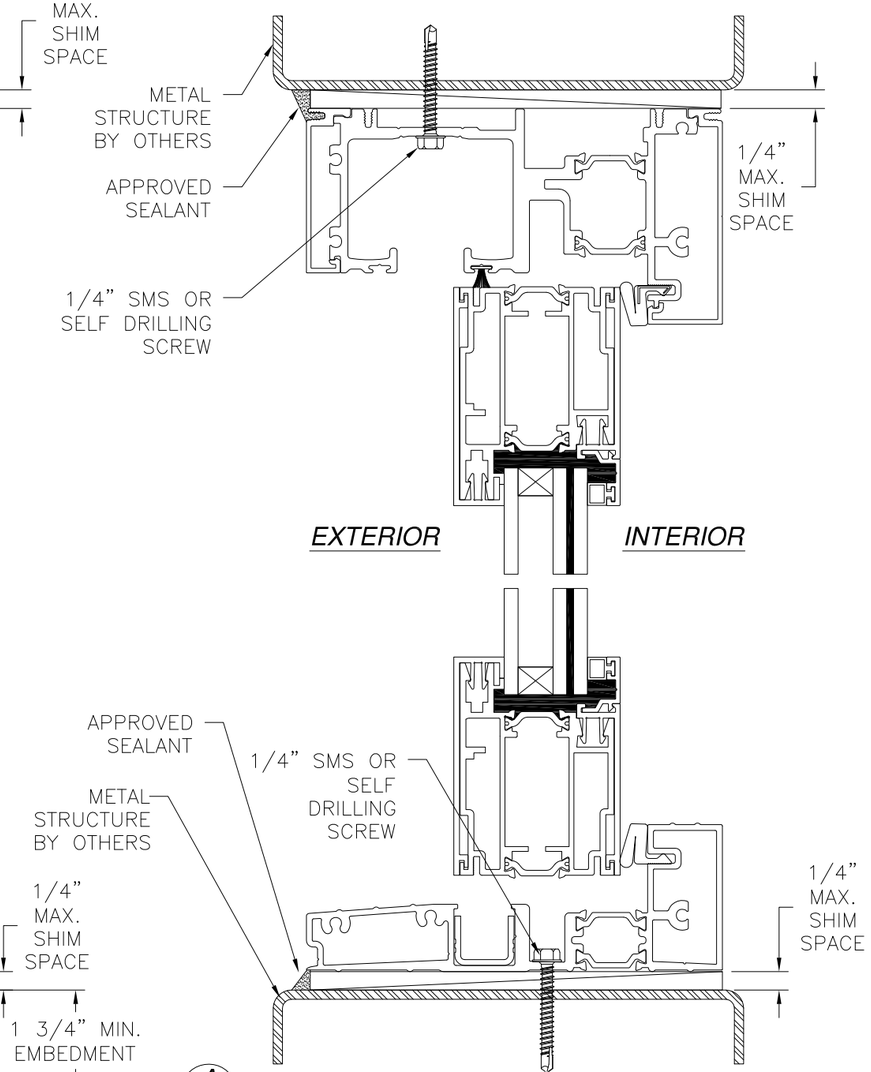

A/9 VERTICAL CROSS SECTION
METAL STRUCTURE INSTALLATION

SIGNED: 05/02/2012

NOTE:
INTERIOR AND EXTERIOR FINISHES, BY OTHERS, NOT SHOWN FOR CLARITY.

LA CANTINA DOORS
3817 OCEAN RANCH BLVD., SUITE 114
OCEANSIDE CA, 92056

OUTSWING BI-FOLD DOOR
ALUMINUM THERMALLY BROKEN HURRICANE
INSTALLATION DETAILS WITH STANDARD SILL

DRAWN: V.L.	DWG NO. 08-01610	REV –
SCALE NTS	DATE 12/12/11	SHEET 9 OF 12

Luis R. Lomas P.E.
TX No.: 101889

REVISIONS			
REV	DESCRIPTION	DATE	APPROVED

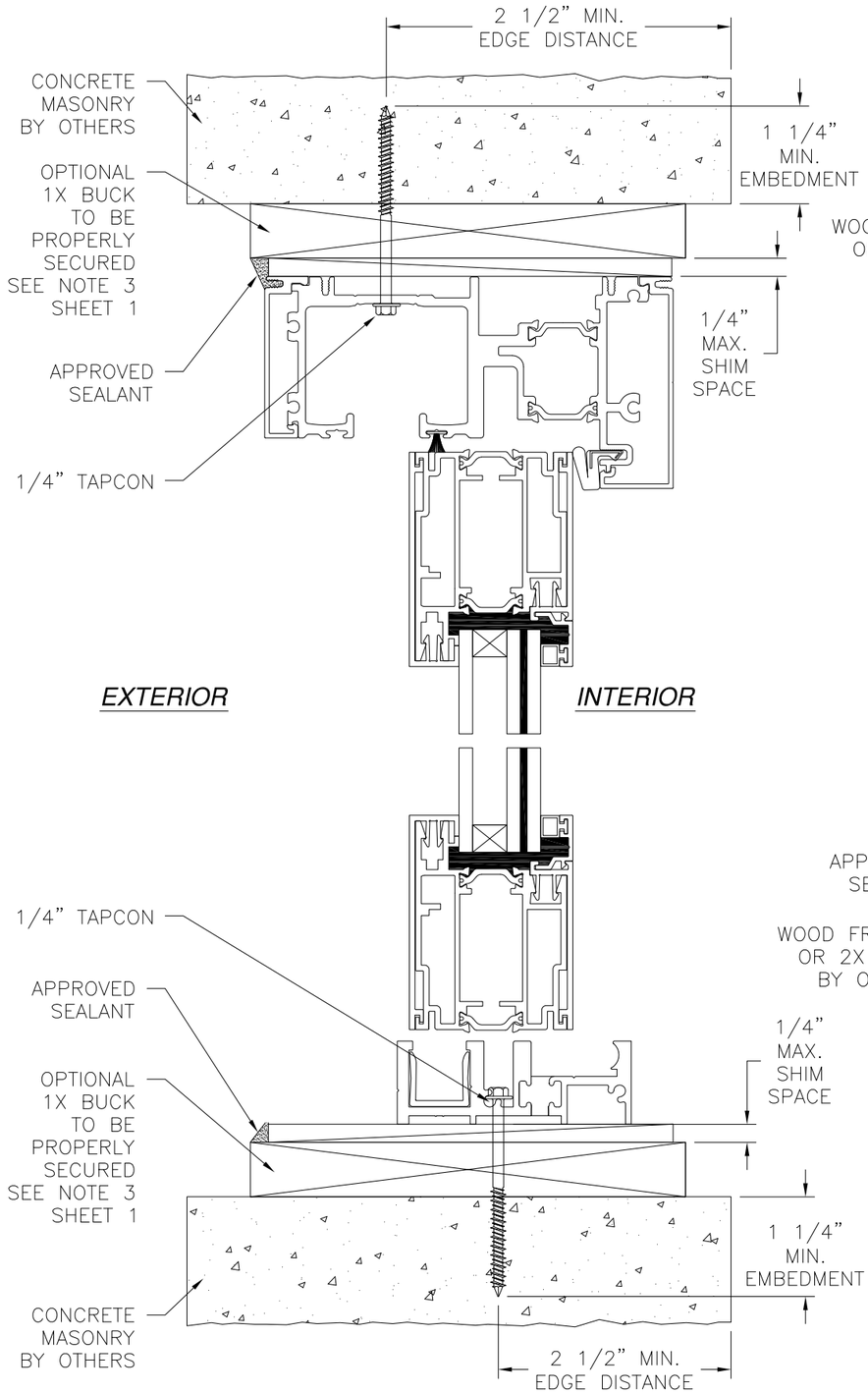

C/10 VERTICAL CROSS SECTION
CONCRETE/MASONRY INSTALLATION

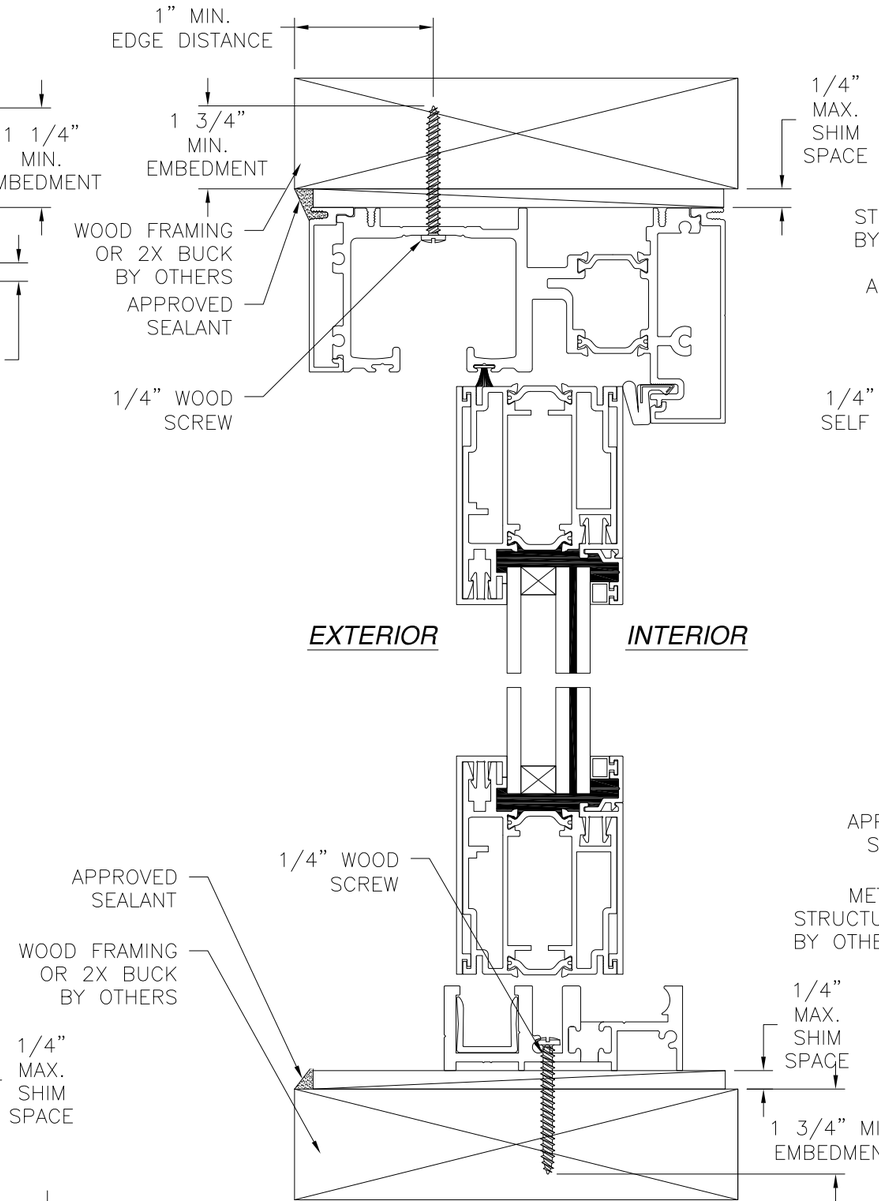

C/10 VERTICAL CROSS SECTION
WOOD FRAMING OR 2X BUCK INSTALLATION

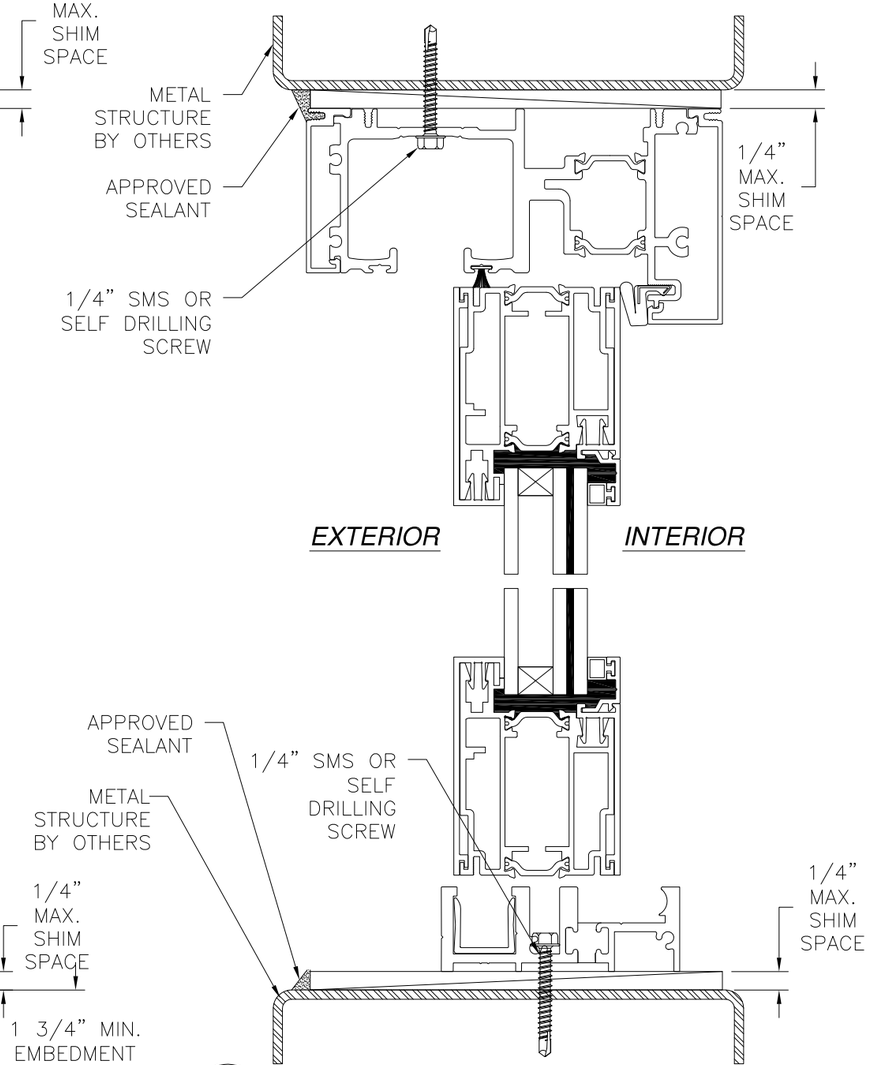

C/10 VERTICAL CROSS SECTION
METAL STRUCTURE INSTALLATION

SIGNED: 05/02/2012

NOTE:
INTERIOR AND EXTERIOR FINISHES, BY OTHERS, NOT SHOWN FOR CLARITY.

LA CANTINA DOORS
3817 OCEAN RANCH BLVD., SUITE 114
OCEANSIDE CA, 92056

OUTSWING BI-FOLD DOOR
ALUMINUM THERMALLY BROKEN HURRICANE
INSTALLATION DETAILS WITH ZERO STEP SILL

DRAWN:	DWG NO.	REV
V.L.	08-01610	–
SCALE NTS	DATE 12/12/11	SHEET 10 OF 12

Luis R. Lomas P.E.
TX No.: 101889

REVISIONS			
REV	DESCRIPTION	DATE	APPROVED

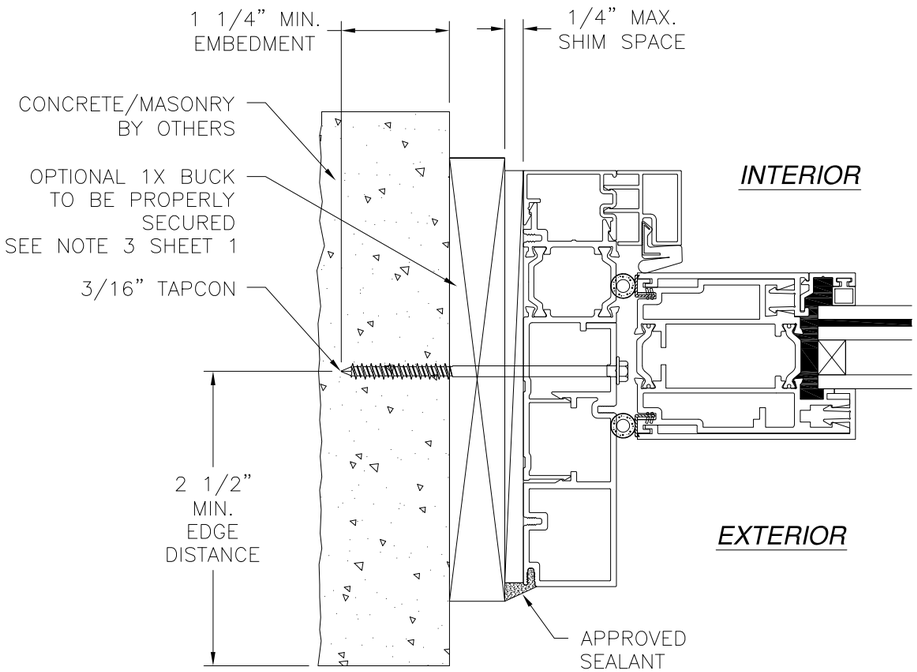

B/11 D/11 F/11 **JAMB INSTALLATION DETAIL**
CONCRETE/MASONRY INSTALLATION

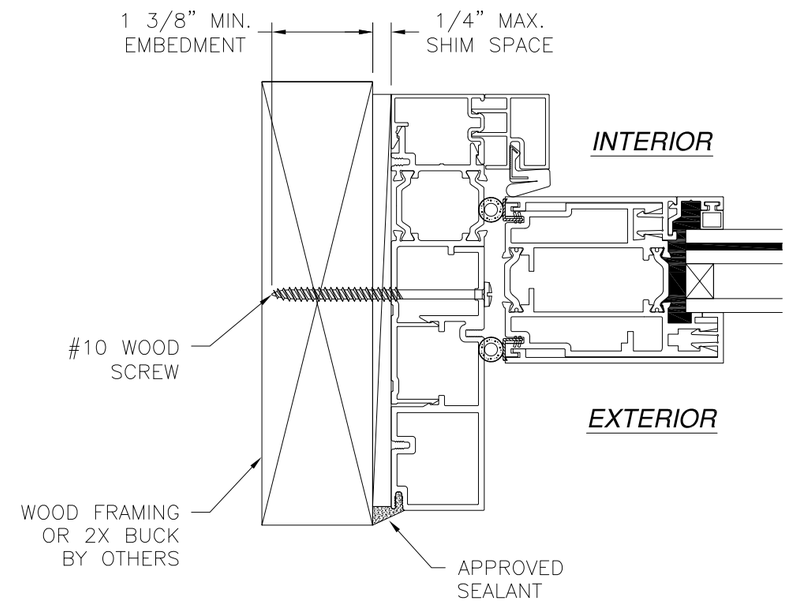

B/11 D/11 F/11 **JAMB INSTALLATION DETAIL**
WOOD FRAMING OR 2X BUCK INSTALLATION

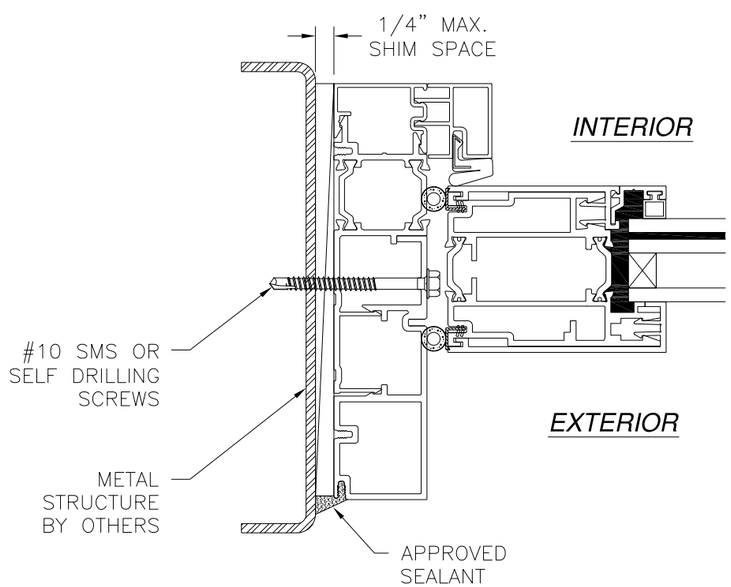

B/11 D/11 F/11 **JAMB INSTALLATION DETAIL**
METAL STRUCTURE INSTALLATION

NOTE:
INTERIOR AND EXTERIOR FINISHES, BY OTHERS, NOT SHOWN FOR CLARITY.

SIGNED: 05/02/2012

LA CANTINA DOORS
3817 OCEAN RANCH BLVD., SUITE 114
OCEANSIDE CA, 92056

OUTSWING BI-FOLD DOOR
ALUMINUM THERMALLY BROKEN HURRICANE
JAMB INSTALLATION DETAILS

DRAWN:	DWG NO.	REV
V.L.	08-01610	–

SCALE	DATE	SHEET
NTS	12/12/11	11 OF 12

Luis R. Lomas P.E.
TX No.: 101889

REVISIONS			
REV	DESCRIPTION	DATE	APPROVED

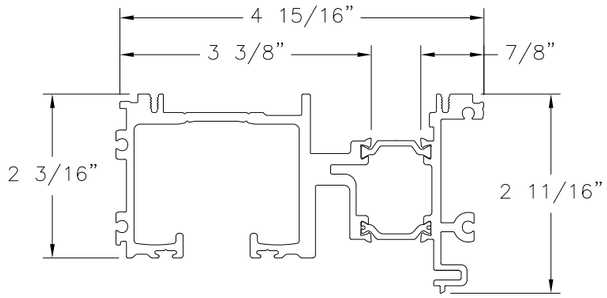

(1) HEAD CORE
ALUMINUM 6063-T5 .118" THICK

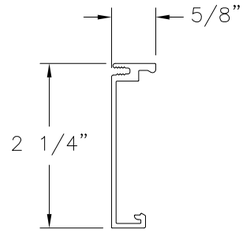

(2) EXTERIOR FASCIA
ALUMINUM 6063-T5 .062" THICK

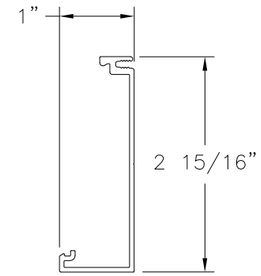

(3) INTERIOR FASCIA
ALUMINUM 6063-T5 .062" THICK

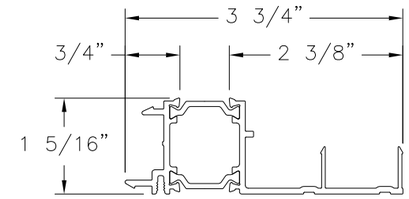

(4) JAMB CORE
ALUMINUM 6063-T5 .082" THICK

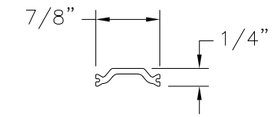

20mm STRUT
POLYMIDE 66

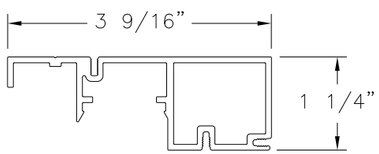

(5) JAMB EXTERIOR
ALUMINUM 6063-T5 .080" THICK

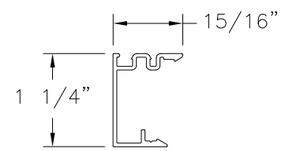

(6) JAMB INTERIOR
ALUMINUM 6063-T5 .050" THICK

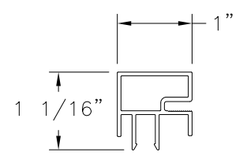

(7) JAMB STOP
ALUMINUM 6063-T5 .050" THICK

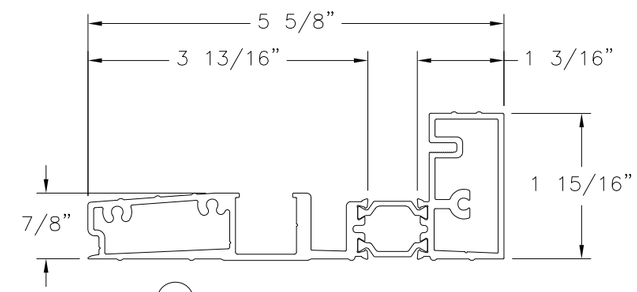

(8) SILL
ALUMINUM 6063-T5 .083" THICK

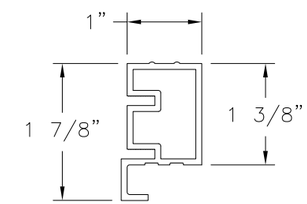

(9) SILL EXTENSION
ALUMINUM 6063-T5 .080" THICK

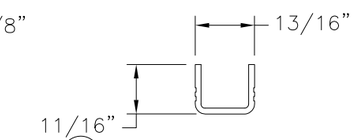

(11) U CHANNEL INSERT
ALUMINUM 6063-T5 .078" THICK

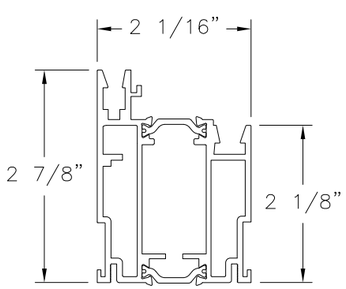

(12) STILE/RAIL CORE
ALUMINUM 6063-T5 .065" THICK

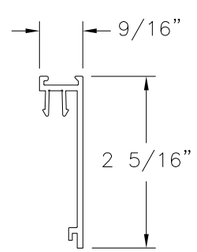

(13) STILE/RAIL SMALL FASCIA
ALUMINUM 6063-T5 .077" THICK

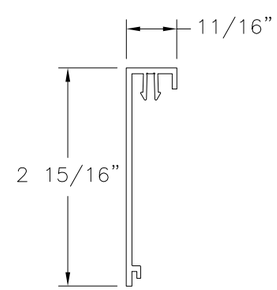

(14) STILE/RAIL LARGE FASCIA
ALUMINUM 6063-T5 .077" THICK

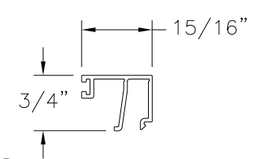

(15) GLAZING BEAD
ALUMINUM 6063-T5 .051" THICK

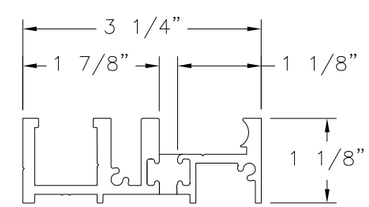

(15) GLAZING BEAD
ALUMINUM 6063-T5 .051" THICK

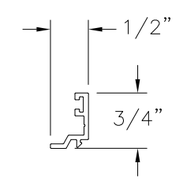

(51) GLAZING BEAD
ALUMINUM 6063-T5 .061" THICK

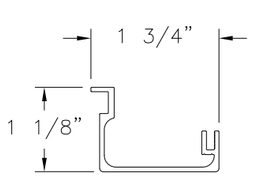

(52) ASTRAGAL
ALUMINUM 6063-T5 .063" THICK

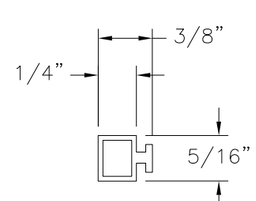

(53) GLAZING SEAL
SANTOPRENE 55 DUROMETER .032" THICK

SIGNED: 05/02/2012

LA CANTINA DOORS
3817 OCEAN RANCH BLVD., SUITE 114
OCEANSIDE CA, 92056

OUTSWING BI-FOLD DOOR
ALUMINUM THERMALLY BROKEN HURRICANE COMPONENTS

DRAWN:	DWG NO.	REV
V.L.	08-01610	A
SCALE NTS	DATE 12/12/11	SHEET 12 OF 12

Luis R. Lomas P.E.
TX No.: 101889