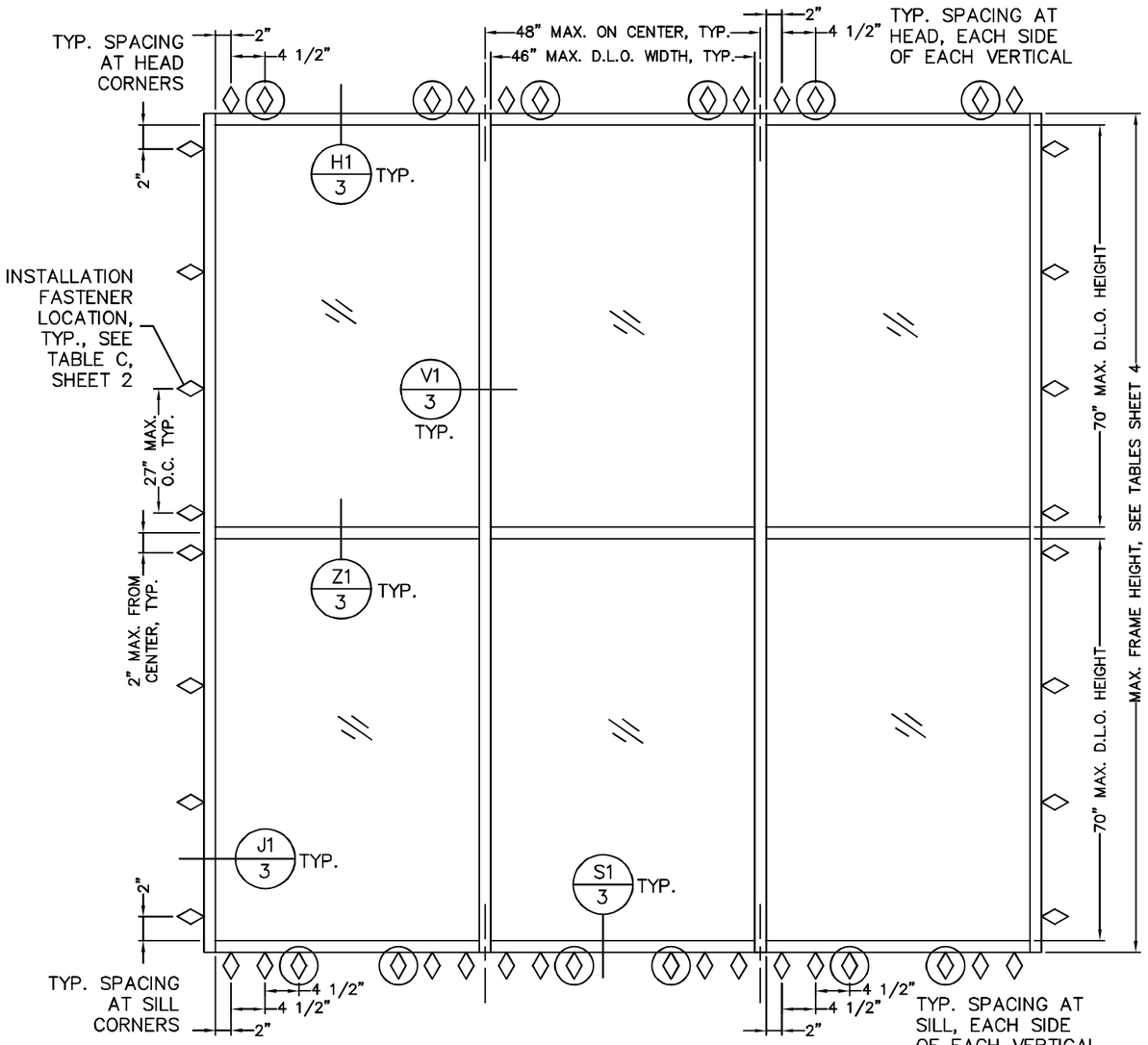

EXTERIOR ELEVATION A
WITH P1437 STEEL REINFORCEMENT

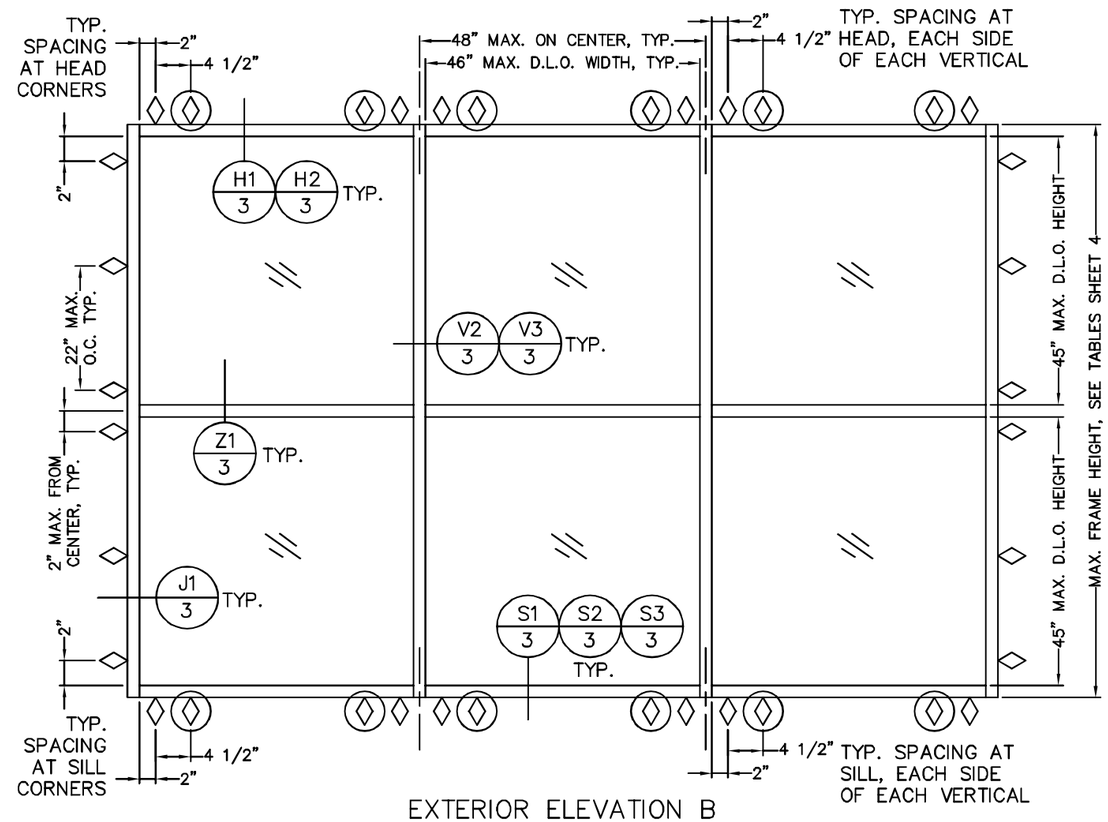

EXTERIOR ELEVATION B
NO REINFORCEMENT,
REDUCED SILL ANCHORS

NOTE: CIRCLED ANCHOR LOCATIONS (SEE ◊ SYMBOL) SHOWN IN ELEVATIONS A AND B ARE REQUIRED ONLY WHEN USING 1/4" INSTALLATION ANCHORS, SEE TABLE C, SHEET 2. NON-CIRCLED ANCHOR LOCATIONS (SEE ◊ SYMBOL) ARE REQUIRED FOR ALL FASTENER TYPES.

STATE OF TEXAS
LUCAS A. TURNER
115094
LICENSED
PROFESSIONAL ENGINEER

GENERAL NOTES:

1. THE PRODUCT SHOWN HEREIN IS DESIGNED AND MANUFACTURED TO COMPLY WITH THE REQUIREMENTS OF THE 2006 INTERNATIONAL BUILDING CODE AND 2006 INTERNATIONAL RESIDENTIAL CODE, WITH TEXAS REVISIONS EFFECTIVE JAN. 1, 2008. THIS PRODUCT HAS BEEN TESTED TO ASTM E 283, ASTM E 330, ASTM E 331, AND AAMA 501.1
2. THIS PRODUCT IS NON-IMPACT RESISTANT AND REQUIRES THE USE OF SHUTTERS IN WINDBORNE DEBRIS REGIONS.
3. THIS PRODUCT MAY BE INSTALLED IN INFINITE WIDTHS PROVIDED THE MAXIMUM VERTICAL ON-CENTER AND DLO WIDTHS ARE NOT EXCEEDED.
4. THE DESIGN PRESSURE RATINGS OF THIS PRODUCT AS DETAILED IN TABLES A AND B, SHEET 2, ARE AS LIMITED BY ASTM E-1300 02/04 GLASS TABLES, WATER PERFORMANCE, TESTED PRESSURES, AND COMPARATIVE ANALYSIS.
5. SEALING AND FLASHING STRATEGIES FOR OVERALL WATER PERFORMANCE OF INSTALLED PRODUCTS SHALL BE IN ACCORDANCE WITH MANUFACTURER'S PUBLISHED INSTRUCTIONS AND ARE THE RESPONSIBILITY OF OTHERS.
6. THE 4/3 ALLOWABLE STRESS INCREASE HAS NOT BEEN USED IN THE ANCHOR ANALYSIS FOR THIS SYSTEM. THE 1.6 Cd FACTOR WAS USED IN THE ANALYSIS OF WOOD SUBSTRATE ONLY.
7. STRUCTURAL SUITABILITY OF THE OPENING TO RECEIVE LOADS IMPARTED FROM THIS PRODUCT TO BE VERIFIED BY THE DESIGN PROFESSIONAL FOR EACH PROJECT. BUCKING, OPENINGS & BUCKING FASTENERS MUST BE PROPERLY DESIGNED & INSTALLED TO TRANSFER WIND LOADS TO THE STRUCTURE.
8. DISSIMILAR MATERIALS THAT COME INTO CONTACT, INCLUDING BUT NOT LIMITED TO FASTENERS IN PRESSURE TREATED WOOD, SHALL BE COATED OR OTHERWISE PROTECTED TO PREVENT GALVANIC REACTIONS.
9. INSTALLATIONS SHALL BE IN ACCORDANCE WITH THESE DRAWINGS UNLESS OTHERWISE APPROVED BY A LICENSED DESIGN PROFESSIONAL.
10. FOR INTERNAL JOINERY DETAILS NOT SHOWN IN THESE DRAWINGS, SEE MANUFACTURER'S PUBLISHED INSTALLATION INSTRUCTIONS.

Lucas Turner
2017-02-16
16:00+19:00

9/29/2016

LUCAS A. TURNER, P.E.
TX PE # 115094
1239 JABARA AVE.
NORTH PORT, FL 34288
PH. 941-380-1574

TUBELITE SERIES E14000 STOREFRONT SYSTEM

TUBELITE
DEPENDABLE
LEADERS IN ECO-EFFICIENT STOREFRONT, CURTAINWALL AND ENTRANCE SYSTEMS
3056 WALKER RIDGE DRIVE N.W.
WALKER, MICHIGAN 49544
PH: 800.866.2227
FX: 616.301.0008
WEB SITE: WWW.TUBELITEINC.COM

REVISION HISTORY:

REV	DATE	DRAWN	DESCRIPTION
0	7.7.16	LT	ORIGINAL RELEASE

DATE: 7.7.16
DRAWING NUMBER: TDI-E14000-NI
DRAWN:
FINAL REVIEW:
SCALE: N.T.S.
REVISION: 0
SHEET NAME: NOTES, ELEVATION
SHEET: 1 OF 5

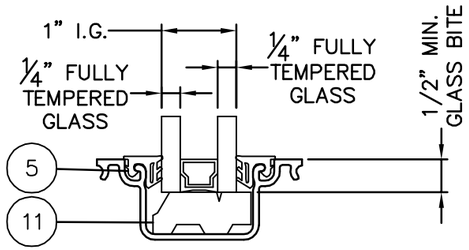

GLAZING DETAIL

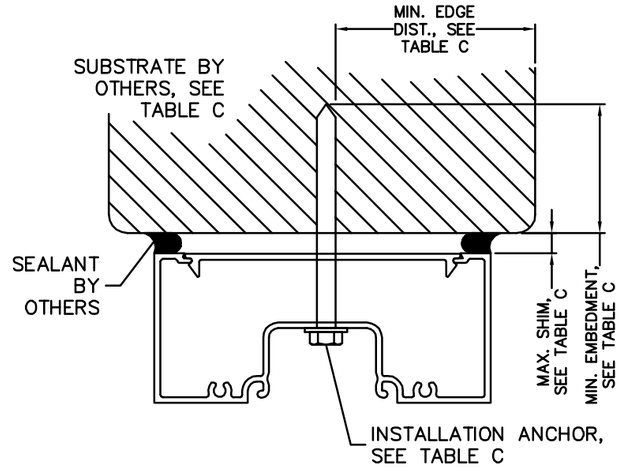

TYPICAL HEAD ANCHORAGE

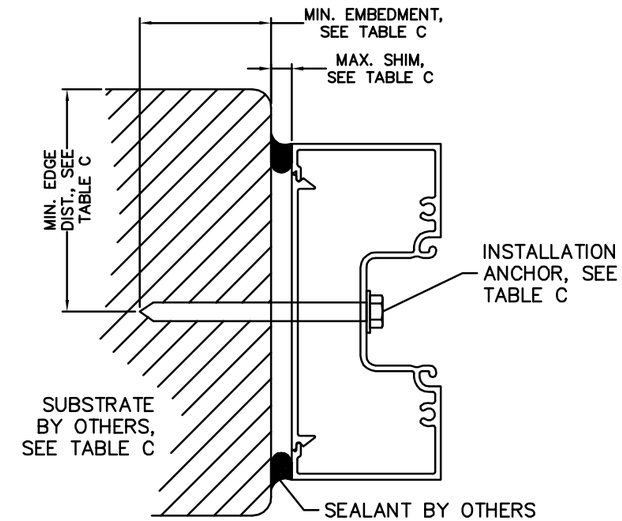

TYPICAL JAMB ANCHORAGE

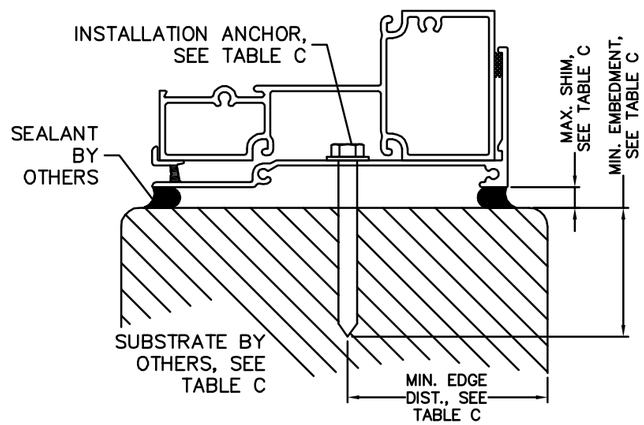

TYPICAL SILL ANCHORAGE

ANCHORAGE NOTES:
1. SHIMS SHALL BE LOAD–BEARING (PLASTIC OR METALLIC) AND CAPABLE OF TRANSFERRING APPLIED LOADS FROM THE PRODUCTS TO THE OPENING SUBSTRATES.
2. SHIM EACH ANCHOR LOCATION WHERE GAP GREATER THAN 1/16" EXISTS BETWEEN PRODUCT FRAME AND OPENING SUBSTRATE.
3. SPECIFIED EMBEDMENT TO BASE MATERIAL SHALL BE BEYOND WALL FINISH OR STUCCO.
4. MINIMUM ANCHOR SPACING SHALL BE 4 1/2"

TABLE C. QUALIFIED ANCHOR INFORMATION

ID	SUBSTRATE	ANCHOR	MIN. EMBEDMENT	MIN. EDGE DISTANCE	HEAD ANCHOR QTY PER VERT.	SILL ANCHOR QTY. PER VERT. 8' HEIGHT AND BELOW	SILL ANCHOR QTY. PER VERT. ABOVE 8' HEIGHT	MAX. SHIM GAP
A	CONCRETE OR GROUT-FILLED CMU (2850 PSI MIN)	1/4" ELCO COATED CARBON STEEL ULTRACON	1 3/4"	2 1/2"	4	4	6	1/4"
B	CONCRETE OR GROUT-FILLED CMU (2000 PSI MIN)	1/4" ITW COATED CARBON STEEL TAPCON	1 1/2"	3"	4	4	6	1/4"
C	CONCRETE (3000 PSI MIN)	1/4" ITW 410 STAINLESS TAPCON	1 3/4"	2 1/2"	4	4	6	1/4"
D	CONCRETE (3000 PSI MIN)	1/4" HILTI COATED CARBON STEEL OR STAINLESS STEEL KWIK-CON II	1"	2 1/2"	4	4	6	1/4"
E	HOLLOW OR GROUT-FILLED CMU (ASTM C-90)	1/4" HILTI COATED CARBON STEEL OR STAINLESS STEEL KWIK-CON II	1"	2 1/2"	4	4	6	1/4"
F	2x MIN. SOUTHERN PINE WOOD (G=0.55 MIN)	#14 GRADE 5 WOOD SCREW	1 3/8"	1"	4	4	6	1/4"
G	16 GAUGE (0.060") MIN. STEEL STUD 33 KSI YIELD MIN.	#1/4-28 ITW TEKS SELF-DRILLING SCREW	SEE NOTE	1/2"	4	4	6	1/4"
H	1/8" ALUM. 6063-T5 MIN. OR 1/8" STEEL 33 KSI MIN.	#14 GRADE 5 SELF-TAPPING / DRILLING SCREW	SEE NOTE	1/2"	4	4	6	1/4"
I	CONCRETE OR GROUT-FILLED CMU (3000 PSI MIN)	3/8" POWERS TAPPER CARBON STEEL	1 1/2"	4 1/2"	2	2	4	1/2"
J	CONCRETE OR GROUT-FILLED CMU (3000 PSI MIN)	3/8" ITW RED HEAD LDT CARBON OR STAINLESS STEEL	1 1/2"	3"	2	2	4	1/2"
K	CONCRETE (4000 PSI MIN)	3/8" ITW RED HEAD TRUBOLT WEDGE CARBON OR STAINLESS STEEL	1 1/2"	2 5/8"	2	2	4	1/2"
L	2x MIN. SOUTHERN PINE WOOD (G=0.55 MIN)	3/8" GRADE 5 LAG SCREW	1 3/4"	1"	2	2	4	1/2"
M	16 GAUGE (0.060") MIN. STEEL STUD 33 KSI YIELD MIN.	5/16-18 ELCO DRIL-FLEX OR HILTI KWIK-FLEX SELF-DRILLING SCREW	SEE NOTE	5/8"	2	2	4	1/2"
N	1/8" ALUM. 6063-T5 MIN. OR 1/8" STEEL 33 KSI MIN.	3/8" GRADE 5 SHEET METAL SCREW	SEE NOTE	3/4"	2	2	4	1/2"

NOTE: ANCHORS THROUGH METAL SHALL BE OF SUFFICIENT LENGTH TO PROVIDE THREAD ENGAGEMENT THROUGH THE FULL METAL THICKNESS

STATE OF TEXAS
LUCAS A. TURNER
115094
LICENSED
PROFESSIONAL ENGINEER

9/29/2016

LUCAS A. TURNER, P.E.
TX PE # 115094
1239 JABARA AVE.
NORTH PORT, FL 34288
PH. 941–380–1574

TUBELITE
SERIES E14000
STOREFRONT SYSTEM

TUBELITE
DEPENDABLE
LEADERS IN ECO-EFFICIENT STOREFRONT, CURTAINWALL AND ENTRANCE SYSTEMS
3056 WALKER RIDGE DRIVE N.W.
WALKER, MICHIGAN 49544
PH: 800.866.2227
FX: 616.301.0008
WEB SITE: WWW.TUBELITEINC.COM

REVISION HISTORY:

REV	DATE	DRAWN	DESCRIPTION
0	7.7.16	LT	ORIGINAL RELEASE

DATE: 7.7.16
DRAWING NUMBER: TDI–E14000–NI
FINAL REVIEW:
SCALE: N.T.S.
REVISION: 0
SHEET NAME: INSTALLATION DETAILS, TABLES
SHEET: 2 OF 5

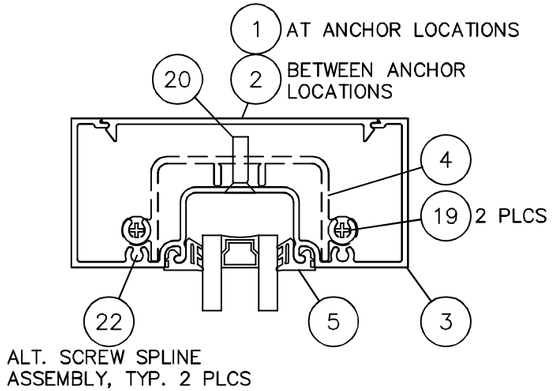

H1/3 HEAD
OPTION 1

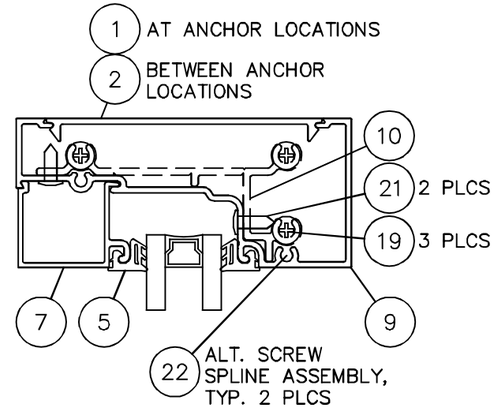

H2/3 HEAD
OPTION 2

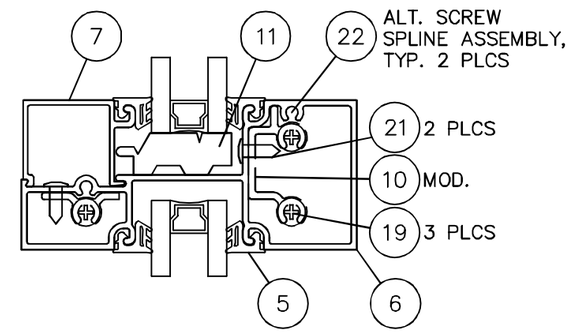

Z1/3 INTERMEDIATE HORIZONTAL

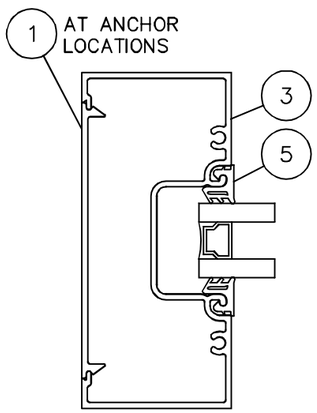

J1/3 JAMB

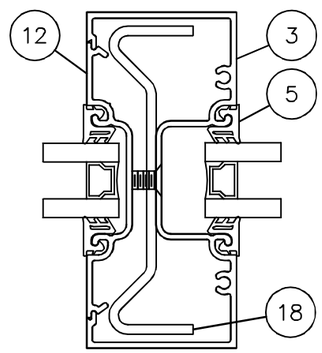

V1/3 INTERMED. VERTICAL
OPTION 1

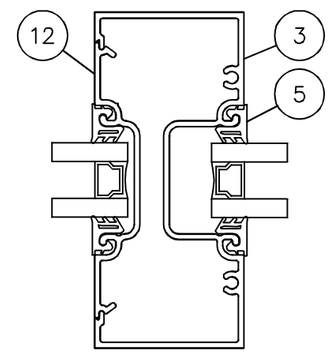

V2/3 INTERMED. VERTICAL
OPTION 2

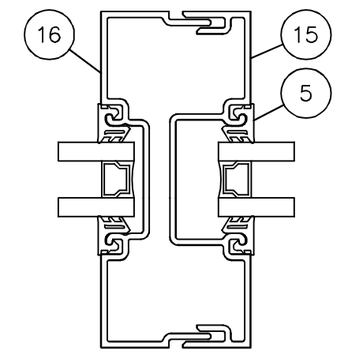

V3/3 INTERMED. VERTICAL
OPTION 3
(AVAILABLE UP TO 96" FRAME HEIGHT ONLY)

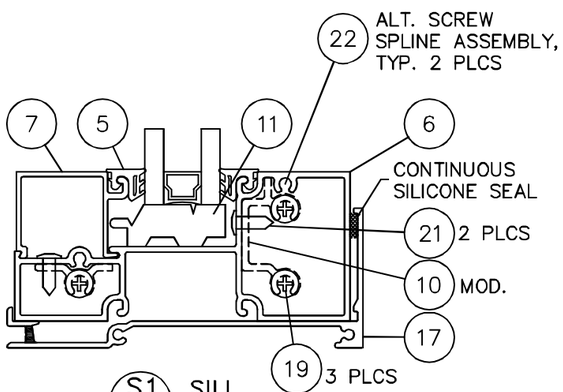

S1/3 SILL
OPTION 1

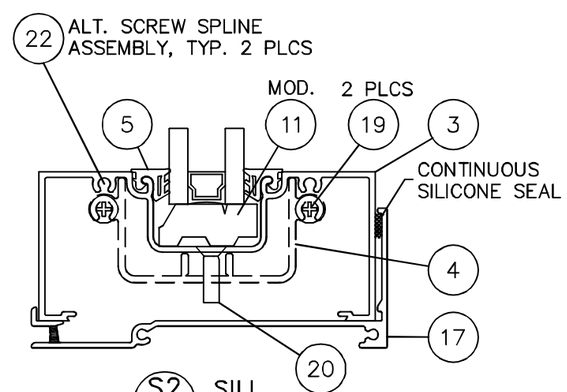

S2/3 SILL
OPTION 2

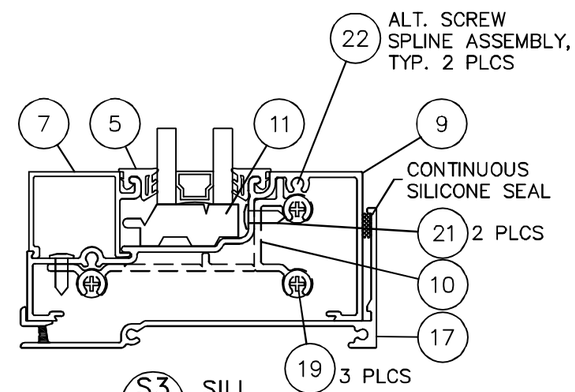

S3/3 SILL
OPTION 3

STATE OF TEXAS
LUCAS A. TURNER
115094
LICENSED
PROFESSIONAL ENGINEER

9/29/2016

LUCAS A. TURNER, P.E.
TX PE # 115094
1239 JABARA AVE.
NORTH PORT, FL 34288
PH. 941-380-1574

TUBELITE SERIES E14000 STOREFRONT SYSTEM

TUBELITE®
DEPENDABLE
LEADERS IN ECO-EFFICIENT STOREFRONT, CURTAINWALL AND ENTRANCE SYSTEMS
3056 WALKER RIDGE DRIVE N.W.
WALKER, MICHIGAN 49544
PH: 800.866.2227
FX: 616.301.0008
WEB SITE: WWW.TUBELITEINC.COM

REVISION HISTORY:

REV	DATE	DRAWN	DESCRIPTION
0	7.7.16	LT	ORIGINAL RELEASE

DATE: 7.7.16
DRAWING NUMBER: TDI-E14000-NI
FINAL REVIEW:
SCALE: N.T.S.
REVISION: 0
SHEET NAME: SECTION DETAILS
SHEET: 3 OF 5

ALLOWABLE DESIGN PRESSURES (PSF)
FOR ELEVATION A, SHEET 1,
REINFORCED WITH P1437 STEEL

MAXIMUM MULLION HEIGHT (IN.)	MAXIMUM LOAD WIDTH (IN.)	ALLOWABLE DESIGN PRESSURES (+ / - PSF)
144	27	30.0
	30	30.0
	33	30.0
	36	30.0
	39	30.0
	42	30.0
	45	30.0
	48	30.0
150	27	30.0
	30	30.0
	33	30.0
	36	30.0
	39	30.0
	42	30.0
	45	30.0
	48	29.8
156	27	30.0
	30	30.0
	33	30.0
	36	30.0
	39	30.0
	42	30.0
	45	28.9
	48	27.1
162	27	30.0
	30	30.0
	33	30.0
	36	30.0
	39	29.8
	42	27.7
	45	25.8
	48	24.2

MAXIMUM MULLION HEIGHT (IN.)	MAXIMUM LOAD WIDTH (IN.)	ALLOWABLE DESIGN PRESSURES (+ / - PSF)
168	27	30.0
	30	30.0
	33	30.0
	36	28.9
	39	26.7
	42	24.8
	45	23.1
	48	21.7
174	27	30.0
	30	30.0
	33	28.4
	36	26.0
	39	24.0
	42	22.3
	45	20.8
	48	19.5
180	27	30.0
	30	28.2
	33	25.7
	36	23.5
	39	21.7
	42	20.2
	45	18.8
	48	17.6

ALLOWABLE DESIGN PRESSURES (PSF)
FOR ELEVATION B, SHEET 1,
NON-REINFORCED

MAXIMUM UNIT HEIGHT (IN.)	MAXIMUM LOAD WIDTH (IN.)	ALLOWABLE DESIGN PRESSURES (+ / - PSF)
96	27	30.0
	30	30.0
	33	30.0
	36	30.0
	39	30.0
	42	30.0
	45	30.0
	48	30.0
114	27	30.0
	30	30.0
	33	30.0
	36	30.0
	39	30.0
	42	28.3
	45	26.4
	48	24.7
120	27	30.0
	30	30.0
	33	30.0
	36	29.7
	39	27.5
	42	25.5
	45	23.8
	48	22.3
126	27	30.0
	30	30.0
	33	28.8
	36	26.4
	39	24.3
	42	22.6
	45	21.1
	48	19.8

MAXIMUM UNIT HEIGHT (IN.)	MAXIMUM LOAD WIDTH (IN.)	ALLOWABLE DESIGN PRESSURES (+ / - PSF)
132	27	30.0
	30	27.5
	33	25.0
	36	22.9
	39	21.2
	42	19.7
	45	18.3
	48	17.2

NOTE:
THE EXPANSION JOINT DETAIL V3/3 IS ONLY AVAILABLE UP TO 96" MAX. FRAME HEIGHT

STATE OF TEXAS
LUCAS A. TURNER
115094
LICENSED
PROFESSIONAL ENGINEER

9/29/2016

LUCAS A. TURNER, P.E.
TX PE # 115094
1239 JABARA AVE.
NORTH PORT, FL 34288
PH. 941-380-1574

TUBELITE
SERIES E14000
STOREFRONT SYSTEM

TUBELITE
DEPENDABLE
LEADERS IN ECO-EFFICIENT STOREFRONT, CURTAINWALL AND ENTRANCE SYSTEMS
3056 WALKER RIDGE DRIVE N.W.
WALKER, MICHIGAN 49544
PH: 800.866.2227
FX: 616.301.0008
WEB SITE: WWW.TUBELITEINC.COM

REVISION HISTORY:

REV	DATE	DRAWN	DESCRIPTION
0	7.7.16	LT	ORIGINAL RELEASE

DATE: 7.7.16
DRAWING NUMBER: TDI-E14000-NI
FINAL REVIEW:
SCALE: N.T.S.
REVISION: 0
SHEET NAME: DESIGN PRESSURE TABLES
SHEET: 4 OF 5

PARTS LIST			
ITEM	PART NUMBER	DESCRIPTION	MATERIAL
1	P1745	EXTRUSION ~ FLAT CLOSURE	ALUMINUM–6063–T5
2	P4543	EXTRUSION ~ FLAT CLOSURE	ALUMINUM–6063–T5
3	E14141	EXTRUSION ~ HEAD/JAMB/VERT./SILL	ALUMINUM–6063–T5
4	P1133	EXTRUSION ~ SHEAR BLOCK	ALUMINUM–6063–T5
5	P2728	GLAZING GASKET	P–PART RUBBER
6	E14103	EXTRUSION ~ HEAD/HORIZ./SILL	ALUMINUM–6063–T5
7	E14104	EXTRUSION ~ GLAZING BEAD	ALUMINUM–6063–T5
9	E14140	EXTRUSION ~ HEAD/SILL	ALUMINUM–6063–T5
10	P1134	EXTRUSION ~ SHEAR BLOCK	ALUMINUM–6063–T5
11	P1132	SETTING BLOCK	P–PART RUBBER
12	E14445	EXTRUSION ~ POCKET FILLER	ALUMINUM–6063–T5
15	E14106	EXTRUSION ~ FEMALE EXPANSION VERTICAL	ALUMINUM–6063–T5
16	E14107	EXTRUSION ~ MALE EXPANSION VERTICAL	ALUMINUM–6063–T5
17	E14059	EXTRUSION ~ SILL FLASHING	ALUMINUM–6063–T5
18	P1437	STEEL REINFORCEMENT	1008CQ HOT ROLLED
19	S009	SCREW ~ #10 X 1–3/4" PAN HD PHIL	P–PART–FASTENER
20	S149	SCREW ~ #12 X 3/4" FLAT HD PHIL	P–PART–FASTENER
21	S191	SCREW ~ #10 X 1/2" TRUSS HD PHIL	P–PART–FASTENER
22	S202	SCREW ~ #10–24 X 1" SELF–TAPPING HEX HD PHIL	P–PART–FASTENER

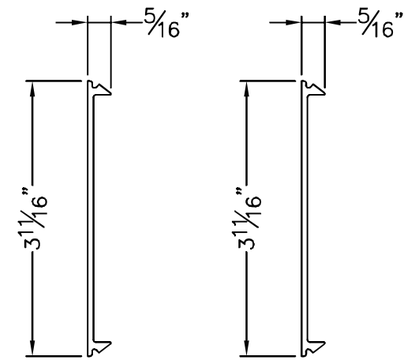

ITEM 1 – P1745
FLAT CLOSURE

ITEM 2 – P4543
FLAT CLOSURE

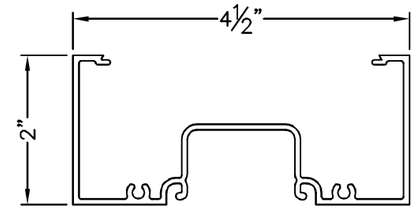

ITEM 3 – E14141
HEAD/JAMB/VERT./SILL

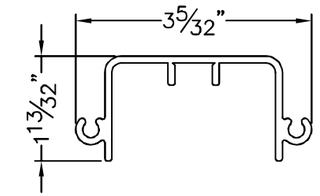

ITEM 4 – P1133
SHEAR BLOCK

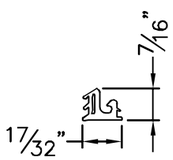

ITEM 5
P2728
GLAZING
GASKET

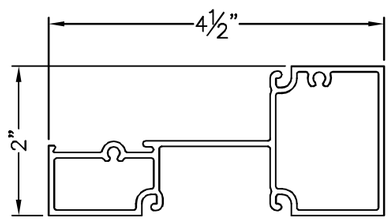

ITEM 6 – E14103
HEAD/HORIZ./SILL

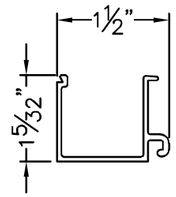

ITEM 7 – E14104
GLAZING BEAD

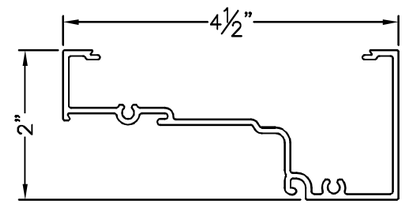

ITEM 9 – E14140
HEAD/SILL

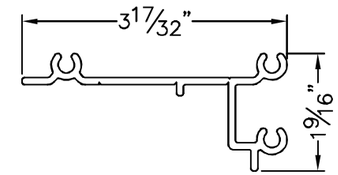

ITEM 10 – P1134
SHEAR BLOCK

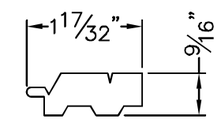

ITEM 11 – P1132
SETTING BLOCK

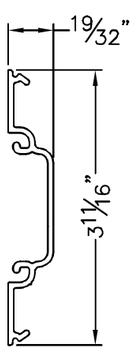

ITEM 12 – E14445
POCKET FILLER

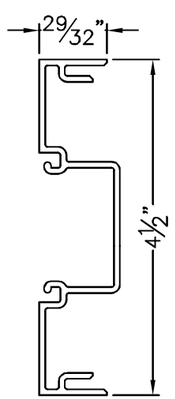

ITEM 15 – E14106
FEM. EXP. VERT.

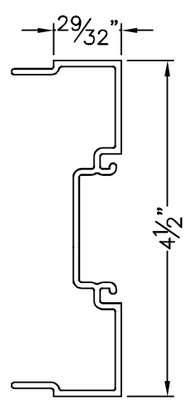

ITEM 16 – E14107
MALE EXP. VERT.

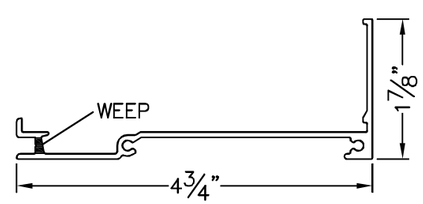

ITEM 17 – E14059
SILL FLASHING

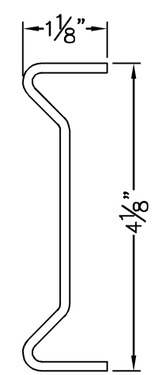

ITEM 18 – P1437
STEEL REINFORCEMENT

STATE OF TEXAS
LUCAS A. TURNER
115094
LICENSED
PROFESSIONAL ENGINEER

9/29/2016

LUCAS A. TURNER, P.E.
TX PE # 115094
1239 JABARA AVE.
NORTH PORT, FL 34288
PH. 941–380–1574

TUBELITE
SERIES E14000
STOREFRONT SYSTEM

TUBELITE®
DEPENDABLE
LEADERS IN ECO-EFFICIENT STOREFRONT, CURTAINWALL AND ENTRANCE SYSTEMS
3056 WALKER RIDGE DRIVE N.W.
WALKER, MICHIGAN 49544
PH: 800.866.2227
FX: 616.301.0008
WEB SITE: WWW.TUBELITEINC.COM

REVISION HISTORY:

REV	DATE	DRAWN	DESCRIPTION
0	7.7.16	LT	ORIGINAL RELEASE

DATE: 7.7.16
DRAWING NUMBER: TDI–E14000–NI
FINAL REVIEW:
SCALE: N.T.S.
REVISION: 0
SHEET NAME: BILL OF MAT., PART DRAWINGS
SHEET: 5 OF 5