Alside BECAUSE LIFE IS FOR LIVING®

3773 STATE ROAD, CUYAHOGA FALLS, OH 44223

# MODEL "i" 201 EXTRUDED VINYL DOUBLE HUNG WINDOW

## "NON-IMPACT"

ALSO DISTRIBUTED UNDER THE FOLLOWING TRADE NAMES:

***ASSOCIATED MATERIALS, INC.***
***GENTEK BUILDING PRODUCTS***
***REVERE BUILDING PRODUCTS***

EVALUATED FOR USE IN THE STATE OF TEXAS

The Alside Double Hung Window described herein complies with the 2006 International Residential Code (IRC), Sections R301 & R613 and the 2006 International Building Code (IBC), Sections 1405.12, 1609, 1714.5, 2403 and 2404 (including Texas revisions) subject to the following conditions:

1. Anchors shall be as listed and spaced as shown in the details. Anchor embedment to base material shall be beyond wall dressing or stucco.
2. When used in areas requiring wind-borne debris protection this product is required to be protected with an impact resistant covering that complies with Section R301.2.1.2 of the IRC and Section 1609.1.2 of the IBC.
3. Allowable design pressure requirements must be equal to or less than the design pressure rating shown in the design pressure chart, sheet 1 of this drawing.
4. Conditions not covered by this drawing are subject to further engineering analysis.

**TABLE OF CONTENTS**


| SHEET# | DESCRIPTION |
|---|---|
| 1 | Typical elevations, design pressures & general notes |
| 2 | Vertical & horizontal cross sections & frame anchoring |
| 3 | Bill of materials, glazing detail and components |


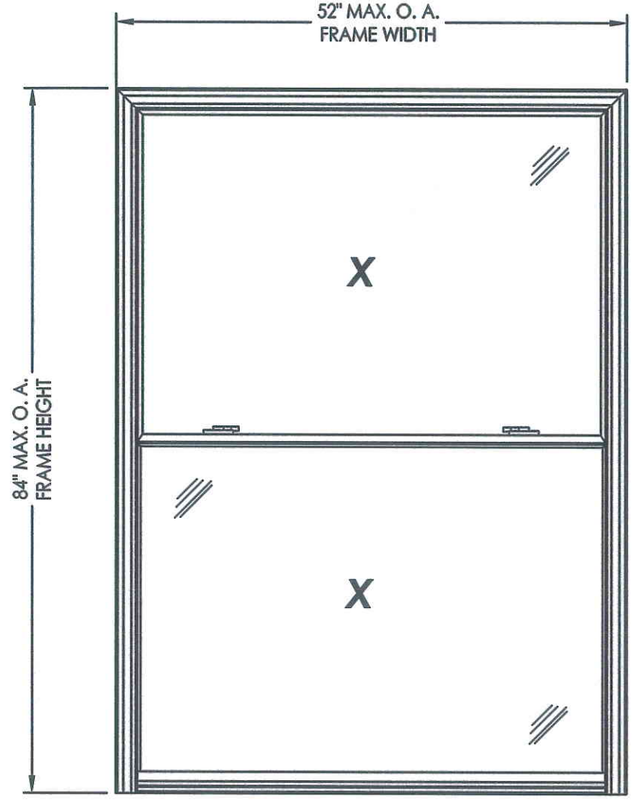


| OVERALL FRAME DIMENSION | OVERALL D.L.O. (TOP) | OVERALL D.L.O. (BOTTOM) | GLASS TYPE | DESIGN PRESSURE (PSF) | |
|---|---|---|---|---|---|
| | | | | POSITIVE | NEGATIVE |
| 48.0" x 84.0" | 42.0" x 37.7" | 43.0" x 38.7" | G1 | +50.0 | -50.0 |
| 52.0" x 72.0" | 46.0" x 31.7" | 47.0" x 32.7" | G1 | +45.0 | -45.0 |

NOTE: MAX. FRAME HEIGHT AND WIDTH OCCUR ON SEPARATE UNITS

STATE OF TEXAS
LYNDON F. SCHMIDT
104123
LICENSED
PROFESSIONAL ENGINEER


Documents Prepared By: Lyndon F. Schmidt, P.E.
TEXAS P.E. #104123

RW BUILDING CONSULTANTS, INC.
P.O. Box 230 Valrico FL. 33595
Phone No.: 813.659.9197

TEXAS BOARD OF PROFESSIONAL ENGINEERS
CERTIFICATE OF REGISTRATION # F-11852


PRODUCT: DOUBLE HUNG WINDOW

PART OR ASSEMBLY: TYPICAL ELEVATION, DESIGN PRESSURES & GENERAL NOTES

| NO. | DATE | BY |
|---|---|---|
| | | |

REVISIONS

DATE: 6/15/11
SCALE: N.T.S.
DWG. BY: JK/LS
CHK. BY: LFS
DRAWING NO.: TX-4128
SHEET 1 OF 3


© 2011 R.W. BUILDING CONSULTANTS INC.


R:\A - Projects\Project Folders\Proj 1601 - 1700\PF 1604\D. RWBC Drawings\Texas 2011\TX-4128.DWG, TX-4128

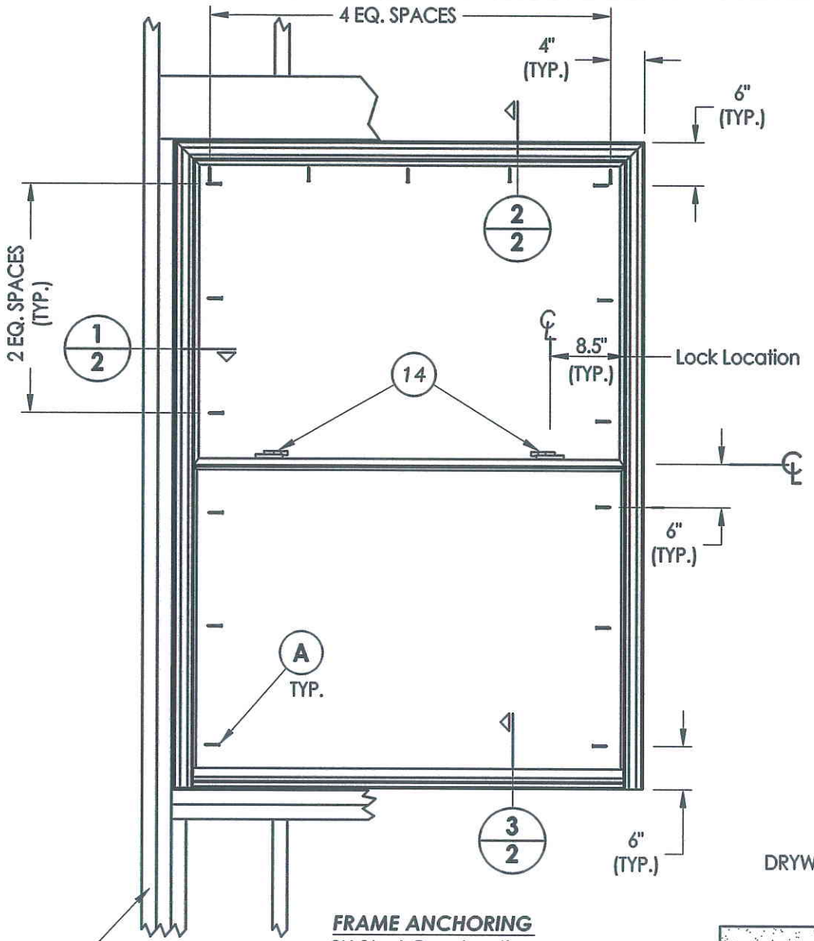


**FRAME ANCHORING**
2X Stud Construction

2x framing to be designed by the engineer or architect of record based on wind loads and the cladding being used.

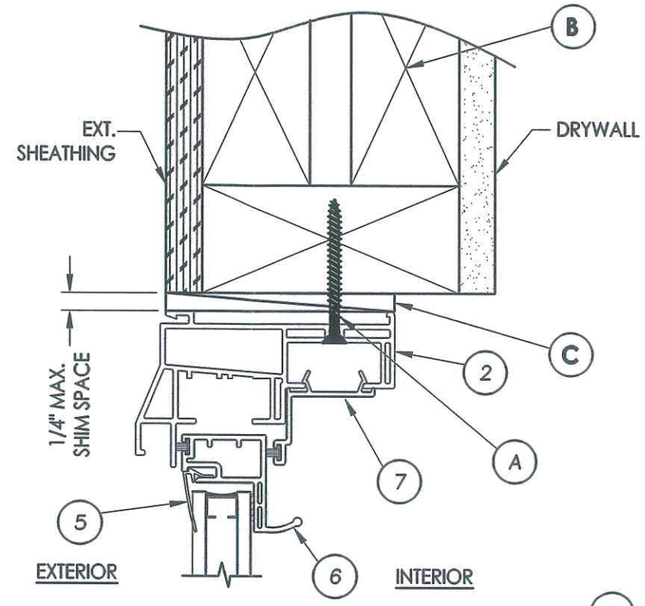


**2/2 VERTICAL CROSS SECTION**

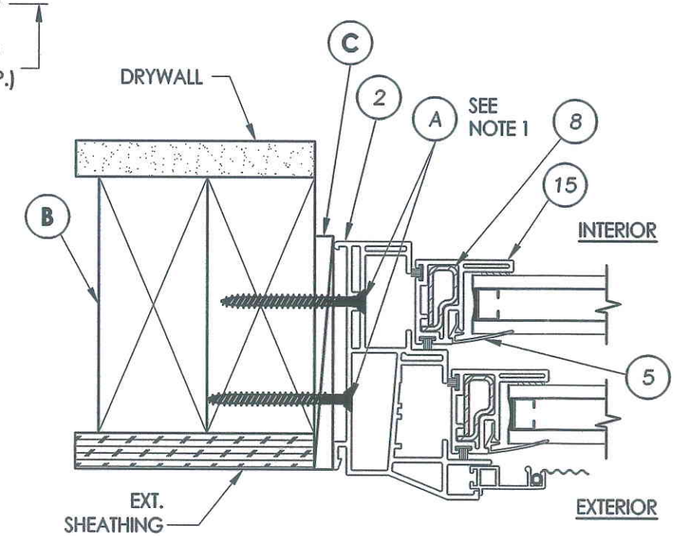


**1/2 HORIZONTAL CROSS SECTION**

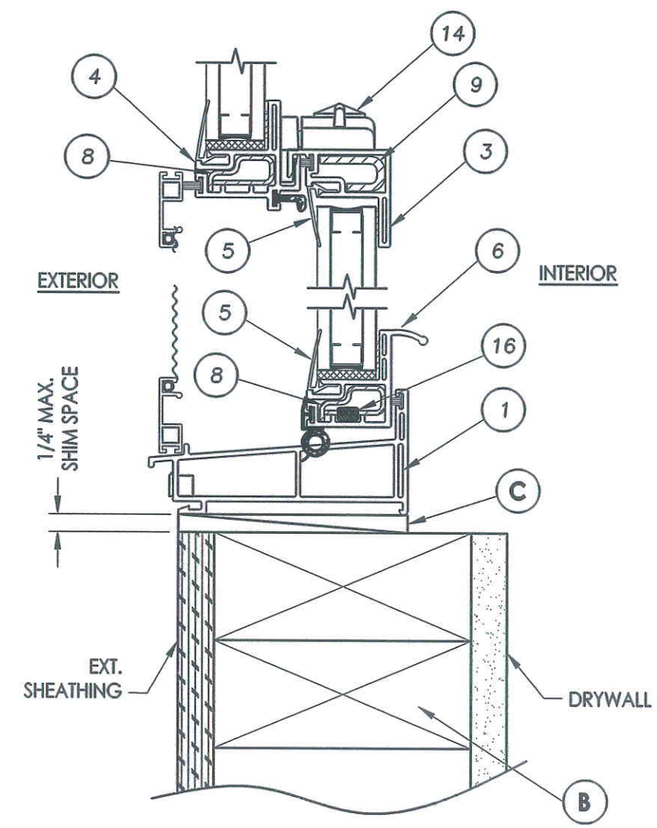


**3/2 VERTICAL CROSS SECTION**

NOTE:

1. Anchors located above the meeting rail are in the interior track and anchors located below the meeting rail are in the exterior track.

STATE OF TEXAS
LYNDON F. SCHMIDT
104123
LICENSED PROFESSIONAL ENGINEER


Documents Prepared By: Lyndon F. Schmidt, P.E.
TEXAS P.E. #104123

RW BUILDING CONSULTANTS, INC.
P.O. Box 230 Valrico FL. 33595
Phone No.: 813.659.9197

TEXAS BOARD OF PROFESSIONAL ENGINEERS
CERTIFICATE OF REGISTRATION # F-11852


PRODUCT: DOUBLE HUNG WINDOW

PART OR ASSEMBLY: VERTICAL & HORIZONTAL CROSS SECTIONS & FRAME ANCHORING

| NO. | DATE | REVISIONS | BY |
|---|---|---|---|

DATE: 6/15/11
SCALE: N.T.S.
DWG. BY: JK/LS
CHK. BY: LFS
DRAWING NO.: TX-4128
SHEET 2 OF 3

© 2011 R.W. BUILDING CONSULTANTS INC.

R:\A - Projects\Project Folders\Proj 1601 - 1700\PF-1604\D. RWBC Drawings\Texas 2011\TX-4128.DWG, 2.1

## BILL OF MATERIALS

| ITEM | DESCRIPTION | |
|---|---|---|
| A | #10 x 2" PFH WS | STEEL |
| B | 2X FRAMING (G >= 0.42) | WOOD |
| C | 1/4" MAX SHIM SPACE | WOOD |
| 1 | EXTRUDED VINYL SILL * | RIGID PVC |
| 2 | EXTRUDED VINYL HEAD & JAMB* | RIGID PVC |
| 3 | EXTRUDED VINYL LOCK RAIL * | RIGID PVC |
| 4 | EXTRUDED VINYL KEEPER RAIL * | RIGID PVC |
| 5 | EXTRUDED VINYL GLAZING BEAD * | PVC |
| 6 | EXTRUDED VINYL HANDLE RAIL * | RIGID PVC |
| 7 | EXTRUDED VINYL SASH STOP * | RIGID PVC |
| 8 | SASH STILE AND RAIL REINFORCEMENT | STEEL |
| 9 | LOCK RAIL REINFORCEMENT | STEEL |
| 11 | GLAZING TAPE (1/16" X 3/8") | - |
| 12 | STEEL INTERCEPT SPACER | STEEL |
| 13 | GLAZING SHIM 1/8" THICK | BUTYL |
| 14 | METAL BUTTON CAM LOCK (ASHLAND) | - |
| 15 | SASH STILE | STEEL |
| 16 | PIVOTTRUE PIVOT BAR | - |

* THE APPROVED WHITE RIGID PVC EXTERIOR EXTRUSIONS FOR WINDOWS ARE TO BE PRODUCED BY EXTRUDERS LICENSEES IN "AAMA CERTIFICATION PROGRAMS FOR RIGID PVC EXTRUSIONS".

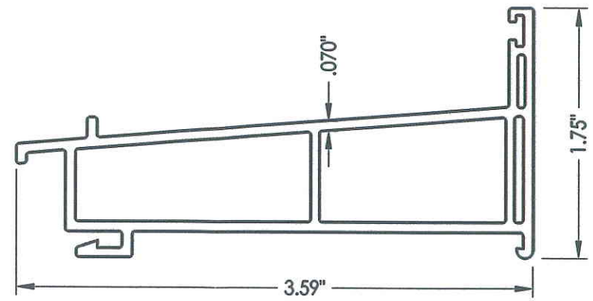


1 SILL

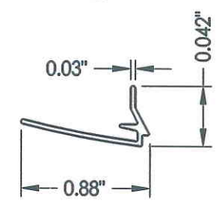


5 GLAZING BEAD

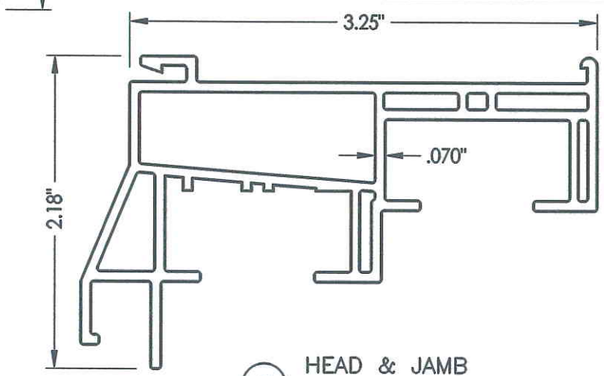


2 HEAD & JAMB

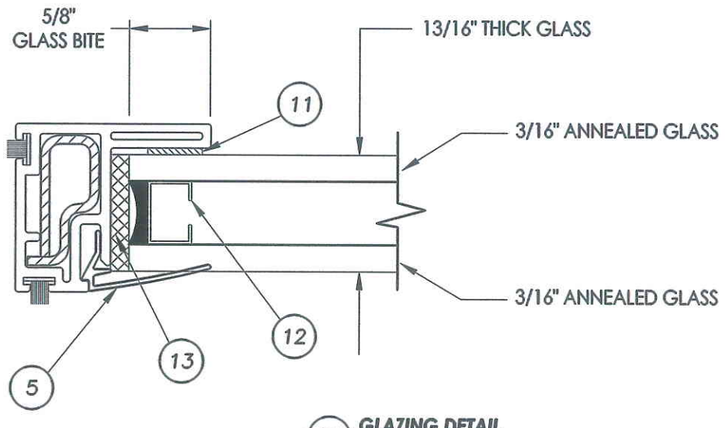


G1 GLAZING DETAIL

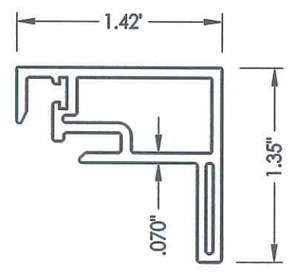


3 LOCK RAIL

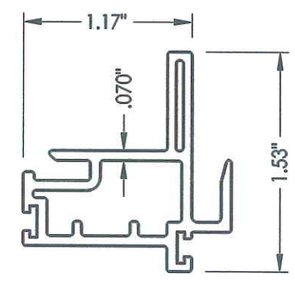


4 KEEPER RAIL

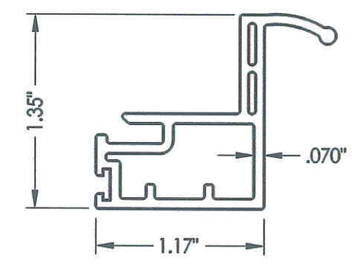


6 HANDLE RAIL

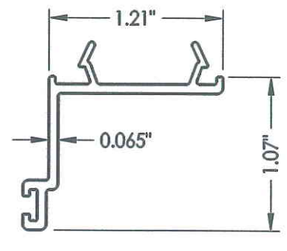


7 SASH STOP

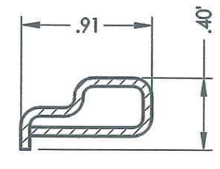


8 SASH STILE & RAIL REINFORCEMENT

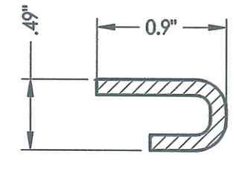


9 LOCK RAIL REINFORCEMENT

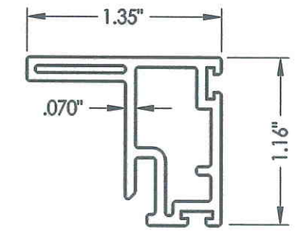


15 SASH STILE

STATE OF TEXAS
LYNDON F. SCHMIDT
104123
LICENSED PROFESSIONAL ENGINEER

6-16-11


Documents Prepared By: Lyndon F. Schmidt, P.E.
TEXAS P.E. #104123

RW BUILDING CONSULTANTS, INC.
P.O. Box 230 Valrico FL 33595
Phone No.: 813.659.9197

TEXAS BOARD OF PROFESSIONAL ENGINEERS
CERTIFICATE OF REGISTRATION # F-11852


PRODUCT: DOUBLE HUNG WINDOW

PART OR ASSEMBLY: BILL OF MATERIALS, GLAZING DETAIL & COMPONENTS

| NO. | DATE | BY |
|---|---|---|
| | | |

REVISIONS

DATE: 6/15/11
SCALE: N.T.S.
DWG. BY: JK/LS
CHK. BY: LFS
DRAWING NO.: TX-4128
SHEET 3 OF 3

© 2011 R.W. BUILDING CONSULTANTS INC.

R:\A - Projects\Project Folders\Proj 1601 - 1700\PF 1604\D_RWBC Drawings\Texas 2011\TX-4128.DWG, 3.1