MODEL 615 SYSTEM 3
PICTURE WINDOW - NON-IMPACT

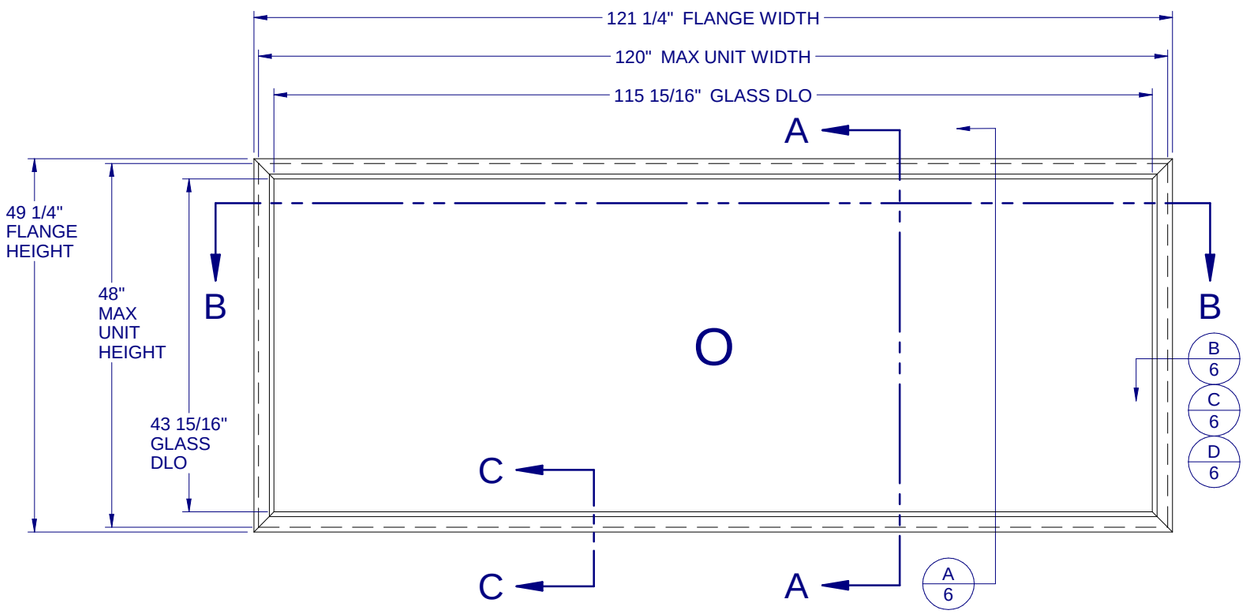

(CAR 138-1353)
MAXIMUM ALLOWABLE DESIGN PRESSURE: +50/-50 PSF

GENERAL NOTES:

1. THE PRODUCT SHOWN HEREIN IS DESIGNED AND MANUFACTURED TO COMPLY WITH THE REQUIREMENTS OF THE 2018 INTERNATIONAL BUILDING CODE AND 2018 INTERNATIONAL RESIDENTIAL CODE.
2. GLAZING OPTION: (SEE SHEET 3)
3. CONFIGURATIONS: "O". ARCHITECTURAL SHAPES INCLUDE, BUT ARE NOT LIMITED TO, THOSE SHOWN ON SHEET 2.
4. ANCHORAGE: THE 33 1/3% STRESS INCREASE HAS NOT BEEN USED IN THE DESIGN OF THIS PRODUCT. SEE SHEET 6 FOR ANCHOR DETAILS. WINDLOAD DURATION FACTOR Cd=1.6 WAS USED FOR WOOD ANCHOR CALCULATIONS.
5. NOT APPROVED FOR IMPACT RESISTANCE. IMPACT PROTECTIVE SYSTEM IS REQUIRED IN WIND BORNE DEBRIS REGION.
6. ALL FRAMES FULLY WELDED.
7. SERIES / MODEL DESIGNATION PW-615.
8. THE DESIGNATION X AND O STAND FOR THE FOLLOWING:
   O = FIXED SASH
9. SECTION CALLOUTS APPLY TO ALL ELEVATIONS IN A SIMILAR LOCATION.

Lucas Turner
2021.09.02
12:21:59
-05'00'

TABLE OF CONTENTS

Custom CWS WINDOW SYSTEMS
1900 SW 44TH AVE.
OCALA, FLORIDA 34474
WWW.CWS.CC

615 PVC PICTURE WINDOW NON-IMPACT

NO.:	DESCRIPTION:	BY:	DATE:
A	UPDATE PER TDI REQ	JLD	7/28/21

REVISIONS

STATE OF TEXAS
LUCAS A. TURNER
115094
LICENSED
PROFESSIONAL ENGINEER

9/2/2021

LUCAS A. TURNER, P.E.
TX PE # 115094
2428 Old Natchez Trc Trl
Camden, TN 38320
PH. 941-380-1574

SHEET DESCRIPTION:
GENERAL NOTES AND ELEVATIONS

DRAWN BY:	DATE:
EMK	11/11/15
DWG #: TDI-1112	REV.: A
SCALE: 1:20	SHEET 1 OF 6

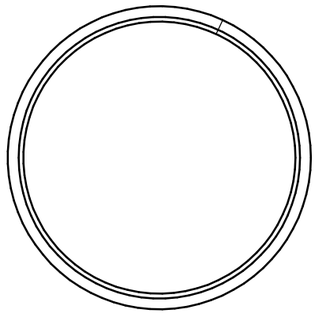

FULL CIRCLE

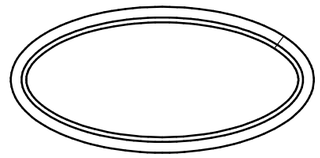

FULL ELLIPSE (OVAL)

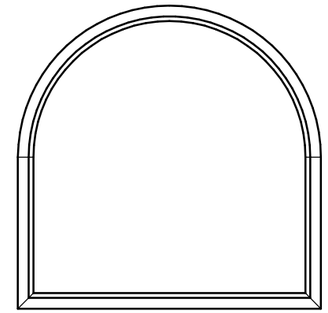

TOMBSTONE

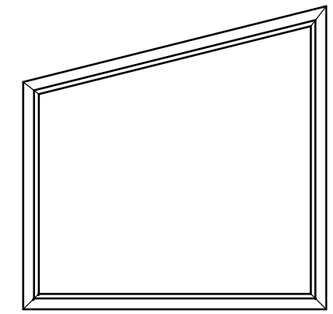

TRAPEZOID

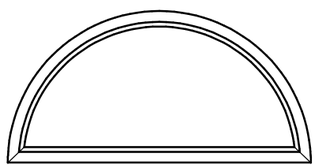

1/2 CIRCLE

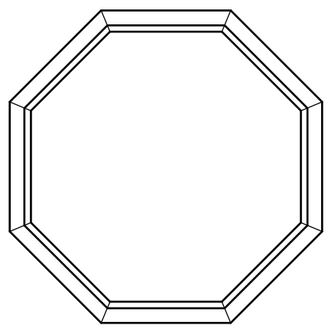

OCTAGON

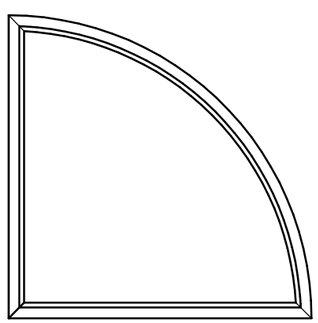

1/4 CIRCLE

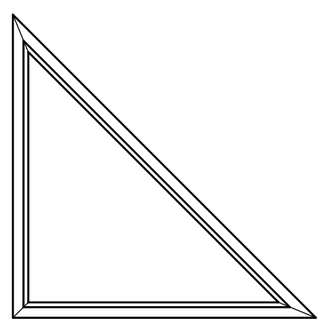

TRIANGLE

NOTES:

1. SEE SHEET 5 FOR DETAILED ANCHOR INSTALLATION REQUIREMENTS.
2. THRU FRAME - MASONRY, WOOD OR METAL OPENING.
   THRU FIN - WOOD OPENING.
3. OVERALL SIZE MUST NOT EXCEED THE MAX. WIDTH AND HEIGHT OF RECTANGULAR WINDOWS ON SHEET 1.
4. ANCHOR SPACING FOR ARCHITECTUAL FLANGE AND FIN WINDOWS MUST FOLLOW THE LAYOUTS SHOWN ON SHEET 5, WITH ANCHOR SPACING MEASURED ALONG THE LENGTH OF THE PRODUCT.

Custom WINDOW SYSTEMS
1900 SW 44TH AVE.
OCALA, FLORIDA 34474
WWW.CWS.CC

615 PVC PICTURE WINDOW NON-IMPACT

REVISIONS

NO.:	DESCRIPTION:	BY:	DATE:
A	UPDATE PER TDI REQ	JLD	7/28/21

9/2/2021

LUCAS A. TURNER, P.E.
TX PE # 115094
2428 Old Natchez Trc Trl
Camden, TN 38320
PH. 941-380-1574

SHEET DESCRIPTION:
ARCHITECTURAL SHAPES

DRAWN BY:	DATE:
EMK	11/11/15
DWG #: TDI-1112	REV.: A
SCALE: 1:1	SHEET 2 OF 6

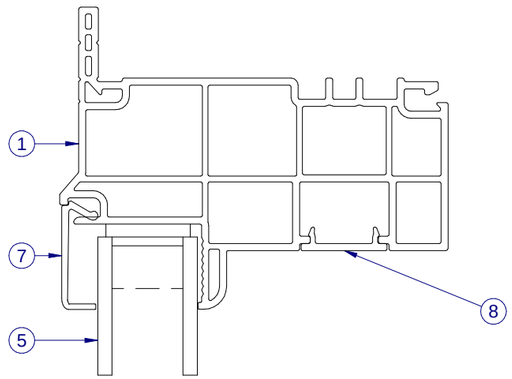

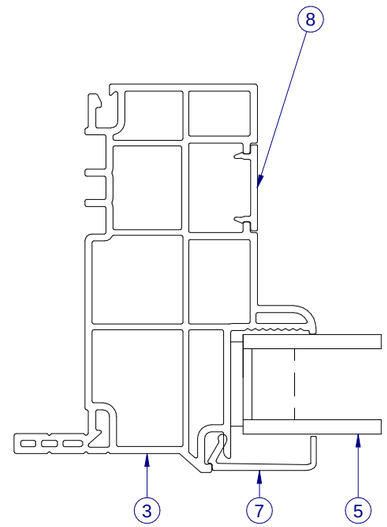

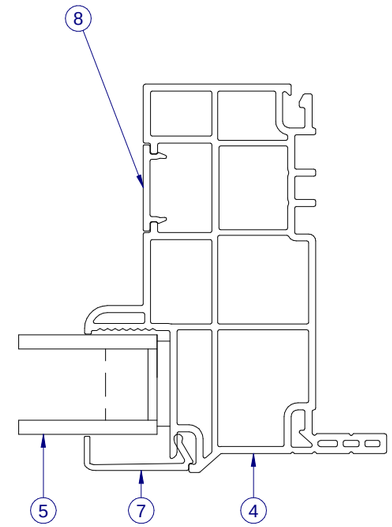

SECTION VIEW B-B

INTERIOR

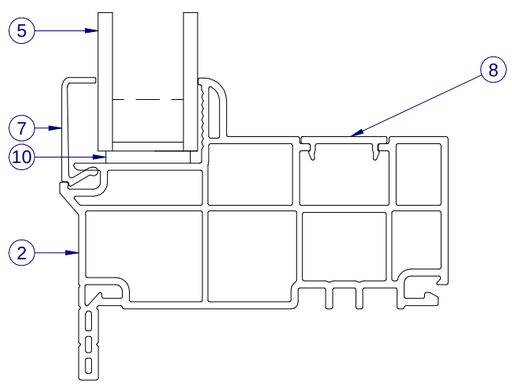

SECTION VIEW A-A

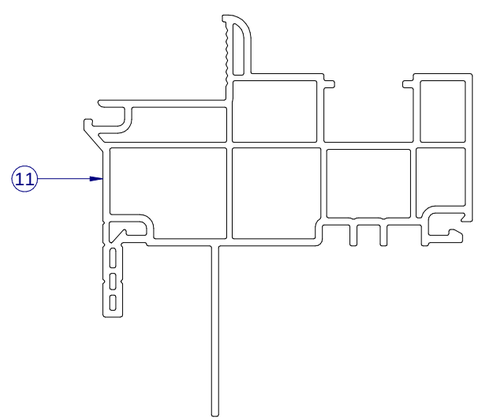

SECTION VIEW C-C
ALTERNATE FIN FRAME

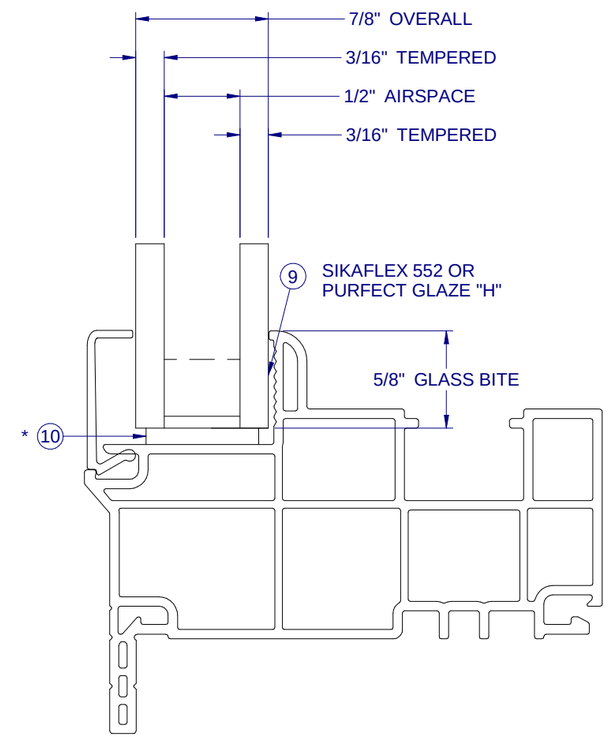

Custom C WINDOW SYSTEMS
1900 SW 44TH AVE.
OCALA, FLORIDA 34474
WWW.CWS.CC

615 PVC PICTURE WINDOW NON-IMPACT

REVISIONS

NO.:	DESCRIPTION:	BY:	DATE:
A	UPDATE PER TDI REQ	JLD	7/28/21

STATE OF TEXAS
LUCAS A. TURNER
115094
LICENSED
PROFESSIONAL ENGINEER

9/2/2021

LUCAS A. TURNER, P.E.
TX PE # 115094
2428 Old Natchez Trc Trl
Camden, TN 38320
PH. 941-380-1574

SHEET DESCRIPTION:
SECTION VIEWS AND GLAZING DETAIL

DRAWN BY:	DATE:
EMK	11/11/15
DWG #: TDI-1112	REV.: A
SCALE: 1:1.33	SHEET 3 OF 6

ITEM	PART #	DESCRIPTION	VENDOR	MATERIAL
1	H-6128FLG	MAIN FRAME, FLANGE, HEAD	ATN	PVC
2	H-6128FLG	MAIN FRAME, FLANGE, SILL	ATN	PVC
3	H-6128FLG	MAIN FRAME, FLANGE, L. JAMB	ATN	PVC
4	H-6128FLG	MAIN FRAME, FLANGE, R. JAMB	ATN	PVC
5	GLASS	SEE SHEET 3		
7	S-6141	GLAZING BEAD	ATN	PVC
8	S-6218	FRAME FILLER	ATN	PVC
9		PURFECT GLAZE "H", SIKAFLEX 552	HENKEL / SIKA	
10	P-3352	SET. BLK., 85 DUR., 1/8" x 5/8" x 2" Lg.		
11	H-6128FIN	MAIN FRAME, FIN, PVC	ATN	PVC

Custom C WINDOW SYSTEMS
1900 SW 44TH AVE.
OCALA, FLORIDA 34474
WWW.CWS.CC

615 PVC PICTURE WINDOW NON-IMPACT

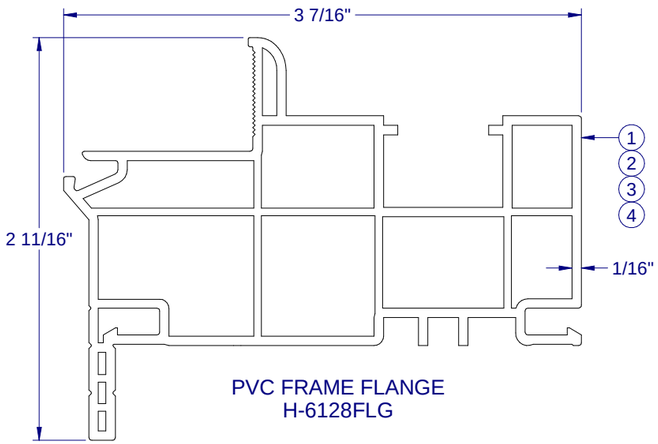

PVC FRAME FLANGE
H-6128FLG

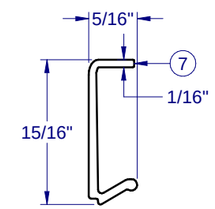

PVC GLAZING BEAD
S-6141

FRAME CORNER CONSTRUCTION

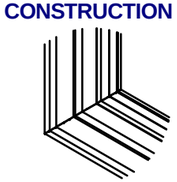

CORNER WELD
(ALL SIDES)
1:8

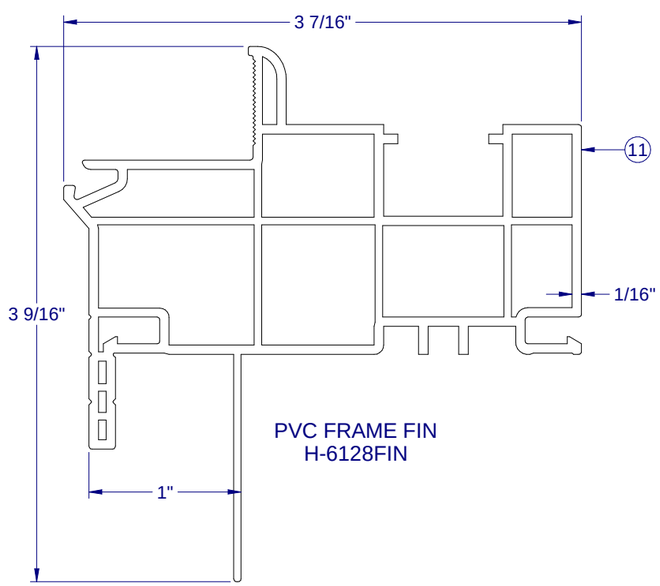

PVC FRAME FIN
H-6128FIN

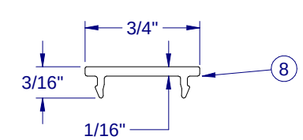

PVC TRIM
S-6218

NO.:	DESCRIPTION:	BY:	DATE:
A	UPDATE PER TDI REQ	JLD	7/28/21

REVISIONS

STATE OF TEXAS
LUCAS A. TURNER
115094
LICENSED
PROFESSIONAL ENGINEER

9/2/2021

LUCAS A. TURNER, P.E.
TX PE # 115094
2428 Old Natchez Trc Trl
Camden, TN 38320
PH. 941-380-1574

SHEET DESCRIPTION:
BOM AND EXTRUSIONS

DRAWN BY:	DATE:
EMK	11/11/15
DWG #: TDI-1112	REV.: A
SCALE: 1:1	SHEET 4 OF 6

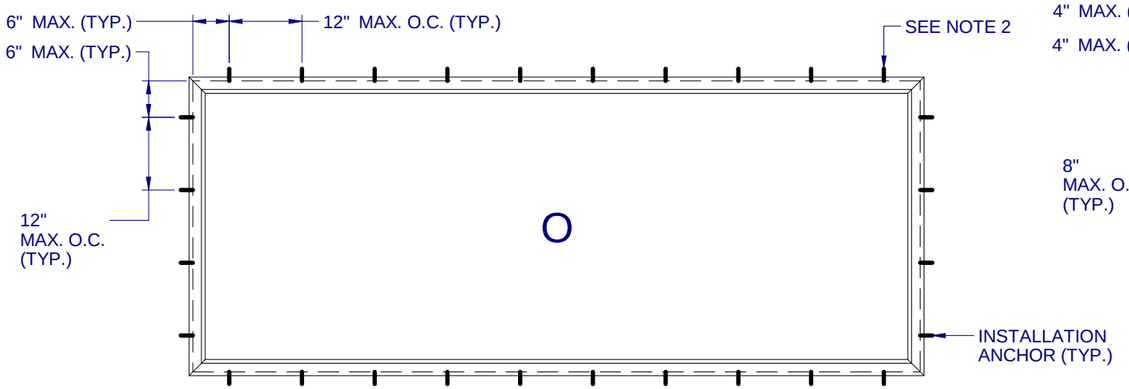

ANCHOR LAYOUT - (FLANGE)

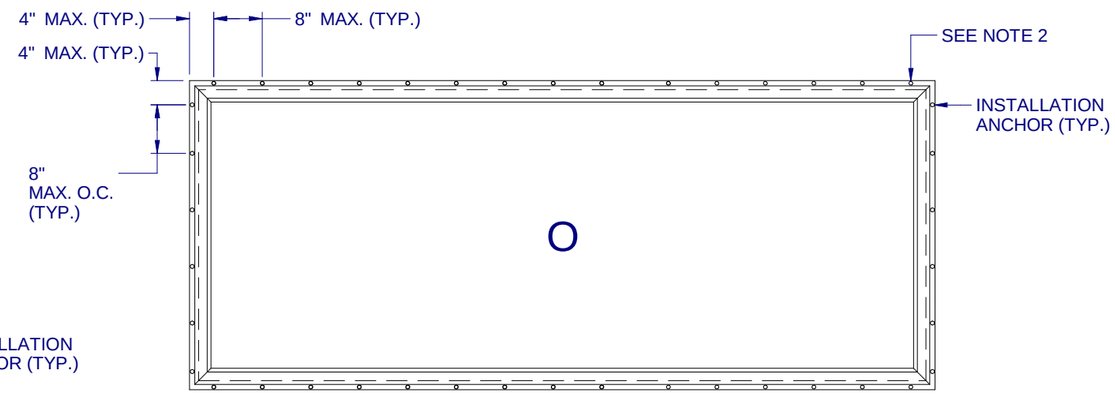

ANCHOR LAYOUT - (FIN)

NOTES:

1. INSTALL ONE ANCHOR AT EACH INSTALLATION LOCATION. ANCHOR SPACING APPLIES TO ALL SHAPES (SEE SHEET 2) ALONG ALL FRAME EDGES. SILL ANCHOR SPACING SAME AS HEAD.

2. SHIM AS REQ AT EACH INSTALLATION ANCHOR USING LOAD BEARING SHIMS. MAX. ALLOWABLE SHIM STACK TO BE 1/4". USE SHIMS WHERE SPACE GREATER THAN 1/16" IS PRESENT. LOAD BEARING SHIMS SHALL BE CONSTRUCTED OF HIGH DENSITY PLASTIC OR BETTER. WOOD SHIMS ARE NOT ALLOWED.

3. ANCHOR TYPE, SIZE, SPACING AND EMBEDMENT SHALL BE AS SPECIFIED IN THESE DRAWINGS, SEE TABLE 1, SHEET 6.

4. ALL INSTALLATION ANCHORS MUST BE MADE OF OR PROTECTED WITH A CORROSION RESISTANT MATERIAL OR COATING. DISSIMILAR METALS OR MATERIALS IN CONTACT WITH PRESSURE TREATED WOOD MUST BE PROTECTED TO PREVENT REACTION.

5. INSTALLATION ANCHORS SHALL BE IN ACCORDANCE WITH ANCHOR MANUFACTURER'S INSTALLATION INSTRUCTIONS, AND ANCHORS SHALL NOT BE USED IN SUBSTRATES WITH STRENGTHS LESS THAN THE MINIMUM SPECIFIED IN TABLE 1, SHEET 6.

6. ANCHOR EMBEDMENT TO SUBSTRATE SHALL BE BEYOND WALL DRESSING OR STUCCO. FOR CONCRETE/CMU OPENINGS, EMBEDMENT SHALL BE BEYOND WOOD BUCKS, IF USED, INTO SUBSTRATE - 1X BUCKS ARE OPTIONAL.

7. A MINIMUM CENTER-TO-CENTER SPACING SHALL BE MAINTAINED BETWEEN ALL FASTENERS: 3" FOR MASONRY, 1" FOR WOOD AND METAL.

8. WOOD OR MASONRY OPENINGS, BUCKS AND BUCK FASTENERS SHALL BE PROPERLY DESIGNED BY THE ARCHITECT OR ENGINEER OF RECORD AND INSTALLED TO TRANSFER WIND LOADS TO THE STRUCTURE. SUBSTRATES SHALL MEET THE MINIMUM STRENGTH REQUIREMENTS AS SHOWN IN TABLE1, SHEET 6. CONCRETE AND MASONRY SUBSTRATES MAY NOT BE CRACKED.

9. SEALING AND FLASHING STRATEGIES FOR OVERALL WATER RESISTANCE OF INSTALLATION SHALL BE DONE BY OTHERS FOLLOWING THE CURRENT VERSION OF THE REFERENCE DOCUMENTS: FMA/AAMA 100(FIN WINDOWS), FMA/AAMA 200(FLANGE WINDOWS), FMA/WDMA 250(BOX WINDOWS), FMA/AAMA/WDMA 300(EXTERIOR DOORS)

Custom WINDOW SYSTEMS
1900 SW 44TH AVE.
OCALA, FLORIDA 34474
WWW.CWS.CC

615 PVC PICTURE WINDOW NON-IMPACT

REVISIONS

NO.:	DESCRIPTION:	BY:	DATE:
A	UPDATE PER TDI REQ	JLD	7/28/21

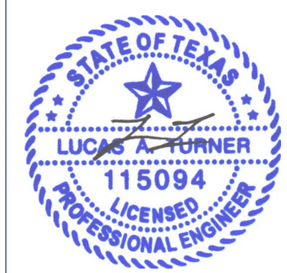

9/2/2021

LUCAS A. TURNER, P.E.
TX PE # 115094
2428 Old Natchez Trc Trl
Camden, TN 38320
PH. 941-380-1574

SHEET DESCRIPTION:
ANCHOR SCHEDULE AND NOTES

DRAWN BY:	DATE:
EMK	11/11/15
DWG #: TDI-1112	REV.: A
SCALE: 1:25	SHEET 5 OF 6

TYPICAL HEAD ANCHORAGE

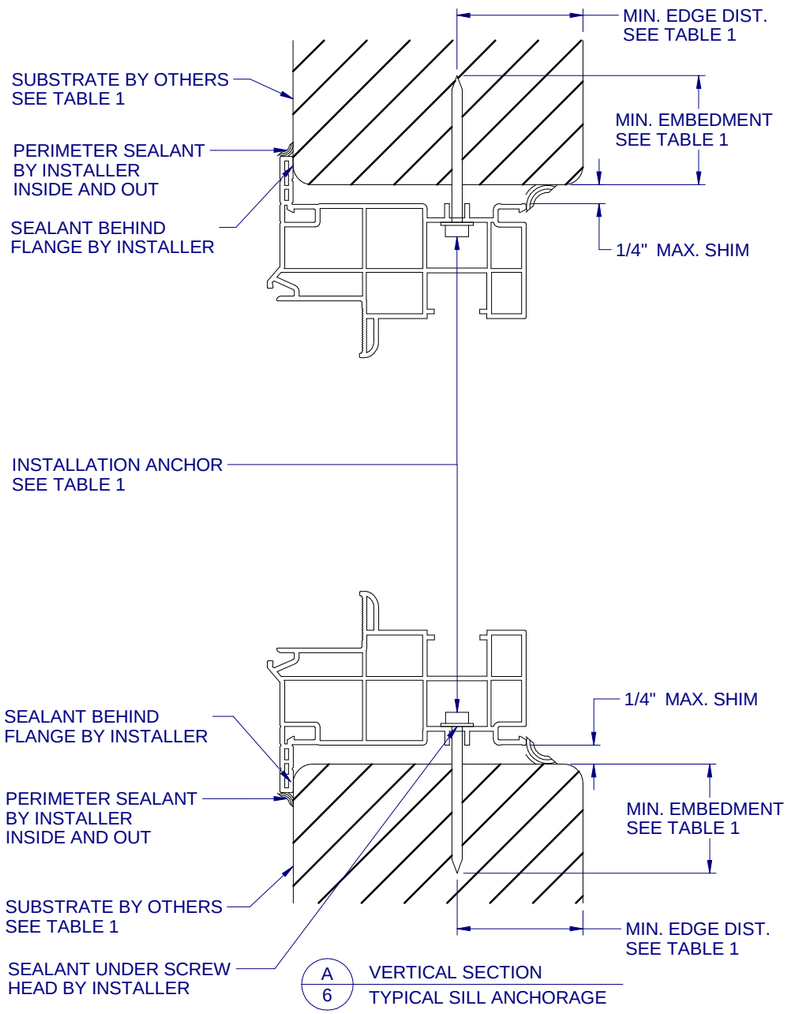

A / 6 VERTICAL SECTION
TYPICAL SILL ANCHORAGE

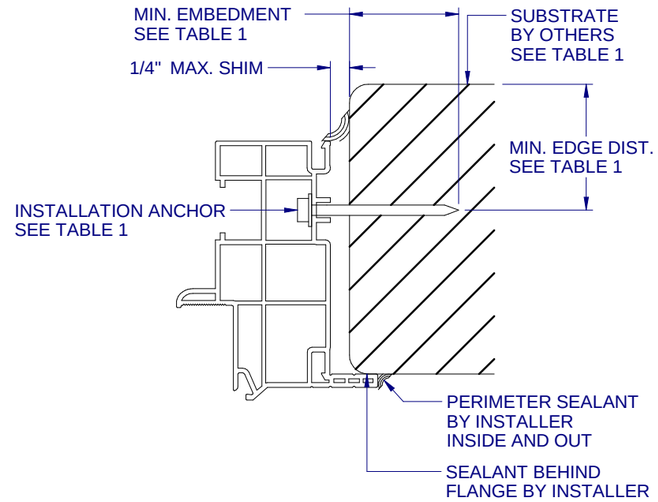

B / 6 HORIZONTAL SECTION
TYPICAL JAMB ANCHORAGE

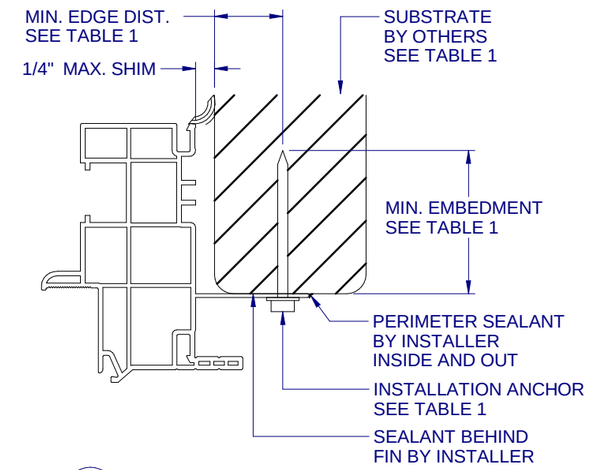

C / 6 HORIZONTAL SECTION
TYPICAL FIN ANCHORAGE
HEAD AND SILL SIMILAR FOR FIN INSTALLATION

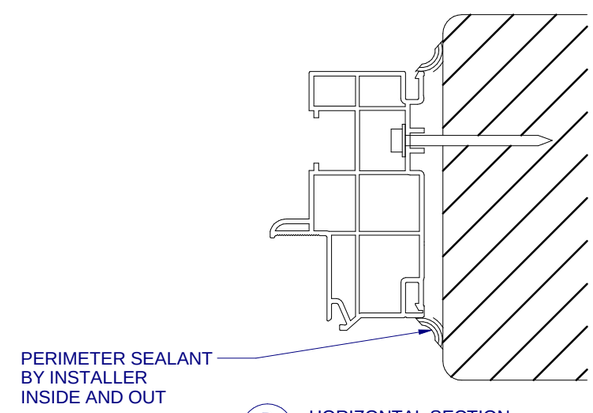

D / 6 HORIZONTAL SECTION
BOX FRAME INSTALLATION
HEAD AND SILL SIMILAR FOR BOX INSTALLATION

TABLE 1: APPROVED INSTALLATION FASTENERS

FRAME TYPE	SUBSTRATE TYPE	ANCHOR TYPE	MIN. EMBEDMENT	MIN. EDGE DIST.
FLANGE	CONCRETE (2.0 KSI MIN.)	3/16" ITW TAPCON	1-1/2"	1-1/8"
FLANGE	HOLLOW OR GROUT-FILLED CMU (117 PCF MIN.)	3/16" ITW TAPCON	1"	2"
FLANGE	CONCRETE (2.85 KSI MIN.)	3/16" ELCO ULTRACON	1"	1"
FLANGE	GROUT-FILLED CMU (ASTM C-90)	3/16" ELCO ULTRACON	1-1/4"	2-1/2"
FLANGE	2X MIN. SOUTHERN PINE (G=0.55)	3/16" ITW TAPCON OR ELCO ULTRACON	1-3/8"	7/8"
FLANGE	2X MIN. SOUTHERN PINE (G=0.55)	#10 WOOD SCREW	1-3/8"	7/8"
FLANGE	16 GAUGE (0.060") MIN. STEEL STUD (33 KSI YIELD MIN)	#10-16 HILTI KWIK-FLEX OR ITW TEKS SELF-DRILLING SCREW	FULL THREAD THRU 0.060"	7/16"
FLANGE	1/8" ALUM. (6063-T5 MIN.) OR 1/8" STEEL (33 KSI MIN.)	#10 GRADE 5 SELF-TAPPING / DRILLING SCREW	FULL THREAD THRU 0.125"	7/16"
FIN	2X MIN. SOUTHERN PINE (G=0.55)	#8 WOOD SCREW	1-1/2"	7/16"

FLANGE REMOVAL NOTE: PARTIALLY OR FULLY REMOVING THE FLANGE, UP TO AND INCLUDING A BOX-FRAME APPLICATION IS ACCEPTABLE PROVIDED:

- MIN. 1/4" FILLET OF CONSTRUCTION-GRADE ADHESIVE CAULK IS APPLIED INSIDE AND OUT, FULL PERIMETER, BY INSTALLER.
- PRODUCT ANCHORAGE IS IN ACCORDANCE WITH REQUIREMENTS AS SHOWN FOR FLANGE WINDOWS.

Custom WINDOW SYSTEMS
1900 SW 44TH AVE.
OCALA, FLORIDA 34474
WWW.CWS.CC

615 PVC PICTURE WINDOW NON-IMPACT

REVISIONS

NO.:	DESCRIPTION:	BY:	DATE:
A	UPDATE PER TDI REQ	JLD	7/28/21

STATE OF TEXAS
LUCAS A. TURNER
115094
LICENSED
PROFESSIONAL ENGINEER

9/2/2021

LUCAS A. TURNER, P.E.
TX PE # 115094
2428 Old Natchez Trc Trl
Camden, TN 38320
PH. 941-380-1574

SHEET DESCRIPTION:
INSTALLATION DETAILS

DRAWN BY:	DATE:
EMK	11/11/15
DWG #: TDI-1112	REV.: A
SCALE: 1:2	SHEET 6 OF 6