REVISIONS			
REV	DESCRIPTION	DATE	APPROVED

NOTES:

1. THE PRODUCT SHOWN HEREIN IS DESIGNED AND MANUFACTURED TO COMPLY WITH REQUIREMENTS OF THE 2006 IBC AND 2006 IRC WITH STATE OF TEXAS MODIFICATIONS.
2. WOOD FRAMING AND MASONRY OPENING TO BE DESIGNED AND ANCHORED TO PROPERLY TRANSFER ALL LOADS TO STRUCTURE. FRAMING AND MASONRY OPENING IS THE RESPONSIBILITY OF THE ARCHITECT OR ENGINEER OF RECORD.
3. 1X BUCK OVER MASONRY/CONCRETE IS OPTIONAL. WHERE 1X BUCK IS NOT USED DISSIMILAR MATERIALS MUST BE SEPARATED WITH APPROVED COATING OR MEMBRANE. SELECTION OF COATING OR MEMBRANE IS THE RESPONSIBILITY OF THE ARCHITECT OR ENGINEER OF RECORD.
4. ALLOWABLE STRESS INCREASE OF 1/3 WAS NOT USED IN THE DESIGN OF THE PRODUCT SHOWN HEREIN. WIND LOAD DURATION FACTOR Cd=1.6 WAS USED FOR WOOD ANCHOR CALCULATIONS.
5. FRAME MATERIAL: EXTRUDED RIGID FOAM PVC.
6. UNITS MUST BE GLAZED PER ASTM E1300–04, SEE SHEET 2 FOR GLASS OPTIONS.
7. APPROVED IMPACT PROTECTIVE SYSTEM <u>IS REQUIRED</u> FOR THIS PRODUCT IN WIND BORNE DEBRIS REGIONS.
8. SHIM AS REQUIRED AT EACH INSTALLATION ANCHOR WITH LOAD BEARING SHIM. SHIM WHERE SPACE OF 1/16" OR GREATER OCCURS. MAXIMUM ALLOWABLE SHIM STACK TO BE 1/4".
9. FOR ANCHORING INTO WOOD FRAMING OR 2X BUCK USE #10 WOOD SCREWS WITH SUFFICIENT LENGTH TO ACHIEVE A 1 3/8" MINIMUM EMBEDMENT INTO SUBSTRATE. LOCATE ANCHORS AS SHOWN IN ELEVATIONS AND INSTALLATION DETAILS.
10. FOR ANCHORING INTO MASONRY/CONCRETE USE 3/16" TAPCONS WITH SUFFICIENT LENGTH TO ACHIEVE A 1 1/4" MINIMUM EMBEDMENT INTO SUBSTRATE WITH 2 5/8'' MINIMUM EDGE DISTANCE. LOCATE ANCHORS AS SHOWN IN ELEVATIONS AND INSTALLATION DETAILS.
11. ALL FASTENERS TO BE CORROSION RESISTANT.
12. INSTALLATION ANCHORS SHALL BE INSTALLED IN ACCORDANCE WITH ANCHOR MANUFACTURER'S INSTALLATION INSTRUCTIONS AND ANCHORS SHALL NOT BE USED IN SUBSTRATES WITH STRENGTHS LESS THAN THE MINIMUM STRENGTH SPECIFIED BELOW:
    A. WOOD – MINIMUM SPECIFIC GRAVITY OF G=0.42
    B. CONCRETE – MINIMUM COMPRESSIVE STRENGTH OF 3,192 PSI.
    C. MASONRY – STRENGTH CONFORMANCE TO ASTM C–90, GRADE N, TYPE 1 (OR GREATER).
13. TRANSOM UNITS MAY BE INSTALLED VERTICALLY OR HORIZONTALLY.

SIGNED: 07/11/2013

TABLE OF CONTENTS

SHEET NO.	DESCRIPTION
1 – 2	ELEVATIONS AND NOTES
3	INSTALLATION DETAILS

NAN YA PLASTICS CORP. USA
8989 NORTH LOOP EAST
HOUSTON, TX 77029

GTO 12020 OUTSWING TRANSOM
NON–IMPACT
NOTES

DRAWN:	DWG NO.	REV
V.L.	08–02133	–

SCALE	DATE	SHEET
NTS	07/11/13	1 OF 3

STATE OF TEXAS
LUIS R. LOMAS
101889
LICENSED
PROFESSIONAL ENGINEER

Luis R. Lomas P.E.
TX No.: 101889

REVISIONS			
REV	DESCRIPTION	DATE	APPROVED

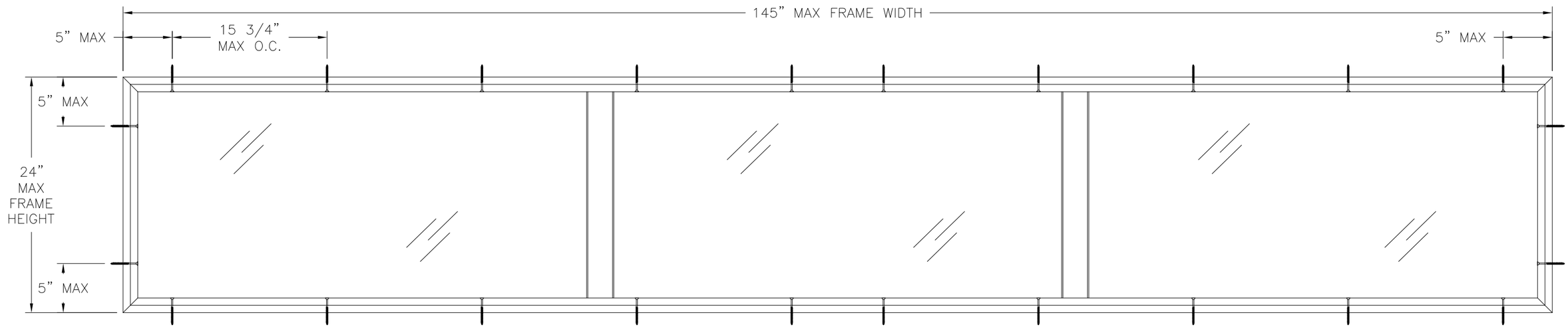

GTO 12020 OUTSWING TRANSOM

EXTERIOR VIEW

DESIGN PRESSURE RATING	IMPACT RATING
±75.0PSF	NONE

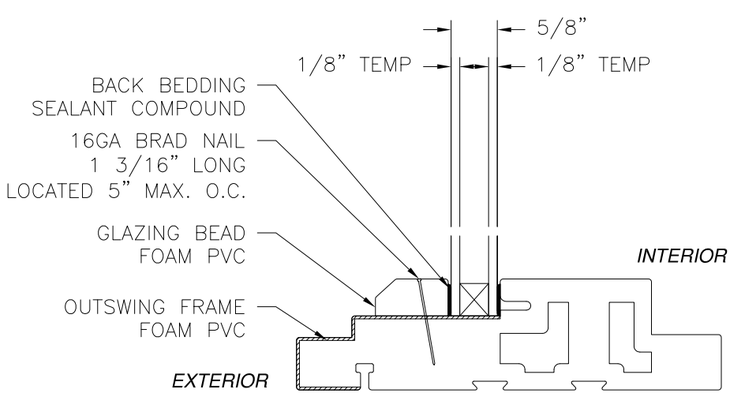

GLAZING DETAIL

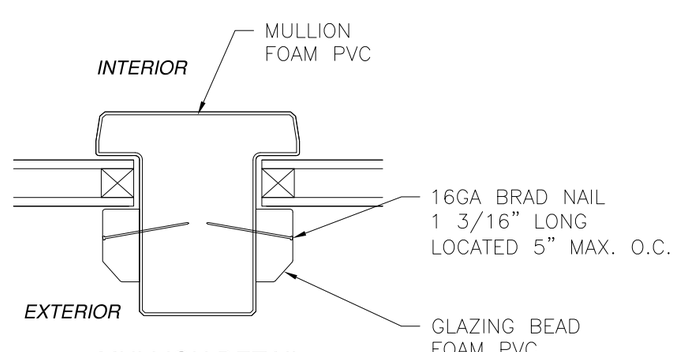

MULLION DETAIL

SIGNED: 07/11/2013

NAN YA PLASTICS CORP. USA
8989 NORTH LOOP EAST
HOUSTON, TX 77029

GTO 12020 OUTSWING TRANSOM
NON-IMPACT
ELEVATION AND DETAILS

DRAWN:	DWG NO.	REV
V.L.	08-02133	–
SCALE NTS	DATE 07/11/13	SHEET 2 OF 3

STATE OF TEXAS
LUIS R. LOMAS
101889
LICENSED
PROFESSIONAL ENGINEER

Luis R. Lomas P.E.
TX No.: 101889

REVISIONS			
REV	DESCRIPTION	DATE	APPROVED

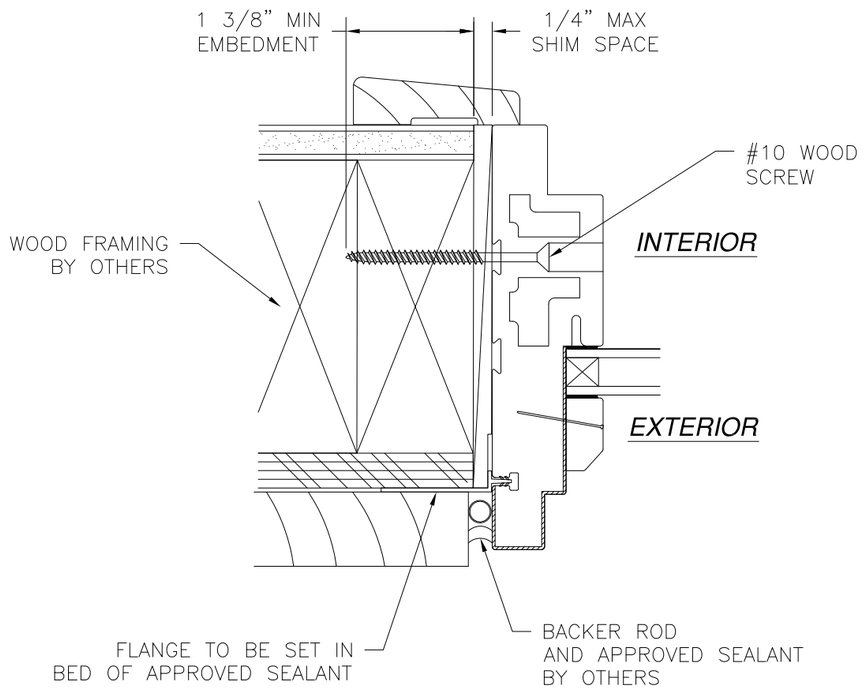

HORIZONTAL CROSS SECTION
2X BUCK/WOOD FRAMING INSTALLATION
JAMB SHOWN HEAD AND SILL SIMILAR

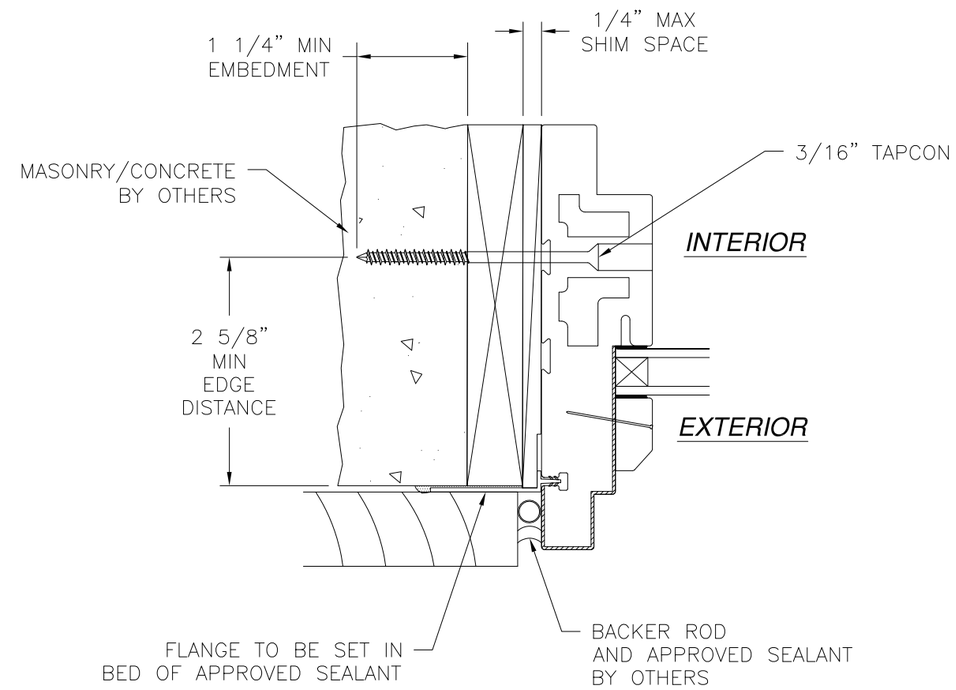

HORIZONTAL CROSS SECTION
MASONRY/CONCRETE INSTALLATION
JAMB SHOWN HEAD AND SILL SIMILAR

SIGNED: 07/11/2013

NAN YA PLASTICS CORP. USA
8989 NORTH LOOP EAST
HOUSTON, TX 77029

GTO 12020 OUTSWING TRANSOM
NON-IMPACT
INSTALLATION DETAILS

DRAWN:	DWG NO.	REV
V.L.	08-02133	–
SCALE NTS	DATE 07/11/13	SHEET 3 OF 3

Luis R. Lomas P.E.
TX No.: 101889