REVISIONS			
REV	DESCRIPTION	DATE	APPROVED

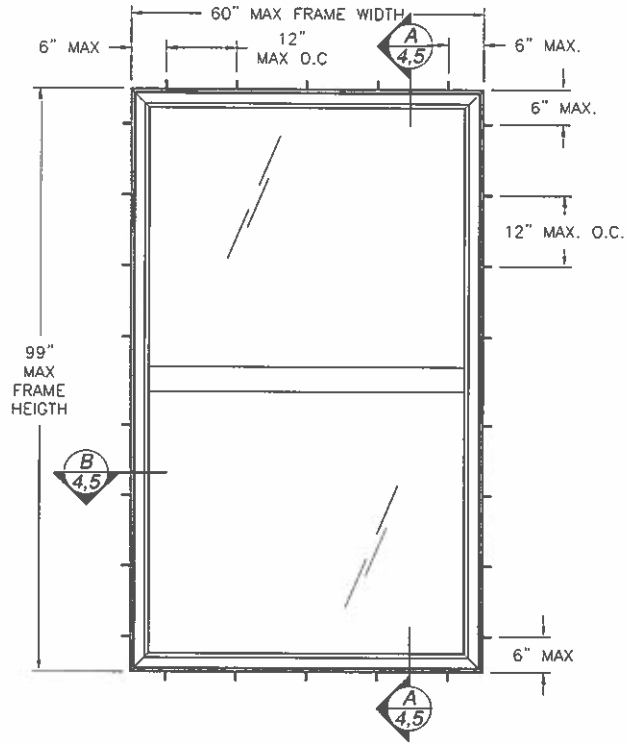

WINDQUEST V707 SINGLE HUNG WINDOW

EXTERIOR VIEW FRAME FLUSH INSTALLATION

DESIGN PRESSURE RATING	IMPACT RATING
±40PSF	NONE

NOTES:

1) THE PRODUCT SHOWN HEREIN IS DESIGNED AND MANUFACTURED TO COMPLY WITH REQUIREMENTS OF THE 2006 IBC AND 2006 IRC WITH STATE OF TEXAS MODIFICATIONS.
2) WOOD FRAMING AND MASONRY OPENING TO BE DESIGNED AND ANCHORED TO PROPERLY TRANSFER ALL LOADS TO STRUCTURE. FRAMING AND MASONRY OPENING IS THE RESPONSIBILITY OF THE ARCHITECT OR ENGINEER OF RECORD.
3) 1X BUCK OVER MASONRY/CONCRETE IS OPTIONAL. WHERE 1X BUCK IS NOT USED DISSIMILAR MATERIALS MUST BE SEPARATED WITH APPROVED COATING OR MEMBRANE. SELECTION OF COATING OR MEMBRANE IS THE RESPONSIBILITY OF THE ARCHITECT OR ENGINEER OF RECORD.
4) ALLOWABLE STRESS INCREASE OF 1/3 WAS NOT USED IN THE DESIGN OF THE PRODUCT SHOWN HEREIN. WIND LOAD DURATION FACTOR Cd=1.6 WAS USED FOR WOOD ANCHOR CALCULATIONS.
5) FRAME MATERIAL: EXTRUDED RIGID PVC.
6) UNITS MUST BE GLAZED PER ASTM E1300-04. SEE SHEET 3 FOR GLASS OPTIONS.
7) APPROVED IMPACT PROTECTIVE SYSTEM IS REQUIRED FOR THIS PRODUCT IN WIND BORNE DEBRIS REGIONS.
8) SHIM AS REQUIRED AT EACH INSTALLATION ANCHOR WITH LOAD BEARING SHIM. SHIM WHERE SPACE OF 1/16" OR GREATER OCCURS. MAXIMUM ALLOWABLE SHIM STACK TO BE 1/4".
9) FOR ANCHORING INTO MASONRY/CONCRETE USE 3/16" TAPCONS WITH SUFFICIENT LENGTH TO ACHIEVE A 1 1/4" MINIMUM EMBEDMENT INTO SUBSTRATE WITH 2 1/2" MINIMUM EDGE DISTANCE. LOCATE ANCHORS AS SHOWN IN ELEVATIONS AND INSTALLATION DETAILS.
10) FOR ANCHORING INTO WOOD FRAMING OR 2X BUCK USE #10 WOOD SCREWS WITH SUFFICIENT LENGTH TO ACHIEVE A 1 3/8" MINIMUM EMBEDMENT INTO SUBSTRATE. LOCATE ANCHORS AS SHOWN IN ELEVATIONS AND INSTALLATION DETAILS.
11) FOR ANCHORING INTO METAL STRUCTURE USE #10 SMS OR SELF DRILLING SCREWS SCREWS WITH SUFFICIENT LENGTH TO ACHIEVE 3 THREADS MINIMUM BEYOND STRUCTURE INTERIOR WALL. LOCATE ANCHORS AS SHOWN IN ELEVATIONS AND INSTALLATION DETAILS.
12) ALL FASTENERS TO BE CORROSION RESISTANT.
13) INSTALLATION ANCHORS SHALL BE INSTALLED IN ACCORDANCE WITH ANCHOR MANUFACTURER'S INSTALLATION INSTRUCTIONS, AND ANCHORS SHALL NOT BE USED IN SUBSTRATES WITH STRENGTHS LESS THAN THE MINIMUM STRENGTH SPECIFIED BELOW:
    A. WOOD - MINIMUM SPECIFIC GRAVITY OF G=0.42
    B. CONCRETE - MINIMUM COMPRESSIVE STRENGTH OF 3,192 PSI.
    C. MASONRY - STRENGTH CONFORMANCE TO ASTM C-90, GRADE N, TYPE 1 (OR GREATER).
    D. METAL STRUCTURE: STEEL 18GA. 33KSI OR ALUMINUM 6063-T5 1/8" THICK MINIMUM

SIGNED: 07/26/2013

WEEP HOLE LOCATIONS:

1) 3/4" X 1/8" HOLES LOCATED 3" FROM EACH END OF BOTTOM RAIL AND EXTERIOR SCREEN RETAINER TRACK.
2) 1" X 1/4" HOLES, WITH COVER, LOCATED 3 1/4" FROM EACH END OF EXTERIOR SILL FACE.
3) 3/4" X 1" HOLES, LOCATED 1" FROM EACH END OF INTERIOR SILL TRACK.

TABLE OF CONTENTS

SHEET NO.	DESCRIPTION
1, 2	ELEVATION, ANCHORING AND NOTES
3	CROSS SECTIONS AND B.O.M.
4 - 8	INSTALLATION DETAILS
9	COMPONENTS

KOLBE & KOLBE MILLWORK
1211 DEPOT ST
MANAWA, MI 54949

WINDQUEST V707 SINGLE HUNG WINDOW
60" x 99" - NON-IMPACT
ELEVATION AND NOTES

DRAWN:	DWG NO.	REV
V.L.	08-02172	-
SCALE NTS	DATE 07/26/13	SHEET 1 OF 9

STATE OF TEXAS
LUIS R. LOMAS
101889
LICENSED
PROFESSIONAL ENGINEER

Luis R. Lomas P.E.
TX No.: 101889

REVISIONS			
REV	DESCRIPTION	DATE	APPROVED

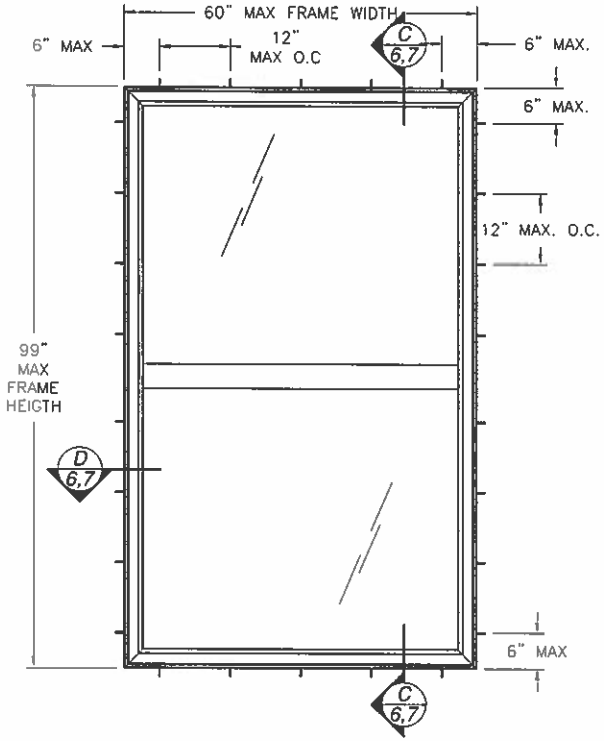

WINDQUEST V707 SINGLE HUNG WINDOW
EXTERIOR VIEW STRAP INSTALLATION

DESIGN PRESSURE RATING	IMPACT RATING
±40PSF	NONE

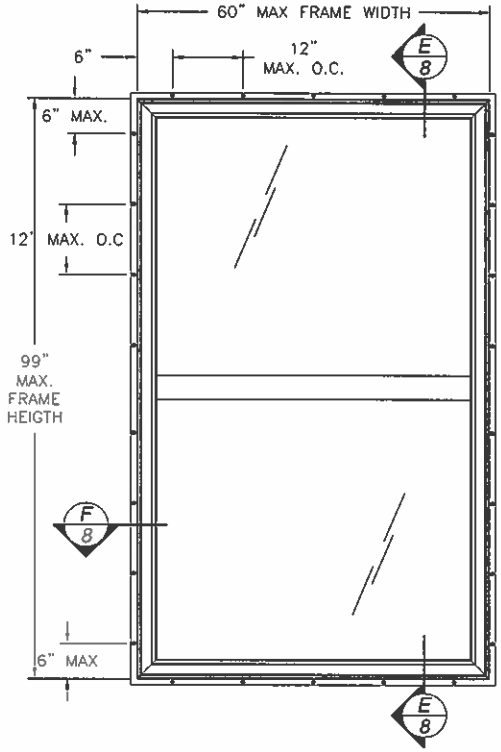

WINDQUEST V707 SINGLE HUNG WINDOW
EXTERIOR VIEW NAILING FIN INSTALLATION

DESIGN PRESSURE RATING	IMPACT RATING
±40PSF	NONE

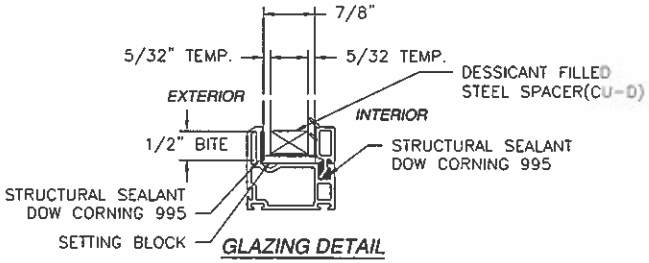

GLAZING DETAIL

SIGNED: 07/26/2013

KOLBE & KOLBE MILLWORK
1211 DEPOT ST
MANAWA, MI 54949

WINDQUEST V707 SINGLE HUNG WINDOW
60" x 99" - NON-IMPACT
ELEVATION AND NOTES

DRAWN: V.L.	DWG NO. 08-02172	REV -
SCALE NTS	DATE 07/26/13	SHEET 2 OF 9

STATE OF TEXAS
LUIS R. LOMAS
101889
LICENSED
PROFESSIONAL ENGINEER

Luis R. Lomas P.E.
TX No.: 101889

PARTS LIST				
NO.	PART NUMBER	DESCRIPTION	MANUFACTURER	MATERIAL
1	4254	MULLION	THERMOPLAST INC	WHITE PVC
2	4202	FRAME	THERMOPLAST INC	WHITE PVC
3	4008	EXTERIOR SILL	THERMOPLAST INC	WHITE PVC
4	4084A	SASH INTERLOCK	THERMOPLAST INC	WHITE PVC
5	4027A	SASH FRAME	THERMOPLAST INC	WHITE PVC
6	4019	SILL ADAPTOR	THERMOPLAST INC	WHITE PVC
7	4022	7/8" GLAZING BEAD	THERMOPLAST INC	WHITE PVC
8	4010	SASH STOP	THERMOPLAST INC	WHITE PVC
9	4013	7/8" GLAZING BEAD	THERMOPLAST INC	WHITE PVC
10		7/16" SCREEN FRAME		
11	LDB-100109T	WHEATHERSTRIP	SCHLEGEL	
12	HF-7320-187	WHEATHERSTRIP	SCHLEGEL	
13	PB-8830-187	WHEATHERSTRIP	SCHLEGEL	
14	19X25.4X3.2mm	SETTING BLOCK		80 DUROMETER
15	090101	BALANCE	FERCO	
16	090151	BALANCE SUPPORT	FERCO	
17	090155	TILT SHOE	FERCO	
18	M090161	PIVOT	FERCO	
19		TILT LATCH	FASCO	
20	97-03-00-00	VALVE	GEARMOLD	
21	SL047500	LOCK	ROTO	
22	SL047550	KEEPER	ROTO	
23	995	STRUCTURAL SEALANT	DOW CORNING	
24	4052	MULLION CONNECTOR		
25		BALANCE SCREWS PH #8 X 1"		
26		LOCK SCREWS FH #6 X 1"		
27		KEEPER SCREWS FH #6 X 1 1/2"		
28		PIVOT SCREWS FH #8 X 1/2"		
29		SCREEN SUPPORT FH #8 X 1/2"		
30	4053	SCREEN SUPPORT		
31	A112	MULLION REINFORCEMENT		ALUMINUM 6063-T5
32		RECEPTACLE SCREWS FH #10 X 2"		
33		RECEPTACLE	FASCO	
34		TILT LATCH SCREWS FH #8 X 1"		
35	A110	SASH REINFORCEMENT		ALUMINUM 6063-T5
36		REINFORCEMENT SCREWS #8 X 1/2"		
37		MULLION SCREWS PH #10 X 3"		
38	A111	MEETING RAIL REINFORCEMENT		ALUMINUM 6063-T5
39	4202E	FRAME, NAILING FIN	THERMOPLAST	WHITE PVC
40	4560	INSTALLATION STRIP		STEEL G60

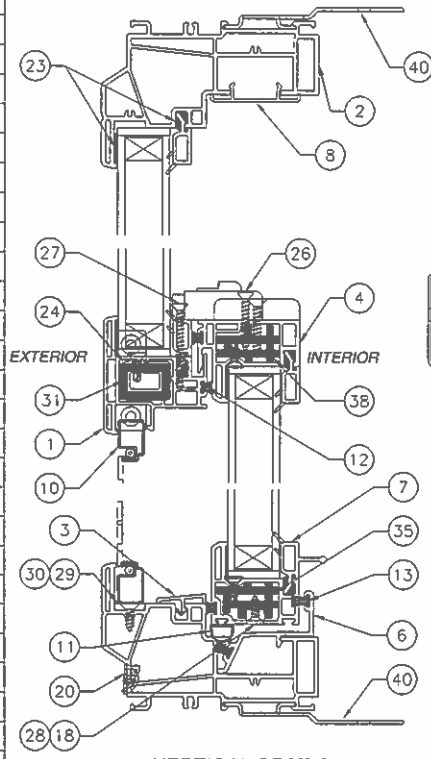

VERTICAL SECTION

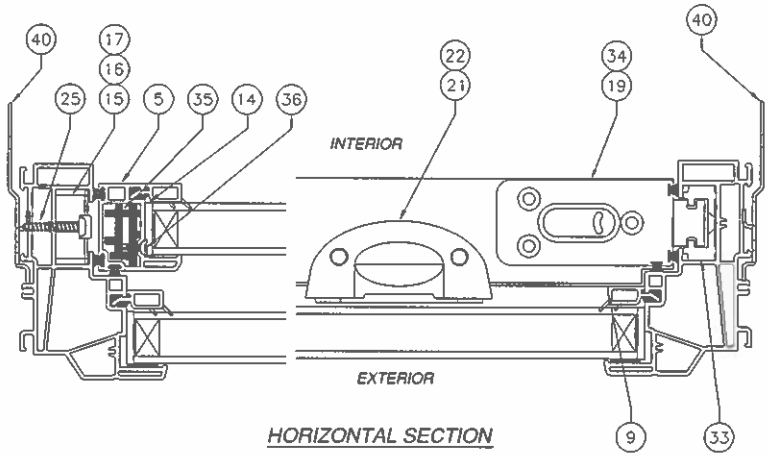

HORIZONTAL SECTION

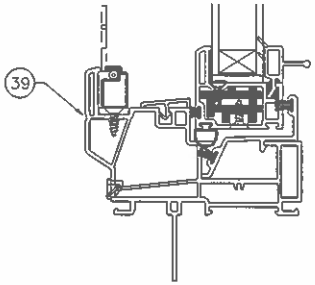

OPTIONAL NAILING FIN FRAME

SIGNED: 07/26/2013

REVISIONS			
REV	DESCRIPTION	DATE	APPROVED

KOLBE & KOLBE MILLWORK
1211 DEPOT ST
MANAWA, MI 54949

WINDQUEST V707 SINGLE HUNG WINDOW
60" x 99" - NON-IMPACT
CROSS SECTIONS AND B.O.M.

DRAWN: V.L.	DWG NO. 08-02172	REV –
SCALE NTS	DATE 07/26/13	SHEET 3 OF 9

STATE OF TEXAS
LUIS R. LOMAS
101889
LICENSED
PROFESSIONAL ENGINEER

Luis R. Lomas P.E.
TX No.: 101889

REVISIONS			
REV	DESCRIPTION	DATE	APPROVED

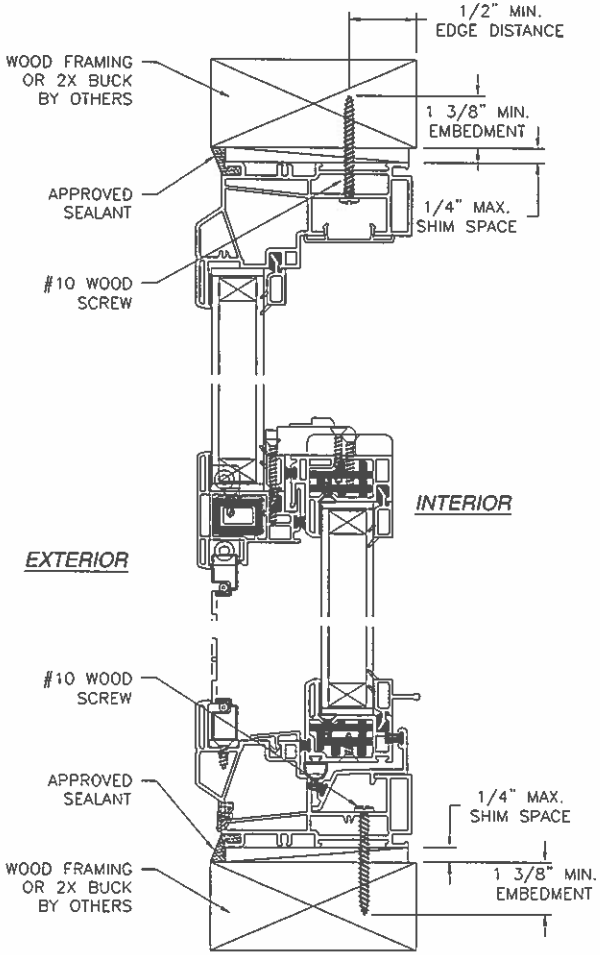

A/4 SECTION
FLUSH INSTALLATION
WOOD FRAMING OR 2X BUCK

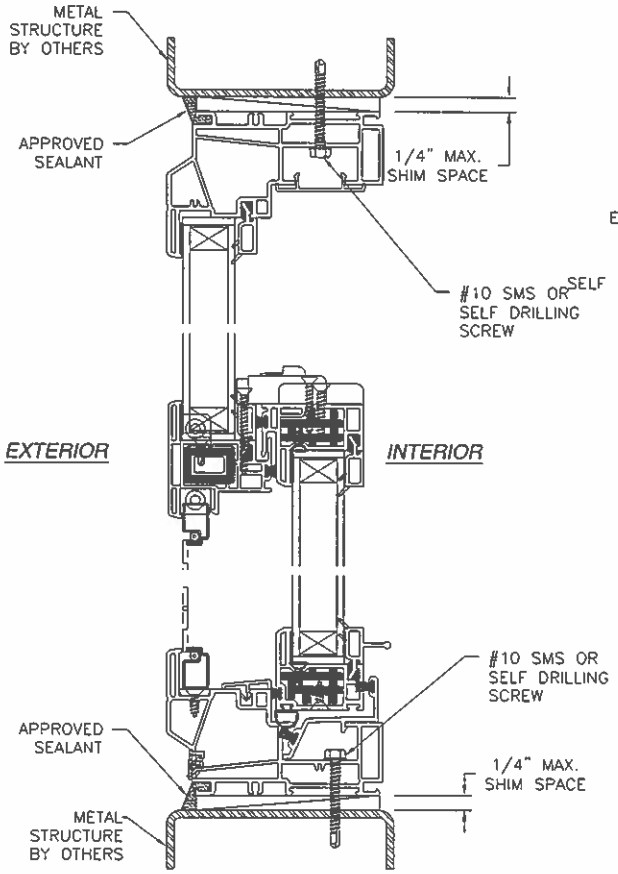

A/4 SECTION
FLUSH INSTALLATION
METAL STRUCTURE

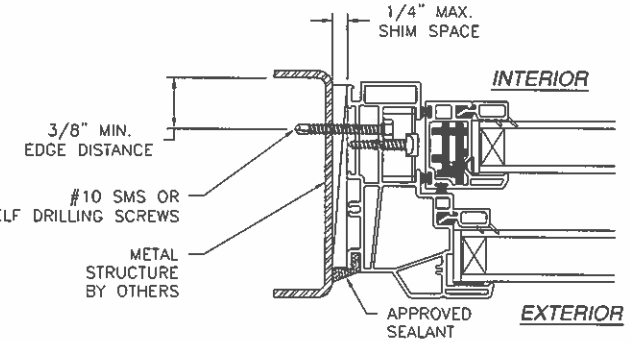

B/4 SECTION
FLUSH INSTALLATION
METAL STRUCTURE

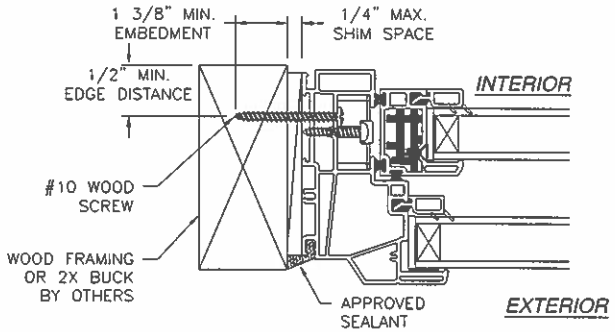

B/4 SECTION
FLUSH INSTALLATION
WOOD FRAMING OR 2X BUCK

SIGNED: 07/26/2013

NOTE:
INTERIOR AND EXTERIOR FINISHES, BY OTHERS, NOT SHOWN FOR CLARITY.

KOLBE & KOLBE MILLWORK
1211 DEPOT ST
MANAWA, MI 54949

WINDQUEST V707 SINGLE HUNG WINDOW
60" x 99" – NON-IMPACT
INSTALLATION DETAILS

DRAWN: V.L.	DWG NO. 08-02172	REV –
SCALE NTS	DATE 07/26/13	SHEET 4 OF 9

STATE OF TEXAS
LUIS R. LOMAS
101889
LICENSED
PROFESSIONAL ENGINEER

Luis R. Lomas P.E.
TX No.: 101889

REVISIONS			
REV	DESCRIPTION	DATE	APPROVED

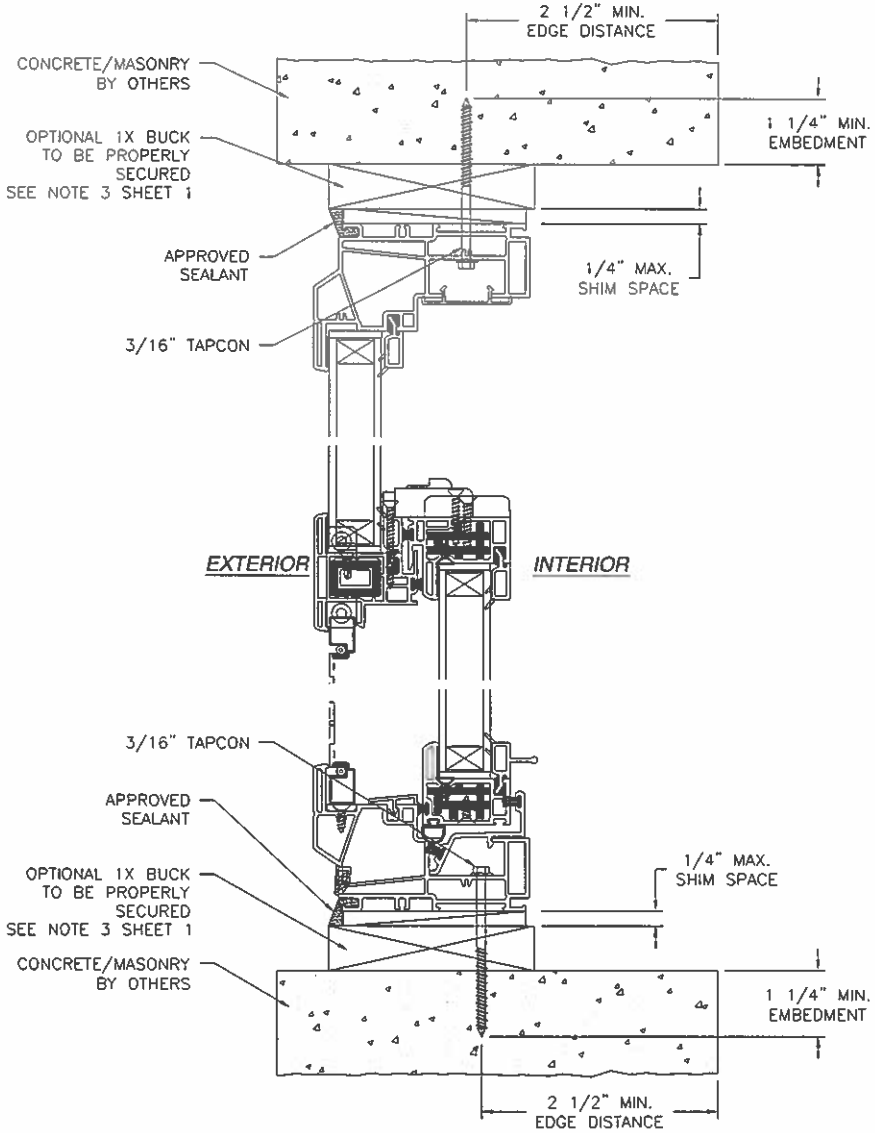

A/5 **SECTION**
FLUSH INSTALLATION
CONCRETE/MASONRY

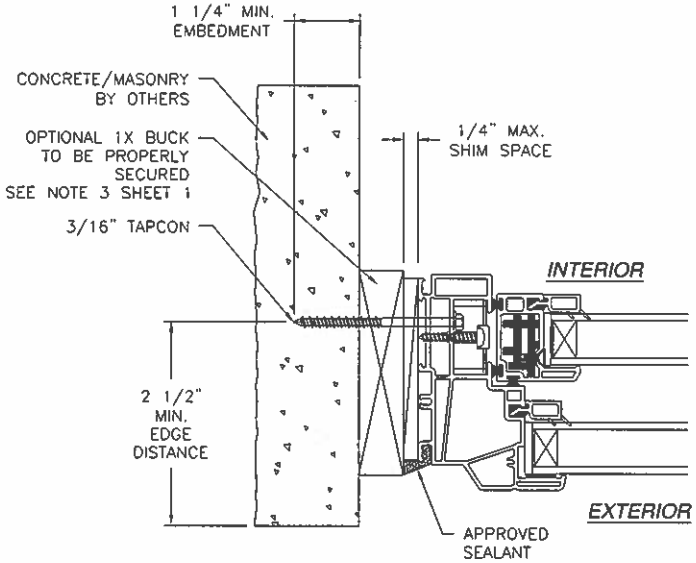

B/5 **SECTION**
FLUSH INSTALLATION
CONCRETE/MASONRY

NOTE:
INTERIOR AND EXTERIOR FINISHES, BY OTHERS, NOT SHOWN FOR CLARITY.

SIGNED: 07/26/2013

KOLBE & KOLBE MILLWORK
1211 DEPOT ST
MANAWA, MI 54949

WINDQUEST V707 SINGLE HUNG WINDOW
60" x 99" – NON-IMPACT
INSTALLATION DETAILS

DRAWN:	DWG NO.	REV
V.L.	08-02172	–
SCALE NTS	DATE 07/26/13	SHEET 5 OF 9

Luis R. Lomas P.E.
TX No.: 101889

REVISIONS			
REV	DESCRIPTION	DATE	APPROVED

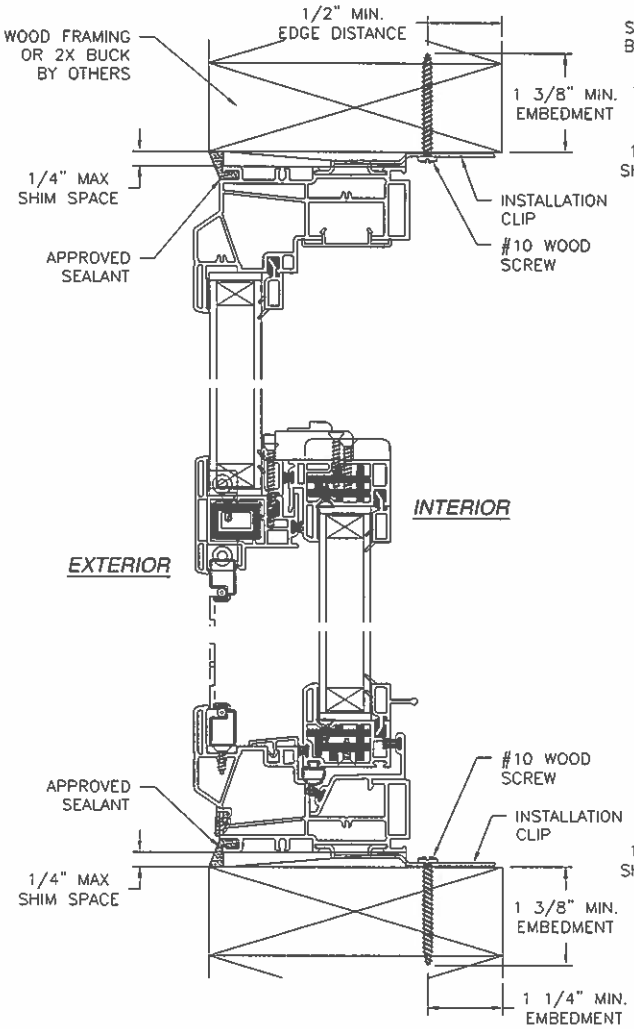

C/6 SECTION
STRAP INSTALLATION
WOOD FRAMING OR 2X BUCK

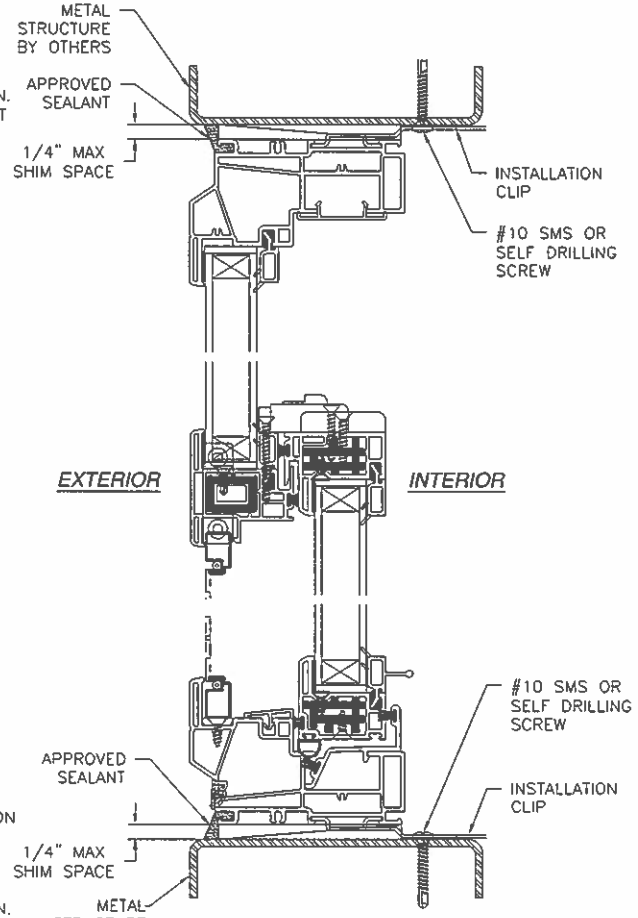

C/6 SECTION
STRAP INSTALLATION
METAL STRUCTURE

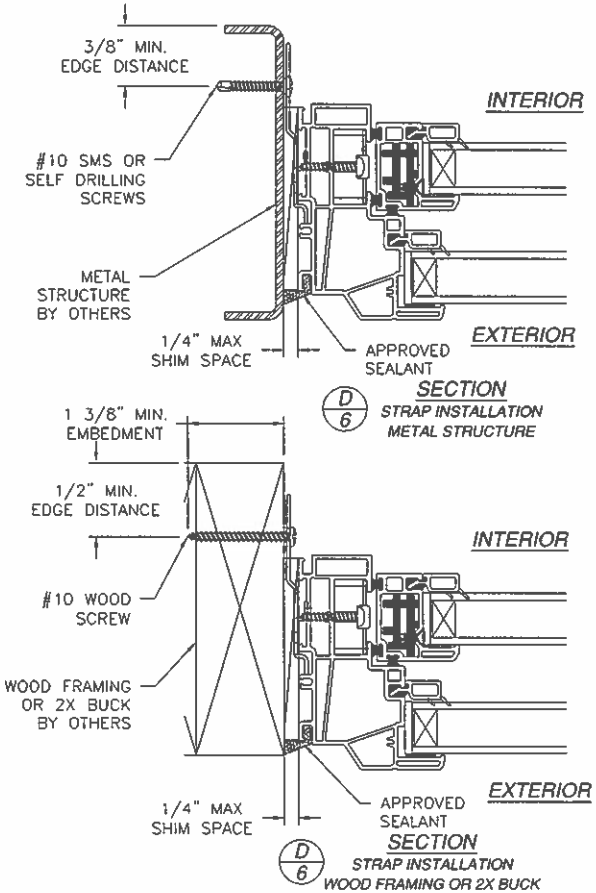

D/6 SECTION
STRAP INSTALLATION
METAL STRUCTURE

D/6 SECTION
STRAP INSTALLATION
WOOD FRAMING OR 2X BUCK

SIGNED: 07/26/2013

NOTE:
INTERIOR AND EXTERIOR FINISHES, BY OTHERS, NOT SHOWN FOR CLARITY.

KOLBE & KOLBE MILLWORK
1211 DEPOT ST
MANAWA, MI 54949

WINDQUEST V707 SINGLE HUNG WINDOW
60" x 99" - NON-IMPACT
INSTALLATION DETAILS

DRAWN: V.L.	DWG NO. 08-02172	REV –
SCALE NTS	DATE 07/26/13	SHEET 6 OF 9

STATE OF TEXAS
LUIS R. LOMAS
101889
LICENSED
PROFESSIONAL ENGINEER

Luis R. Lomas P.E.
TX No.: 101889

REVISIONS			
REV	DESCRIPTION	DATE	APPROVED

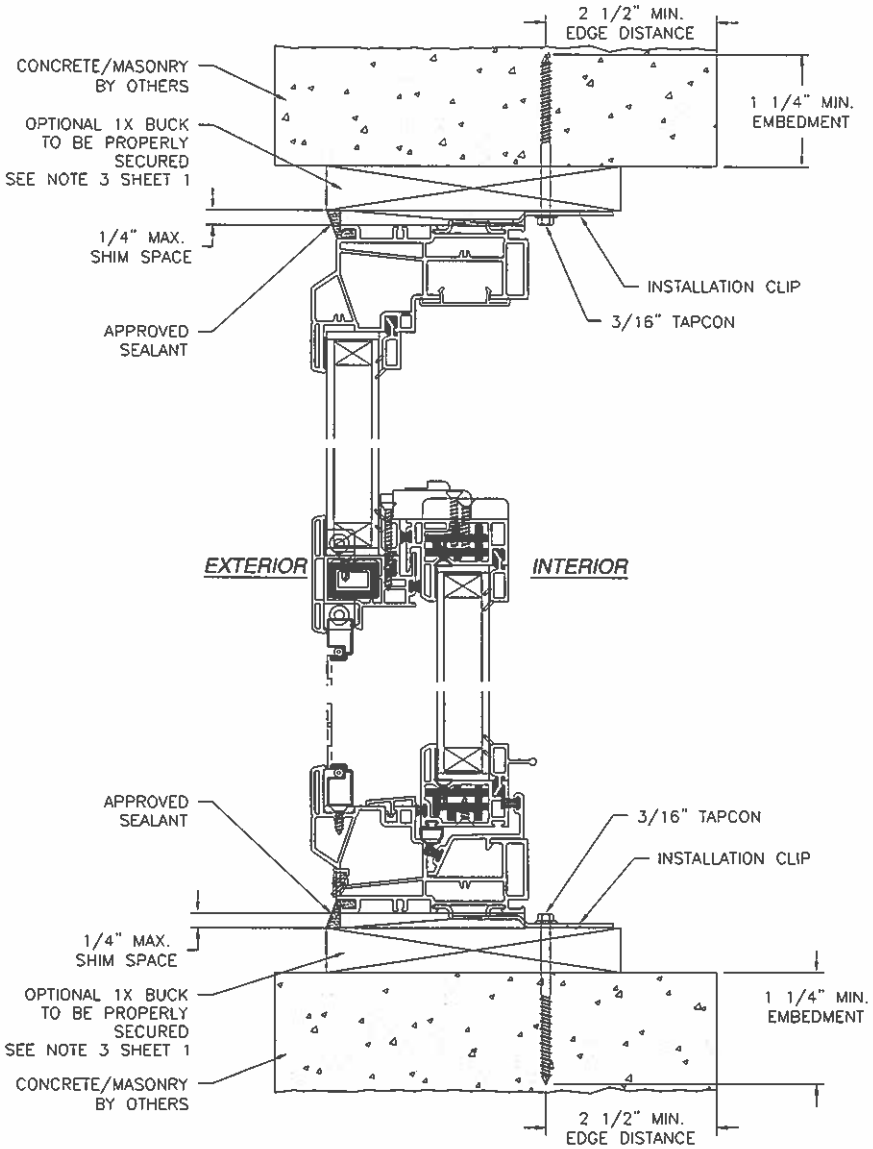

C/7 **SECTION**
STRAP INSTALLATION
CONCRETE/MASONRY

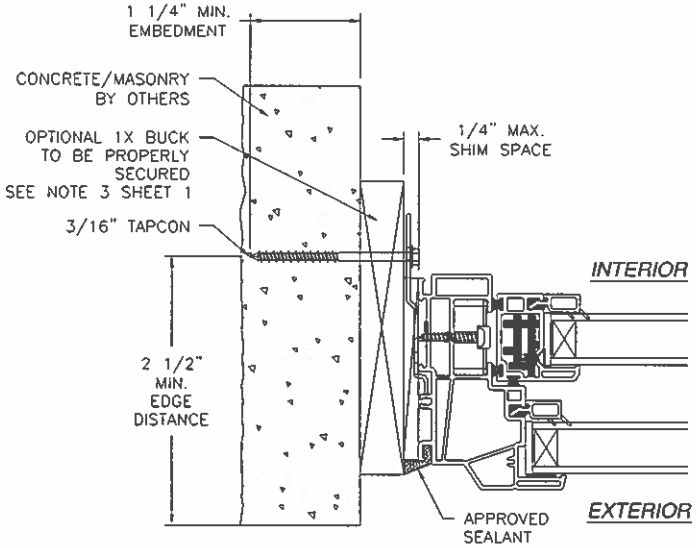

D/7 **SECTION**
STRAP INSTALLATION
CONCRETE/MASONRY

NOTE:
INTERIOR AND EXTERIOR FINISHES, BY OTHERS. NOT SHOWN FOR CLARITY.

SIGNED: 07/26/2013

KOLBE & KOLBE MILLWORK
1211 DEPOT ST
MANAWA, MI 54949

WINDQUEST V707 SINGLE HUNG WINDOW
60" x 99" – NON-IMPACT
INSTALLATION DETAILS

DRAWN:	DWG NO.	REV
V.L.	08-02172	–
SCALE NTS	DATE 07/26/13	SHEET 7 OF 9

Luis R. Lomas P.E.
TX No.: 101889

REVISIONS			
REV	DESCRIPTION	DATE	APPROVED

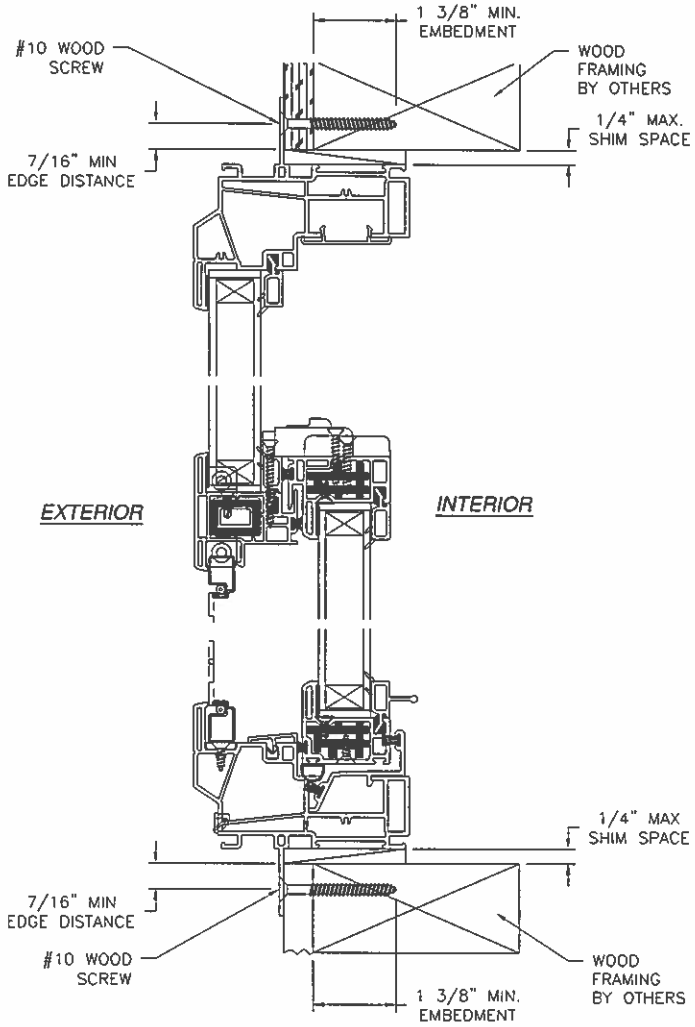

E/8 SECTION
NAIL FIN INSTALLATION
WOOD FRAMING OR 2X BUCK

NOTE:
INTERIOR AND EXTERIOR FINISHES, BY OTHERS, NOT SHOWN FOR CLARITY.

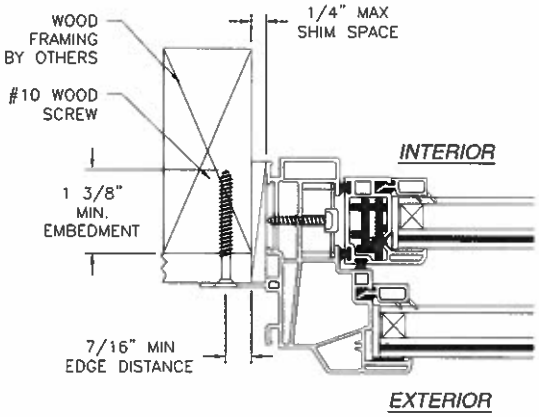

F/8 SECTION
NAIL FIN INSTALLATION
WOOD FRAMING OR 2X BUCK

SIGNED: 07/26/2013

KOLBE & KOLBE MILLWORK
1211 DEPOT ST
MANAWA, MI 54949

WINDQUEST V707 SINGLE HUNG WINDOW
60" x 99" – NON-IMPACT
INSTALLATION DETAILS

DRAWN:	DWG NO.	REV
V.L.	08-02172	–
SCALE NTS	DATE 07/26/13	SHEET 8 OF 9

Luis R. Lomas P.E.
TX No.: 101889

REVISIONS			
REV	DESCRIPTION	DATE	APPROVED

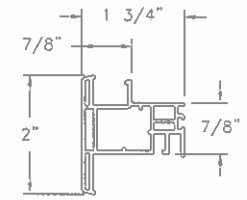

1 MULLION
VINYL PVC .059 THICK

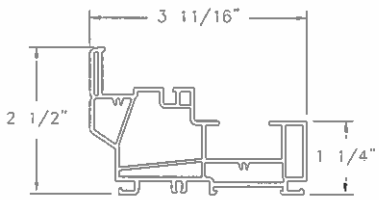

2 FRAME
VINYL PVC .069 THICK

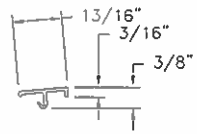

3 EXTERIOR SILL
VINYL PVC .051 THICK

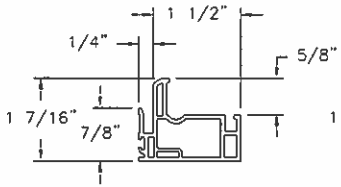

4 SASH INTERLOCK
VINYL PVC .069 THICK

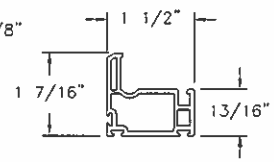

5 SASH FRAME
VINYL PVC .069 THICK

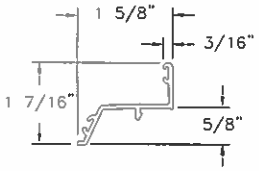

6 SILL ADAPTER
VINYL PVC .069 THICK

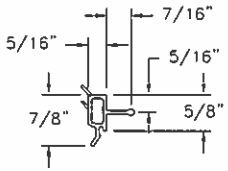

7 7/8" GLAZING BEAD
VINYL PVC .059 THICK

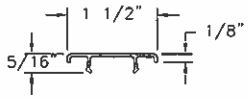

8 SASH STOP
VINYL PVC .047 THICK

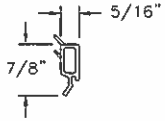

9 7/8" GLAZING BEAD
VINYL PVC .059 THICK

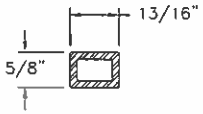

31 MULLION REINFORCEMENT
AL 6063-T5 .118 THICK

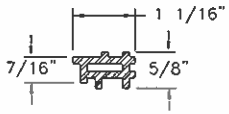

35 SASH REINFORCEMENT
AL 6063-T5 .118 THICK

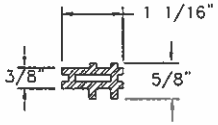

38 RAIL REINFORCEMENT
AL 6063-T5 .118 THICK

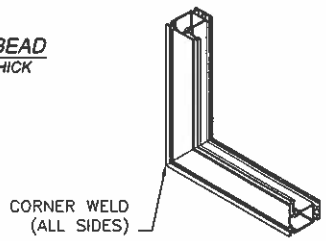

SASH CORNER CONSTRUCTION

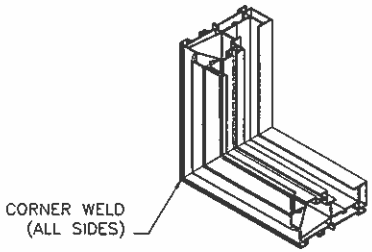

FRAME CORNER CONSTRUCTION

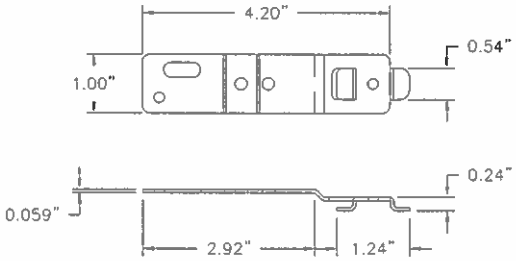

40 INSTALLATION STRIP
GALVANIZED STEEL G60

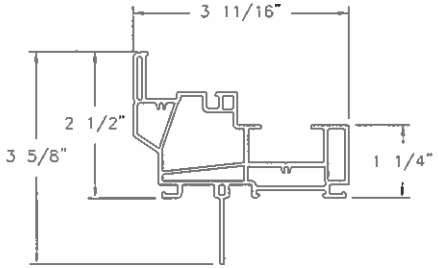

39 FRAME (NAILING FIN)
VINYL PVC .069 THICK

SIGNED: 07/26/2013

KOLBE & KOLBE MILLWORK
1211 DEPOT ST
MANAWA, MI 54949

WINDQUEST V707 SINGLE HUNG WINDOW
60" x 99" – NON-IMPACT
COMPONENTS

DRAWN:	DWG NO.	REV
V.L.	08-02172	–
SCALE NTS	DATE 07/26/13	SHEET 9 OF 9

Luis R. Lomas P.E.
TX No.: 101889