REVISIONS			
REV	DESCRIPTION	DATE	APPROVED

NOTES:

1) THE PRODUCT SHOWN HEREIN IS DESIGNED AND MANUFACTURED TO COMPLY WITH REQUIREMENTS OF THE 2006 IBC AND 2006 IRC WITH STATE OF TEXAS MODIFICATIONS.
2) WOOD FRAMING AND MASONRY OPENING TO BE DESIGNED AND ANCHORED TO PROPERLY TRANSFER ALL LOADS TO STRUCTURE. FRAMING AND MASONRY OPENING IS THE RESPONSIBILITY OF THE ARCHITECT OR ENGINEER OF RECORD.
3) 1X BUCK OVER MASONRY/CONCRETE IS OPTIONAL. WHERE 1X BUCK IS NOT USED DISSIMILAR MATERIALS MUST BE SEPARATED WITH APPROVED COATING OR MEMBRANE. SELECTION OF COATING OR MEMBRANE IS THE RESPONSIBILITY OF THE ARCHITECT OR ENGINEER OF RECORD.
4) ALLOWABLE STRESS INCREASE OF 1/3 WAS NOT USED IN THE DESIGN OF THE PRODUCT SHOWN HEREIN. WIND LOAD DURATION FACTOR Cd=1.6 WAS USED FOR WOOD ANCHOR CALCULATIONS.
5) FRAME MATERIAL: EXTRUDED RIGID PVC.
6) UNITS MUST BE GLAZED PER ASTM E1300-04.
7) APPROVED IMPACT PROTECTIVE SYSTEM IS REQUIRED FOR THIS PRODUCT IN WIND BORNE DEBRIS REGIONS.
8) SHIM AS REQUIRED AT EACH INSTALLATION ANCHOR WITH LOAD BEARING SHIM. SHIM WHERE SPACE OF 1/16" OR GREATER OCCURS. MAXIMUM ALLOWABLE SHIM STACK TO BE 1/4".
9) FOR ANCHORING INTO MASONRY/CONCRETE USE 3/16" TAPCONS WITH SUFFICIENT LENGTH TO ACHIEVE A 1 1/4" MINIMUM EMBEDMENT INTO SUBSTRATE WITH 2 1/2" MINIMUM EDGE DISTANCE. LOCATE ANCHORS AS SHOWN IN ELEVATIONS AND INSTALLATION DETAILS.
10) FOR ANCHORING INTO WOOD FRAMING OR 2X BUCK USE #8 WOOD SCREWS WITH SUFFICIENT LENGTH TO ACHIEVE A 1 1/4" MINIMUM EMBEDMENT INTO SUBSTRATE. LOCATE ANCHORS AS SHOWN IN ELEVATIONS AND INSTALLATION DETAILS.
11) FOR ANCHORING INTO METAL STRUCTURE USE #8 SMS OR SELF DRILLING SCREWS SCREWS WITH SUFFICIENT LENGTH TO ACHIEVE 3 THREADS MINIMUM BEYOND STRUCTURE INTERIOR WALL. LOCATE ANCHORS AS SHOWN IN ELEVATIONS AND INSTALLATION DETAILS.
12) ALL FASTENERS TO BE CORROSION RESISTANT.
13) INSTALLATION ANCHORS SHALL BE INSTALLED IN ACCORDANCE WITH ANCHOR MANUFACTURER'S INSTALLATION INSTRUCTIONS, AND ANCHORS SHALL NOT BE USED IN SUBSTRATES WITH STRENGTHS LESS THAN THE MINIMUM STRENGTH SPECIFIED BELOW:
    A. WOOD – MINIMUM SPECIFIC GRAVITY OF G=0.42
    B. CONCRETE – MINIMUM COMPRESSIVE STRENGTH OF 3,192 PSI.
    C. MASONRY – STRENGTH CONFORMANCE TO ASTM C-90, GRADE N, TYPE 1 (OR GREATER).
    D. METAL STRUCTURE: STEEL 18GA, 33KSI OR ALUMINUM 6063-T5 1/8" THICK MINIMUM

SIGNED: 07/23/2013

TABLE OF CONTENTS

SHEET NO.	DESCRIPTION
1	NOTES
2	ELEVATION
3	CROSS SECTIONS AND B.O.M.
4 – 5	INSTALLATION DETAILS
6	COMPONENTS AND GLAZING DETAIL

KOLBE & KOLBE MILLWORK
1211 DEPOT ST
MANAWA, MI 54949

WINDQUEST V707 NON-IMPACT HP AWNING WINDOW
53 X 32
NOTES

DRAWN:	DWG NO.	REV
V.L.	08-02167	–

SCALE	DATE	SHEET
NTS	07/23/13	1 OF 6

STATE OF TEXAS
LUIS R. LOMAS
101889
LICENSED
PROFESSIONAL ENGINEER

Luis R. Lomas P.E.
TX No.: 101889

REVISIONS			
REV	DESCRIPTION	DATE	APPROVED

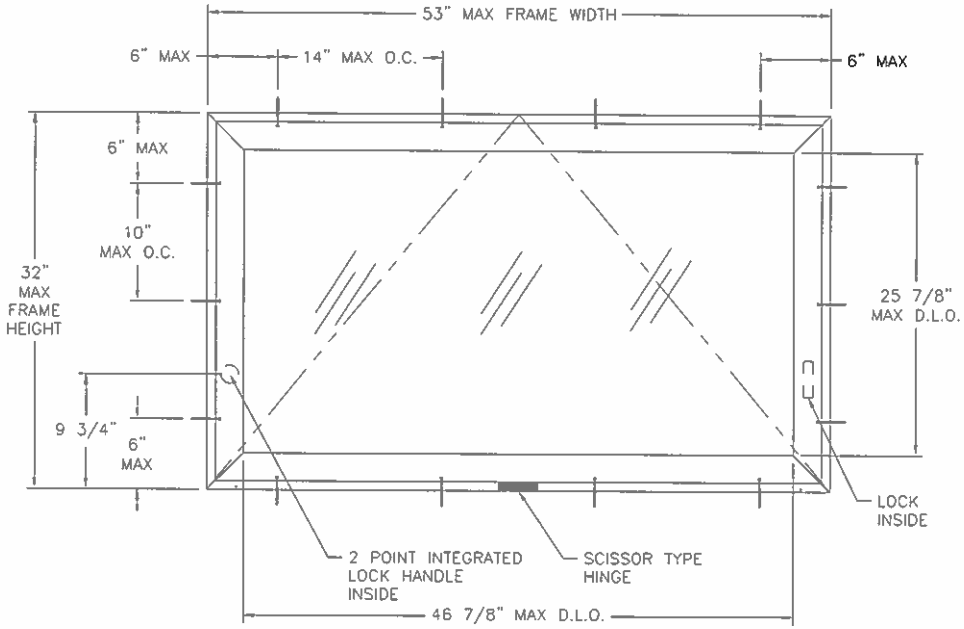

WINDQUEST V707 NON-IMPACT HP AWNING WINDOW
EXTERIOR VIEW

DESIGN PRESSURE RATING	IMPACT RATING
±60PSF	NONE

SIGNED: 07/23/2013

KOLBE & KOLBE MILLWORK
1211 DEPOT ST
MANAWA, MI 54949

WINDQUEST V707 NON-IMPACT HP AWNING WINDOW
53 X 32
ELEVATION

DRAWN:	DWG NO.	REV
V.L.	08-02167	–
SCALE NTS	DATE 07/23/13	SHEET 2 OF 6

STATE OF TEXAS
LUIS R. LOMAS
101889
LICENSED
PROFESSIONAL ENGINEER

Luis R. Lomas P.E.
TX No.: 101889

PARTS LIST				
NO.	PART NUMBER	DESCRIPTION	MANUFACTURER	MATERIAL
1	4506	FRAME	THERMOPLAST INC	WHITE PVC
2	4413	7/8" GLAZING BEAD	THERMOPLAST INC	WHITE PVC
3	8619	SASH	THERMOPLAST INC	WHITE PVC
4	PB-8830-187	WEATHER STRIP	SCHLEGEL	
5		SETTING BLOCK (23X50.8X32mm)		80 DUROMETER
6	HG040-703	HINGES	ROTO	
7	OP05-7540	AWNING DUAL ARM OPERATOR	ROTO	
8	OP05-1003-51	1/8" BOTTOM SPACER	ROTO	
9	G2HNDLPLT-02	FASTENER PLATE	ROTO	
10	LB05-1004-51	TIE BAR GUIDE	ROTO	
11	6011	OPERATOR RETAINER		
12	OP05-8020	OPERATOR TRACK	ROTO	
13	LB06-7770	TIE BAR	ROTO	
14	LM08-7520-00	LOCK	ROTO	
15	LB05-1003-51	KEEPER	ROTO	
16	6066A	SNUBBER		
17		7/16" SCREN FRAME		
18		OPERATOR SCREWS FH #8 X 1"		
19		HINGE SCREWS FH #7 X 5/8"		
20		SNUBBER SCREWS FH #8 X 1"		
21		OPERATOR TRACK SCREWS		
22		KEEPER SCREWS FH #8 X 5/8"		
23		LOCK SCREWS PH #8 X 1"		
24		SNUBBER SCREWS # 8 X 1"		
25	995	STRUCTURAL SEALANT	DOW CORNING	
26	OP05-7810	HANDLE	ROTO	
27		TIE BAR GUIDE SCREW FH #8 X 1"		
28		SNUBBER SCREWS # 8 X 1"		

REVISIONS			
REV	DESCRIPTION	DATE	APPROVED

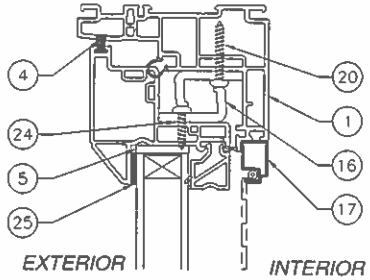

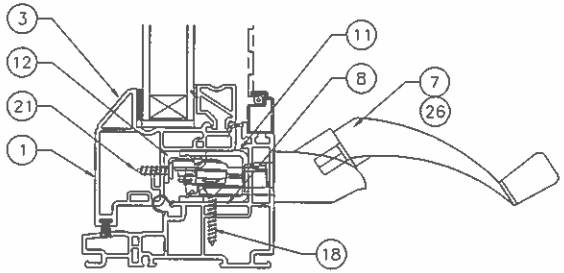

VERTICAL CROSS SECTION

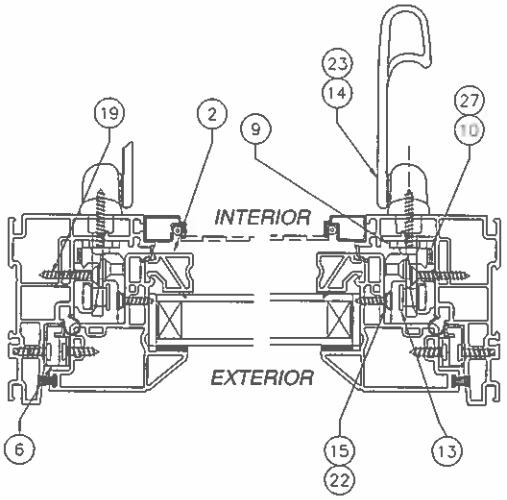

HORIZONTAL CROSS SECTION

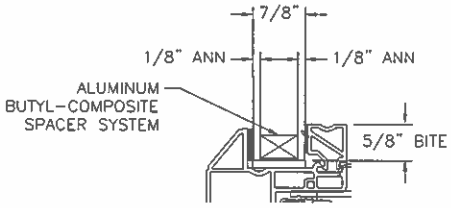

GLAZING DETAIL

SIGNED: 07/23/2013

KOLBE & KOLBE MILLWORK
1211 DEPOT ST
MANAWA, MI 54949

WINDQUEST V707 NON-IMPACT HP AWNING WINDOW
53 X 32
B.O.M. & CROSS SECTIONS

DRAWN:	DWG NO.	REV
V.L.	08-02167	–
SCALE NTS	DATE 07/23/13	SHEET 3 OF 6

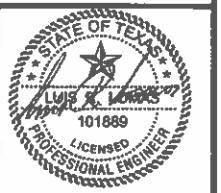

Luis R. Lomas P.E.
TX No.: 101889

REVISIONS			
REV	DESCRIPTION	DATE	APPROVED

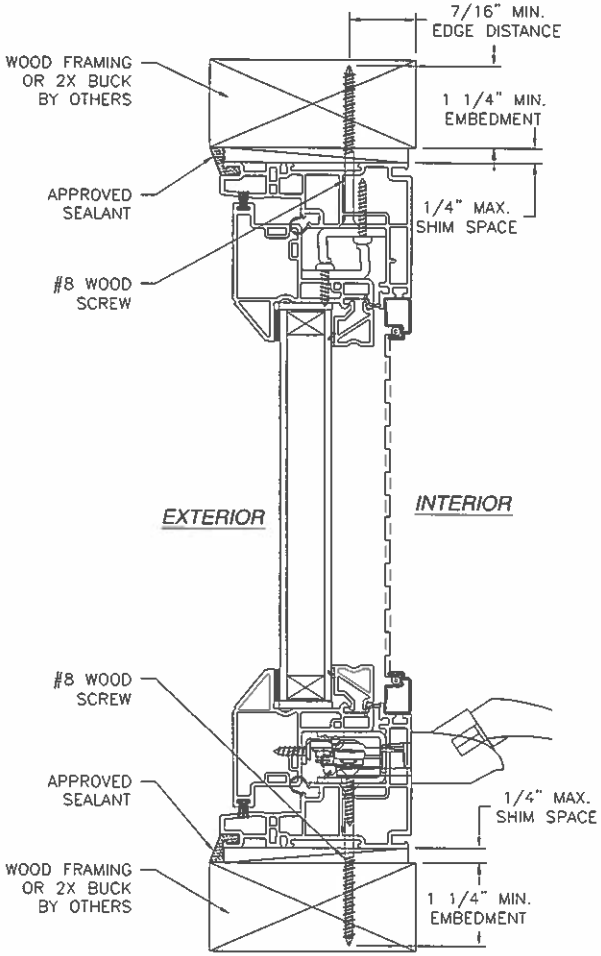

VERTICAL CROSS SECTION
WOOD FRAMING OR 2X BUCK INSTALLATION

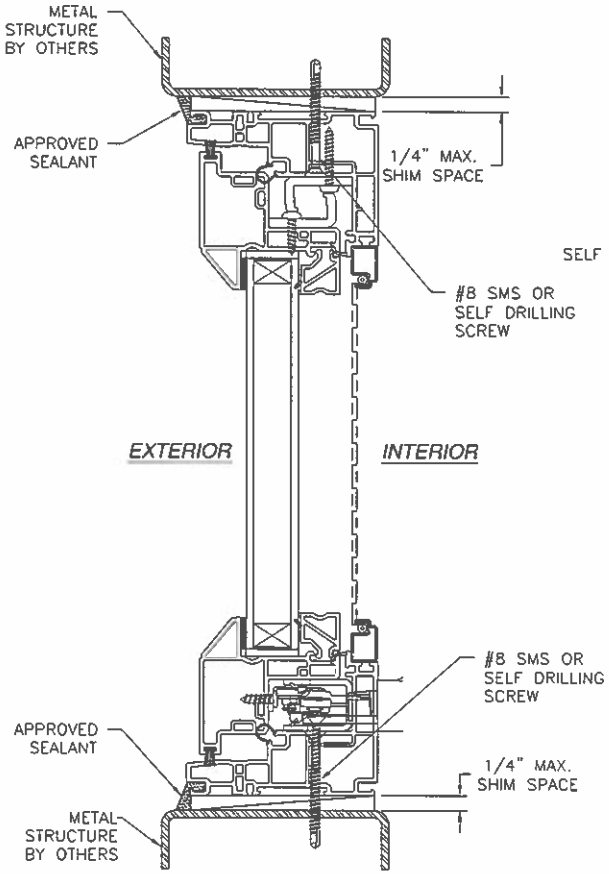

VERTICAL CROSS SECTION
METAL STRUCTURE INSTALLATION

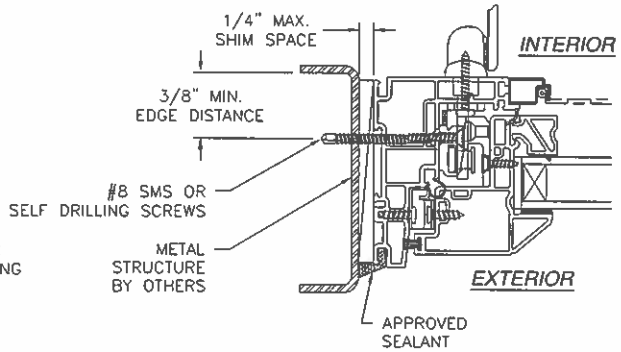

JAMB INSTALLATION DETAIL
METAL STRUCTURE INSTALLATION

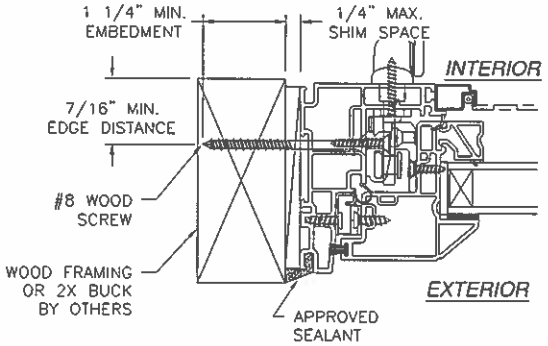

JAMB INSTALLATION DETAIL
WOOD FRAMING OR 2X BUCK INSTALLATION

NOTE:
INTERIOR AND EXTERIOR FINISHES, BY OTHERS. NOT SHOWN FOR CLARITY.

SIGNED: 07/23/2013

KOLBE & KOLBE MILLWORK
1211 DEPOT ST
MANAWA, MI 54949

WINDQUEST V707 NON-IMPACT HP AWNING WINDOW
53 X 32
INSTALLATION DETAILS

DRAWN: V.L.	DWG NO. 08-02167	REV -
SCALE NTS	DATE 07/23/13	SHEET 4 OF 6

STATE OF TEXAS
LUIS R. LOMAS
101889
LICENSED
PROFESSIONAL ENGINEER

Luis R. Lomas P.E.
TX No.: 101889

REVISIONS			
REV	DESCRIPTION	DATE	APPROVED

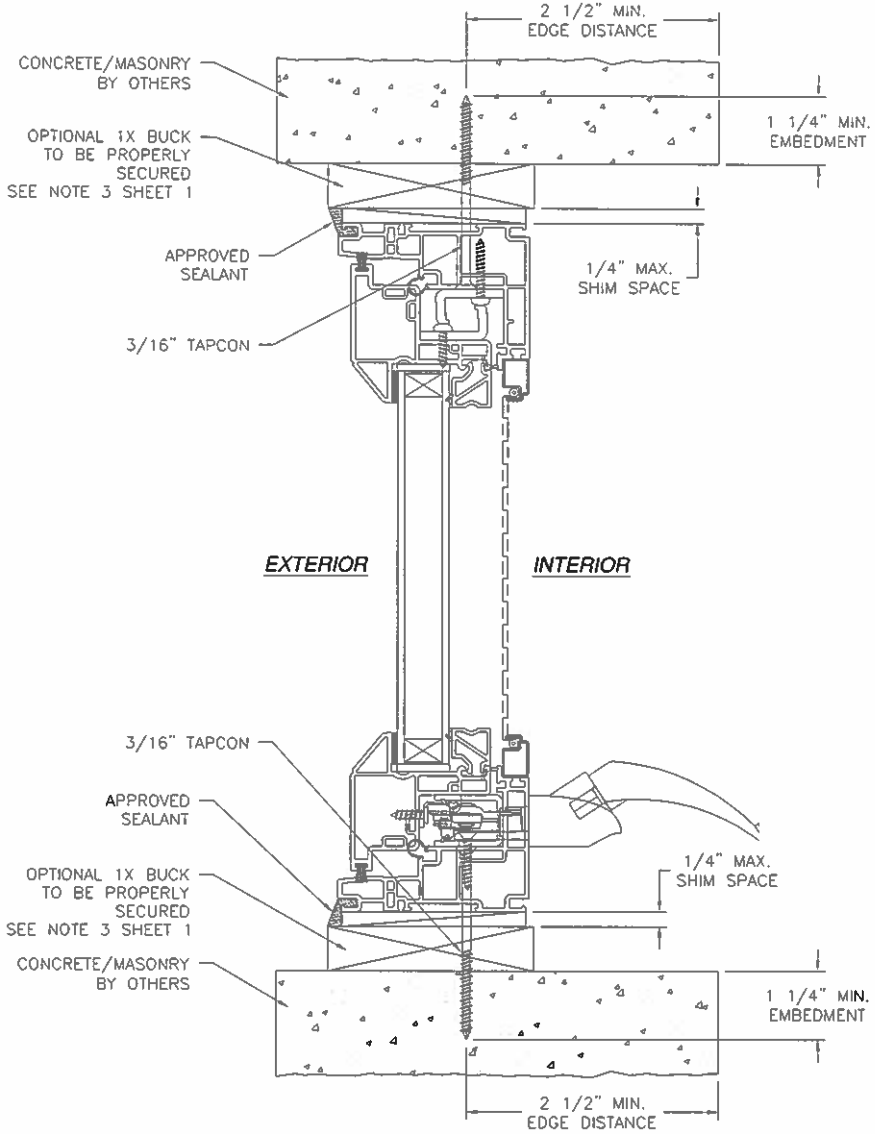

VERTICAL CROSS SECTION
CONCRETE/MASONRY INSTALLATION

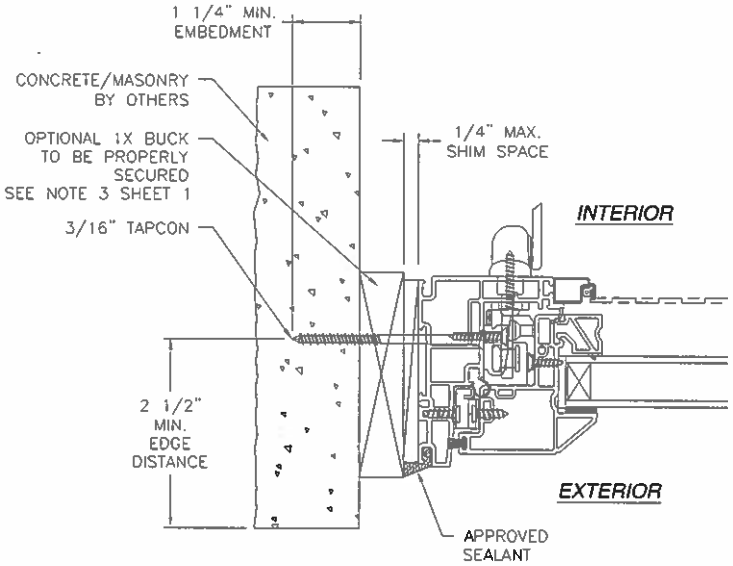

JAMB INSTALLATION DETAIL
CONCRETE/MASONRY INSTALLATION

NOTE:
INTERIOR AND EXTERIOR FINISHES, BY OTHERS, NOT SHOWN FOR CLARITY.

SIGNED: 07/23/2013

KOLBE & KOLBE MILLWORK
1211 DEPOT ST
MANAWA, MI 54949

WINDQUEST V707 NON-IMPACT HP AWNING WINDOW
53 X 32
INSTALLATION DETAILS

DRAWN:	DWG NO.	REV
V.L.	08-02167	-
SCALE NTS	DATE 07/23/13	SHEET 5 OF 6

STATE OF TEXAS
LUIS R. LOMAS
101889
LICENSED
PROFESSIONAL ENGINEER

Luis R. Lomas P.E.
TX No.: 101889

REVISIONS			
REV	DESCRIPTION	DATE	APPROVED

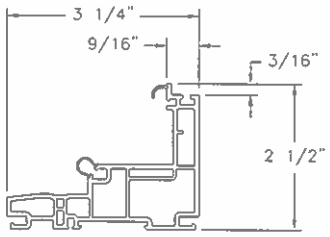

1 **FRAME**
VINYL PVC .071 THICK

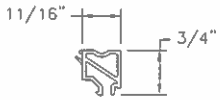

2 **GLAZING BEAD**
VINYL PVC .059 THICK

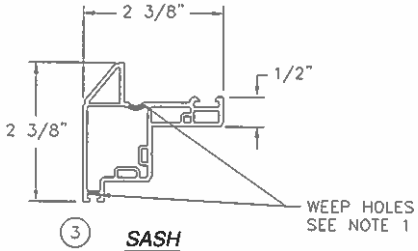

3 **SASH**
VINYL PVC .071 THICK

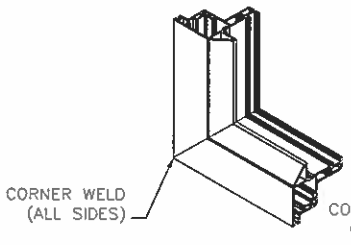

SASH CORNER CONSTRUCTION

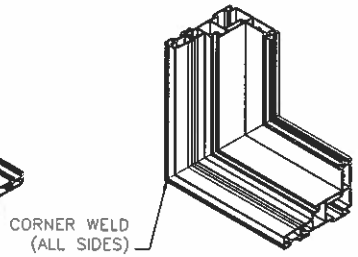

FRAME CORNER CONSTRUCTION

SIGNED: 07/23/2013

KOLBE & KOLBE MILLWORK
1211 DEPOT ST
MANAWA, MI 54949

WINDQUEST V707 NON-IMPACT HP AWNING WINDOW
53 X 32
COMPONENTS & CORNER CONSTRUCTION

DRAWN: V.L.	DWG NO. 08-02167	REV –
SCALE NTS	DATE 07/23/13	SHEET 6 OF 6

STATE OF TEXAS
Luis R. Lomas
101889
LICENSED
PROFESSIONAL ENGINEER

Luis R. Lomas P.E.
TX No.: 101889