ANDERSEN CORPORATION

400 SERIES SPECIALTY DIRECT SET - (IMPACT)

INSTALLATION NOTES:

1. ONE (1) INSTALLATION ANCHOR IS REQUIRED AT EACH ANCHOR LOCATION SHOWN, UNLESS OTHERWISE STATED.
2. THE NUMBER OF INSTALLATION ANCHORS DEPICTED IS THE MINIMUM NUMBER OF ANCHORS TO BE USED FOR PRODUCT INSTALLATION.
3. INSTALL INDIVIDUAL INSTALLATION ANCHORS WITHIN A TOLERANCE OF ±1/2 INCH OF THE DEPICTED LOCATION IN THE ANCHOR LAYOUT DETAIL (I.E., WITHOUT CONSIDERATION OF TOLERANCES). TOLERANCES ARE NOT CUMULATIVE FROM ONE INSTALLATION ANCHOR TO THE NEXT.
4. INSTALLATION CLIP: FOR INSTALLATION THROUGH 1X BUCK TO CONCRETE/MASONRY, OR DIRECTLY INTO CONCRETE/MASONRY, USE ONE (1) 3/16 INCH ITW TAPCON PER INSTALLATION CLIP OF SUFFICIENT LENGTH TO ACHIEVE *1 1/4* INCH MINIMUM EMBEDMENT.
5. INSTALLATION CLIP: FOR INSTALLATION INTO 2X BUCK USE TWO (2) #8 OR ONE (1) *#12 WOOD SCREWS* PER INSTALLATION CLIP OF SUFFICIENT LENGTH TO ACHIEVE *1 1/2* INCH MINIMUM EMBEDMENT INTO WOOD SUBSTRATE.
6. INSTALLATION CLIP: FOR INSTALLATION THROUGH METAL STRUCTURE USE TWO (2) #8 SELF-TAPPING SCREWS PER INSTALLATION CLIP OF SUFFICIENT LENGTH TO ACHIEVE *3 THREADS* MINIMUM PENETRATION BEYOND METAL STRUCTURE FRAME SUBSTRATE.
7. FASTENER THROUGH FRAME: FOR INSTALLATION OF SPRINGLINE UNITS ONLY, INTO 2X BUCK USE ONE (1) #10 WOOD SCREW OF SUFFICIENT LENGTH TO ACHIEVE *1 1/2* INCH MINIMUM EMBEDMENT INTO WOOD SUBSTRATE.
8. FASTENER THROUGH FRAME: FOR INSTALLATION OF SPRINGLINE UNITS ONLY, THROUGH 1X BUCK TO CONCRETE/MASONRY, OR DIRECTLY INTO CONCRETE/MASONRY, USE ONE (1) 3/16 INCH ITW TAPCON OF SUFFICIENT LENGTH TO ACHIEVE *1 1/4* INCH MINIMUM EMBEDMENT.
9. FASTENER THROUGH FRAME: FOR INSTALLATION OF SPRINGLINE UNITS ONLY, THROUGH METAL STRUCTURE USE ONE (1) *#10* SELF-TAPPING SCREWS PER INSTALLATION CLIP OF SUFFICIENT LENGTH TO ACHIEVE *3 THREADS* MINIMUM PENETRATION BEYOND METAL STRUCTURE.
10. MINIMUM EMBEDMENT AND EDGE DISTANCE EXCLUDE WALL FINISHES, INCLUDING BUT NOT LIMITED TO STUCCO, FOAM, BRICK VENEER, AND SIDING.
11. INSTALLATION ANCHORS AND ASSOCIATED HARDWARE MUST BE MADE OF CORROSION RESISTANT MATERIAL OR HAVE A CORROSION RESISTANT COATING.
12. FOR HOLLOW BLOCK AND GROUT FILLED BLOCK, DO NOT INSTALL INSTALLATION ANCHORS INTO MORTAR JOINTS. EDGE DISTANCE IS MEASURED FROM FREE EDGE OF BLOCK OR EDGE OF MORTAR JOINT INTO FACE SHELL OF BLOCK.
13. INSTALLATION ANCHORS SHALL BE INSTALLED IN ACCORDANCE WITH ANCHOR MANUFACTURER'S INSTALLATION INSTRUCTIONS, AND ANCHORS SHALL NOT BE USED IN SUBSTRATES WITH STRENGTHS LESS THAN THE MINIMUM STRENGTH SPECIFIED BY THE ANCHOR MANUFACTURER.
14. INSTALLATION ANCHOR CAPACITIES FOR PRODUCTS HEREIN ARE BASED ON SUBSTRATE MATERIALS WITH THE FOLLOWING PROPERTIES:
    A. WOOD - MINIMUM SPECIFIC GRAVITY OF *0.42*.
    B. CONCRETE -MINIMUM COMPRESSIVE STRENGTH OF *3192 PSI*.
    C. MASONRY - STRENGTH CONFORMANCE TO ASTM C-90,.
    D. STEEL - MINIMUM YIELD STRENGTH OF 33 KSI. MINIMUM WALL THICKNESS OF 33 MILS (20 GAUGE).
    E. ALUMINUM - ALUMINUM - 1/8" MINIMUM THICKNESS (6063-T5).

GENERAL NOTES:

1. THE PRODUCT SHOWN HEREIN IS DESIGNED AND MANUFACTURED TO COMPLY WITH THE 2006 INTERNATIONAL BUILDING CODE (IBC) AND INTERNATIONAL RESIDENTIAL CODE (IRC) WITH 2006 TEXAS REVISIONS, EFFECTIVE JANUARY 1, 2008 AND HAS BEEN EVALUATED ACCORDING TO THE FOLLOWING:
   - AAMA/WDMA/CSA 101/ I.S.2/A440-05/08
   - ASTM E1886-02/05
   - ASTM E1996-02/05
2. ADEQUACY OF THE EXISTING STRUCTURAL CONCRETE/MASONRY, 2X AND METAL STUD FRAMING AS A MAIN WIND FORCE RESISTING SYSTEM CAPABLE OF WITHSTANDING AND TRANSFERRING APPLIED PRODUCT LOADS TO THE FOUNDATION IS THE RESPONSIBILITY OF THE ENGINEER OR ARCHITECT OF RECORD FOR THE PROJECT OF INSTALLATION.
3. 1X AND 2X BUCKS (WHEN USED) SHALL BE DESIGNED AND ANCHORED TO PROPERLY TRANSFER ALL LOADS TO THE STRUCTURE. BUCK DESIGN AND INSTALLATION IS THE RESPONSIBILITY OF THE ENGINEER OR ARCHITECT OF RECORD FOR THE PROJECT OF INSTALLATION.
4. THE INSTALLATION DETAILS DESCRIBED HEREIN ARE GENERIC AND MAY NOT REFLECT ACTUAL CONDITIONS FOR A SPECIFIC SITE. IF SITE CONDITIONS CAUSE INSTALLATION TO DEVIATE FROM THE REQUIREMENTS DETAILED HEREIN, A LICENSED ENGINEER OR ARCHITECT SHALL PREPARE SITE SPECIFIC DOCUMENTS FOR USE WITH THIS DOCUMENT.
5. APPROVED IMPACT PROTECTIVE SYSTEM IS **NOT REQUIRED** TO PROTECT THIS PRODUCT IN AREAS REQUIRING IMPACT RESISTANCE.
6. WINDOW FRAME MATERIAL: PONDEROSA PINE OR EQUIVALENT
7. GLASS MEETS THE REQUIREMENTS OF ASTM E1300-04 GLASS CHARTS. SEE SHEET 7 FOR GLAZING DETAILS..
8. *DESIGNATIONS "X" AND "O" STAND FOR THE FOLLOWING:*
   X: OPERABLE PANEL
   O: FIXED PANEL

TABLE OF CONTENTS

SHEET	REVISION	SHEET DESCRIPTION
1	-	GENERAL & INSTALLATION NOTES
2	-	ELEVATIONS & ANCHOR LAYOUTS
3	-	ELEVATION & ANCHOR LAYOUT
4	-	QUALIFIED SHAPES & ANCHOR SCHEDULE
5	-	VERTICAL SECTIONS
6	-	HORIZONTAL SECTIONS
7	-	BOM, COMPONENTS, CONST. NOTES, GLAZING DETAILS

DESIGN PRESSURE RATING

INSTALLATION	DESIGN PRESSURE	MISSILE IMPACT RATING
INSTALLATION CLIP	+70.0 / -70.0 PSF	LARGE & SMALL MISSILE IMPACT RATED
FASTENER THROUGH FRAME	+70.0 / -70.0 PSF	

Andersen AW WINDOWS • DOORS
100 FOURTH AVE N NORTH
BAYPORT, MN 55003-1096
PH: (651) 264-5150 FX: (651) 264-5485

TITLE: 400 SERIES SPECIALTY DIRECT SET -(IMPACT) GENERAL & INSTALLATIONS NOTES

PREPARED BY:
BUILDING DROPS, INC.
398 E. DANIA BEACH BLVD. #338
DANIA BEACH, FL 33004
PH: (954) 399-8478 FX: (954) 744-4738

REVISIONS

NO.	DESCRIPTION	BY	DATE

STATE OF TEXAS
ALEXIS SPYROU
102957
LICENSED
PROFESSIONAL ENGINEER
TEXAS REG. No. F-2957
398 E. DANIA BEACH BLVD. #338
DANIA BEACH, FL 33004

DATE: 09.06.12	DWN BY: MSS	CHK BY: HN	SCALE: NTS

DWG #: AWD058

SHEET: 1 OF 7

s:\projects\andersen windows\rdi-12-0631 (rdi submittal - windows and doors)\awd010-awd058 flex-arch-spring 400 imi\dwg\awd058 edit\awd058 edit\awd058 - 400 series specialty direct set impact (2).dwg

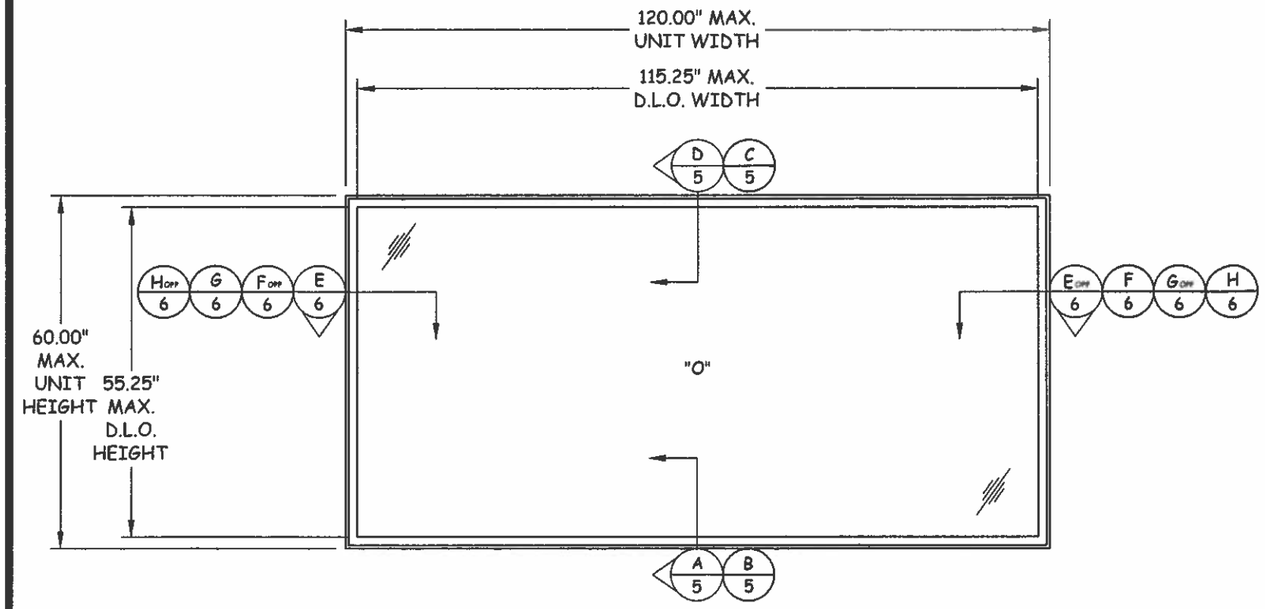

ELEVATION

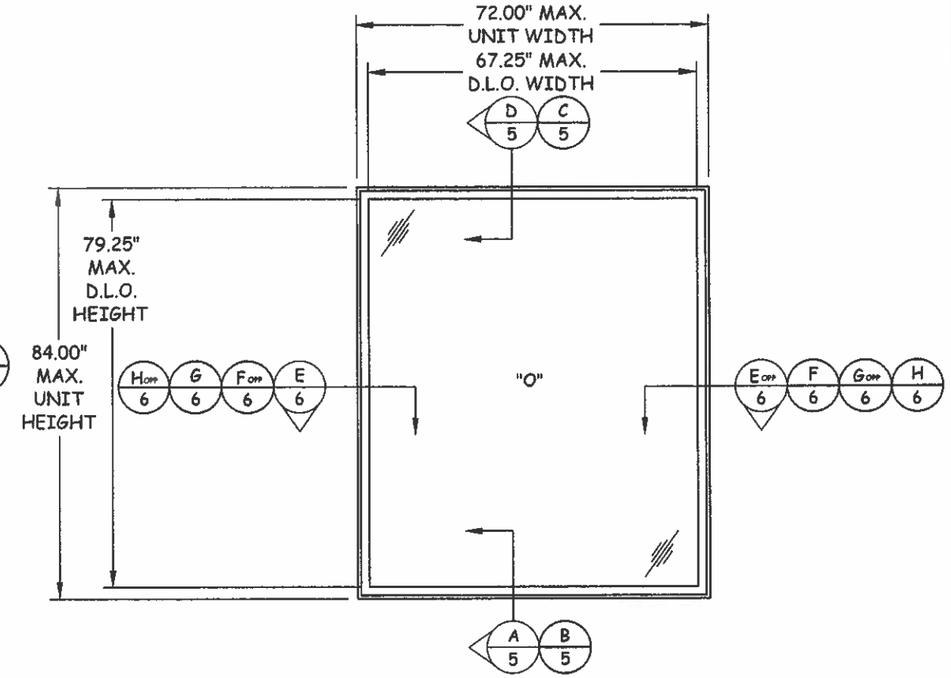

ELEVATION

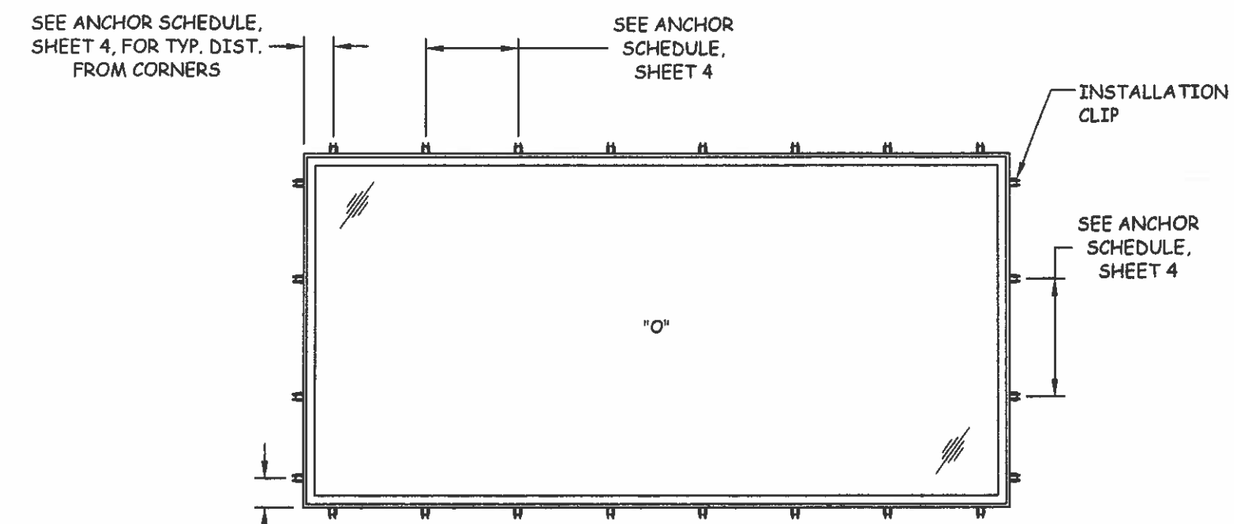

ANCHOR LAYOUT
INSTALLATION CLIP

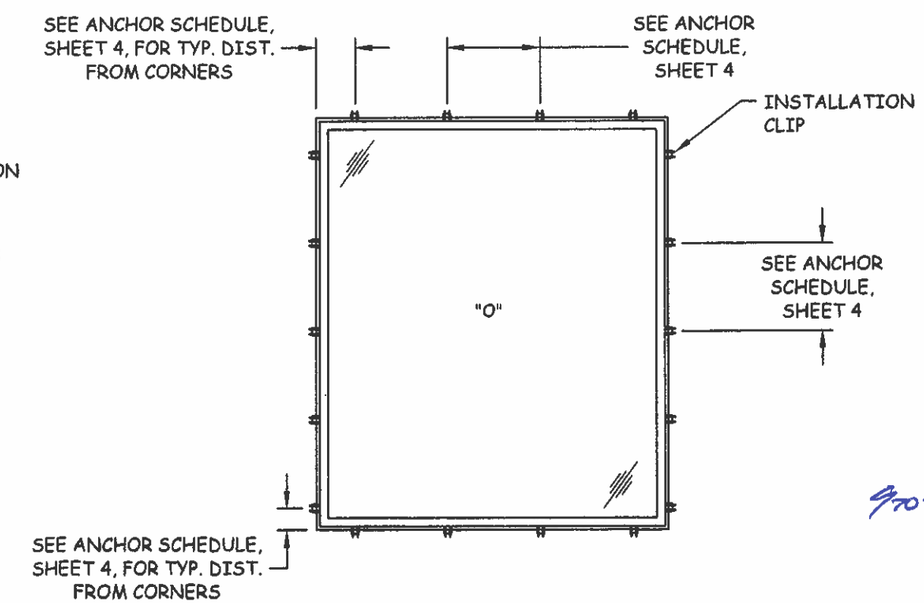

ANCHOR LAYOUT
INSTALLATION CLIP

Andersen AW WINDOWS • DOORS
100 FOURTH AVE N NORTH
BAYPORT, MN 55003-1096
PH: (651) 264-5150 FX: (651) 264-5485

TITLE: 400 SERIES SPECIALTY DIRECT SET -(IMPACT) ELEVATIONS & ANCHOR LAYOUTS

PREPARED BY:
BUILDING DROPS, INC.
398 E. DANIA BEACH BLVD. #338
DANIA BEACH, FL 33004
PH: (954) 399-8478 FX: (954) 744-4738

REVISIONS

NO.	DESCRIPTION	BY	DATE

STATE OF TEXAS
ALEXIS SPYROU
102957
LICENSED
PROFESSIONAL ENGINEER
TEXAS REG. NO. 102957
398 E. DANIA BEACH BLVD. #338
DANIA BEACH, FL 33004

9/07/12

DATE: 09.06.12	DWN BY: MSS	CHK BY: HN	SCALE: NTS

DWG #: AWD058

SHEET: 2 OF 7

s:\projects\andersen windows\tdi-12-0631 (tdi submittal - windows and doors)\awd010-awd058 flex-arch-spring 400 lm\dwg\awd058 2.dwg\awd058 set impact (2).dwg

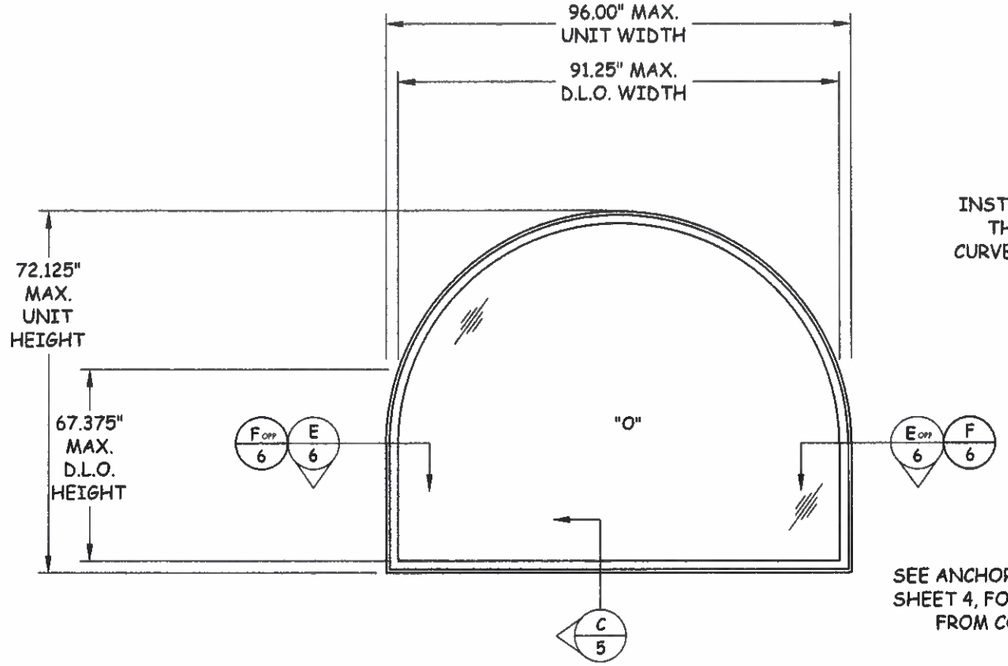

ELEVATION

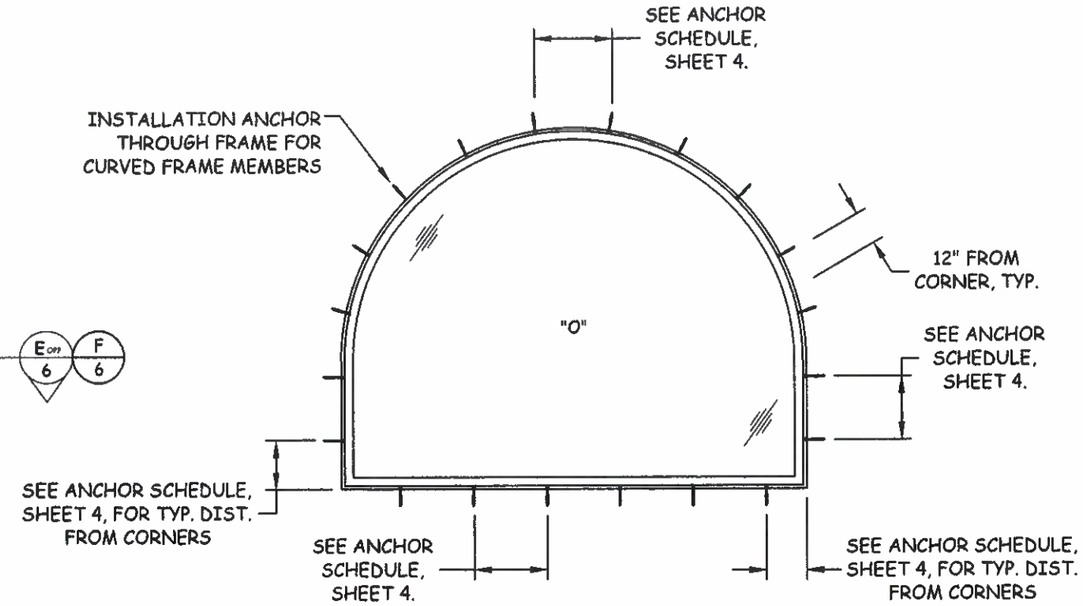

ANCHOR LAYOUT
FASTENER THROUGH FRAME

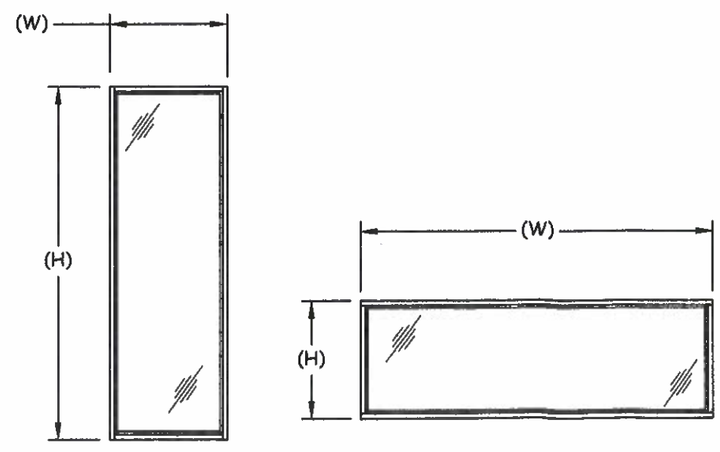

NOTE:
WINDOW WIDTH (W) AND HEIGHT (H) ARE INTERCHANGEABLE FOR ALL SIZES SHOWN HEREIN NOT TO EXCEED MAXIMUM TESTED SQUARE FOOT AREA. ANCHOR SPACING SHALL NOT EXCEED THOSE SHOWN FOR LONG OR SHORT LEG OF UNIT.

Andersen AW WINDOWS • DOORS
100 FOURTH AVE N NORTH
BAYPORT, MN 55003-1096
PH: (651) 264-5150 FX: (651) 264-5485

TITLE: 400 SERIES SPECIALTY DIRECT SET -(IMPACT)
ELEVATION & ANCHOR LAYOUT

PREPARED BY:
BUILDING DROPS, INC.
398 E. DANIA BEACH BLVD. #338
DANIA BEACH, FL 33004
PH: (954) 399-8478 FX: (954) 744-4738

REVISIONS

NO.	DESCRIPTION	BY	DATE

STATE OF TEXAS
ALEXIS SPYROU
102957
LICENSED
PROFESSIONAL ENGINEER
TEXAS REG. NO. 102957
398 E. DANIA BEACH BLVD. #338
DANIA BEACH, FL 33004

9/10/12

DATE: 09.06.12	DWN BY: MSS	CHK BY: HN	SCALE: NTS

DWG #: AWD058

SHEET: 3 OF 7

s:\projects\andersen windows\tdi-12-0631 (tdi submittal - windows and doors)\awd010-awd058 flex-arch-spring 400 im\dwg\awd058 2d\awd058.set impact (2).dwg

+70 / -70 PSF
FASTENER THROUGH FRAME OR INSTALLATION CLIP
ANCHOR SCHEDULE

QTY.	SUBSTRATE	ANCHOR TYPE	MIN. EMBEDMENT (in.)	MAX. O.C. SPACING		DIST. FROM CORNER
				HEAD & SILL	JAMBS	
2 PER CLIP	WOOD	#8 WOOD ANCHOR	1.50"	20"	20"	6"
1 PER CLIP	WOOD	#12 WOOD ANCHOR	1.50"	20"	20"	6"
1 PER CLIP	CONCRETE / MASONRY	3/16" ITW TAPCON	1.25"	16"	15"	6"
2 PER CLIP	METAL STRUCTURE	#8 SELF-TAPPING SCREW	3 THREADS	20"	20"	6"
1 (THROUGH FRAME)	WOOD	#10 WOOD ANCHOR	1.50"	15"	15"	12"
1 (THROUGH FRAME)	CONCRETE / MASONRY	3/16" ITW TAPCON	1.25"	15"	15"	12"
1 (THROUGH FRAME)	METAL STRUCTURE	#10 SELF-TAPPING SCREW	3 THREADS	13.75"	15"	12"

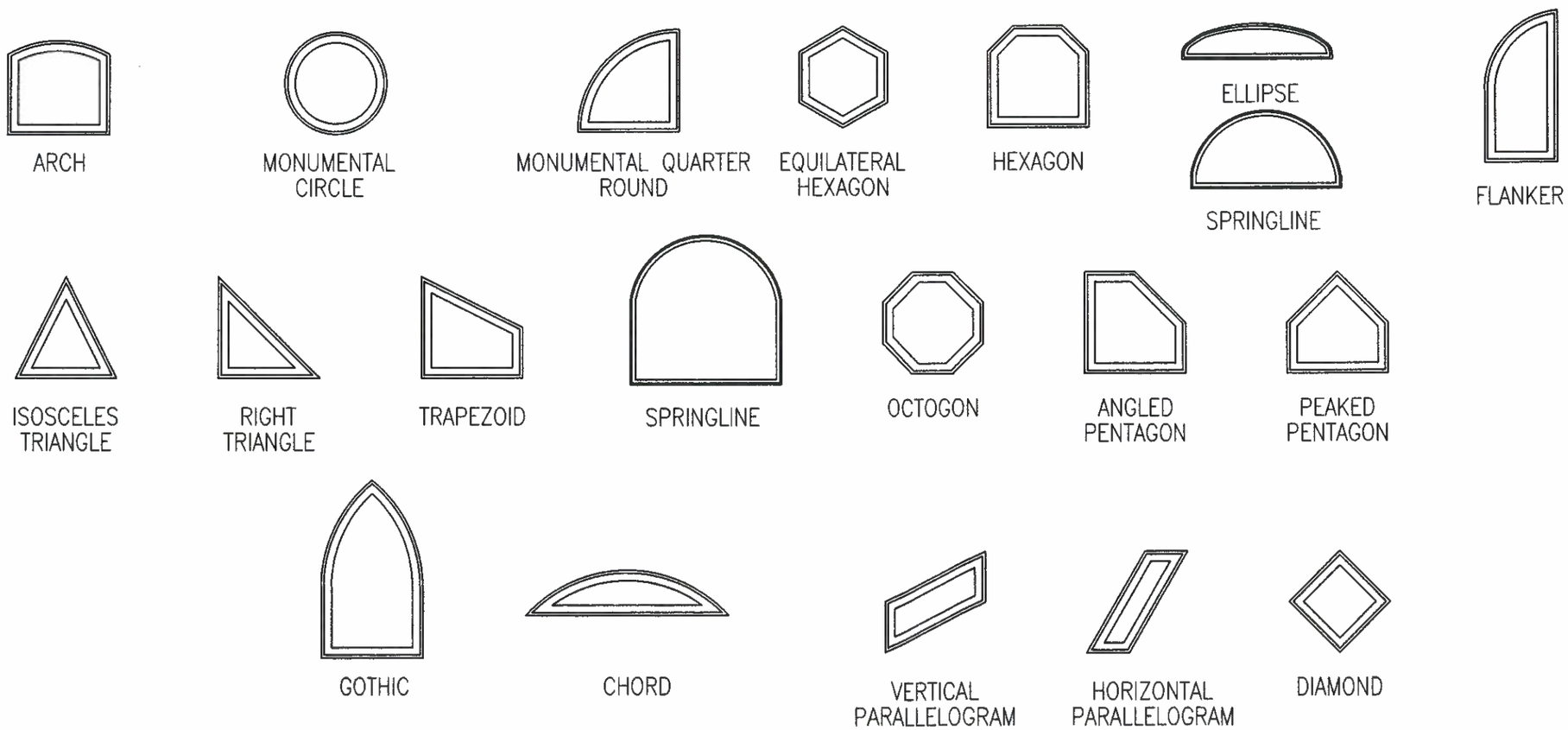

Andersen AW WINDOWS • DOORS
100 FOURTH AVE N NORTH
BAYPORT, MN 55003-1096
PH: (651) 264-5150 FX: (651) 264-5485

TITLE: 400 SERIES SPECIALTY DIRECT SET -(IMPACT)
SHAPES & ANCHOR SCHEDULE

PREPARED BY:
BUILDING DROPS, INC.
398 E. DANIA BEACH BLVD. #338
DANIA BEACH, FL 33004
PH: (954) 399-8478 FX: (954) 744-4738

REVISIONS

NO.	DESCRIPTION	BY	DATE

STATE OF TEXAS
ALEXIS SPYROU
102957
LICENSED
PROFESSIONAL ENGINEER

DATE: 09.06.12	DWN BY: MSS	CHK BY: HN	SCALE: NTS

DWG #: AWD058

SHEET: 4 OF 7

s:\projects\andersen windows\tdi-12-0631 (tdi submittal - windows and doors)\awd010-awd058 flex-arch-spring 400 lmi\dwg\awd058 2d\new set impact (2).dwg

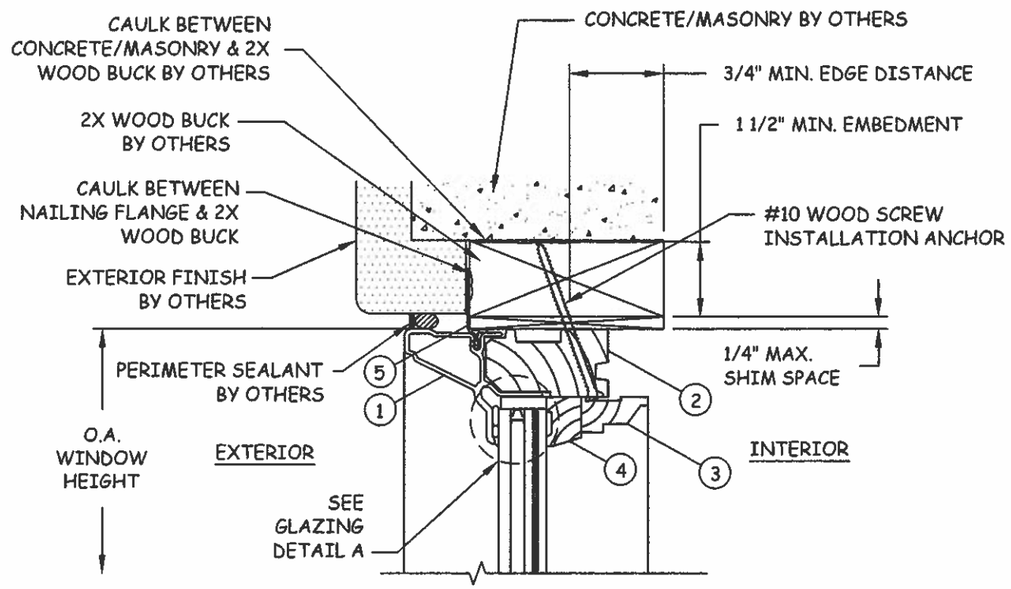

C/5 VERTICAL SECTION

HEAD - 2X WOOD FRAME
FASTENER THROUGH FRAME

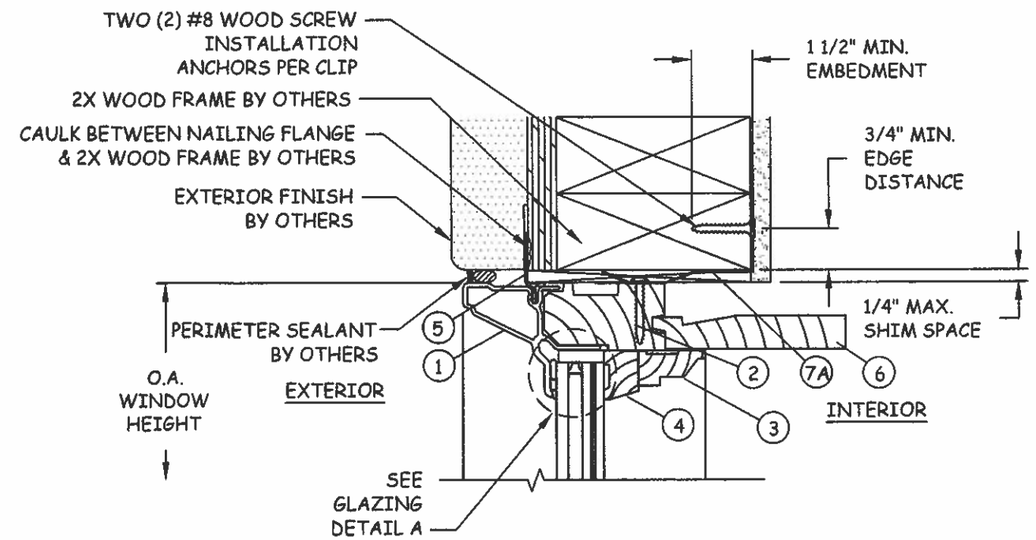

D/5 VERTICAL SECTION

HEAD - 2X WOOD FRAME
INSTALLATION CLIP

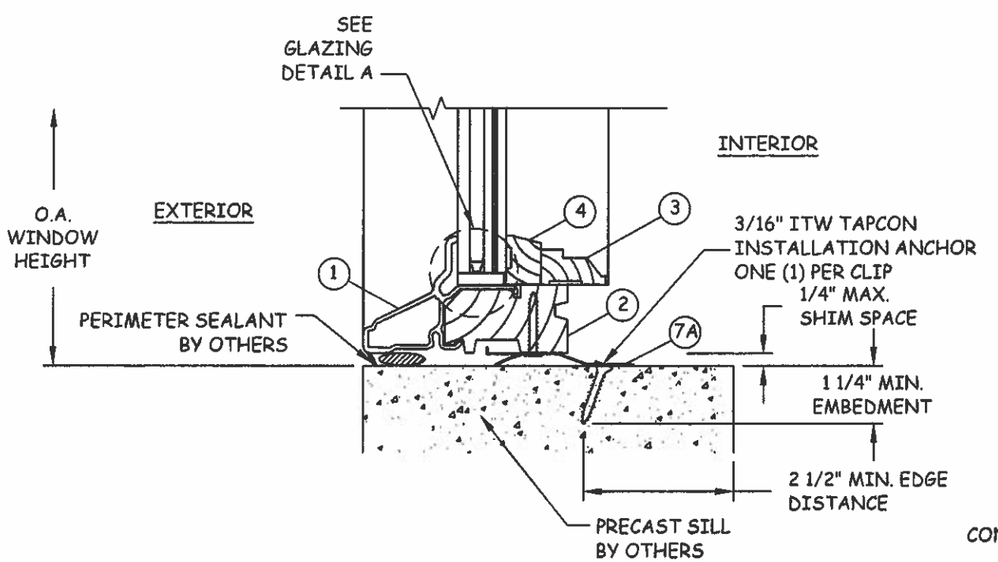

A/5 VERTICAL SECTION

SILL - CONCRETE/MASONRY
INSTALLATION CLIP

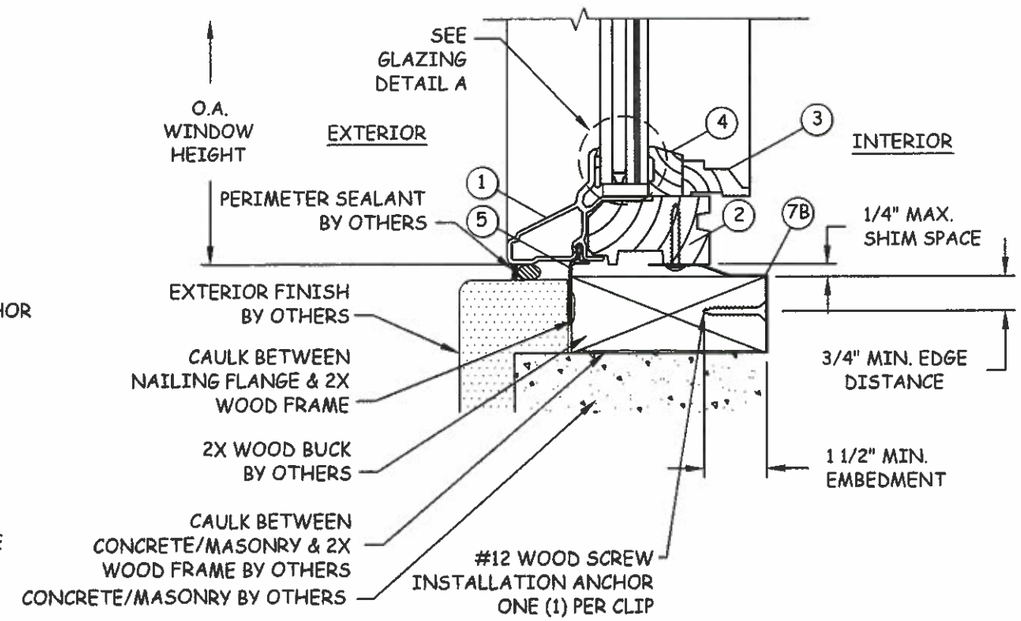

B/5 VERTICAL SECTION

SILL - 2X WOOD FRAME
INSTALLATION CLIP

Andersen AW WINDOWS • DOORS
100 FOURTH AVE N NORTH
BAYPORT, MN 55003-1096
PH: (651) 264-5150 FX: (651) 264-5485

TITLE: 400 SERIES SPECIALTY DIRECT SET -(IMPACT)

VERTICAL SECTIONS

PREPARED BY:
BUILDING DROPS, INC.
398 E. DANIA BEACH BLVD. #338
DANIA BEACH, FL 33004
PH: (954) 399-8478 FX: (954) 744-4738

REVISIONS

NO.	DESCRIPTION	BY	DATE

STATE OF TEXAS
ALEXIS SPYROU
102957
LICENSED
PROFESSIONAL ENGINEER

DATE: 09.06.12
DWN BY: MSS
CHK BY: HN
SCALE: NTS

DWG #: AWD058

SHEET: 5 OF 7

s:\projects\andersen windows\tdi-12-0631 (tdi submittal - windows and doors)\awd010-awd058 flex-arch-spring 400 lmi\dwgs\awd058 2.dwg set impact (2).dwg

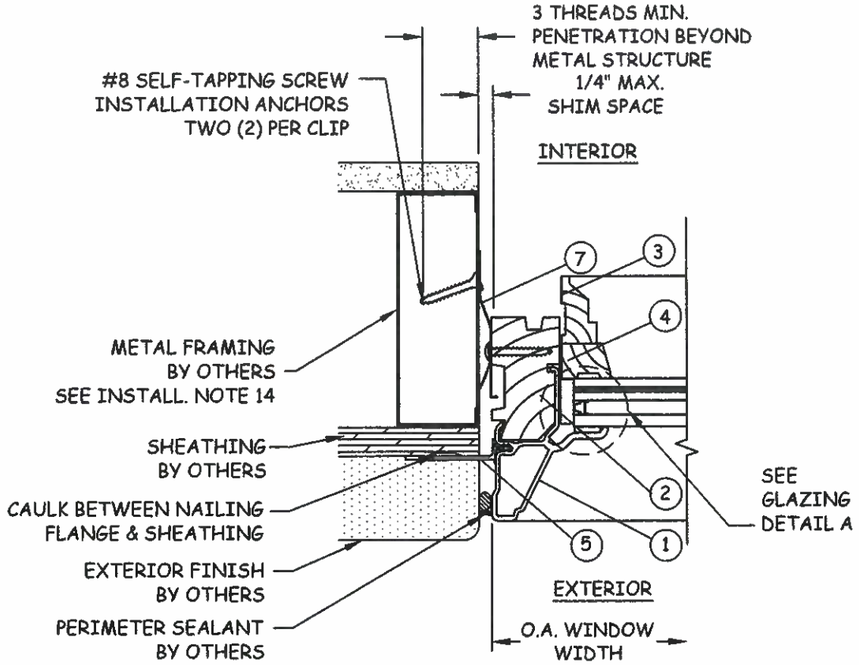

G/6 HORIZONTAL SECTION

JAMB - METAL FRAME
INSTALLATION CLIP

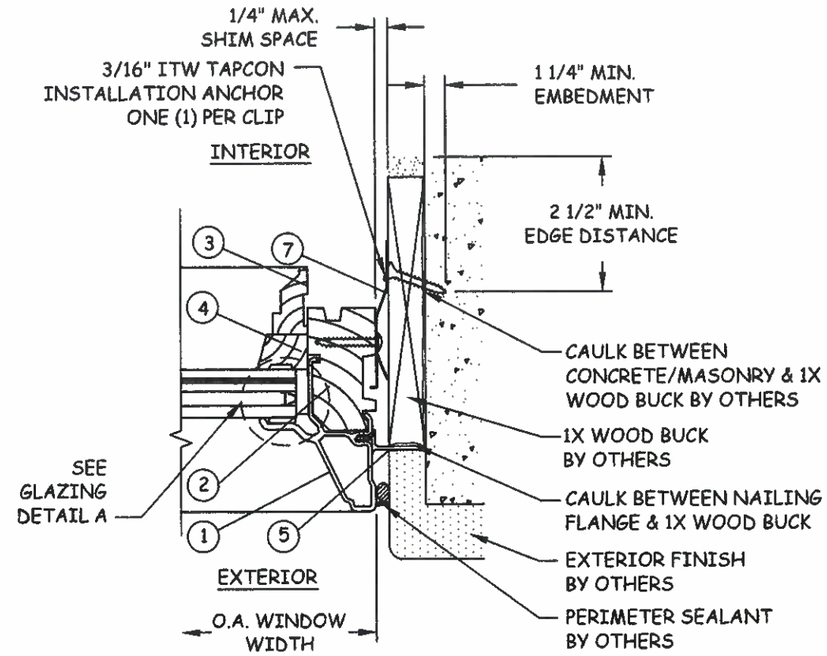

H/6 HORIZONTAL SECTION

JAMB - CONCRETE/MASONRY
INSTALLATION CLIP

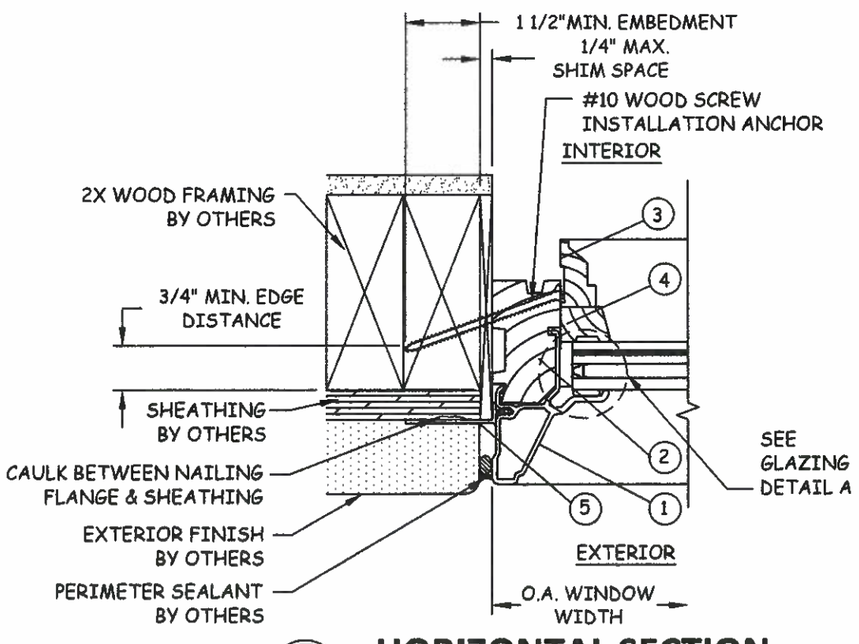

E/6 HORIZONTAL SECTION

JAMB - 2X WOOD FRAME
FASTENER THROUGH FRAME

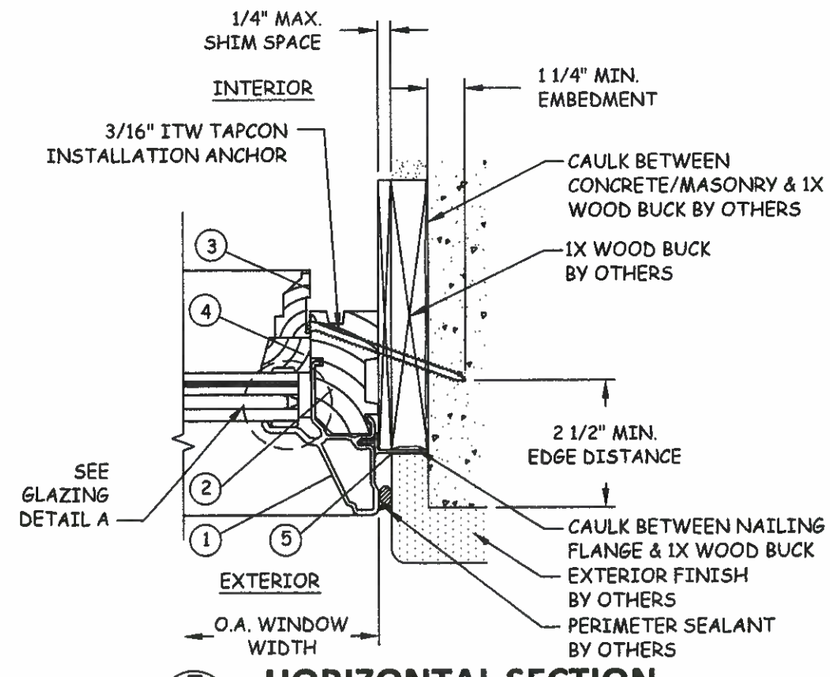

F/6 HORIZONTAL SECTION

JAMB - CONCRETE/MASONRY
FASTENER THROUGH FRAME

Andersen AW WINDOWS • DOORS
100 FOURTH AVE N NORTH
BAYPORT, MN 55003-1096
PH: (651) 264-5150 FX: (651) 264-5485

TITLE: 400 SERIES SPECIALTY DIRECT SET -(IMPACT)
HORIZONTAL SECTIONS

PREPARED BY:
BUILDING DROPS, INC.
398 E. DANIA BEACH BLVD. #338
DANIA BEACH, FL 33004
PH: (954) 399-8478 FX: (954) 744-4738

REVISIONS

NO.	DESCRIPTION	BY	DATE

STATE OF TEXAS
ALEXIS SPYROU
102957
LICENSED
PROFESSIONAL ENGINEER

DATE: 09.06.12	DWN BY: MSS	CHK BY: HN	SCALE: NTS

DWG #: AWD058

SHEET: 6 OF 7

s:\projects\andersen windows\tdi-12-0631 (tdi submittal - windows and doors)\awd010-awd058 flex-arch-spring 400 lm\dwg\awd058 2d\awd058set impact (2).dwg

BILL OF MATERIALS				
NO.	PART NUMBER	DESCRIPTION	MATERIAL	MANUFACTURERS
1	--	EXTERIOR CLADDING	FIBERGLASS/ALUMINUM	ANDERSEN CORPORATION
2	--	FRAME	WOOD/LVL	ANDERSEN CORPORATION
3	--	TRIM STOP	WOOD	ANDERSEN CORPORATION
4	--	GLASS STOP	WOOD	ANDERSEN CORPORATION
5	--	FLANGE	PVC	ANDERSEN CORPORATION
6	--	EXTENSION JAMB	WOOD	ANDERSEN CORPORATION
7A	--	INSTALLATION CLIP	STAINLESS STEEL	ANDERSEN CORPORATION
7B	--	INSTALLATION CLIP	STAINLESS STEEL	ANDERSEN CORPORATION

NOTE: ALL WOOD TO BE PONDEROSA PINE OR EQUAL

1 EXTERIOR FRAME
FIBERGLASS/ALUMINUM
SEE CONST. NOTE 1

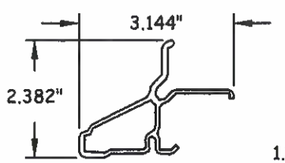

2 FRAME
WOOD/LVL
SEE CONST. NOTE 2

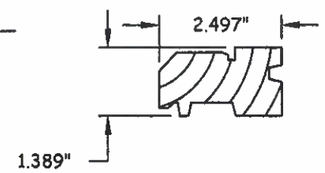

3 TRIM STOP
WOOD

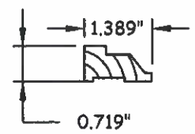

4 GLASS STOP
WOOD
SEE CONST. NOTE 4

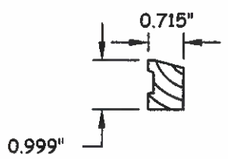

5 FLANGE
PVC

6 EXTENSION JAMB
WOOD

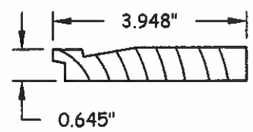

7A INSTALLATION CLIPS
304 SS
SEE CONST. NOTE 3

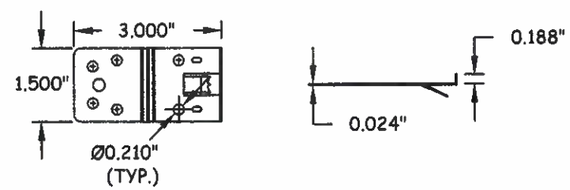

7B INSTALLATION CLIPS
304 SS
SEE CONST. NOTE 3

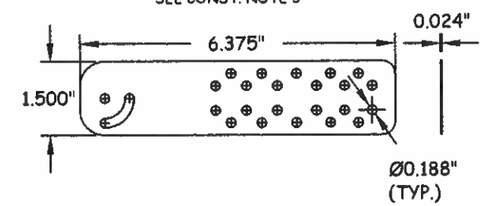

CONSTRUCTION NOTES:

1) FIBERGLASS/ALUMINUM CLADDING IS USED FOR STRAIGHT FRAME MEMBERS AND ALUMINUM CLADDING IS USED WITH CURVED FRAME MEMBERS.
2) SOLID WOOD FRAMES ARE USED FOR STRAIGHT MEMBERS AND LVL FRAMES ARE USED FOR CURVED MEMBERS.
3) INSTALLATION CLIPS SHALL BE ATTACHED TO FRAME WITH TWO (2) #8 X 1-1/4" SS SCREWS.
4) INTERIOR GLASS STOP SHALL BE ATTACHED TO THE FRAME WITH 18 GA. X 2" BRAD NAILS, 2" FROM CORNERS AND 4" O.C. THEREAFTER.

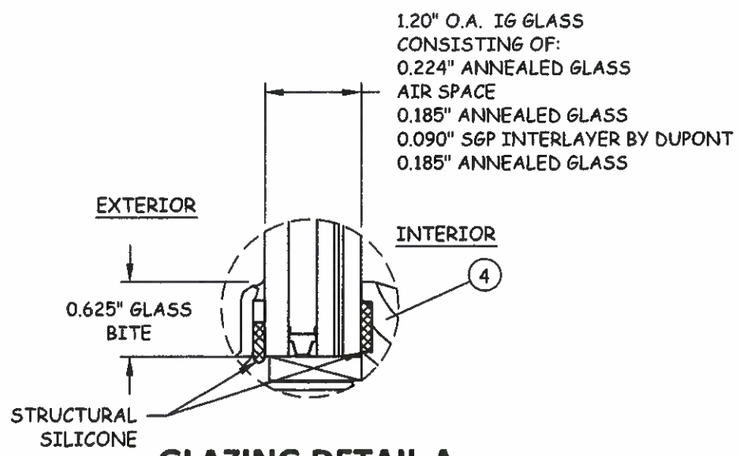

GLAZING DETAIL A

Andersen AW WINDOWS • DOORS
100 FOURTH AVE N NORTH
BAYPORT, MN 55003-1096
PH: (651) 264-5150 FX: (651) 264-5485

TITLE: 400 SERIES SPECIALTY DIRECT SET -(IMPACT)
BOM, COMPONENTS, CONST. NOTES & GLAZING DET.

PREPARED BY:
BUILDING DROPS, INC.
398 E. DANIA BEACH BLVD. #338
DANIA BEACH, FL 33004
PH: (954) 399-8478 FX: (954) 744-4738

REVISIONS

NO.	DESCRIPTION	BY	DATE

STATE OF FLORIDA
ALEXIS SPYROU
102957
LICENSED
PROFESSIONAL ENGINEER
ALEXIS P. SPYROU, P.E. LICENSE NO. 102957
398 E. DANIA BEACH BLVD. #338
DANIA BEACH, FL 33004

DATE: 09.06.12	DWN BY: MSS	CHK BY: HN	SCALE: NTS

DWG #: AWD058

SHEET: 7 OF 7