REVISIONS			
REV	DESCRIPTION	DATE	APPROVED

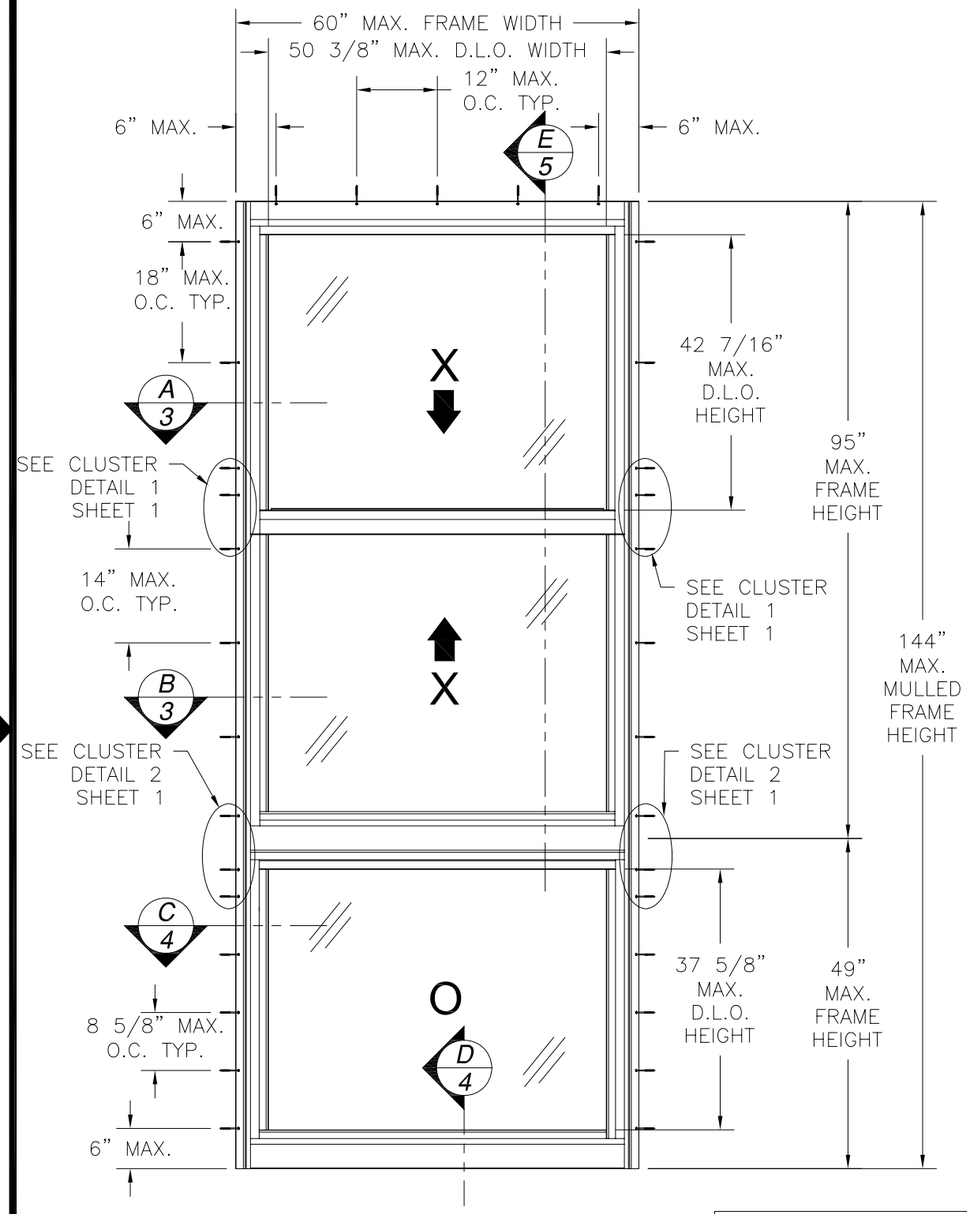

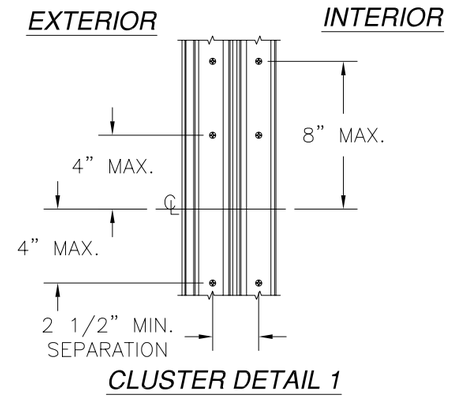

CLUSTER DETAIL 1

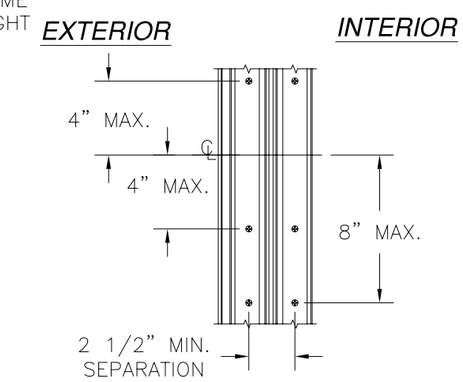

CLUSTER DETAIL 2

NOTES:

1) THE PRODUCT SHOWN HEREIN IS DESIGNED AND MANUFACTURED TO COMPLY WITH REQUIREMENTS OF THE 2006 INTERNATIONAL BUILDING CODE AND 2006 INTERNATIONAL RESIDENTIAL CODE WITH TEXAS STATE MODIFICATIONS.
2) WOOD FRAMING, 2X BACKED STEEL FRAMING AND MASONRY OPENING TO BE DESIGNED AND ANCHORED TO PROPERLY TRANSFER ALL LOADS TO STRUCTURE. FRAMING AND MASONRY OPENING IS THE RESPONSIBILITY OF THE ARCHITECT OR ENGINEER OF RECORD.
3) 1X BUCK OVER MASONRY/CONCRETE IS OPTIONAL. WHERE 1X BUCK IS NOT USED DISSIMILAR MATERIALS MUST BE SEPARATED WITH APPROVED COATING OR MEMBRANE. SEPARATION OF DISSIMILAR MATERIALS IS THE RESPONSIBILITY OF THE ARCHITECT OR ENGINEER OF RECORD.
4) ALLOWABLE STRESS INCREASE OF 1/3 WAS NOT USED IN THE DESIGN OF THE PRODUCT SHOWN HEREIN. WIND LOAD DURATION FACTOR Cd=1.6 WAS USED FOR WOOD ANCHOR CALCULATIONS.
5) FIXED AND DOUBLE HUNG SASH AND FRAME MATERIAL: THERMALLY BROKEN EXTRUDED ALUMINUM 6063–T6.
6) UNITS MUST BE GLAZED PER ASTM E1300.
7) APPROVED IMPACT PROTECTIVE SYSTEM IS REQUIRED FOR THIS PRODUCT IN WIND BORNE DEBRIS REGIONS.
8) SHIM AS REQUIRED AT EACH INSTALLATION ANCHOR WITH LOAD BEARING SHIM. SHIM WHERE SPACE OF 1/16" OR GREATER OCCURS. MAXIMUM ALLOWABLE SHIM STACK TO BE 1/4".
9) FOR ANCHORING INTO MASONRY/CONCRETE USE 3/16" ITW OR 3/16" POWERS TAPPER TAPCONS WITH SUFFICIENT LENGTH TO ACHIEVE A 1 1/4" MINIMUM EMBEDMENT INTO SUBSTRATE WITH 2 5/8'' MINIMUM EDGE DISTANCE. LOCATE ANCHORS AS SHOWN IN ELEVATIONS AND INSTALLATION DETAILS.
10) FOR ANCHORING INTO 2X WOOD FRAMING, 2X BUCK OR 2X BACKED 20GA. STEEL FRAMING USE #10 WOOD SCREW WITH SUFFICIENT LENGTH TO ACHIEVE A 1 3/8" MINIMUM EMBEDMENT INTO SUBSTRATE WITH 3/4" MINIMUM EDGE DISTANCE. LOCATE ANCHORS AS SHOWN IN ELEVATIONS AND INSTALLATION DETAILS.
11) ALL FASTENERS TO BE CORROSION RESISTANT.
12) INSTALLATION ANCHORS SHALL BE INSTALLED IN ACCORDANCE WITH ANCHOR MANUFACTURER'S INSTALLATION INSTRUCTIONS, AND ANCHORS SHALL NOT BE USED IN SUBSTRATES WITH STRENGTHS LESS THAN THE MINIMUM STRENGTH SPECIFIED BELOW:
    A. WOOD – MINIMUM SPECIFIC GRAVITY OF G=0.49
    B. CONCRETE – MINIMUM COMPRESSIVE STRENGTH OF 3,192 PSI.
    C. MASONRY – STRENGTH CONFORMANCE TO ASTM C–90, GRADE N, TYPE 1 (OR GREATER).
    D. STEEL FRAMING: 2X BACKED 20GA. (.039" MIN.) STEEL FRAMING.

SIGNED: 01/19/2012

SERIES 9043 THERMALLY BROKEN ALUMINUM WINDOW WALL

EXTERIOR VIEW

DESIGN PRESSURE RATING	IMPACT RATING
+90.0 PSF -150.0 PSF	NONE

TABLE OF CONTENTS

SHEET NO.	DESCRIPTION
1 – 2	ELEVATION, ANCHORING LAYOUT AND NOTES
3	BILL OF MATERIALS, CROSS SECTIONS AND NOTES
4	BILL OF MATERIALS AND CROSS SECTIONS
5	CROSS SECTIONS
6 – 11	INSTALLATION DETAILS
12 – 13	COMPONENTS

WinDoor INCORPORATED
7500 AMSTERDAM DRIVE
ORLANDO, FL 32832
Phone: 407.481.8400
Fax: 407.481.0505
www.windoorinc.com

SERIES 9043 THERMALLY BROKEN ALUMINUM WINDOW WALL – NON–IMPACT
ELEVATION, ANCHORING LAYOUT AND NOTES

DRAWN:	DWG NO.	REV
TJH	08–01146	–

SCALE	DATE	SHEET
NTS	01/07/11	1 OF 13

Luis R. Lomas P.E.
Texas No. 101889

REVISIONS			
REV	DESCRIPTION	DATE	APPROVED

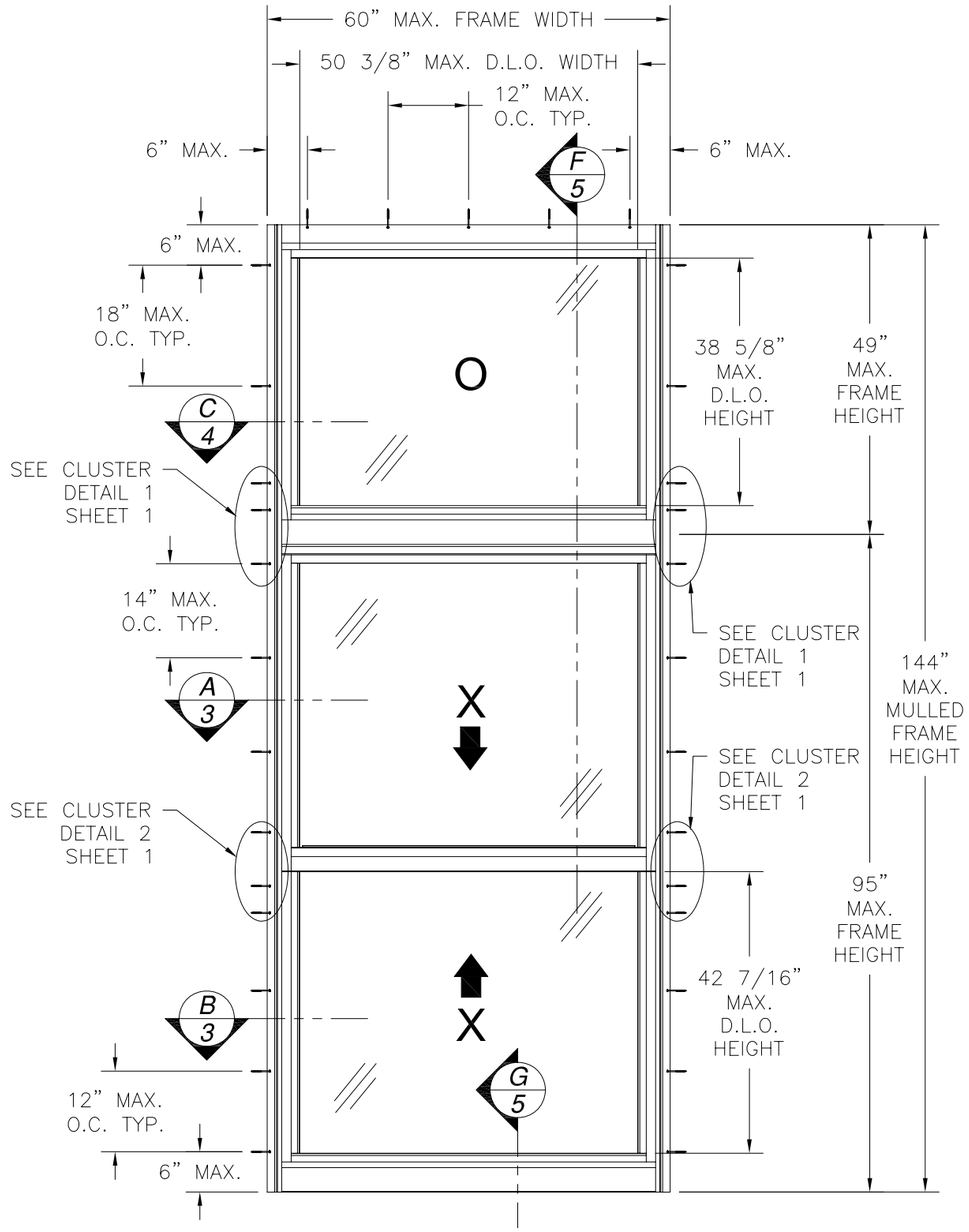

SERIES 9043 THERMALLY BROKEN ALUMINUM WINDOW WALL

EXTERIOR VIEW

DESIGN PRESSURE RATING	IMPACT RATING
+90.0 PSF -150.0 PSF	NONE

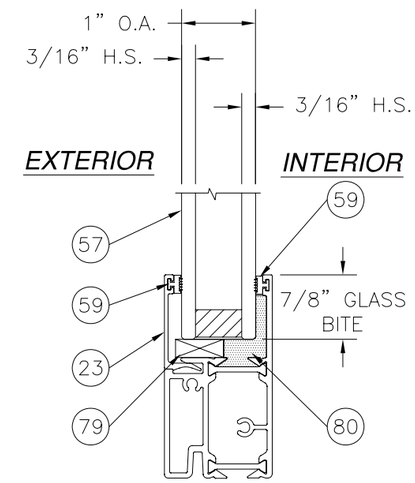

GLAZING OPTION 1

WinDoor INCORPORATED

7500 AMSTERDAM DRIVE
ORLANDO, FL 32832
Phone: 407.481.8400
Fax: 407.481.0505
www.windoorinc.com

SERIES 9043 THERMALLY BROKEN ALUMINUM WINDOW WALL – NON–IMPACT
ELEVATION, ANCHORING LAYOUT & GLAZING OPTIONS

DRAWN:	DWG NO.	REV
TJH	08–01146	–

SCALE	DATE	SHEET
NTS	01/07/11	2 OF 13

STATE OF TEXAS
LUIS R. LOMAS
101889
LICENSED
PROFESSIONAL ENGINEER

Luis R. Lomas P.E.
Texas No. 101889

PARTS LIST				
NO.	PART NUMBER	DESCRIPTION	MANUFACTURER	MATERIAL
1	904A-FR-9.10	FRAME HEAD WINDOW WALL ASSEMBLY	BONNELL	ALUMINUM 6063-T6
2	904A-FR-11.12	FRAME SILL WINDOW WALL ASSEMBLY	BONNELL	ALUMINUM 6063-T6
3	904A-FR-5.6	FRAME JAMB ASSEMBLY	BONNELL	ALUMINUM 6063-T6
4	904A-FR-1.2	FRAME HEAD ASSEMBLY	BONNELL	ALUMINUM 6063-T6
5	904A-FR-3.4	FRAME SILL ASSEMBLY	BONNELL	ALUMINUM 6063-T6
6	904A-FR-7.8	FIXED MEETING RAIL ASSEMBLY	BONNELL	ALUMINUM 6063-T6
7	904A-FR-13.14	FIXED SASH OVER DH MULL ASS'Y	BONNELL	ALUMINUM 6063-T6
8	904A-FR-15.16	DH OVER FIXED SASH MULL ASS'Y	BONNELL	ALUMINUM 6063-T6
9	904A-SA-6.11	FIXED SASH TOP & BOTTOM ASS'Y	BONNELL	ALUMINUM 6063-T6
10	904A-SA-1.2	LOWER SASH TOP RAIL ASSEMBLY	BONNELL	ALUMINUM 6063-T6
11	904A-SA-9.10	UPPER & LOWER SASH STILES ASS'Y	BONNELL	ALUMINUM 6063-T6
12	904A-SA-5b.6	UPPER SASH TOP RAIL ASSEMBLY	BONNELL	ALUMINUM 6063-T6
13	904A-SA-1.2	LOWER SASH TOP RAIL ASSEMBLY	BONNELL	ALUMINUM 6063-T6
14	904A-SA-7.8	UPPER SASH BOTTOM RAIL ASSEMBLY	BONNELL	ALUMINUM 6063-T6
15	904A-SA-3b.4	LOWER SASH BOTTOM RAIL ASSEMBLY	BONNELL	ALUMINUM 6063-T6
16	904X-AC-25	FIXED SASH RETAINER COVER	BONNELL	ALUMINUM 6063-T6
17	904X-AC-24	FIXED SASH RETAINER	BONNELL	ALUMINUM 6063-T6
18	904X-AC-1	FRAME HEAD INSULATOR	BONNELL	ALUMINUM 6063-T6
19	904X-AC-2	FRAME JAMB & FIXED LITE INSULATOR	BONNELL	ALUMINUM 6063-T6
20	904X-AC-3	BALANCE & JAMB COVER	BONNELL	ALUMINUM 6063-T6
21	904X-AC-4	HEAD & SILL COVER	BONNELL	ALUMINUM 6063-T6
22	279500	20mm STRUT	TECHNOFORM US	POLYMIDE 66
23	904X-AC-8	1" GLASS STOP	BONNELL	ALUMINUM 6063-T6
24	904X-AC-9	FLUSH BOLT	BONNELL	ALUMINUM 6063-T6
25	904X-AC-10	SILL COVER	BONNELL	ALUMINUM 6063-T6
26	904-HDW-12	SILL SCREW BACKUP PLATE	BONNELL	ALUMINUM 6063-T6
27	904-HDW-12	SILL SCREW CLIP	BONNELL	ALUMINUM 6063-T6
28	904X-AC-11	SASH STOP	BONNELL	ALUMINUM 6063-T6
29	904X-AC-16A	SNAP LOCK	BONNELL	ALUMINUM 6063-T6
30	904X-AC-17	FRAME SCREW BACKUP PLATE		
31	9044X-AC-18	SCREEN BOTTOM RAIL		
32	904X-AC-19	SCREN CENTER RAIL		
33	904X-AC-20	SCREEN STILE		
34	904X-AC-21	SCREEN TOP RAIL		
35	904-HDW-01	SASH GUIDE BRACKET	M-M PLASTICS	
36	904-HDW-02	SASH GUIDE TOP CAP	M-M PLASTICS	
37	904-HDW-03	LIFT HANDLE END CAP	M-M PLASTICS	
38	904-HDW-04	SASH GUIDE TOP CAP SCREW COVER	M-M PLASTICS	
39	904-HDW-05	FIXED MTG. RAIL RETAINER CLIP	SULLIVAN	
40	904-HDW-06	FLUSH BOLT LOCKING HANDLE	SULLIVAN	
41	904-HDW-07	SCREEN CORNER KEY	SULLIVAN	

PARTS LIST CONTINUED ON SHEET 4.

REVISIONS			
REV	DESCRIPTION	DATE	APPROVED

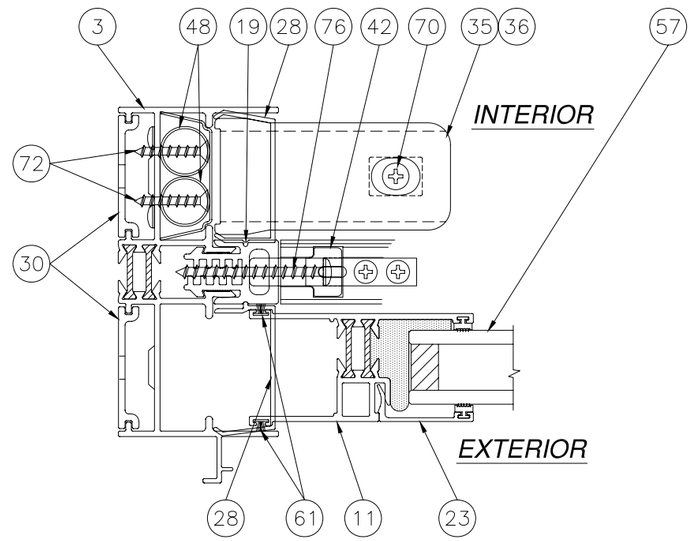

A 3 HORIZONTAL CROSS SECTION

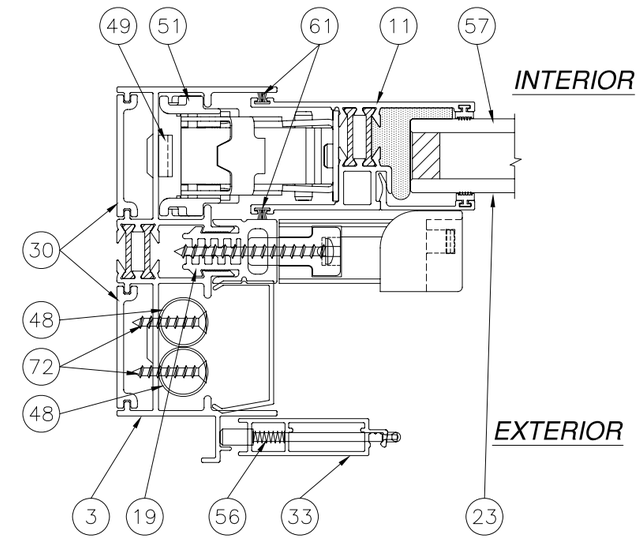

B 3 HORIZONTAL CROSS SECTION

UNIT CONSTRUCTION NOTES:

1) FRAME CONSTRUCTION:
FRAME IS A BUTT CORNER CONSTRUCTION. HEAD AND SILL ARE ATTACHED TO JAMBS WITH (4) #8 x 3/4" PPH SMS AT EACH CORNER.

2) FIXED MEETING RAIL TO FRAME ATTACHMENT:
FIXED MEETING RAIL ATTACHMENT BLOCK IS ATTACHED TO FIXED MEETING RAIL RETAINER CLIP WITH (2) #8 x 3/4" PFH SMS. FIXED MEETING RAIL IS SLIPPED OVER FIXED MEETING RAIL BLOCK AND ATTACHED WITH (1) #8 x 3/4" SMS AT EACH SIDE. FIXED MEETING RAIL BLOCK IS ATTACHED TO JAMB INSULATOR WITH (3) #10 x 2" PPH SMS AT EACH END. JAMB INSULATOR IS ATTACHED TO JAMB WITH (3) #14 x 1 1/2" PPH SMS AT EACH END.

3) OPERABLE SASH CONSTRUCTION:
BOTH UPPER AND LOWER SASH ARE BUTT CORNER CONSTRUCTION. EACH CORNER IS SCREWED TOGETHER WITH (2) #8 x 1 1/2" PH SMS.

4) FIXED SASH CONSTRUCTION:
SASH STILES ARE COPED AND BUTTED TO TOP AND BOTTOM RAILS AND ATTACHED WITH (2) #8 x 1 1/2" PH SMS AT EACH CORNER.

5) HORIZONTAL MULLION TO FRAME ATTACHMENT:
FIXED OVER OPERABLE AND OPERABLE OVER FIXED MULLIONS ARE ATTACHED TO JAMB WITH (8) #8 x 3/4" PH SMS AT EACH END.

WinDoor INCORPORATED
7500 AMSTERDAM DRIVE
ORLANDO, FL 32832
Phone: 407.481.8400
Fax: 407.481.0505
www.windoorinc.com

SERIES 9043 THERMALLY BROKEN ALUMINUM
WINDOW WALL – NON-IMPACT
BILL OF MATERIALS, CROSS SECTIONS AND NOTES

DRAWN:	DWG NO.	REV
TJH	08-01146	–
SCALE NTS	DATE 01/07/11	SHEET 3 OF 13

STATE OF TEXAS
LUIS R. LOMAS
101889
LICENSED
PROFESSIONAL ENGINEER

Luis R. Lomas P.E.
Texas No. 101889

PARTS LIST				
NO.	PART NUMBER	DESCRIPTION	MANUFACTURER	MATERIAL
42	904-HDW-08	FIXED MTG. RAIL ATTACHMENT BLOCK	M-M PLASTICS	
43	904-HDW-09	FRAME HEAD CORNER & MULL GASKET	FRANK LOWE	
44	904-HDW-10	SCREEN PLUNGER PIN	JAYSIX, INC.	
45	SK04-0004-000	FLUSH SASH LOCK	INTERLOCK	
46	SK04-2008-000	SASH LOCK BUTTON	INTERLOCK	
47	SK04-3002-000	FLUSH FACE-MOUNT KEEPER	INTERLOCK	
48	ULTRALIFT	SPIRAL BALANCE	CALDWELL	
49	21B185	BALANCE CARRIER - FRAME PART	CALDWELL	
50	21B172	BALANCE CARRIER BRACKET - SASH	CALDWELL	
51	904-HDW-11	BALANCE TAKEOUT CLIP	SULLIVAN	
52	LCS068-NS	WEEP COVER W/FLAP	LCS MOLD	
53	FD4040S	SCREEN/SNAP LOCK SPRING	FLORIDA SCREEN	
54	AI-174C-L/R	SCREEN PLUNGER PULL HANDLE	STRY-BUC	
55		.188" DIA. x 1.25" ROLL PIN	MSC SUPPLY	STAINLESS STEEL
56	5-81	SCREEN PLUNGER SPRING	STRY-BUC/BES	ALUMINUM 6063-T6
57		NON-IMPACT GLASS SEE SHEET 2		
58	279600	24mm STRUT	TECHNOFORM US	POLYMIDE 66
59	GS-VN-07A	.090" GLAZING BUMPER	TEAM PLASTICS	VINYL
60		1" x 1" INSULATOR	H-D PRODUCTS	CLOSED CELL FOAM
61		.187" BACK x .200" H.D. FIN PILE		
62		.187" BACK x .270" H.D. FIN PILE		
63		FIN PILE PAD 1.688" x 1.75" x .50"		
64		#6 x 1/2" PH FHD SMS		STAINLESS STEEL
65		#6 x 3/4" PH FHD SMS		STAINLESS STEEL
66		#6 x 1" PH PHD SMS		STAINLESS STEEL
67		#6 x 2" PH PHD SMS		STAINLESS STEEL
68		#8 x 1/2" PH PHD SELF DRILLING		STAINLESS STEEL
69		#8 x 3/4" PH FHD SMS		STAINLESS STEEL
70		#8 x 3/4" PH TRUSS HD SMS		STAINLESS STEEL
71		#8 x 3/4" PH PHD SMS		STAINLESS STEEL
72		#8 x 1" PH FHD SMS		STAINLESS STEEL
73		#8 x 1 1/2" PH PHD SMS		STAINLESS STEEL
74		#10 x 1/2" PH PHD SMS		STAINLESS STEEL
75		#10 x 3/4" PH PHD SELF DRILLING		STAINLESS STEEL
76		#10 x 2" PH PHD SMS		STAINLESS STEEL
77		#12 x 1 3/4" PH PHD SMS		STAINLESS STEEL
78		#14 x 1 1/4" PH PHD		STAINLESS STEEL
79		1/4" x 1/4" SETTING BLOCK		EDPM DUROMETER 60
80	SIKAFLEX 552	GLAZING COMPOUND	SIKA CORP.	URETHANE
81	QEZ 447-1	Q-LON FLAP SEAL	SCHLEGEL	FOAM
82	AP425	.25" DIAMETER BULB SEAL	SCHLEGEL	TPE

PARTS LIST CONTINUED FROM SHEET 3.

REVISIONS			
REV	DESCRIPTION	DATE	APPROVED

PARTS LIST				
NO.	PART NUMBER	DESCRIPTION	MANUFACTURER	MATERIAL
83	279200	18.6mm STRUT	TECHNOFORM US	POLYMIDE 66
84	279800	30mm STRUT	TECHNOFORM US	POLYMIDE 66
85	279400	20mm STRUT	TECHNOFORM US	POLYMIDE 66

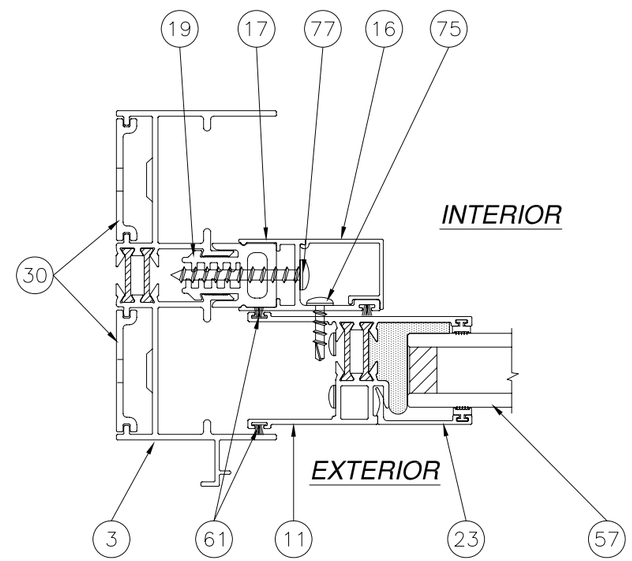

C/4 HORIZONTAL CROSS SECTION

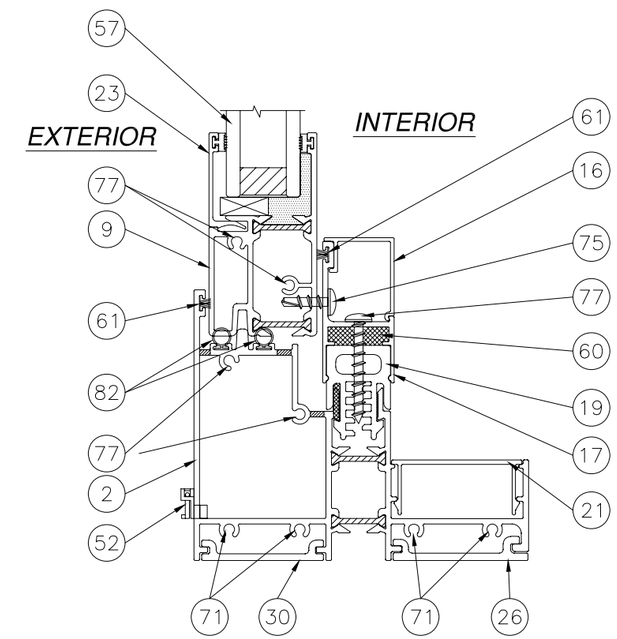

D/4 VERTICAL CROSS SECTION

WinDoor INCORPORATED

7500 AMSTERDAM DRIVE
ORLANDO, FL 32832
Phone: 407.481.8400
Fax: 407.481.0505
www.windoorinc.com

SERIES 9043 THERMALLY BROKEN ALUMINUM
WINDOW WALL - NON-IMPACT
BILL OF MATERIALS AND CROSS SECTIONS

DRAWN:	DWG NO.	REV
TJH	08-01146	-
SCALE NTS	DATE 01/07/11	SHEET 4 OF 13

STATE OF TEXAS
LUIS R. LOMAS
101889
LICENSED
PROFESSIONAL ENGINEER

Luis R. Lomas P.E.
Texas No. 101889

REVISIONS			
REV	DESCRIPTION	DATE	APPROVED

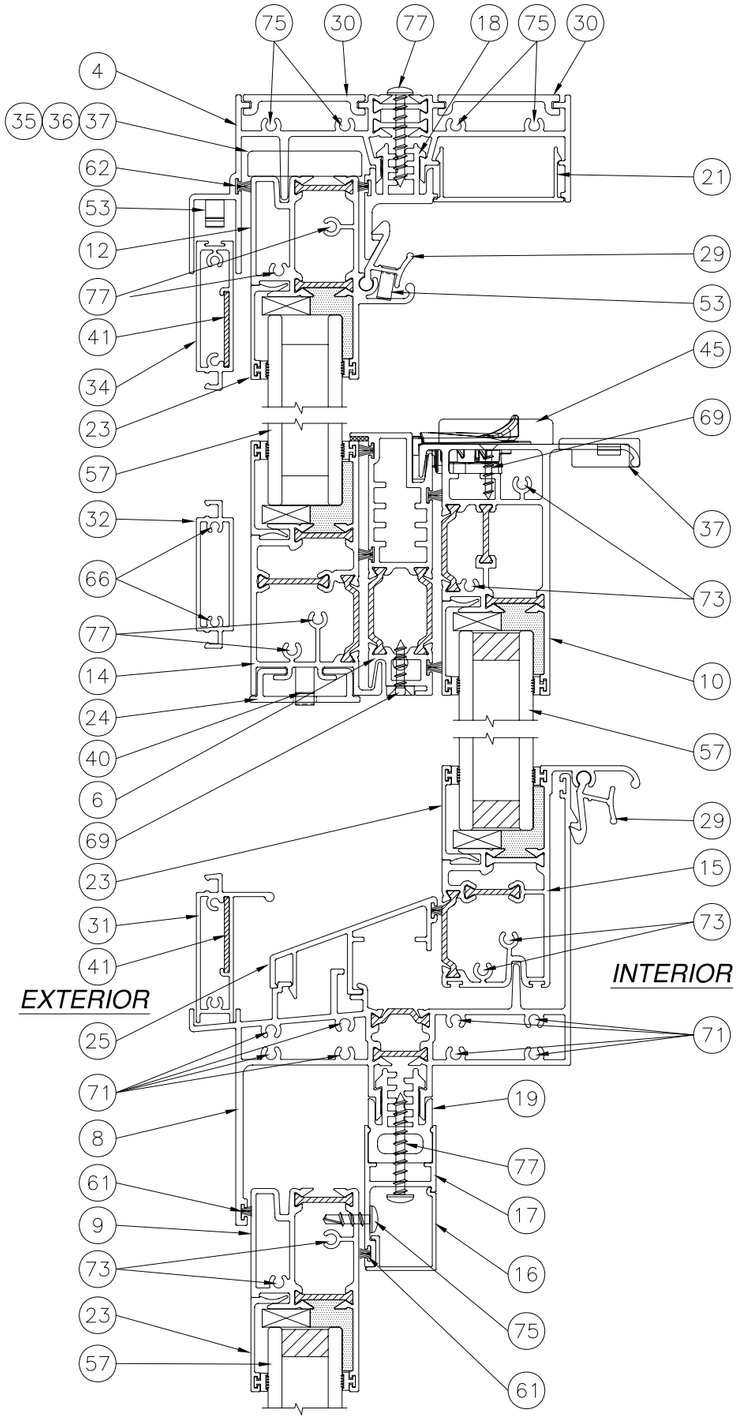

E/5 VERTICAL CROSS SECTION

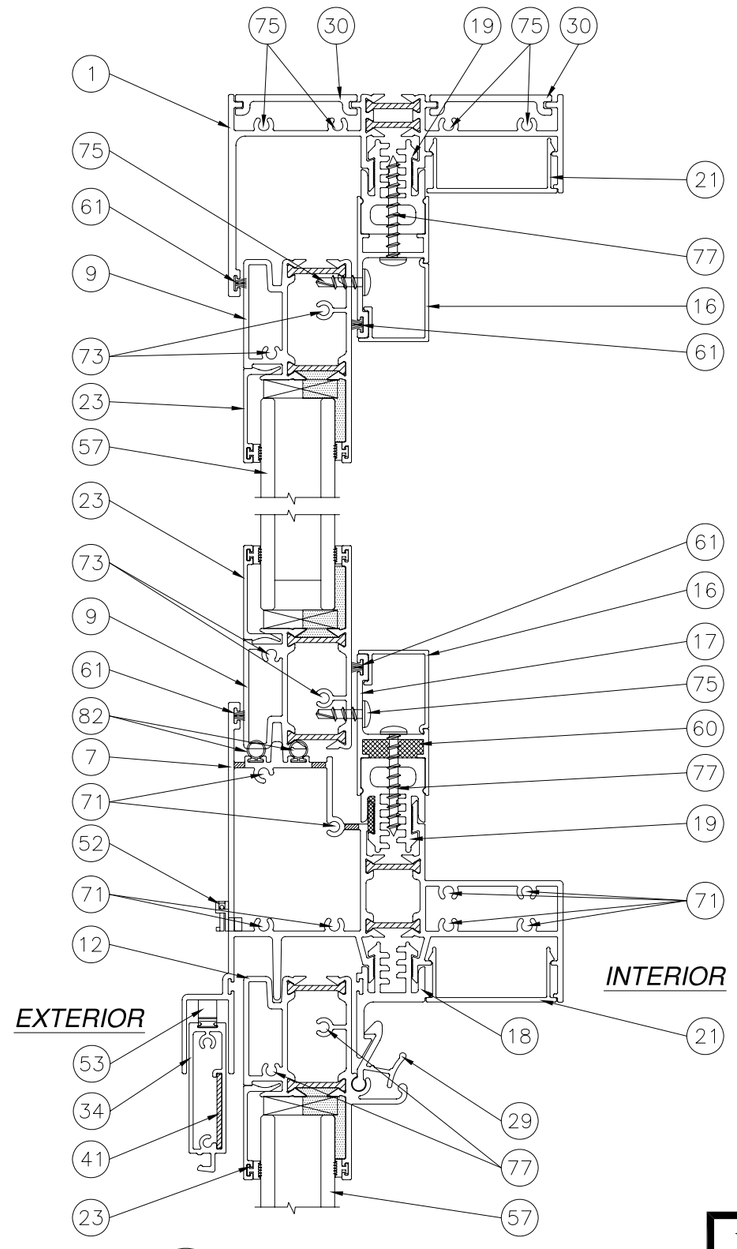

F/5 VERTICAL CROSS SECTION

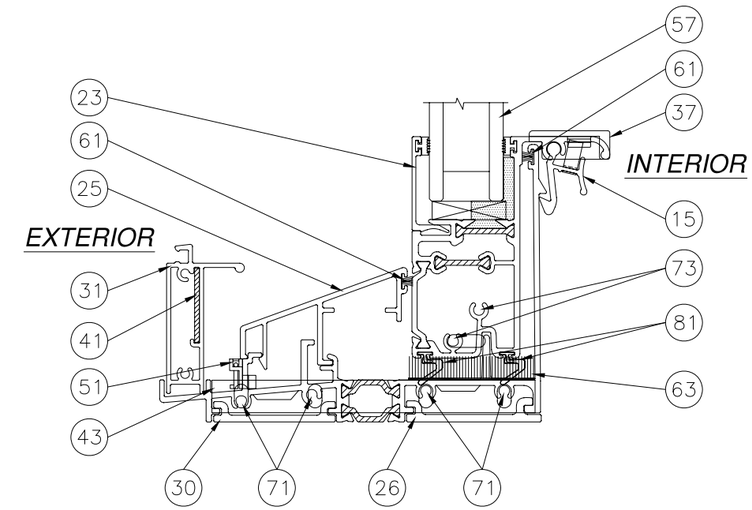

G/5 VERTICAL CROSS SECTION

WinDoor INCORPORATED
7500 AMSTERDAM DRIVE
ORLANDO, FL 32832
Phone: 407.481.8400
Fax: 407.481.0505
www.windoorinc.com

SERIES 9043 THERMALLY BROKEN ALUMINUM
WINDOW WALL – NON-IMPACT
CROSS SECTIONS

DRAWN:	DWG NO.	REV
TJH	08-01146	–
SCALE NTS	DATE 01/07/11	SHEET 5 OF 13

STATE OF TEXAS
LUIS R. LOMAS
101889
LICENSED
PROFESSIONAL ENGINEER

Luis R. Lomas P.E.
Texas No. 101889

REVISIONS			
REV	DESCRIPTION	DATE	APPROVED

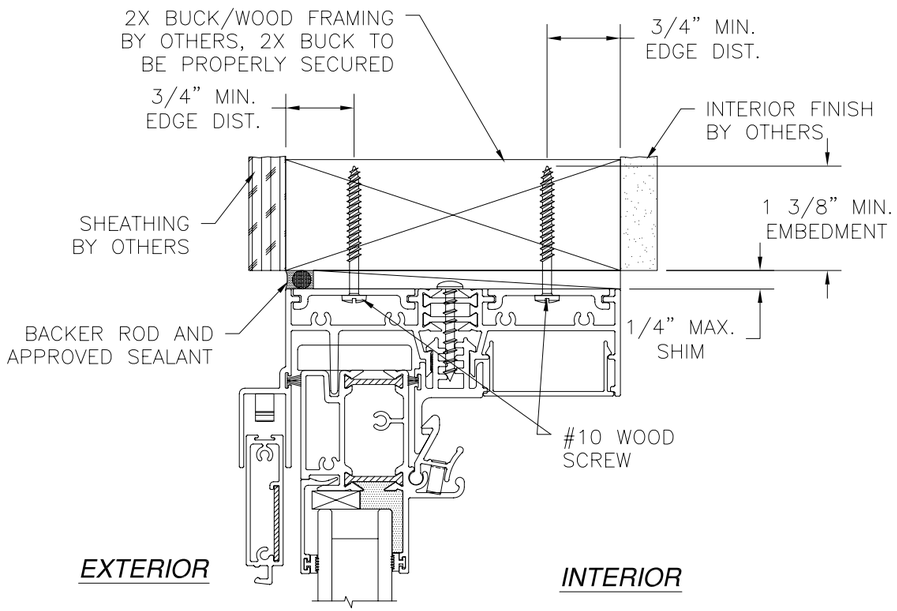

VERTICAL CROSS SECTION
2X BUCK/WOOD FRAMING INSTALLATION
OPERABLE HEAD

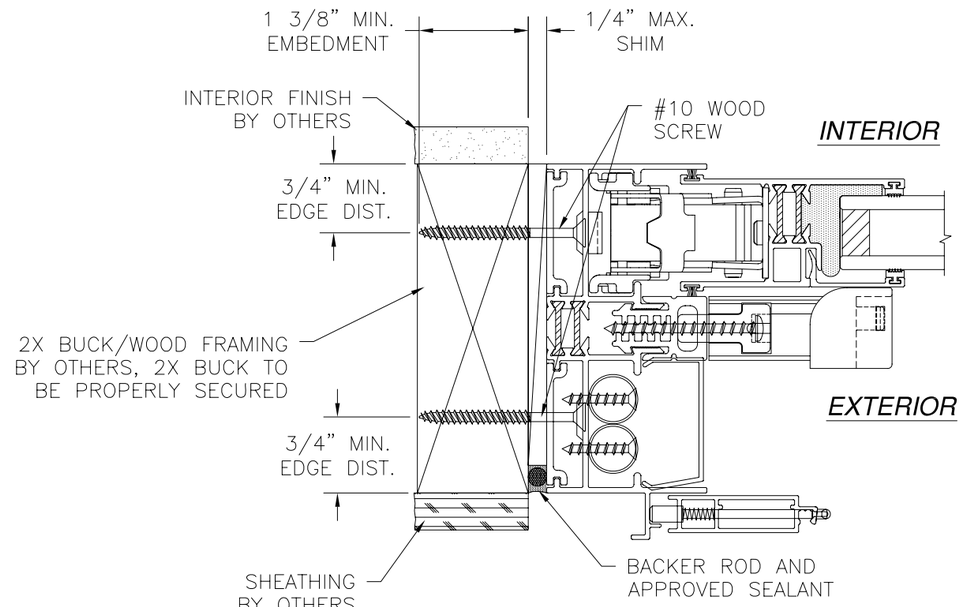

VERTICAL CROSS SECTION
2X BUCK/WOOD FRAMING INSTALLATION
OPERABLE JAMB SHOWN, FIXED JAMB SIMILAR

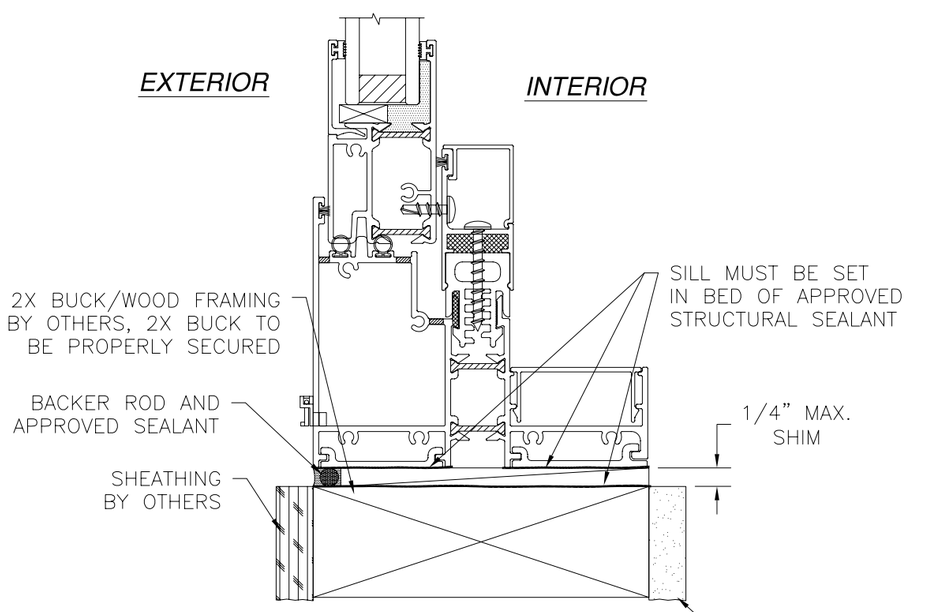

VERTICAL CROSS SECTION
2X BUCK/WOOD FRAMING INSTALLATION
FIXED SILL

WinDoor INCORPORATED
7500 AMSTERDAM DRIVE
ORLANDO, FL 32832
Phone: 407.481.8400
Fax: 407.481.0505
www.windoorinc.com

SERIES 9043 THERMALLY BROKEN ALUMINUM WINDOW WALL – NON–IMPACT INSTALLATION DETAILS

DRAWN:	DWG NO.	REV
TJH	08–01146	–
SCALE NTS	DATE 01/07/11	SHEET 6 OF 13

Luis R. Lomas P.E.
Texas No. 101889

REVISIONS			
REV	DESCRIPTION	DATE	APPROVED

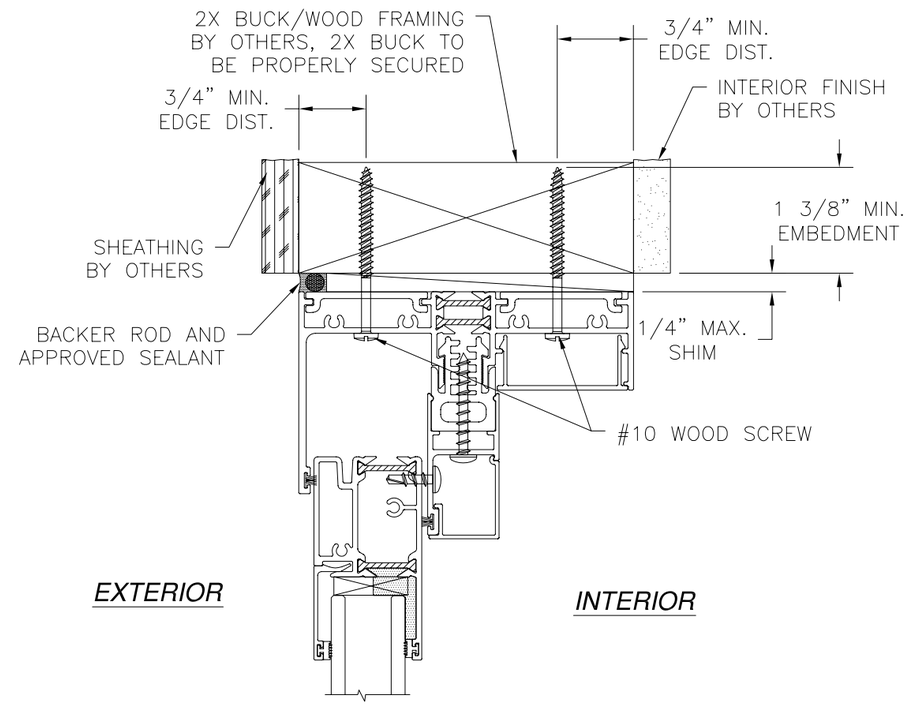

VERTICAL CROSS SECTION
2X BUCK/WOOD FRAMING INSTALLATION
FIXED HEAD

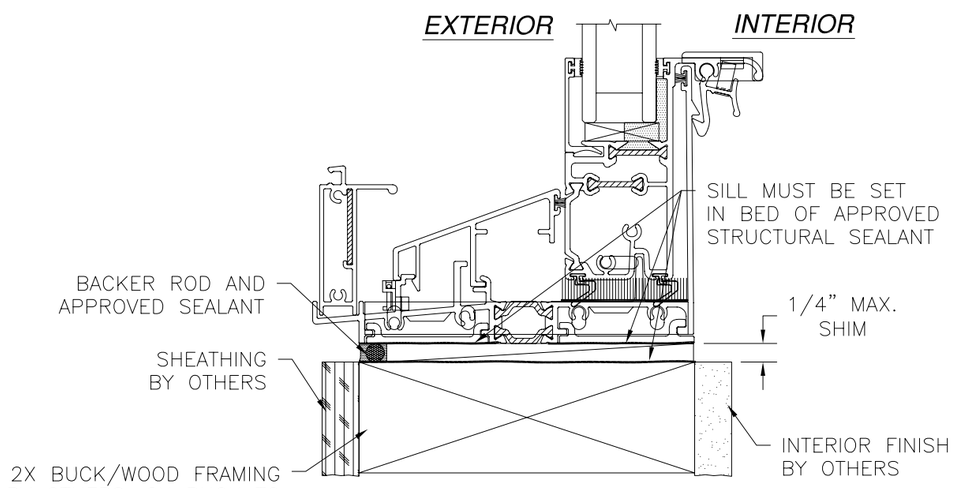

VERTICAL CROSS SECTION
2X BUCK/WOOD FRAMING INSTALLATION
OPERABLE SILL

WinDoor INCORPORATED
7500 AMSTERDAM DRIVE
ORLANDO, FL 32832
Phone: 407.481.8400
Fax: 407.481.0505
www.windoorinc.com

SERIES 9043 THERMALLY BROKEN ALUMINUM
WINDOW WALL – NON-IMPACT
INSTALLATION DETAILS

DRAWN:	DWG NO.	REV
TJH	08-01146	–

SCALE	DATE	SHEET
NTS	01/07/11	7 OF 13

Luis R. Lomas P.E.
Texas No. 101889

REVISIONS			
REV	DESCRIPTION	DATE	APPROVED

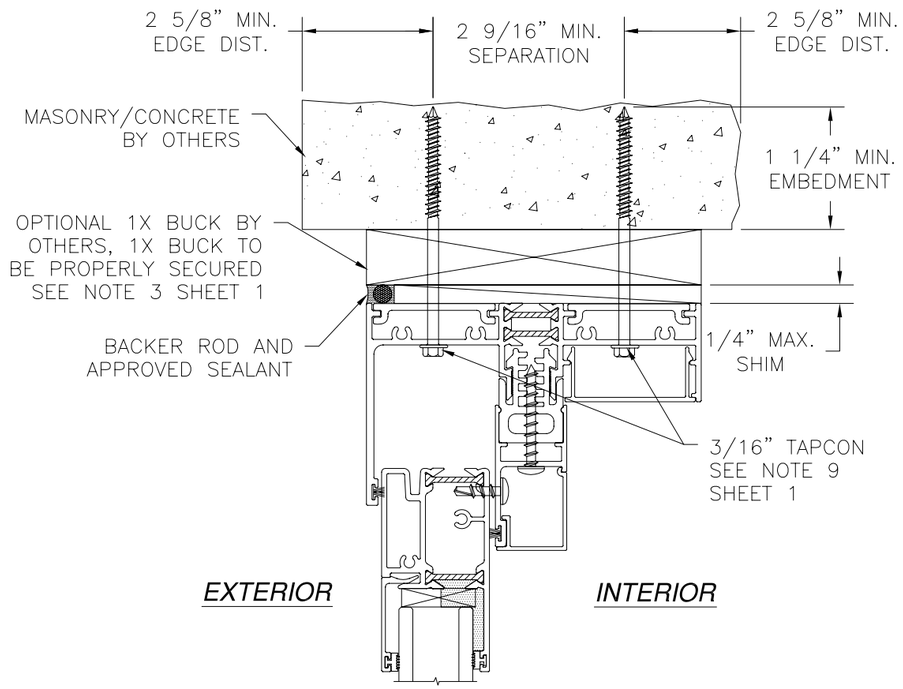

VERTICAL CROSS SECTION
MASONRY/CONCRETE INSTALLATION
FIXED HEAD

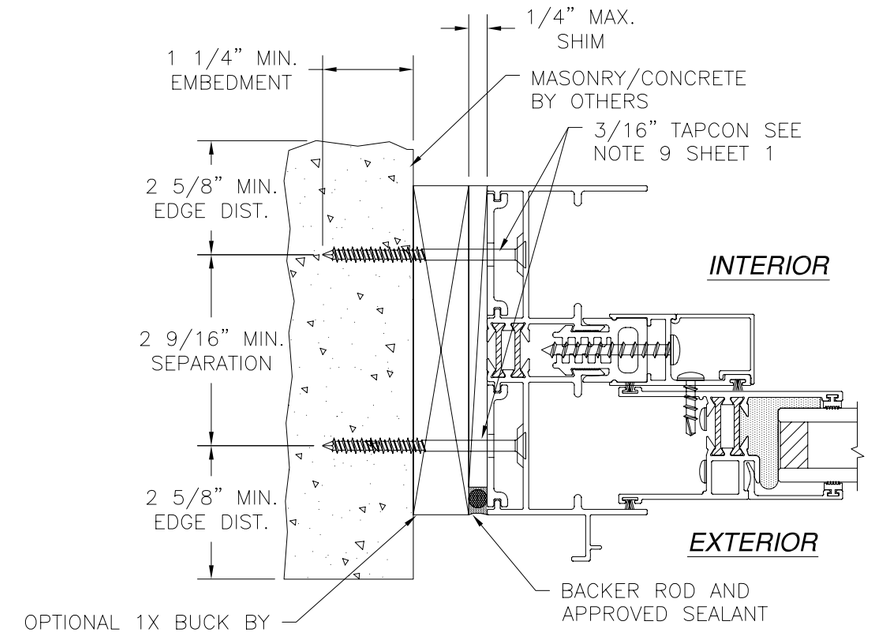

VERTICAL CROSS SECTION
MASONRY/CONCRETE INSTALLATION
FIXED JAMB SHOWN, OPERABLE JAMB SIMILAR

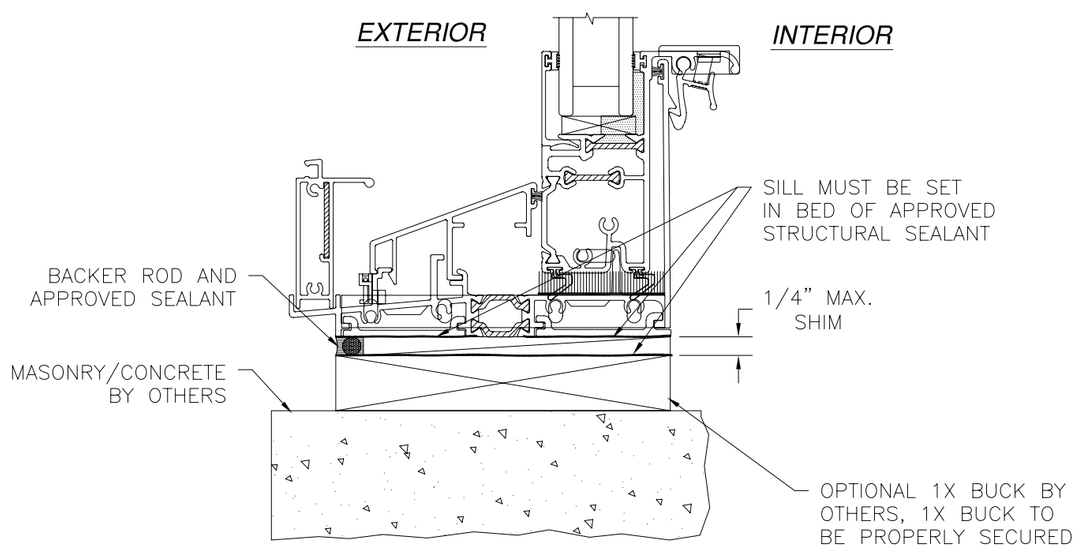

VERTICAL CROSS SECTION
MASONRY/CONCRETE INSTALLATION
OPERABLE SILL

WinDoor INCORPORATED
7500 AMSTERDAM DRIVE
ORLANDO, FL 32832
Phone: 407.481.8400
Fax: 407.481.0505
www.windoorinc.com

SERIES 9043 THERMALLY BROKEN ALUMINUM WINDOW WALL – NON–IMPACT INSTALLATION DETAILS

DRAWN:	DWG NO.	REV
TJH	08–01146	–
SCALE NTS	DATE 01/07/11	SHEET 8 OF 13

Luis R. Lomas P.E.
Texas No. 101889

REVISIONS			
REV	DESCRIPTION	DATE	APPROVED

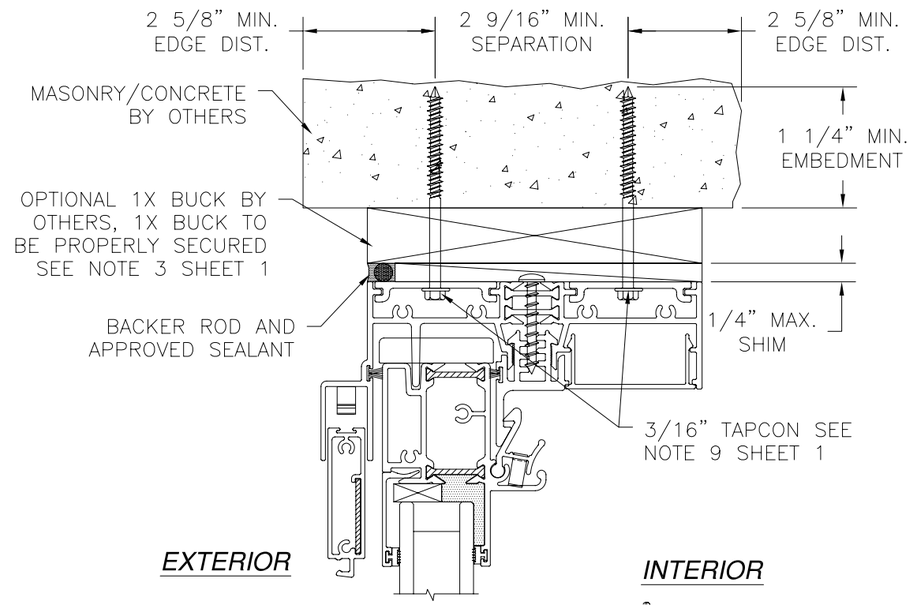

VERTICAL CROSS SECTION
MASONRY/CONCRETE INSTALLATION
OPERABLE HEAD

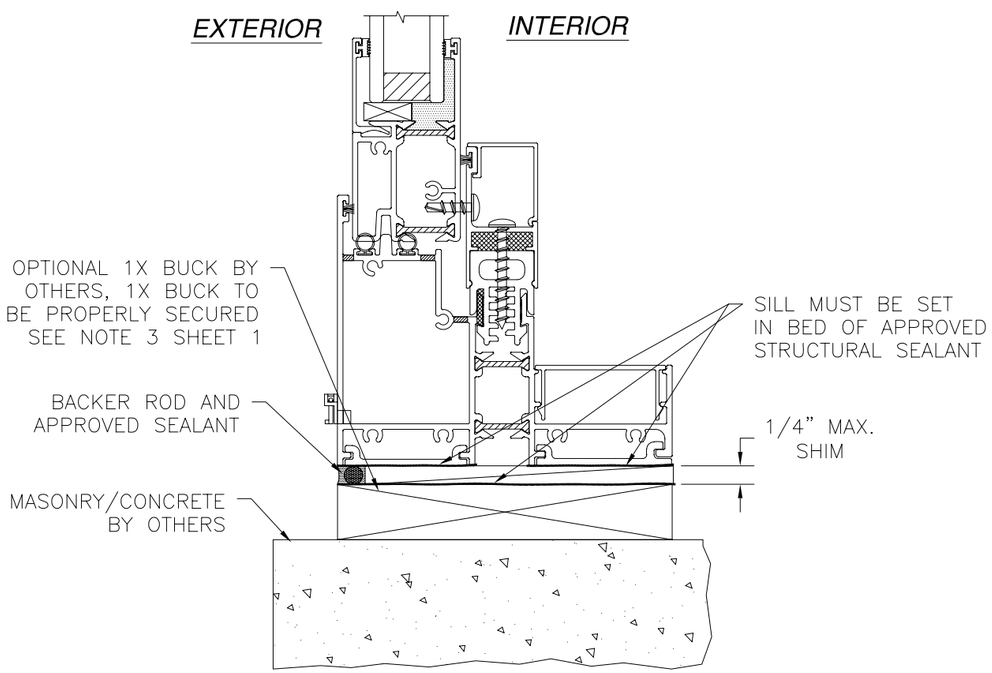

VERTICAL CROSS SECTION
MASONRY/CONCRETE INSTALLATION
FIXED SILL

WinDoor INCORPORATED
7500 AMSTERDAM DRIVE
ORLANDO, FL 32832
Phone: 407.481.8400
Fax: 407.481.0505
www.windoorinc.com

SERIES 9043 THERMALLY BROKEN ALUMINUM
WINDOW WALL – NON-IMPACT
INSTALLATION DETAILS

DRAWN:	DWG NO.	REV
TJH	08-01146	–

SCALE	DATE	SHEET
NTS	01/07/11	9 OF 13

STATE OF TEXAS
LUIS R. LOMAS
101889
LICENSED
PROFESSIONAL ENGINEER

Luis R. Lomas P.E.
Texas No. 101889

REVISIONS			
REV	DESCRIPTION	DATE	APPROVED

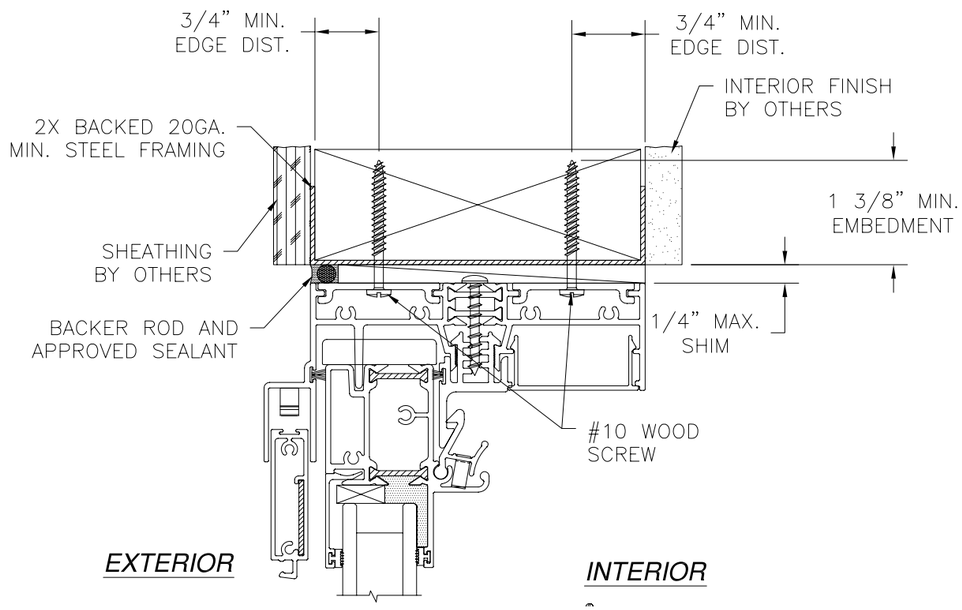

VERTICAL CROSS SECTION

2X BACKED STEEL FRAMING INSTALLATION
OPERABLE HEAD

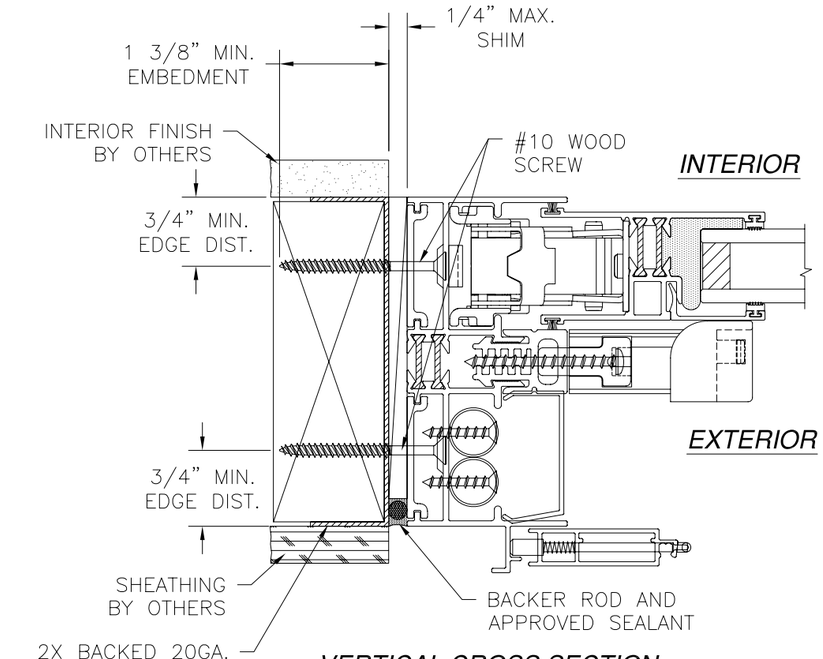

VERTICAL CROSS SECTION

2X BACKED STEEL FRAMING INSTALLATION
OPERABLE JAMB SHOWN, FIXED JAMB SIMILAR

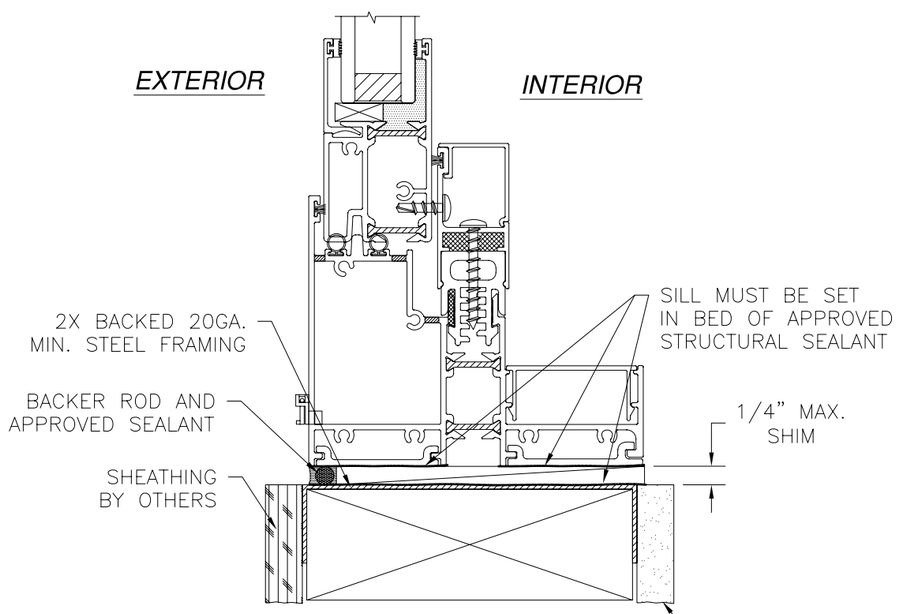

VERTICAL CROSS SECTION

2X BACKED STEEL FRAMING INSTALLATION
FIXED SILL

WinDoor INCORPORATED
7500 AMSTERDAM DRIVE
ORLANDO, FL 32832
Phone: 407.481.8400
Fax: 407.481.0505
www.windoorinc.com

SERIES 9043 THERMALLY BROKEN ALUMINUM
WINDOW WALL – NON–IMPACT
INSTALLATION DETAILS

DRAWN:	DWG NO.	REV
TJH	08–01146	–
SCALE NTS	DATE 01/07/11	SHEET 10 OF 13

Luis R. Lomas P.E.
Texas No. 101889

REVISIONS			
REV	DESCRIPTION	DATE	APPROVED

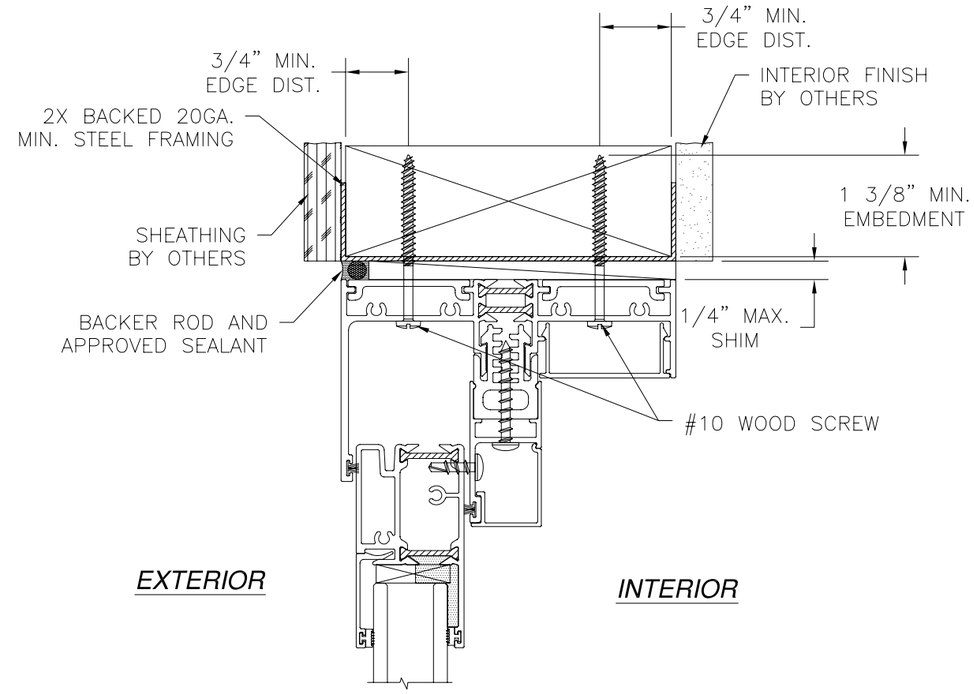

VERTICAL CROSS SECTION
2X BACKED STEEL FRAMING INSTALLATION
FIXED HEAD

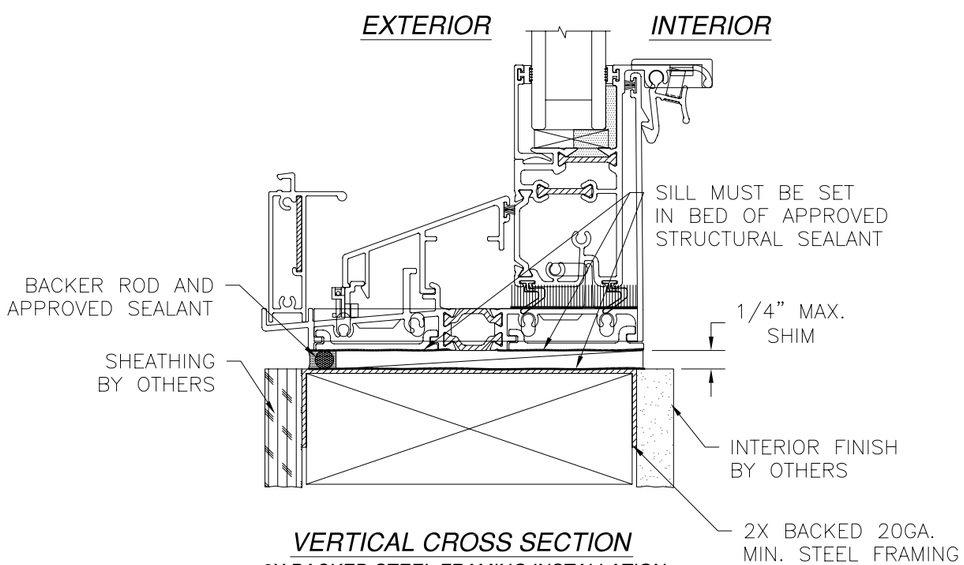

VERTICAL CROSS SECTION
2X BACKED STEEL FRAMING INSTALLATION
OPERABLE SILL

WinDoor INCORPORATED
7500 AMSTERDAM DRIVE
ORLANDO, FL 32832
Phone: 407.481.8400
Fax: 407.481.0505
www.windoorinc.com

SERIES 9043 THERMALLY BROKEN ALUMINUM
WINDOW WALL – NON–IMPACT
INSTALLATION DETAILS

DRAWN:	DWG NO.	REV
TJH	08–01146	–
SCALE NTS	DATE 01/07/11	SHEET 11 OF 13

Luis R. Lomas P.E.
Texas No. 101889

REVISIONS			
REV	DESCRIPTION	DATE	APPROVED

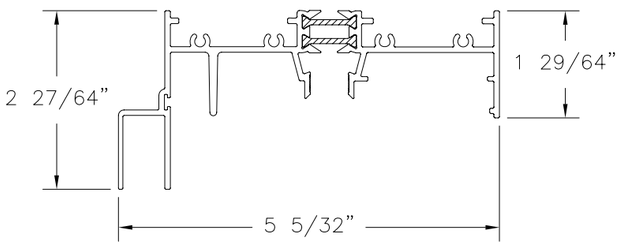

1 FRAME HEAD WINDOW WALL ASSEMBLY
ALLUMINUM 6063-T6 .075" THICK

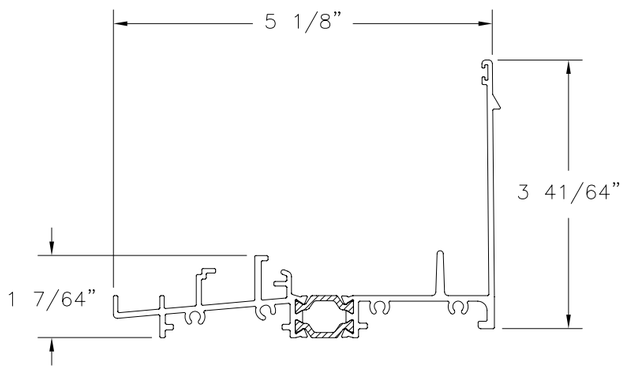

2 FRAME SILL WINDOW WALL ASSEMBLY
ALLUMINUM 6063-T6 .075" THICK

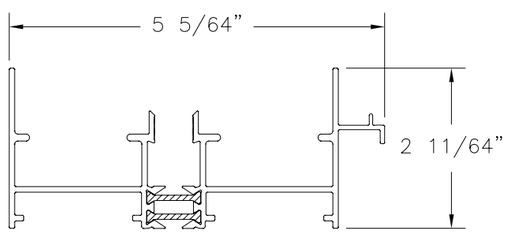

3 FRAME JAMB ASSEMBLY
ALLUMINUM 6063-T6 .075" THICK

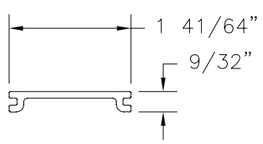

30 FRAME SCREW BACKUP PLATE
ALLUMINUM 6063-T6 .090" THICK

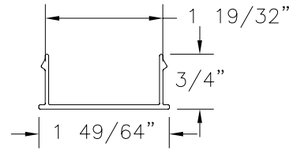

21 HEAD & SILL COVER
ALLUMINUM 6063-T6 .060" THICK

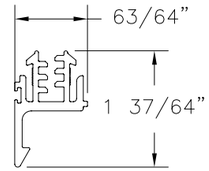

18 FRAME HEAD INSULATOR
ALLUMINUM 6063-T6 .125 THICK

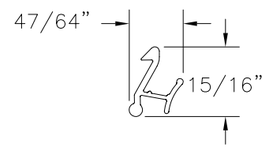

29 SNAP LOCK
ALLUMINUM 6063-T6 .050" THICK

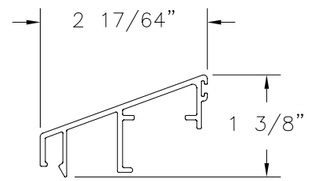

25 SILL COVER
ALLUMINUM 6063-T6 .070" THICK

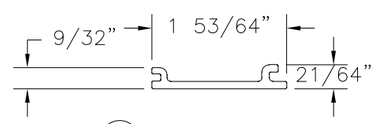

26 SILL SCREW BACKUP PLATE
ALLUMINUM 6063-T6 .100" THICK

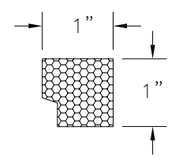

60 1" x 1" INSULATOR
CLOSED CELL FOAM

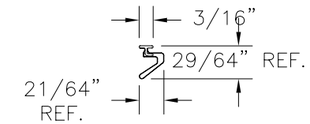

81 Q-LON FLAP SEAL
FOAM

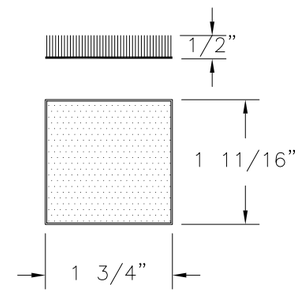

63 FIN PILE PAD

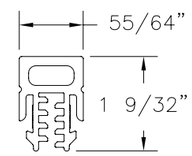

19 FRAME JAMB & FIXED LITE INSULATOR
ALLUMINUM 6063-T6 .125" THICK

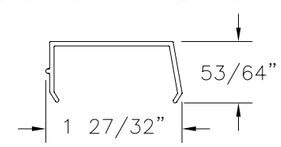

28 SASH STOP
ALLUMINUM 6063-T6 .060" THICK

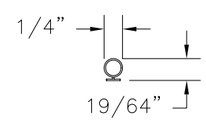

82 BULD SEAL
VINYL

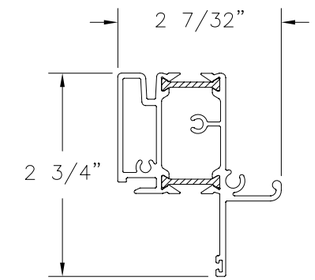

12 UPPER SASH TOP RAIL ASSEMBLY
ALLUMINUM 6063-T6 .070" THICK

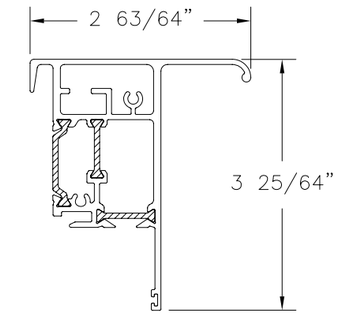

13 LOWER SASH TOP RAIL ASSEMBLY
ALLUMINUM 6063-T6 .100" THICK

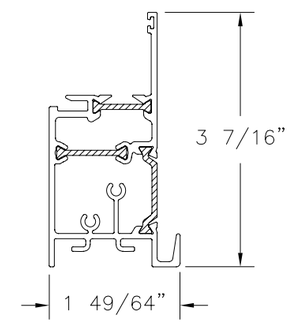

14 UPPER SASH BOTTOM RAIL ASSEMBLY
ALLUMINUM 6063-T6 .075" THICK

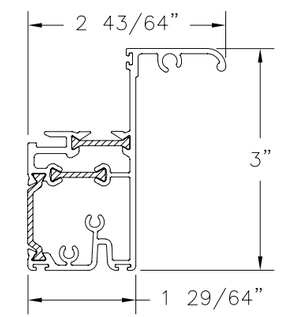

15 LOWER SASH BOTTOM RAIL ASSEMBLY
ALLUMINUM 6063-T6 .075" THICK

WinDoor INCORPORATED

7500 AMSTERDAM DRIVE
ORLANDO, FL 32832
Phone: 407.481.8400
Fax: 407.481.0505
www.windoorinc.com

SERIES 9043 THERMALLY BROKEN ALUMINUM WINDOW WALL – NON–IMPACT COMPONENTS

DRAWN:	DWG NO.	REV
TJH	08–01146	–
SCALE NTS	DATE 01/07/11	SHEET 12 OF 13

Luis R. Lomas P.E.
Texas No. 101889

REVISIONS			
REV	DESCRIPTION	DATE	APPROVED

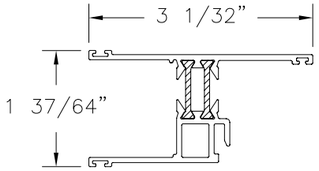

(11) UPPER & LOWER SASH STILE ASSEMBLY
ALLUMINUM 6063-T6 .070" THICK

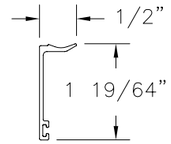

(23) 1" GLASS STOP
ALLUMINUM 6063-T6 .050" THICK

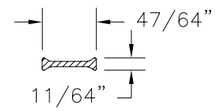

(83) 18.6mm STRUT
POLYMIDE 66 .071" THICK

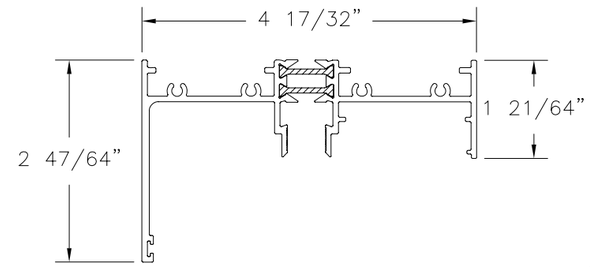

(4) FRAME HEAD ASSEMBLY
ALLUMINUM 6063-T6 .075" THICK

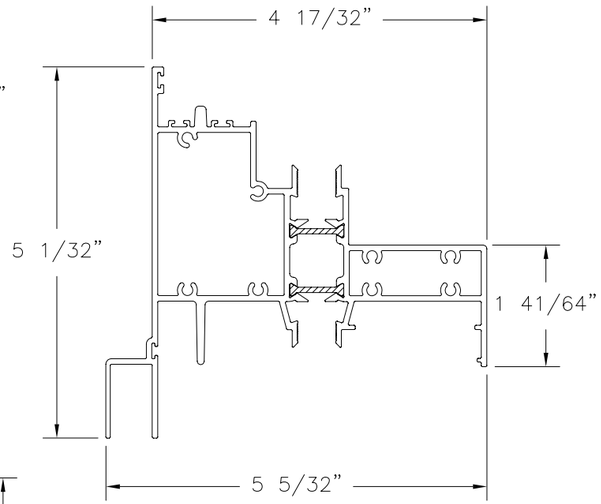

(7) FIXED SASH OVER DOUBLE HUNG MULL ASSEMBLY
ALLUMINUM 6063-T6 .075" THICK

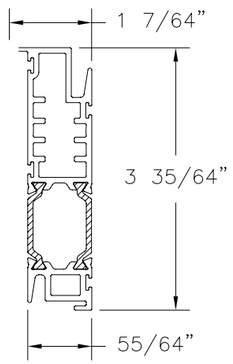

(6) FRAME FIXED MEETING RAIL ASSEMBLY
ALLUMINUM 6063-T6 .075" THICK

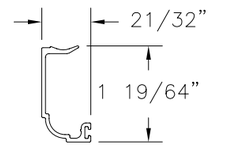

(22) .437" - .562" GLASS STOP
ALLUMINUM 6063-T6 .050" THICK

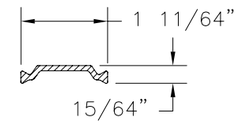

(84) 30mm STRUT
POLYMIDE 66 .071" THICK

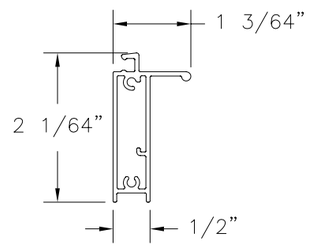

(31) SCREEN BOTTOM RAIL
ALLUMINUM 6063-T6 .055" THICK

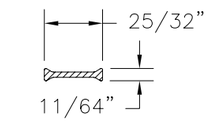

(85) 20mm STRUT
POLYMIDE 66 .071" THICK

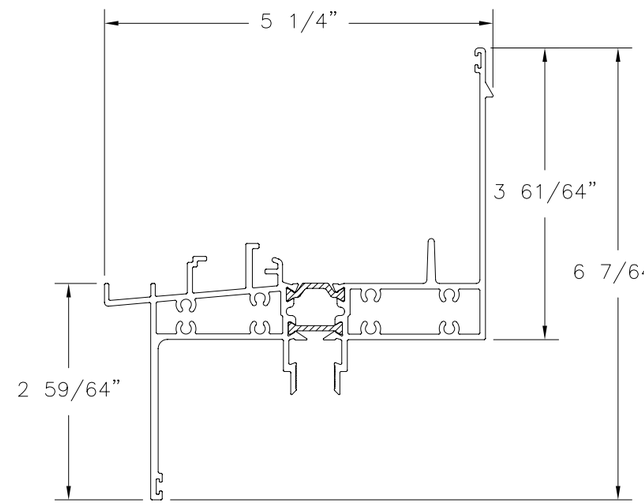

(8) DOUBLE HUNG OVER FIXED SASH MULL ASSEMBLY
ALLUMINUM 6063-T6 .075" THICK

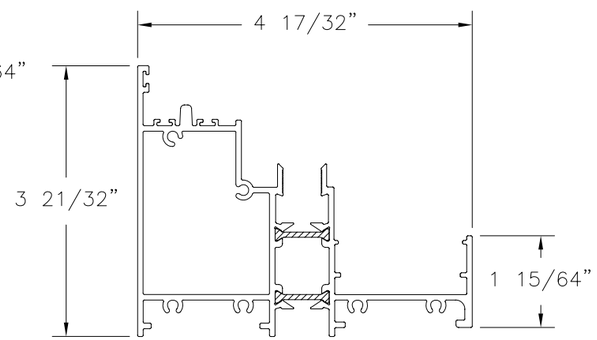

(5) FRAME SILL ASSEMBLY
ALLUMINUM 6063-T6 .075" THICK

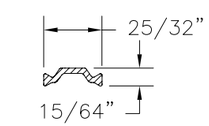

(22) 20mm STRUT
POLYMIDE 66 .071" THICK

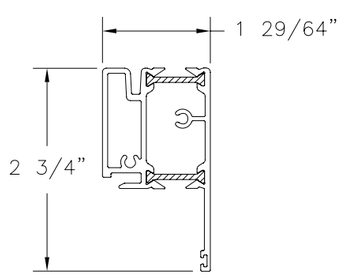

(9) FIXED SASH TOP & BOTTOM RAIL ASSEMBLY
ALLUMINUM 6063-T6 .070" THICK

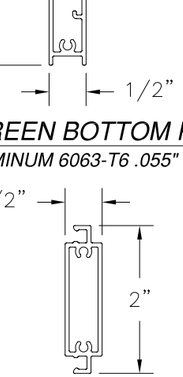

(32) SCREEN CENTER RAIL
ALLUMINUM 6063-T6 .055" THICK

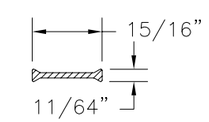

(58) 24mm STRUT
POLYMIDE 66 .071" THICK

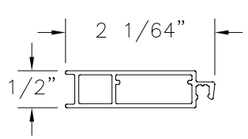

(33) SCREEN STILE
ALLUMINUM 6063-T6 .055" THICK

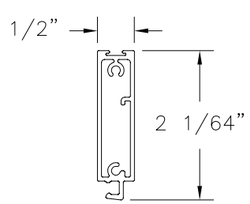

(34) SCREEN TOP RAIL
ALLUMINUM 6063-T6 .055" THICK

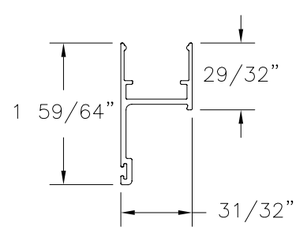

(17) FIXED SASH RETAINER
ALLUMINUM 6063-T6 .070" THICK

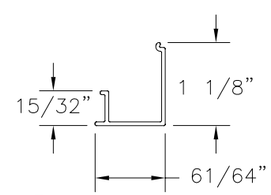

(16) FIXED SASH RETAINER COVER
ALLUMINUM 6063-T6 .050" THICK

WinDoor INCORPORATED
7500 AMSTERDAM DRIVE
ORLANDO, FL 32832
Phone: 407.481.8400
Fax: 407.481.0505
www.windoorinc.com

SERIES 9043 THERMALLY BROKEN ALUMINUM WINDOW WALL – NON–IMPACT COMPONENTS

DRAWN:	DWG NO.	REV
TJH	08–01146	–
SCALE NTS	DATE 01/07/11	SHEET 13 OF 13

STATE OF TEXAS
LUIS R. LOMAS
101889
LICENSED
PROFESSIONAL ENGINEER

Luis R. Lomas P.E.
Texas No. 101889