NAIL FIN INSTALLATION

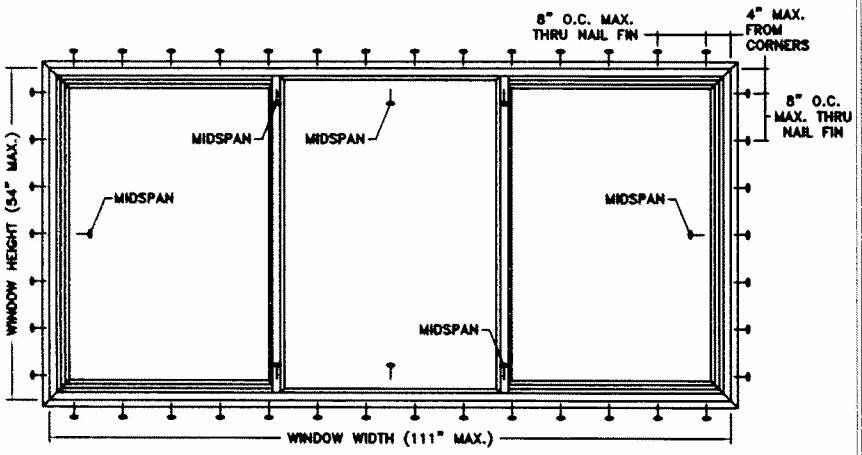

TYPICAL ELEVATION WITH FASTENER SPACING

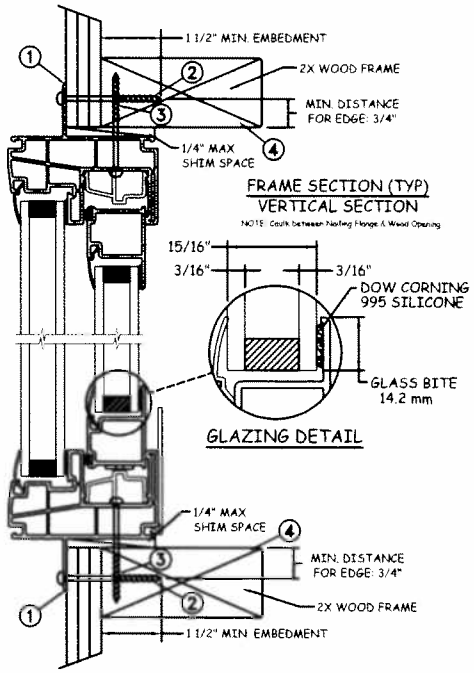

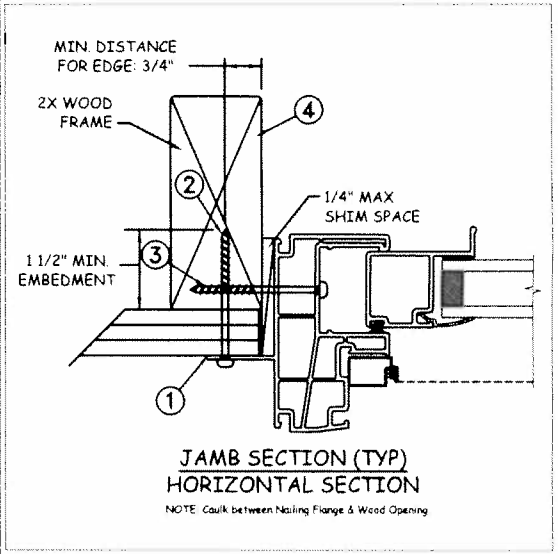

Max Frame	DP RATING	IMPACT
111" x 54"	+50/-55	NO

Installation Notes:

1. Seal flange/frame to substrate.
2. Use #10 PH or greater fastener though the nail fin with sufficient length to penetrate a minimum of 1 1/2" into the wood framing. For 2X wood frame substrate (min. S.G. = 0.42).
3. Use #10 PH or greater fastener though the frame with sufficient length to penetrate a minimum of 1 1/2" into the wood framing. For 2X wood frame substrate (min. S.G. = 0.42).
4. Host structure (wood buck, masonry, steel) to be designed and anchored to properly transfer all loads to the structure. The host structure is the responsibility of the architect or engineer of record for the project of installation.

General Notes:

1. The product shown herein is designed, tested and manufactured to comply with the wind load criteria of the adopted International Building Code(IBC), the International Residential Code(IRC), the Texas Revisions and the industry requirement for the stated conditions.
2. All glazing shall conform to ASTM E1300.
3. At minimum, glazing shall be 5.0mm annealed insulating glass.
4. Use structural or composite shims where required.

This schedule addresses only the fasteners required to anchor the window to achieve the rated design pressure up to the size limitations noted. It is not intended as a guide to the installation process and does not address he sealing consideration that may arise in different wall conditions. For the complete installation procedure, see the instructions packaged with the window or go to www.jeld-wen.com.

DISCLAIMER:
This drawing and its contents are confidential and are not to be reproduced or copied in whole or in part or used or disclosed to others except as authorized by JELD-WEN Inc.

Digitally signed by Hermes F Norero, P.E.
Reason: I am approving this document
Date: 2016.01.15 18:16:15 -05'00'

STATE OF TEXAS
HERMES F. NORERO
118471
PROFESSIONAL ENGINEER
398 East Dania Beach Blvd., Suite 338
Dania Beach, FL 33004

PROJECT ENGINEER: --	DATE: 01/06/2015	JELD-WEN	3737 Lakeport Blvd Klamath Falls, OR. 97601 Phone: (800) 535-3936
DRAWN BY: D. Vezo	SCALE: NTS		
CHECKED BY: J. Goossen	TITLE: Premium Atlantic Vinyl Horizontal Slider		
APPROVED BY: --			
PART/PROJECT No.: D009345			
IDENTIFIER No.: NCTL 210-4010-01A	PLANT NAME AND LOCATION:	CAD DWG. No.:	REV: 00 / SHEET 1 OF 4

THROUGH FRAME INSTALLATION

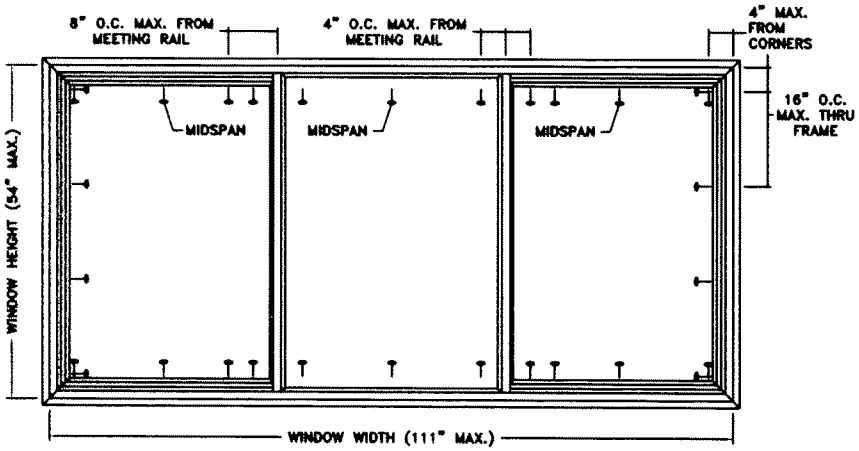

TYPICAL ELEVATION WITH FASTENER SPACING

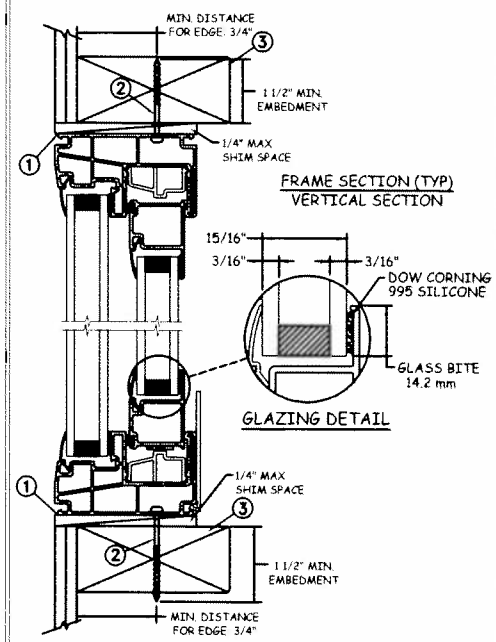

FRAME SECTION (TYP)
VERTICAL SECTION

GLAZING DETAIL

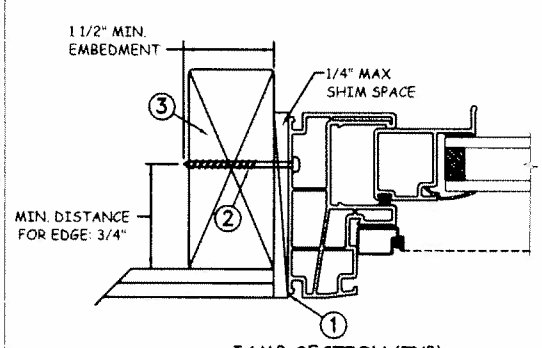

JAMB SECTION (TYP)
HORIZONTAL SECTION

Max Frame	DP RATING	IMPACT
111" x 54"	+50/-55	NO

Installation Notes:

1. Seal flange/frame to substrate.
2. Use #10 PH or greater fastener though the frame with sufficient length to penetrate a minimum of 1 1/2" into the wood framing. For 2X wood frame substrate (min. S.G. = 0.42).
3. Host structure (wood buck, masonry, steel) to be designed and anchored to properly transfer all loads to the structure. The host structure is the responsibility of the architect or engineer of record for the project of installation.

General Notes:

1. The product shown herein is designed, tested and manufactured to comply with the wind load criteria of the adopted International Building Code(IBC), the International Residential Code(IRC), the Texas Revisions and the industry requirement for the stated conditions.
2. All glazing shall conform to ASTM E1300.
3. At minimum, glazing shall be 5.0mm annealed insulating glass.
4. Use structural or composite shims where required.

This schedule addresses only the fasteners required to anchor the window to achieve the rated design pressure up to the size limitations noted. It is not intended as a guide to the installation process and does not address he sealing consideration that may arise in different wall conditions. For the complete installation procedure, see the instructions packaged with the window or go to www.jeld-wen.com.

DISCLAIMER:
This drawing and its contents are confidential and are not to be reproduced or copied in whole or in part or used or disclosed to others except as authorized by JELD-WEN Inc.

STATE OF TEXAS
HERMES F. NORERO
118471
PROFESSIONAL ENGINEER
398 East Dania Beach Blvd., Suite 338
Dania Beach, FL 33004

PROJECT ENGINEER: --	DATE: 01/06/2016	JELD-WEN	3737 Lakeport Blvd Klamath Falls, OR. 97601 Phone: (800) 535-3936	
DRAWN BY: D. Vezo	SCALE: NTS			
CHECKED BY: J. Goossen	TITLE: Premium Atlantic Vinyl Horizontal Slider			
APPROVED BY: --				
PART/PROJECT No.: D009345				
IDENTIFIER No. NCTL 210-4010-01A	PLANT NAME AND LOCATION:	CAD DWG. No.:	REV: 00	SHEET 2 OF 4

MASONRY INSTALLATION

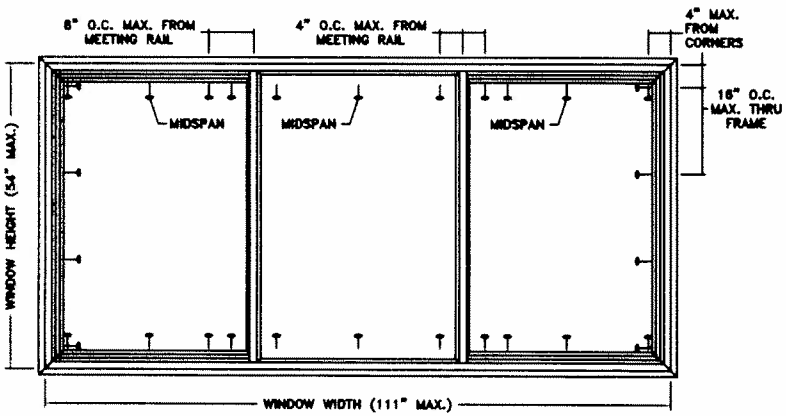

TYPICAL ELEVATION WITH FASTENER SPACING

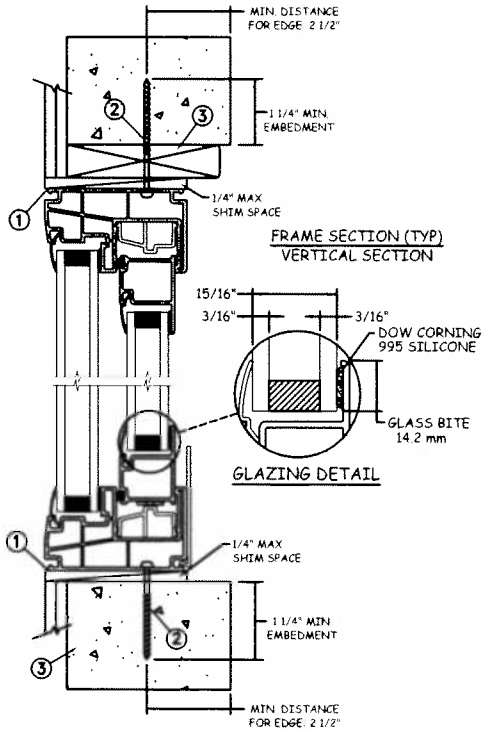

FRAME SECTION (TYP)
VERTICAL SECTION

GLAZING DETAIL

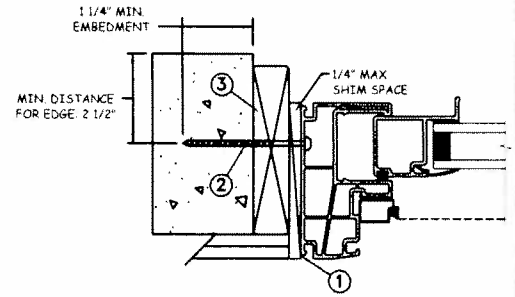

JAMB SECTION (TYP)
HORIZONTAL SECTION

Max Frame	DP RATING	IMPACT
111" x 54"	+50/-55	NO

Installation Notes:

1. Seal flange/frame to substrate.
2. Use 3/16" Tapcon or equivalent fasteners through frame with sufficient length to penetrate a minimum of 1 1/4" into concrete or masonry at each location with a 2 1/2" min from edge distance. For concrete (min. f'c = 3000psi) or masonry substrate (CMU shall adhere to ASTM C90).
3. Host structure (wood buck, masonry, steel) to be designed and anchored to properly transfer all loads to the structure. The host structure is the responsibility of the architect or engineer of record for the project of installation.

General Notes:

1. The product shown herein is designed, tested and manufactured to comply with the wind load criteria of the adopted International Building Code(IBC), the International Residential Code(IRC), the Texas Revisions and the industry requirement for the stated conditions.
2. All glazing shall conform to ASTM E1300.
3. At minimum, glazing shall be 5.0mm annealed insulating glass.
4. Use structural or composite shims where required.

This schedule addresses only the fasteners required to anchor the window to achieve the rated design pressure up to the size limitations noted. It is not intended as a guide to the installation process and does not address he sealing consideration that may arise in different wall conditions. For the complete installation procedure, see the instructions packaged with the window or go to www.jeld-wen.com.

DISCLAIMER:
This drawing and its contents are confidential and are not to be reproduced or copied in whole or in part or used or disclosed to others except as authorized by JELD-WEN Inc.

STATE OF TEXAS
HERMES F. NORERO
118471
PROFESSIONAL ENGINEER
398 East Dania Beach Blvd., Suite 338
Dania Beach, FL 33004

PROJECT ENGINEER: --	DATE: 11/09/2015	JELD-WEN	3737 Lakeport Blvd Klamath Falls, OR. 97601 Phone: (800) 535-3936	
DRAWN BY: D. Vezo	SCALE: NTS			
CHECKED BY: J. Goossen	TITLE: Premium Atlantic Vinyl Horizontal Slider			
APPROVED BY: --				
PART/PROJECT No.: D009345				
IDENTIFIER No. NCTL 210-4010-01A	PLANT NAME AND LOCATION:	CAD DWG. No.:	REV: 00	SHEET 3 OF 4

STEEL INSTALLATION

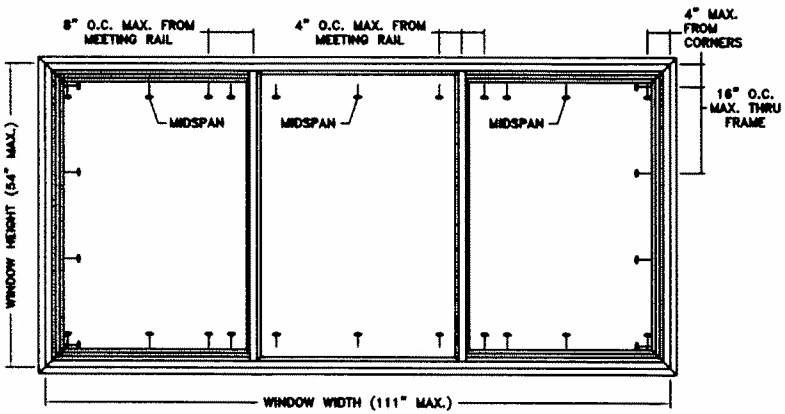

TYPICAL ELEVATION WITH FASTENER SPACING

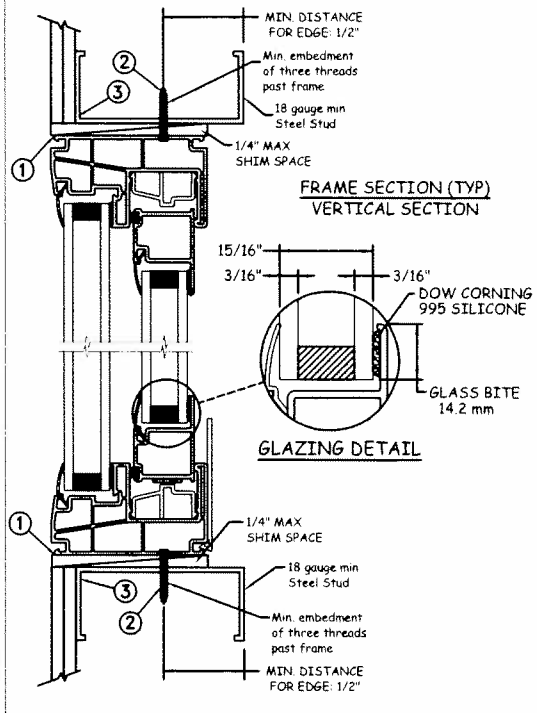

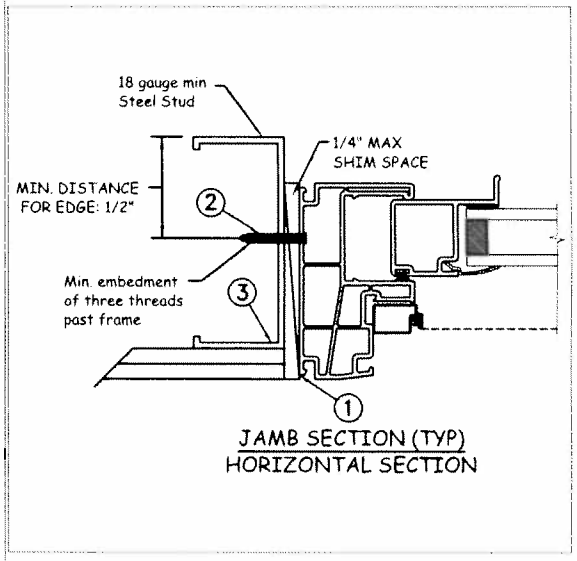

Max Frame	DP RATING	IMPACT
111" x 54"	+50/-55	NO

Installation Notes:

1. Seal flange/frame to substrate.
2. For anchoring into metal framing use #10 TEK Self Tapping screws with sufficient length to achieve a minimum embedment of three threads past the frame thickness. Steel substrate min. 18ga., fy = 33 ksi.
3. Host structure (wood buck, masonry, steel) to be designed and anchored to properly transfer all loads to the structure. The host structure is the responsibility of the architect or engineer of record for the project of installation.

General Notes:

1. The product shown herein is designed, tested and manufactured to comply with the wind load criteria of the adopted International Building Code(IBC), the International Residential Code(IRC), the Texas Revisions and the industry requirement for the stated conditions.
2. All glazing shall conform to ASTM E1300.
3. At minimum, glazing shall be 5.0mm annealed insulating glass.
4. Use structural or composite shims where required.

This schedule addresses only the fasteners required to anchor the window to achieve the rated design pressure up to the size limitations noted. It is not intended as a guide to the installation process and does not address he sealing consideration that may arise in different wall conditions. For the complete installation procedure, see the instructions packaged with the window or go to www.jeld-wen.com.

DISCLAIMER:
This drawing and its contents are confidential and are not to be reproduced or copied in whole or in part or used or disclosed to others except as authorized by JELD-WEN Inc.

STATE OF TEXAS
HERMES F. NORERO
118471
PROFESSIONAL ENGINEER

PROJECT ENGINEER: --	DATE: 11/09/2015	JELD-WEN	3737 Lakeport Blvd Klamath Falls, OR. 97601 Phone: (800) 535-3936
DRAWN BY: D. Vezo	SCALE: NTS		
CHECKED BY: J. Goossen	TITLE: Premium Atlantic Vinyl Horizontal Slider		
APPROVED BY: --			
PART/PROJECT No.: D009345			
IDENTIFIER No. NCTL 210-4010-01A	PLANT NAME AND LOCATION:	CAD DWG. No.:	REV: 00 / SHEET 4 OF 4