WINCORE™
WINDOWS & DOORS
250 Staunton Turnpike, Parkersburg, WV 26104

5400S/7700/9900 Series Vinyl Awning Window

"NON-IMPACT"

PRODUCT EVALUATION
This product has been submitted to the Texas Department of Insurance (TDI) for review: TDI Submittal ID #6322

STATE OF TEXAS
LYNDON F. SCHMIDT
104123
LICENSED PROFESSIONAL ENGINEER
6.1.16

EVALUATED FOR USE IN THE STATE OF TEXAS

The Wincore Awning Window described herein complies with the 2006 International Residential Code (IRC), Sections R301 & R613 and the 2006 International Building Code (IBC), Sections 1405.12, 1609, 1714.5, 2403 and 2404 (including Texas revisions) subject to the following conditions:

1. Anchors shall be as listed and spaced as shown in the details. Anchor embedment to base material shall be beyond wall dressing or stucco.
2. When used in areas requiring wind-borne debris protection this product is required to be protected with an impact resistant covering that complies with Section R301.2.1.2 of the IRC and Section 1609.1.2 of the IBC.
3. Allowable design pressure requirements must be equal to or less than the design pressure rating shown in the design pressure chart, sheet 1 of this drawing.
4. Conditions not covered by this drawing are subject to further engineering analysis.

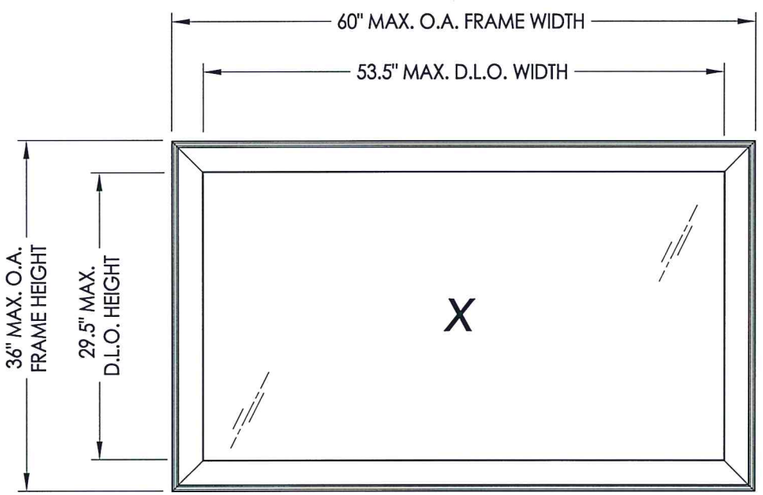

MAX. FRAME DIMENSION	MAX. D.L.O. DIMENSION	GLASS TYPE	DESIGN PRESSURE (PSF)	
			POSITIVE	NEGATIVE
60.0" X 36.0"	53.5" X 29.5"	G1, G2	+35.0	-35.0
36.0" X 36.0"	29.5" X 29.5"	G1, G2	+50.0	-50.0

TABLE OF CONTENTS

SHEET#	DESCRIPTION
1	Typical elevations, design pressures and general notes
2	Vertical & horizontal cross sections
3	Frame anchoring
4	Bill of materials, components and glazing detail

Documents Prepared By: Lyndon F. Schmidt, P.E.
TEXAS P.E. #104123
RW BUILDING CONSULTANTS, INC.
P.O. Box 230 Valrico FL. 33595
Phone No.: 813.659.9197
TEXAS BOARD OF PROFESSIONAL ENGINEERS
CERTIFICATE OF REGISTRATION # F-11852

PRODUCT: Vinyl Awning Window
PART OR ASSEMBLY: TYPICAL ELEVATION, DESIGN PRESSURES & GENERAL NOTES

NO.	DATE	REVISIONS	BY

DATE: 8/13/14
SCALE: N.T.S.
DWG. BY: JK
CHK. BY: LFS
DRAWING NO.: TX-4455
SHEET 1 OF 4

© 2014 R.W. BUILDING CONSULTANTS INC.

\\2012ess\rwbc\A - Projects\Project Folders\Proj 1701 - 1800\PF 1766\D. RWBC Drawings\TX-4455.dwg, TX-4455

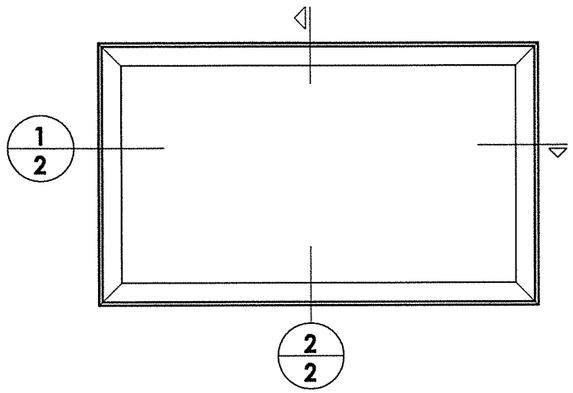

Note:
1. Locks located @ 10" from the bottom of each stile.

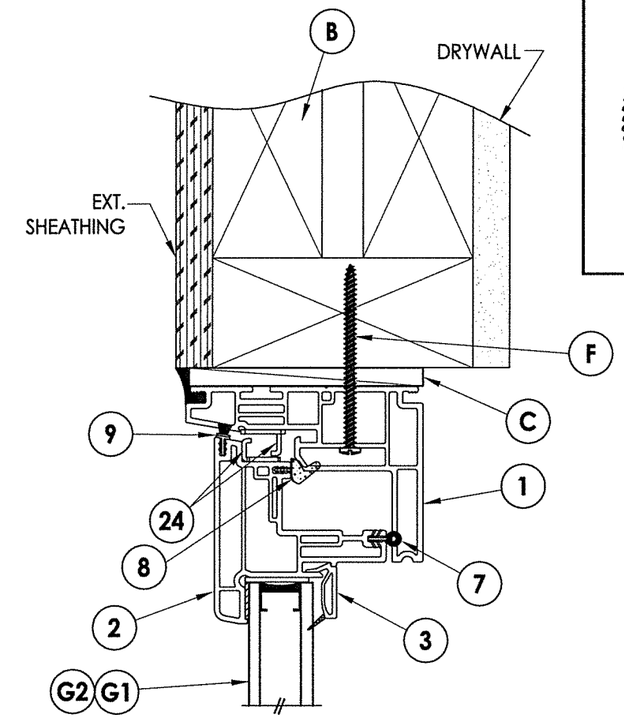

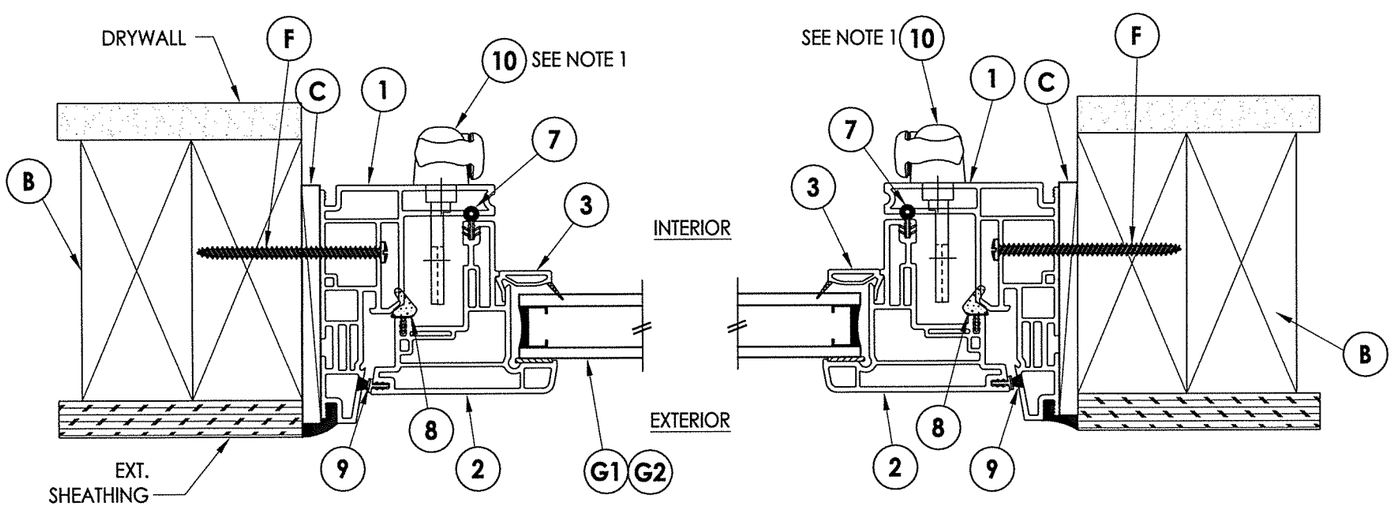

1/2 **HORIZONTAL CROSS SECTION**

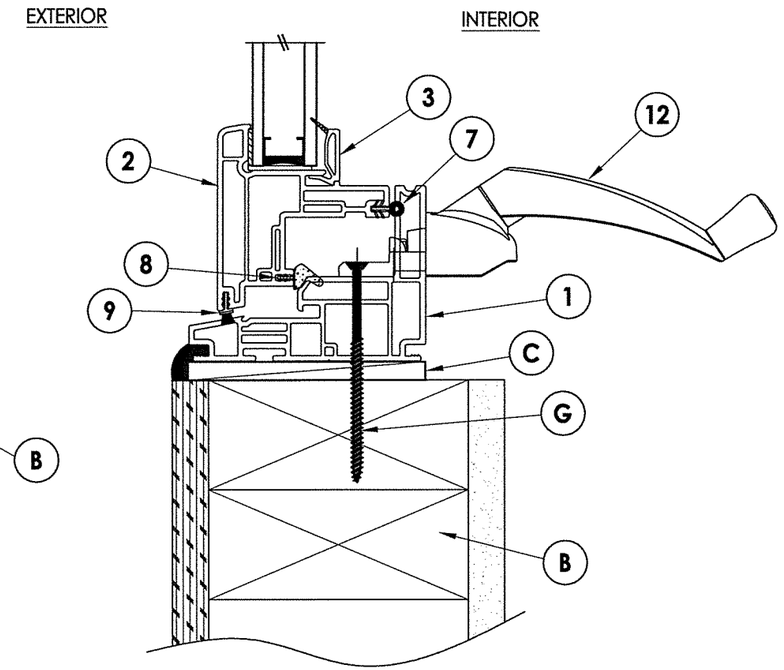

2/2 **VERTICAL CROSS SECTION**

STATE OF TEXAS
LYNDON F. SCHMIDT
104123
LICENSED PROFESSIONAL ENGINEER

Documents Prepared By: Lyndon F. Schmidt, P.E.
TEXAS P.E. #104123

RW BUILDING CONSULTANTS, INC.
P.O. Box 230 Valrico FL. 33595
Phone No.: 813.659.9197

TEXAS BOARD OF PROFESSIONAL ENGINEERS
CERTIFICATE OF REGISTRATION # F-11852

PRODUCT: *Vinyl Awning Window*

PART OR ASSEMBLY: *VERTICAL & HORIZONTAL CROSS SECTIONS*

NO.	DATE	REVISIONS	BY

DATE: 8/13/14
SCALE: N.T.S.
DWG. BY: JK
CHK. BY: LFS
DRAWING NO.: TX-4455
SHEET 2 OF 4

© 2014 R.W. BUILDING CONSULTANTS INC.

\\2012ess\rwbc\A - Projects\Project Folders\Proj 1701 - 1800\PF 1766\D. RWBC Drawings\TX-4455.dwg, 2

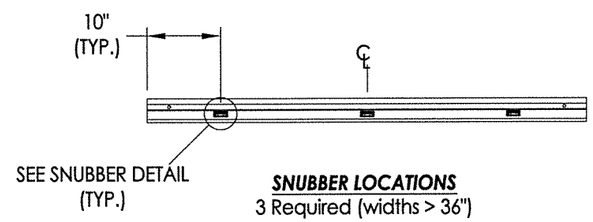

SNUBBER LOCATIONS
3 Required (widths > 36")

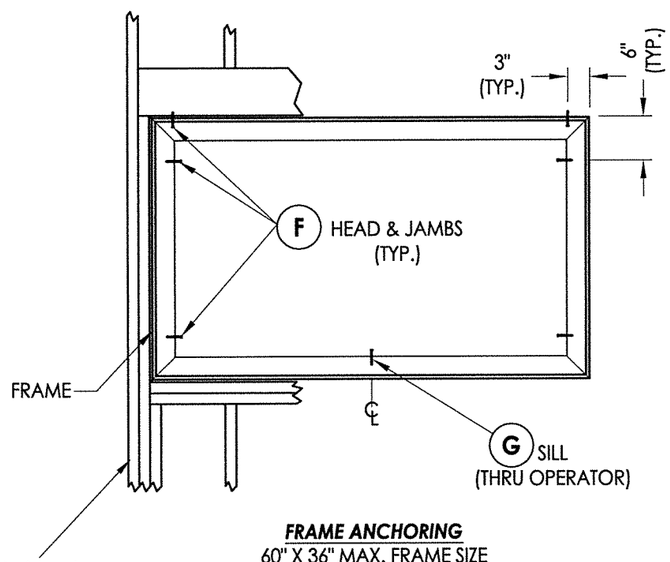

FRAME ANCHORING
60" X 36" MAX. FRAME SIZE

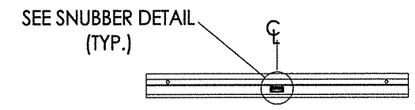

SNUBBER LOCATIONS
1 Required @ midspan (widths <= 36")

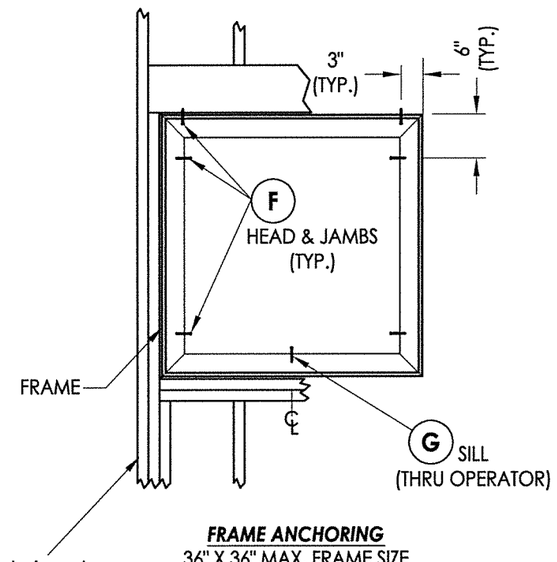

FRAME ANCHORING
36" X 36" MAX. FRAME SIZE

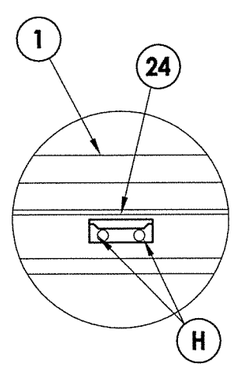

SNUBBER DETAIL

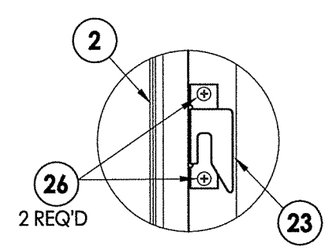

KEEPER DETAIL
Located 10" above bottom
of each sash

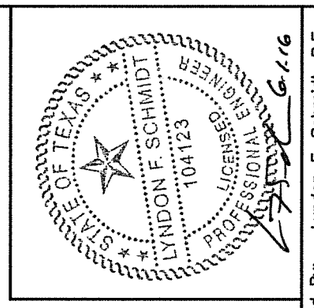

Documents Prepared By: Lyndon F. Schmidt, P.E.
TEXAS P.E. #104123
RW BUILDING CONSULTANTS, INC.
P.O. Box 230 Valrico FL. 33595
Phone No.: 813.659.9197
TEXAS BOARD OF PROFESSIONAL ENGINEERS
CERTIFICATE OF REGISTRATION # F-11852

PRODUCT: *Vinyl Awning Window*

PART OR ASSEMBLY: *FRAME ANCHORING*

NO.	DATE	BY

REVISIONS

DATE: 8/13/14
SCALE: N.T.S.
DWG. BY: JK
CHK. BY: LFS
DRAWING NO.: TX-4455
SHEET 3 OF 4

© 2014 R.W. BUILDING CONSULTANTS INC.

\\2012ess\rwbc\A - Projects\Project Folders\Proj 1701 - 1800\PF 1766\D. RWBC Drawings\TX-4455.dwg, 3

BILL OF MATERIALS		
ITEM #	DESCRIPTION	MATERIAL
B	2X FRAMING (SG >= 0.42)	WOOD
C	1/4" MAX. SHIM SPACE	-
F	#8 X 2-1/2" PPH WOOD SCREW	STEEL
G	#8 X 3" PFH WOOD SCREW	STEEL
H	#8 X 5/8" PFH SMS	STEEL
1	FRAME*	PVC
2	SASH*	PVC
3	GLAZING BEAD*	PVC
7	WEATHERSTRIP AMESBURY (CS 120 33-SEAL)	FOAM
8	WEATHERSTRIP AMESBURY (12300 SEAL)	VINYL
9	WEATHERSTRIP ULTRA FAB .250 (PILE - 250 - KP52)	VINYL
10	MULTI-POINT LOCK (TRUTH) 24.33.32.004	-
12	OPERATOR (TRUTH) 50.10.00.011	-
23	KEEPER (TRUTH)	STEEL
24	SNUBBER (TRUTH) (SASH/FRAME) 22999	-
26	#8 X 1/2" TRUSS HEAD SMS	STEEL

* THE APPROVED WHITE RIGID PVC EXTERIOR EXTRUSIONS FOR WINDOWS ARE TO BE PRODUCED BY EXTRUDERS LICENSEES IN "AAMA CERTIFICATION PROGRAMS FOR RIGID PVC EXTRUSIONS".

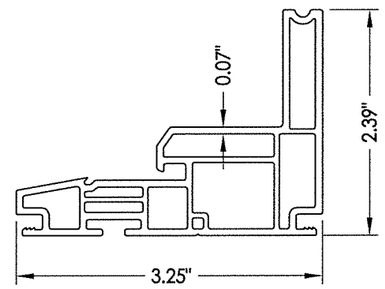

1 FRAME

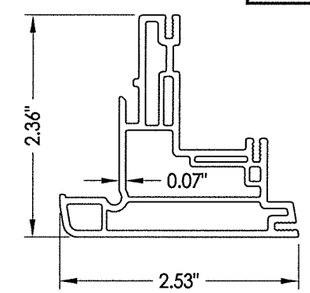

2 SASH

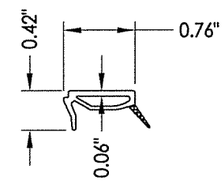

3 GLAZING BEAD

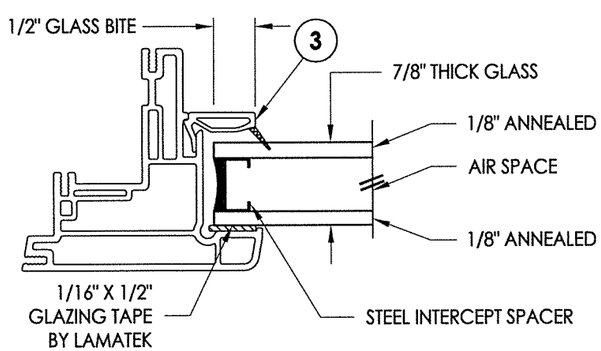

G1 GLAZING DETAIL
(See General Note 2, Sheet 1)

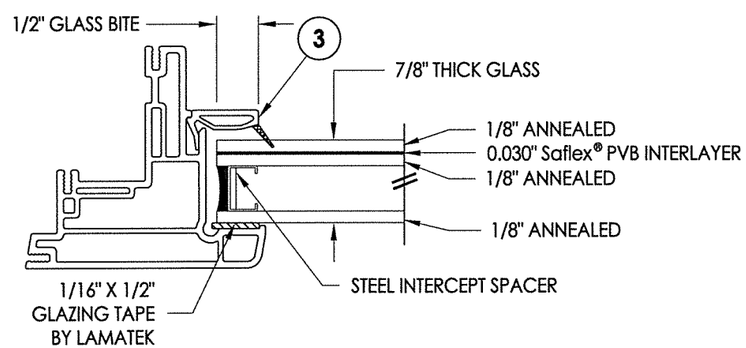

G2 GLAZING DETAIL
(See General Note 2, Sheet 1)

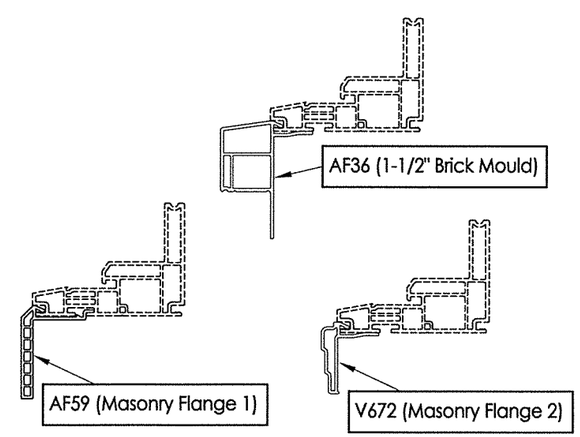

OPTIONAL COSMETIC FLANGES

STATE OF TEXAS
LYNDON F. SCHMIDT
104123
LICENSED PROFESSIONAL ENGINEER
6/16

Documents Prepared By: Lyndon F. Schmidt, P.E.
TEXAS P.E. #104123

RW BUILDING CONSULTANTS, INC.
P.O. Box 230 Valrico FL. 33595
Phone No.: 813.659.9197

TEXAS BOARD OF PROFESSIONAL ENGINEERS
CERTIFICATE OF REGISTRATION # F-11852

PRODUCT: Vinyl Awning Window

PART OR ASSEMBLY: BILL OF MATERIALS, COMPONENTS AND GLAZING DETAILS

NO.	DATE	REVISIONS	BY

DATE: 8/13/14
SCALE: N.T.S.
DWG. BY: JK
CHK. BY: LFS
DRAWING NO.: TX-4455
SHEET 4 OF 4

© 2014 R.W. BUILDING CONSULTANTS INC.

\\2012ess\rwbc\A - Projects\Project Folders\Proj 1701 - 1800\PF 1766\D. RWBC Drawings\TX-4455.dwg, 4