REVISIONS			
REV	DESCRIPTION	DATE	APPROVED
A	REVISED NOTE 5	11/21/11	R.L.

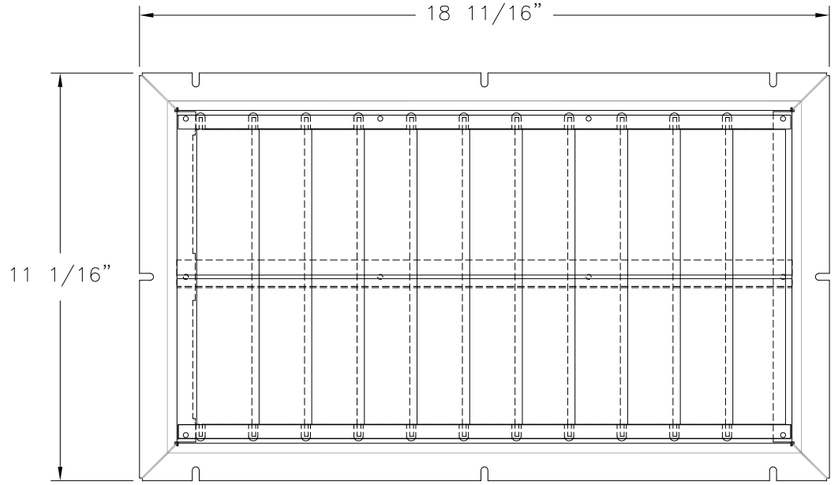

VIEW FROM BELOW SOFFIT
VANES CLOSED (GRILL AND SCREEN NOT SHOWN FOR CLARITY)

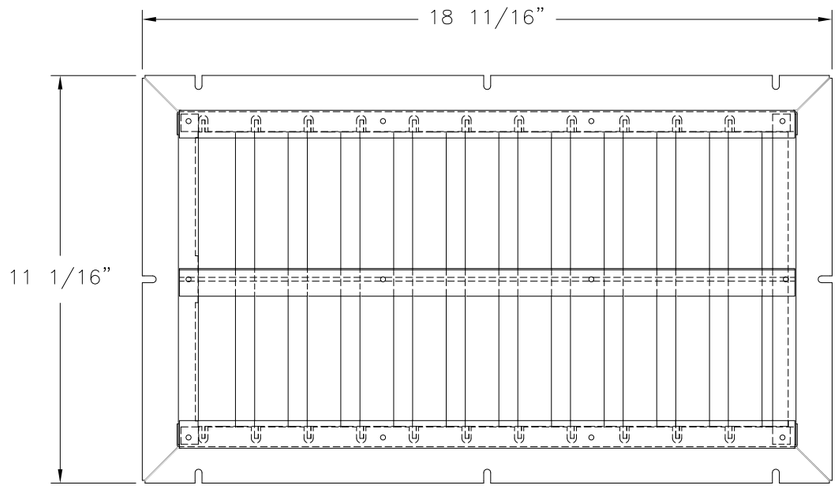

VIEW FROM ABOVE SOFFIT
VANES OPEN

BPA SAFETY VENT

DESIGN PRESSURE RATING	*IMPACT RATING*
±80PSF	*NONE*

NOTES:

1) THE PRODUCT SHOWN HEREIN IS DESIGNED AND MANUFACTURED TO COMPLY WITH REQUIREMENTS OF THE 2006 INTERNATIONAL BUILDING CODE AND 2006 INTERNATIONAL RESIDENTIAL CODE WITH STATE OF TEXAS MODIFICATIONS.
2) WOOD FRAMING AND PLYWOOD SOFFIT TO BE DESIGNED AND ANCHORED TO PROPERLY TRANSFER ALL LOADS TO STRUCTURE. FRAMING AND PLYWOOD SOFFIT IS THE RESPONSIBILITY OF THE ARCHITECT OR ENGINEER OF RECORD.
3) FOR ANCHORING INTO PLYWOOD USE #6 WOOD SCREWS WITH SUFFICIENT LENGTH TO ACHIEVE A 15/32" MINIMUM EMBEDMENT INTO SUBSTRATE. LOCATE ANCHORS AS SHOWN IN ELEVATIONS AND INSTALLATION DETAILS.
4) ALL FASTENERS TO BE CORROSION RESISTANT.
5) INSTALLATION ANCHORS SHALL BE INSTALLED IN ACCORDANCE WITH ANCHOR MANUFACTURER'S INSTALLATION INSTRUCTIONS, AND ANCHORS SHALL NOT BE USED IN SUBSTRATES WITH STRENGTHS LESS THAN THE MINIMUM STRENGTH SPECIFIED BELOW:
   A. WOOD – MINIMUM SPECIFIC GRAVITY OF G=0.42 (PLYWOOD CDX GROUP 2, 1/2" MIN. THICKNESS.)
6) BPA SAFETY VENT SHALL BE MOUNTED HORIZONTALLY AND POSITIONED CLOSE TO WALL WITH LONG AXIS PARALLEL TO WALL. SEE SHEET 2.
7) GRILL MUST COMPLY WITH CODE REQUIREMENTS.

SIGNED: 11/21/2011

TABLE OF CONTENTS

SHEET NO.	DESCRIPTION
1	ELEVATION AND NOTES
2	INSTALLATION DETAILS

BUILDING PERFORMANCE AMERICAS USA INC
9415 DISCOVERY TERRACE #202
BRADENTON, FL 34212

BPA SAFETY VENT

ELEVATION AND NOTES

DRAWN:	DWG NO.	REV
V.L.	08–01344	A

SCALE	DATE	SHEET
NTS	09/19/11	1 OF 2

Luis R. Lomas P.E.
TX No.: 101889

REVISIONS			
REV	DESCRIPTION	DATE	APPROVED
A	REVISED NOTE 5	11/21/11	R.L.

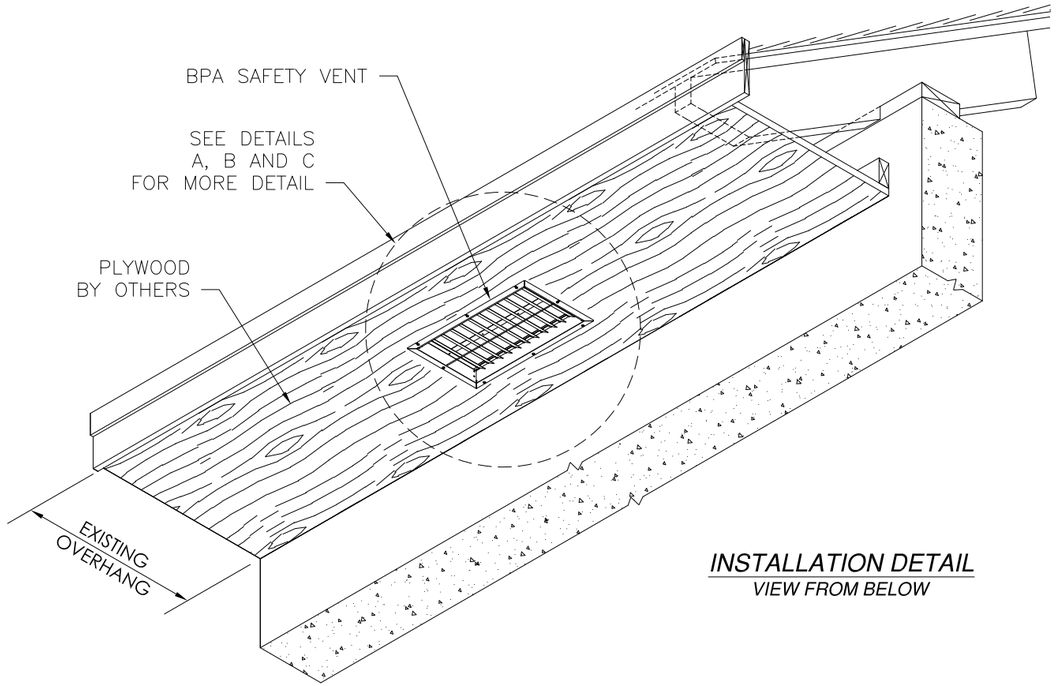

INSTALLATION DETAIL
VIEW FROM BELOW

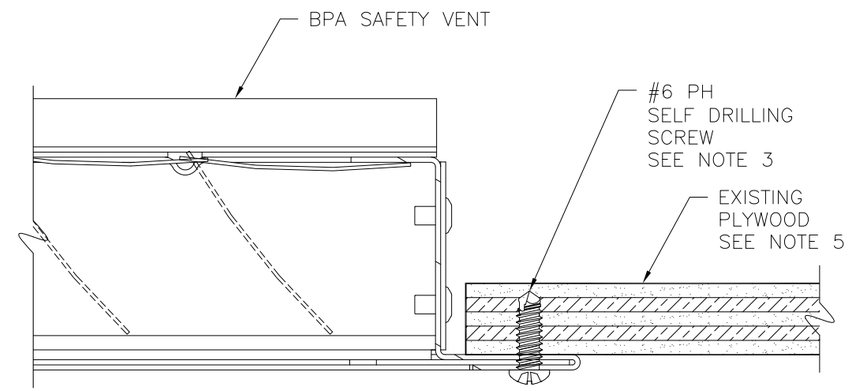

DETAIL C
CROSS SECTION INSTALLATION DETAIL

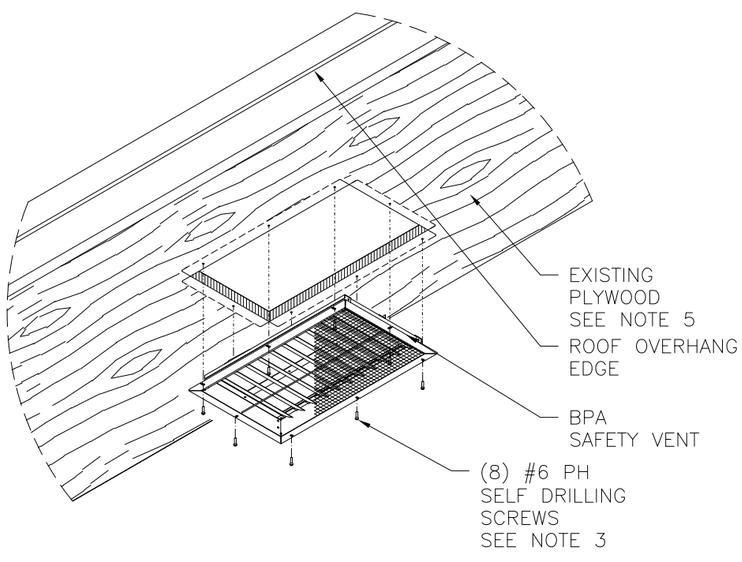

DETAIL A
VENT INSTALLATION VIEW FROM BELOW

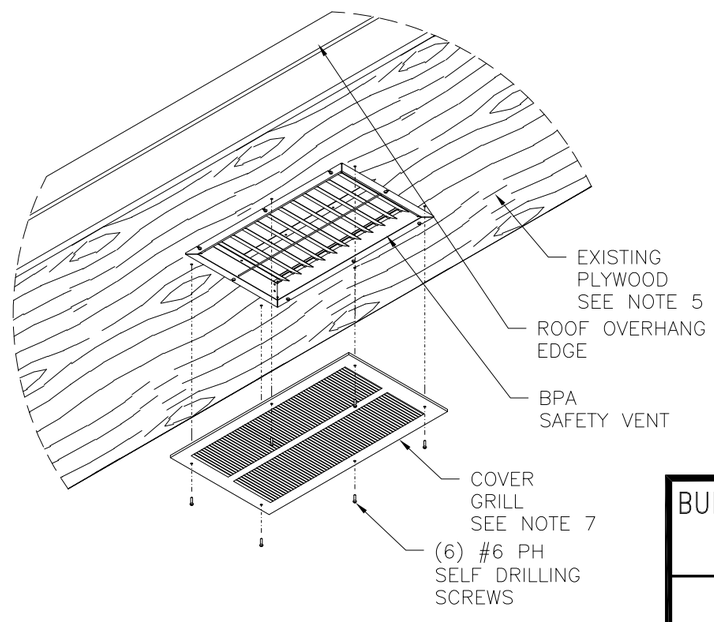

DETAIL B
GRILL INSTALLATION VIEW FROM BELOW

SIGNED: 11/21/2011

BUILDING PERFORMANCE AMERICAS USA INC
9415 DISCOVERY TERRACE #202
BRADENTON, FL 34212

BPA SAFETY VENT

INSTALLATION DETAILS

DRAWN:	DWG NO.	REV
V.L.	08-01344	A
SCALE NTS	DATE 09/19/11	SHEET 2 OF 2

Luis R. Lomas P.E.
TX No.: 101889