GENERAL NOTES: (IBC 2006 & IRC 2006 w/ 2006 TEXAS REVISIONS)

1- DEFINITION: THIS PRODUCT IS A HURRICANE PROTECTION DEVICE; DESIGNED, CONSTRUCTED AND ERECTED TO EASILY ENCLOSE AN AREA, PROVIDING PROTECTION FROM HURRICANE FORCE WINDS AND WIND BORNE DEBRIS WITHIN THE ALLOWABLE DESIGNED PRESSURES AND LIMITATIONS STATED IN THIS APPROVAL.

2- POSTING: A PERMANENT LABEL SHALL BE PROVIDED AS PER IBC 2006 SECTION 1703.5. IT SHALL BE PLACED ON A READILY VISIBLE LOCATION AND A MINIMUM OF ONE LABEL PER OPENING.

3- GLASS SEPARATION (GS): PRODUCT IS QUALIFIED AS "NON POROUS", THEREFORE GLAZING SEPARATION IS NOT REQUIRED WITH EXCEPTION FOR THE FOLLOWING LOCATIONS:
   3.1- WIND ZONE 4 AS DEFINED IN ASTM E 1996-05
   3.2- ESSENTIAL FACILITIES AS DEFINED IN ASCE 7
FOR THE ABOVE LOCATIONS THE PRODUCT MUST BE SEPARATED FROM GLAZING AREAS AS PER TABLE 1.

4- LOADS: DESIGNED LOAD CALCULATED BASED ON THE ASCE 7 AND PROVIDED BY A PROFESSIONAL ARCHITECT OR ENGINEER FOR EACH SPECIFIC PROJECT. THE CALCULATED DESIGNED PRESSURE MUST NOT EXCEED THE ALLOWABLE PRESSURES FOR EACH SHUTTER COMPONENT TO BE USED.

5- MATERIAL: ALL EXTRUDED ALUMINUM SHAPES SHALL BE MADE OF 6063-T6 OR AS NOTED.

6- FASTENERS: ASSEMBLY SCREWS AND ANCHORS SHALL BE CORROSION RESISTANT AS SPECIFIED IN SECTION R325 (IRC 2006 TEXAS REVISIONS) AND CHAPTER 17 (IBC 2006 TEXAS REVISIONS). ANCHORS ARE TO BE SELECTED BASED ON AREA LOCATION (SEAWARD, INLAND I OR INLAND II).

7- MULTIPLE SPAN SHUTTERS: REINFORCEMENTS SUCH AS STORM BARS, HEADER AND MULLIONS WERE DESIGNED BY RATIONAL ANALYSIS AND ARE PART OF THESE DRAWINGS. DUE TO MANY VARIATIONS OF REINFORCEMENTS, LOADS AND SHUTTER DIMENSIONS BECOME IMPRACTICAL ADDRESSING ALL CONDITIONS IN ONE SET OF DRAWINGS. THE CONDITIONS ADDRESSED IN THE PROPOSED DRAWINGS HAVE CONSERVATIVE LIMITATIONS IN ORDER TO FACILITATE THE DESIGN. SITE SPECIFIC CONDITIONS CAN BE ADDRESSED ON A JOB BASIS PROVIDED PROPER ENGINEERING.

8- USE: IT SHALL BE THE RESPONSIBILITY OF THE CONTRACTOR, ARCHITECT OR ENGINEER OF RECORD TO VERIFY THE FOLLOWING:
   8.1- THE STABILITY OF THE STRUCTURE WHERE THE SHUTTER IS TO BE ATTACHED INSURING PROPER ANCHORAGE.
   8.2- THE SITE SPECIFIC PROJECT CRITERIA, SUCH AS BUT NOT LIMITED TO, WIND LOADS, LOCAL CODE REQUIREMENTS, DESIGNED PRESSURES ETC.
   8.3- THAT THIS APPROVAL IS ADEQUATE TO THE SPECIFIC PROJECT.

9- INCREASE IN ALLOWABLE STRESS BY 33 1/3% HAVE NOT BEEN USED IN THE DESIGN OF THE ANCHORS FOR THIS PRODUCT APPROVAL.

CODE AND STANDARD COMPLIANCE:

INTERNATIONAL BUILDING CODE (IBC 2006) WITH TEXAS REVISIONS
INTERNATIONAL RESIDENTIAL CODE (IRC 2006) WITH TEXAS REVISIONS
ASTM E330, E1886, E1996 (LEVEL D MISSILE)

TYPICAL SHUTTER CONFIGURATIONS

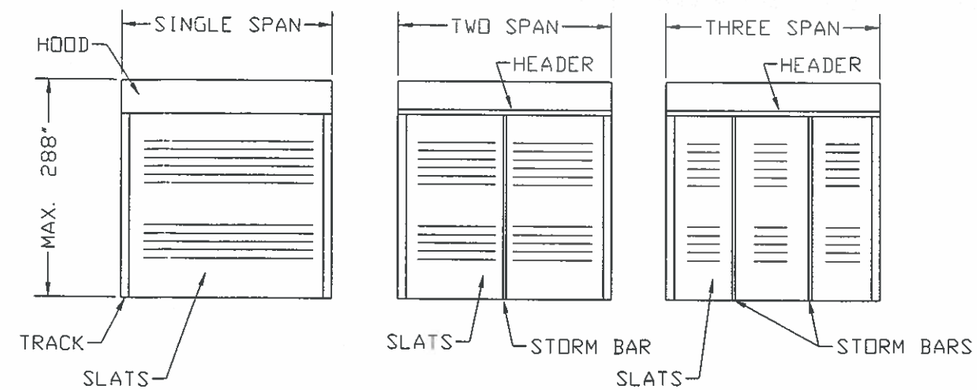

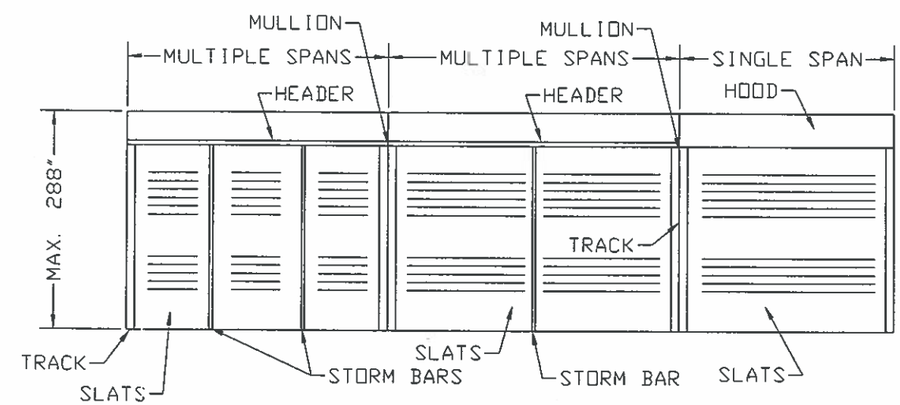

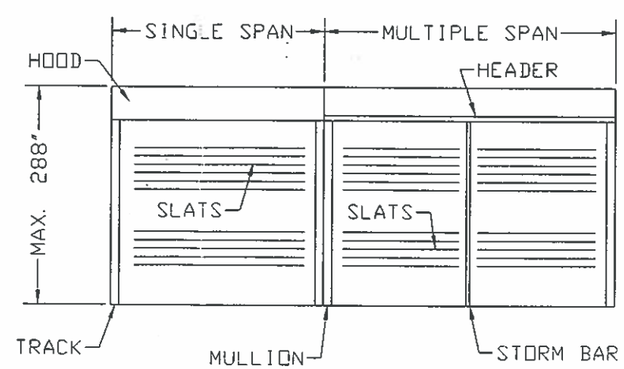

DESIGNED PRESSURE	
COMPONENT	REF. SHEET
SLAT DESIGN	2
TRACK ANCHORAGE	3-4
STORM BAR	5-8
HEADER	9-10
MULLION	11-17

ALLOWABLE DESIGNED PRESSURE FOR SHUTTERS ARE FUNCTION OF THE LOWEST ALLOWABLE DESIGNED LOAD FOR THE SLATS, TRACK ANCHORAGE, STORM BARS, HEADERS, MULLIONS.
USE REFERENCED SHEET ABOVE TO CALCULATED THE THE DESIGNED LOAD FOR EACH OF THE COMPONENTS

Manufacturer:
CROCI NORTH AMERICA
11600 ADELMO LANE
FORT MYERS, FL 33966
Tel.: (239) 278-3066
Fax: (239) 278-5977

PRODUCT:
ES 55 - ES 44
EXTRUDED ALUMINUM ROLLING SHUTTER

Engineering:
EngCo Inc.
CR 11234
5595 ORANGE DR. SUITE 201
DAVIE - FLORIDA 333314
www.engcoinc.com

STATE OF TEXAS
PEDRO FIGUEIREDO
102937
LICENSED PROFESSIONAL ENGINEER

MAR 17 2014

Engineer Seal
Pedro De Figueiredo
TEXAS - PE 102937

Date: 03/18/2013
Scale: NA
Design by: PPMF

REVISION:
REPLACE DWG 10-102

Drawing Number
13-070

TABLE 1 - SLAT DESIGN

ALLOWABLE PRESSURE ± PSF	ES 55 SLAT		ES 44 SLAT	
	MAX. SPAN	MIN. GS	MAX SPAN	MIN. GS
40	80	5. 75	51	5. 50
50	74	5. 75	48	5. 50
60	70	5. 25	44	5. 00
70	66	4. 75	41	5. 00
80	62	4. 50	38	5. 00
90	58	4. 50	36	5. 00
100	54	4. 50	34	5. 00
110	49	4. 50	32	5. 00
120	45	4. 50	30	5. 00
130	42	4. 50	28	5. 00
140	39	4. 50	26	5. 00
150	36	4. 50	24	5. 00

1- ALLOWABLE PRESSURE IN PSF
2- MAX. SPAN: MAXIMUM SLAT SPAN IN INCHES
3- MIN. GS: MINIMUM GLAZING SEPARATION ONLY APPLICABLE AS PER GENERAL NOTE 3

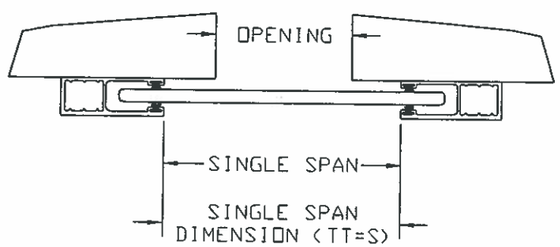

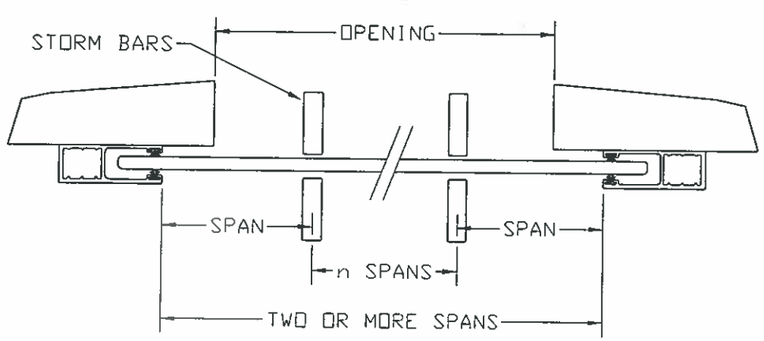

PRODUCT COMPONENTS

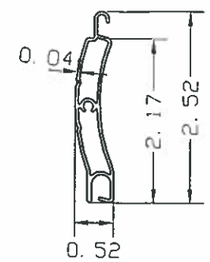

A1- ES55
SLAT BLADE
6063-T6 Alloy

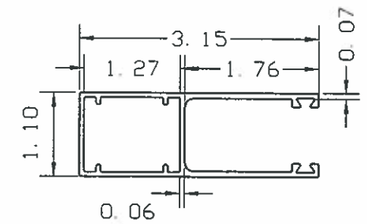

A2- GE458028 SIDE RAIL
COMPATIBLE WITH ES55,
6063-T6 ALLOY

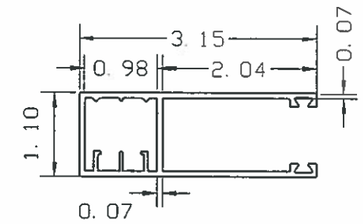

A21- GE8028 ALTERNATE SIDE
RAIL COMPATIBLE WITH ES55
6063-T6 ALLOY

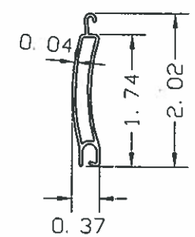

B1- ES44
SLAT BLADE
6063-T6 Alloy

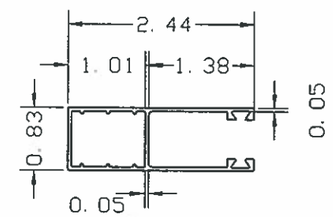

B2- GE62X21 SIDE RAIL
COMPATIBLE WITH ES44
6063-T6 ALLOY

1- TRACK FELT
FELT PILE

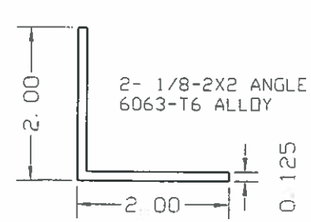

2- 1/8-2X2 ANGLE
6063-T6 ALLOY

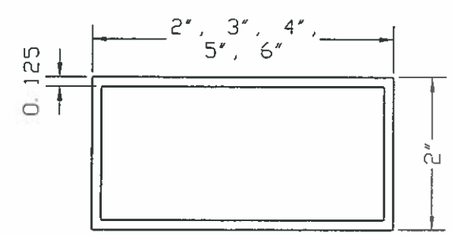

3- 1/8-2x ALUMINUM TUBE
6063-T6 Alloy

Manufacturer:
CROCI NORTH AMERICA
11600 ADELMO LANE
FORT MYERS, FL 33966
Tel.: (239) 278-3066
Fax: (239) 278-5977

PRODUCT:
ES 55 - ES 44
EXTRUDED ALUMINUM ROLLING SHUTTER

Engineering:
EngCo Inc.
CR 11234
5595 ORANGE DR. SUITE 201
DAVIE - FLORIDA 333314
www.engcoinc.com

STATE OF TEXAS
PEDRO FIGUEIREDO
102937
LICENSED PROFESSIONAL ENGINEER

MAR 17 2014

Engineer Seal
Pedro De Figueiredo
TEXAS - PE 102937

Date: 03/18/2013
Scale: NA
Design by: PPMF

REVISION:
REPLACE DWG 10-102

Drawing Number
13-070

E 55 - GUIDE RAILS MOUNTING OPTIONS

A- WALL MOUNT

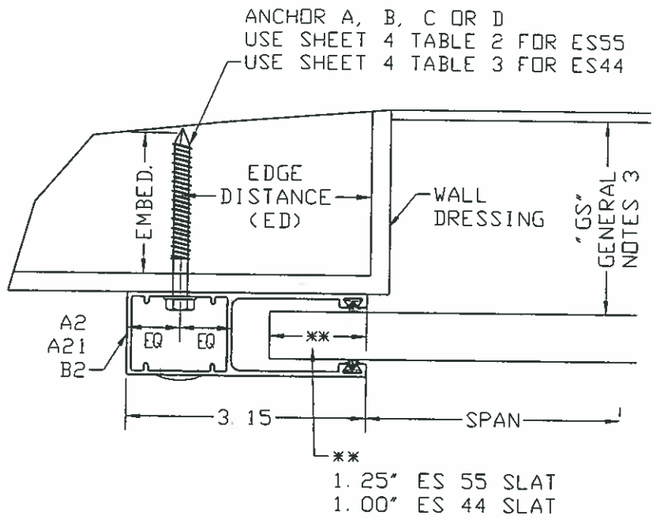

C- INSET MOUNT

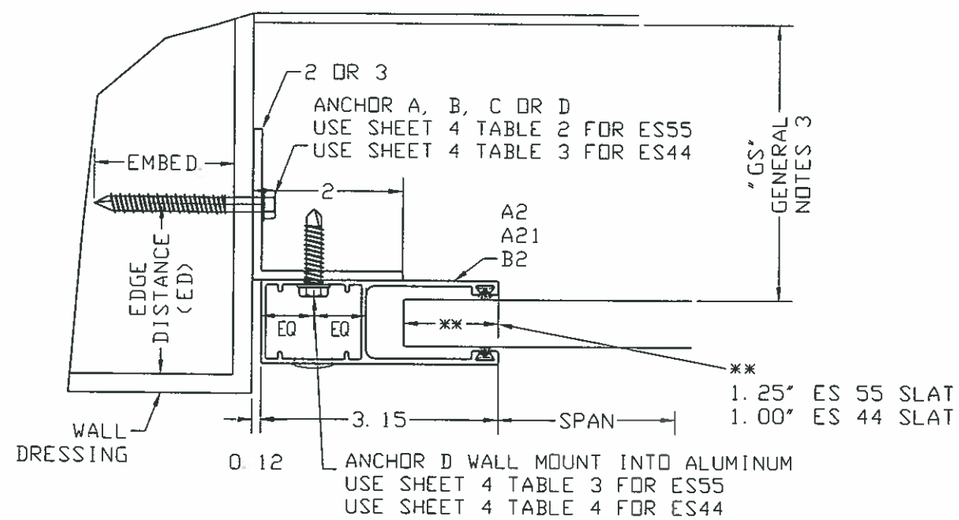

B- BUILT-OUT MOUNT

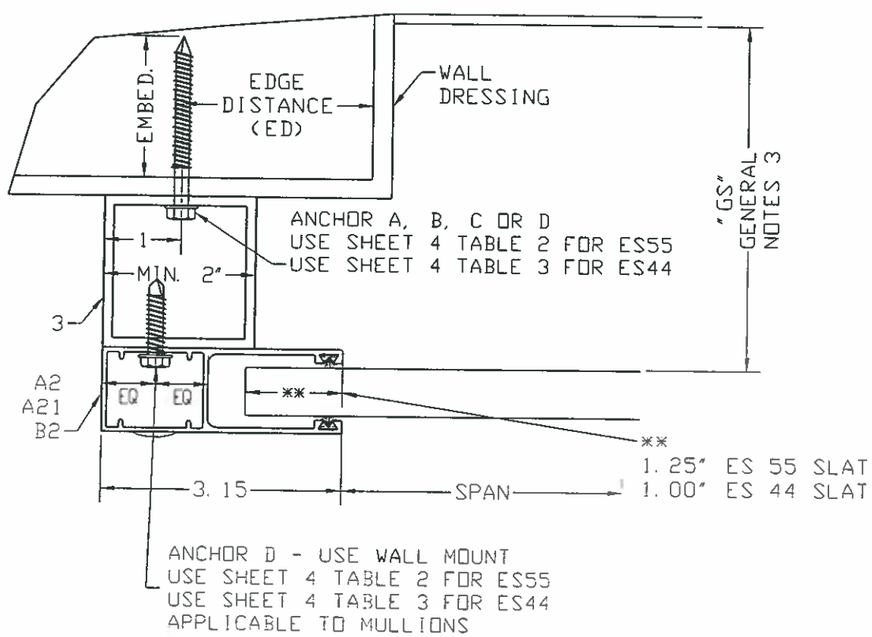

D- ALTERNATE INSET MOUNT

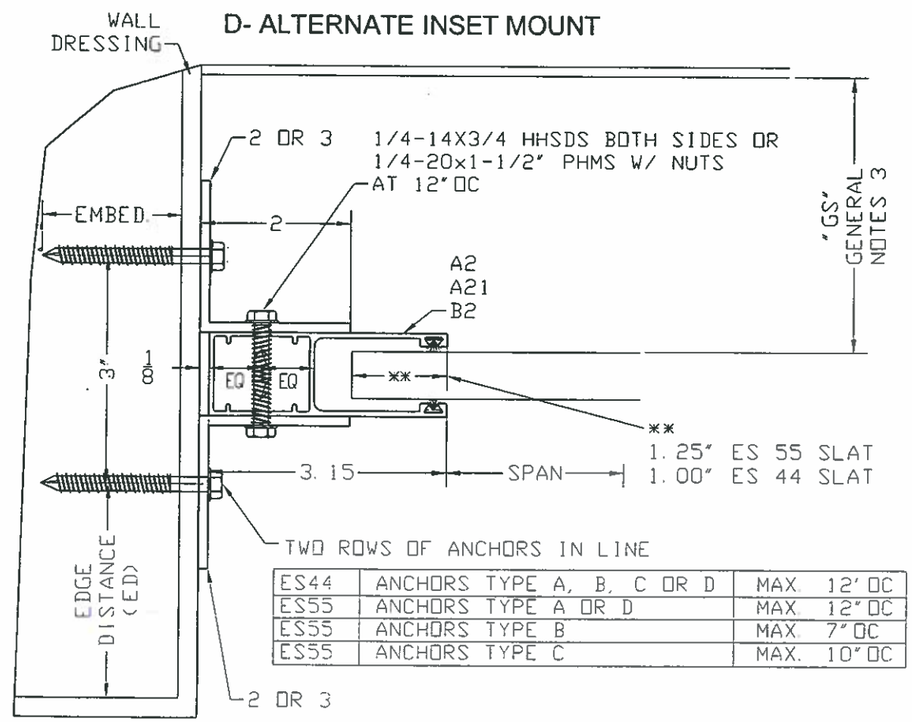

ES44	ANCHORS TYPE A, B, C OR D	MAX. 12" OC
ES55	ANCHORS TYPE A OR D	MAX. 12" OC
ES55	ANCHORS TYPE B	MAX. 7" OC
ES55	ANCHORS TYPE C	MAX. 10" OC

Manufacturer:
CROCI NORTH AMERICA
11600 ADELMO LANE
FORT MYERS, FL 33966
Tel.: (239) 278-3066
Fax: (239) 278-5977

PRODUCT:
ES 55 - ES 44
EXTRUDED ALUMINUM ROLLING SHUTTER

Engineering:
EngCo Inc.
CR 11234
5595 ORANGE DR. SUITE 201
DAVIE - FLORIDA 333314
www.engcoinc.com

STATE OF TEXAS
PEDRO FIGUEIREDO
102937
PROFESSIONAL ENGINEER
MAR 17 2014

Engineer Seal
Pedro De Figueiredo
TEXAS - PE 102937

Date: 03/18/2013
Scale: NA
Design by: PPMF

REVISION:
REPLACE DWG 10-102

Drawing Number
13-070

GUIDE RAILS ANCHORAGE DESIGN

TABLE 2 - ES 55 MAXIMUM TRACK ANCHORAGE SPACING

		GE458028 RAIL WALL MOUNT ANCHOR TYPE				BUILT-OUT MOUNT ANCHOR TYPE				INSET MOUNT ANCHOR TYPE				GE8028 RAIL WALL MOUNT ANCHOR TYPE			
Pd	SPAN	A	B	C	D	A	B	C	D	A	B	C	D	A	B	C	D
40	80	5	3	5	5	12	5	12	11	9	4	6	8	4	3	4	4
	60	7	5	7	7	12	7	12	12	12	5	9	11	6	4	6	6
	40	11	7	11	11	12	11	12	12	12	8	12	12	9	6	9	9
	30	12	10	12	12	12	12	12	12	12	11	12	12	12	8	12	12
60	80	3	-	3	3	8	3	8	7	6	-	4	5	3	-	3	3
	60	5	3	5	5	11	5	11	9	8	3	6	7	4	-	4	4
	50	6	4	6	6	12	6	12	11	10	4	7	9	5	3	5	5
	40	7	5	7	7	12	7	12	12	12	5	9	11	6	4	6	6
	30	10	7	10	10	12	10	12	12	12	7	12	12	8	5	8	8
80	80	-	-	-	-	6	-	6	5	4	-	3	4	-	-	-	-
	60	3	-	3	3	8	3	8	7	6	-	4	5	3	-	3	3
	50	4	3	4	4	10	4	10	8	7	3	5	7	3	-	3	3
	40	5	3	5	5	12	5	12	11	9	4	6	8	4	3	4	4
	30	7	5	7	7	12	7	12	12	12	5	9	11	6	4	6	6
100	60	3	-	3	3	6	3	6	5	5	-	3	4	-	-	-	-
	50	3	-	3	3	8	3	8	7	6	-	4	5	3	-	3	3
	40	4	3	4	4	10	4	10	8	7	3	5	7	3	-	3	3
	30	6	4	6	6	12	6	12	11	10	4	7	9	5	3	5	5
110	50	3	-	3	3	7	3	7	6	5	-	4	5	-	-	-	-
	40	4	-	4	4	9	4	9	8	6	3	5	6	3	-	3	3
	30	5	3	5	5	12	5	12	10	9	4	6	8	4	3	4	4
130	50	-	-	-	-	6	-	6	5	4	-	3	4	-	-	-	-
	40	3	-	3	3	7	3	7	6	5	-	4	5	-	-	-	-
	30	4	3	4	4	10	4	10	9	7	3	5	7	3	-	3	3
150	40	3	-	3	3	5	3	5	5	5	-	3	4	-	-	-	-
	36	3	-	3	3	6	3	6	6	5	-	4	5	-	-	-	-
	30	4	-	4	4	7	4	7	7	6	3	4	6	3	-	3	3

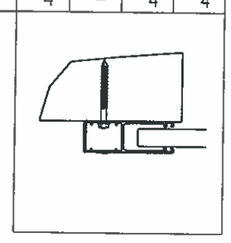
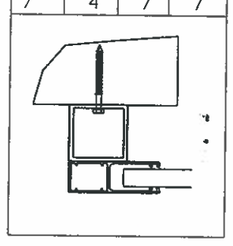
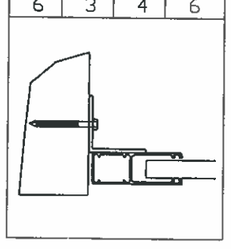
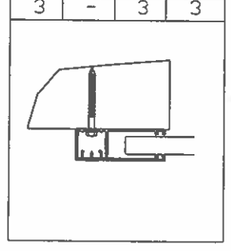

TABLE 3 - ES 44 MAXIMUM TRACK ANCHORAGE SPACING

		WALL MOUNT ANCHOR TYPE				BUILT-OUT MOUNT ANCHOR TYPE				INSET MOUNT ANCHOR TYPE			
Pd	SPAN	A	B	C	D	A	B	C	D	A	B	C	D
40	51	6	6	6	6	12	11	12	12	12	8	12	12
	42	8	7	8	8	12	12	12	12	12	10	12	12
	32	10	9	10	10	12	12	12	12	12	12	12	12
	24	12	12	12	12	12	12	12	12	12	12	12	12
60	48	4	4	4	4	9	8	9	9	9	6	8	9
	44	5	4	5	5	9	8	9	9	9	6	9	9
	42	5	4	5	5	10	9	10	10	10	6	10	10
	32	7	6	7	7	12	12	12	12	12	9	12	12
	24	9	8	9	9	12	12	12	12	12	12	12	12
80	48	3	3	3	3	6	6	6	6	6	4	6	6
	44	3	3	3	3	7	6	7	7	7	4	7	7
	42	4	3	4	4	7	7	7	7	7	5	7	7
	32	5	4	5	5	10	9	10	10	10	6	9	10
	24	7	6	7	7	12	12	12	12	12	9	12	12
100	44	3	-	3	3	6	5	6	6	6	3	5	6
	42	3	-	3	3	6	5	6	6	6	4	6	6
	32	4	3	4	4	8	7	8	8	8	5	7	8
	24	5	5	5	5	10	9	10	10	10	7	10	10
110	42	-	-	-	-	5	5	5	5	5	3	5	5
	32	3	3	3	3	7	6	7	7	7	4	7	7
	24	5	4	5	5	9	8	9	9	9	6	9	9
130	32	3	3	3	3	6	5	6	6	6	4	6	6
	28	3	3	3	3	7	6	7	7	7	4	7	7
	24	4	4	4	4	8	7	8	8	8	5	8	8
150	28	3	-	3	3	6	5	6	6	6	4	6	6
	26	3	3	3	3	6	6	6	6	6	4	6	6
	24	3	3	3	3	7	6	7	7	7	4	7	7

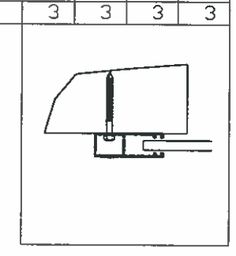
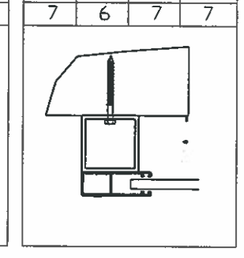
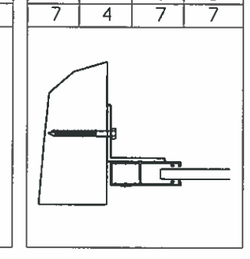

ANCHOR SCHEDULE

TYPE	DESCRIPTION	MANUFACTURER	EMBEDMENT	ED	BASE MATERIAL
A	1/4" ss TAPCON	ITW	1 3/4"	2 1/2"	3000 psi CONCRETE
B	1/4" ss TAPCON	ITW	1 1/4"	2 1/2"	HOLLOW BLOCK
C	1/4"-14 ss HHSMS	GENERIC	1 1/2"	1"	WOOD (SG>=.46)
D	1/4"-14 ss HHSMS	GENERIC	1/8"	3/4"	1/8" METAL STRUCTURE

ANCHOR NOTES:
1- 1/4" TAPCONS CAN BE USED AS TYPE C INTO WOOD
2- 1/4" CARBON STEEL TAPCONS CAN BE USED AS AN ALTERNATE TO THE STAINLESS STEEL
3- METAL STRUCTURES ARE MADE OF MINIMUM 6063-T6 ALUMINUM OR ASTM A36 STEEL

Manufacturer:
CROCI NORTH AMERICA
11600 ADELMO LANE
FORT MYERS, FL 33966
Tel.: (239) 278-3066
Fax: (239) 278-5977

PRODUCT:
ES 55 - ES 44
EXTRUDED ALUMINUM ROLLING SHUTTER

Engineering:
EngCo Inc.
CR 11234
5595 ORANGE DR. SUITE 201
DAVIE - FLORIDA 333314
www.engcoinc.com

STATE OF TEXAS
PEDRO FIGUEIREDO
102937
LICENSED PROFESSIONAL ENGINEER

MAR 17 2014

Engineer Seal
Pedro De Figueiredo
TEXAS - PE 102937

Date: 03/18/2013
Scale: NA
Design by: PPMF

REVISION:
REPLACE DWG 10-102

Drawing Number
13-070

TABLE 4- STORM BARS
ALLOWABLE DESIGN LOAD - Pd (Psf)

SS	SBH	STORM BAR TYPE				
		2X2	2X3	2X4	2X5	2X6
24	36	150	150	150	150	150
	48	150	150	150	150	150
	60	99	150	150	150	150
	72	57	135	150	150	150
	84	36	96	150	150	150
	96	24	64	114	150	150
	108	--	45	89	124	150
	120	--	32	66	100	131
30	36	150	150	150	150	150
	48	137	150	150	150	150
	60	79	150	150	150	150
	72	45	108	150	150	150
	84	28	76	120	150	150
	96	--	51	91	127	150
	108	--	36	71	99	131
	120	--	26	53	80	105
36	36	150	150	150	150	150
	48	114	150	150	150	150
	60	66	130	150	150	150
	72	38	90	137	150	150
	84	24	64	100	139	150
	96	--	42	76	106	139
	108	--	30	59	83	109
	120	--	21	44	66	87
48	36	110	110	110	110	110
	48	86	110	110	110	110
	60	49	97	110	110	110
	72	28	67	103	110	110
	84	--	48	75	104	110
	96	--	32	57	79	104
	108	--	22	44	62	82
	120	--	--	33	50	65
54	36	100	100	100	100	100
	48	76	100	100	100	100
	60	44	86	100	100	100
	72	25	60	91	100	100
	84	--	42	66	93	100
	96	--	28	50	70	93
	108	--	20	39	55	72
	120	--	--	29	44	58
60	36	85	85	85	85	85
	48	68	85	85	85	85
	60	39	78	85	85	85
	72	22	54	82	85	85
	84	--	38	60	83	85
	96	--	25	45	63	83
	108	--	--	35	49	65
	120	--	--	26	40	52
80	36	40	40	40	40	40
	48	40	40	40	40	40
	60	29	40	40	40	40
	72	--	40	40	40	40
	84	--	28	40	40	40
	96	--	--	34	40	40
	108	--	--	26	37	40
	120	--	--	20	30	39

STORM BAR NOTES:
1- SS SLAT SPAN, SBH: STORM BAR HEIGH
2- TABLES MUST WORK IN CONJUNCTION WITH MAXIMUM ALLOWABLE SLAT SPAN TABLES ON SHEET 2
3- THESE TABLES ARE FURTHER LIMITED BY TYPE OF ANCHORAGE USED
4- SPECIFIC CONDITIONS OUT OF THE SCOPE OF THESE TABLES CAN BE ADDRESSED WITH A SITE SPECIFIC DESIGN BY A PROFESSIONAL ENGINEER

STORM BARS MOUNTING OPTIONS

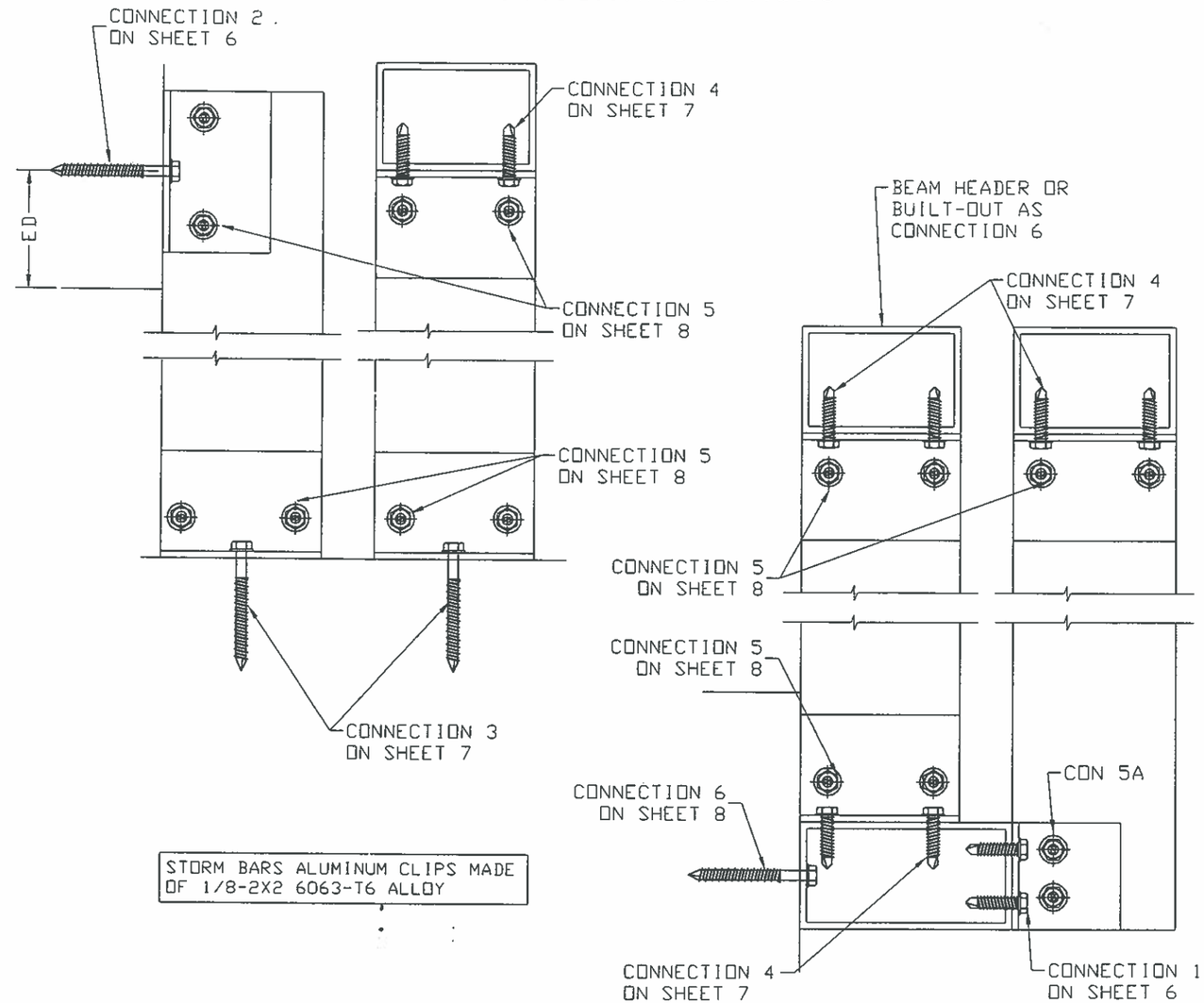

STORM BARS ALUMINUM CLIPS MADE OF 1/8-2X2 6063-T6 ALLOY

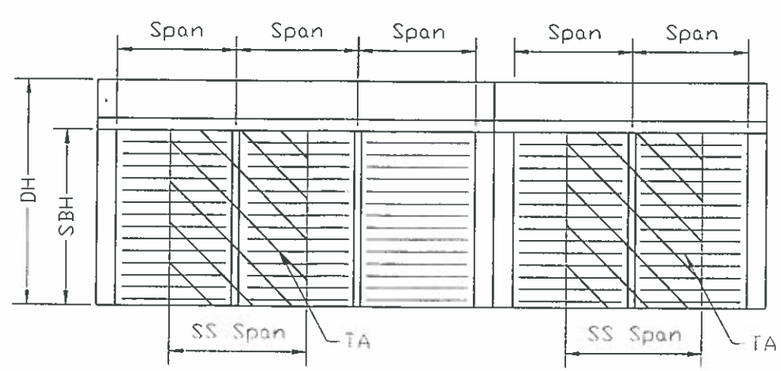

SS - SLAT SPAN
DH - DOOR HEIGHT
SBH - STORM BAR HEIGHT
TA - STORM BAR TRIBUTARY AREA

Manufacturer:
CROCI NORTH AMERICA
11600 ADELMO LANE
FORT MYERS, FL 33966
Tel.: (239) 278-3066
Fax: (239) 278-5977

PRODUCT:
ES 55 - ES 44
EXTRUDED ALUMINUM ROLLING SHUTTER

Engineering:
EngCo Inc.
CR 11234
5595 ORANGE DR. SUITE 201
DAVIE - FLORIDA 333314
www.engcoinc.com

STATE OF TEXAS
PEDRO FIGUEIREDO
102937
LICENSED PROFESSIONAL ENGINEER
MAR 17 2014

Engineer Seal
Pedro De Figueiredo
TEXAS - PE 102937

Date: 03/18/2013
Scale: NA
Design by: PPMF

REVISION:
REPLACE DWG 10-102

Drawing Number
13-070

Sheet
5 of 18

CONNECTION 1
STORM BARS ANCHORAGE
WALL MOUNTED TO ALUMINUM TUBE

TYPICAL FOR
2X2 OR 2X3
STORM BAR

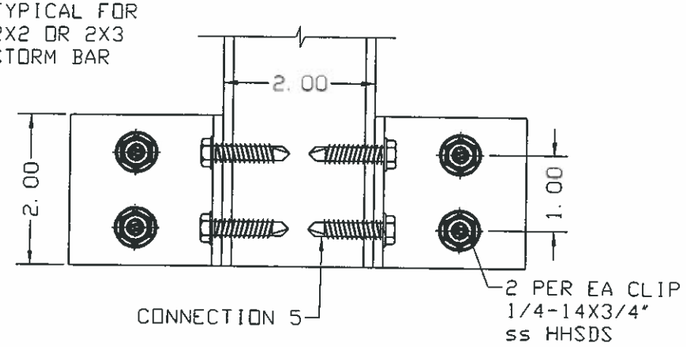

TYPICAL FOR
FOR 2X4, 2x5 OR
2x6 STORM BAR

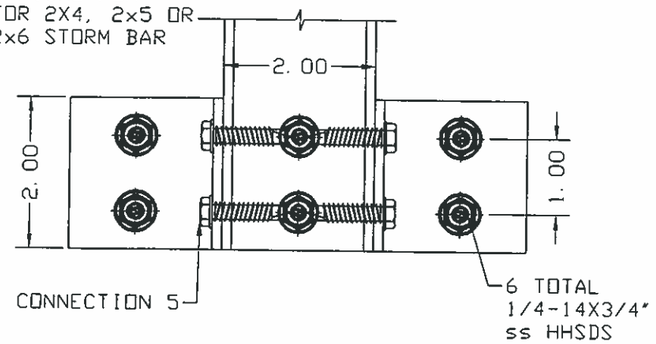

OPTIONAL CONNECTION
FOR 2X4, 2x5 OR
2x6 STORM BAR

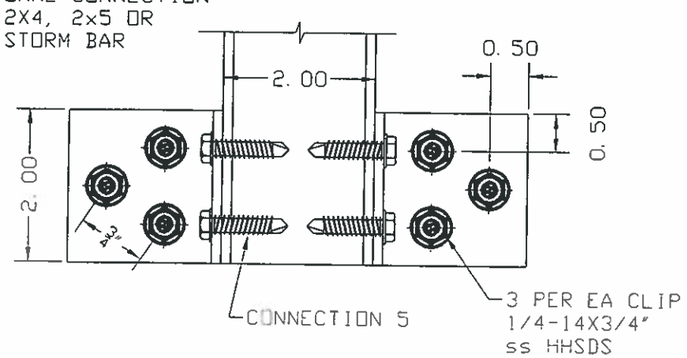

CONNECTION CAPACITY IS LIMITED TO THE MAXIMUM ALLOWABLE PRESSURES SPECIFIED AT TABLE 4 ON SHEET 5

CONNECTION 2
STORM BARS ANCHORAGE
TO WALL

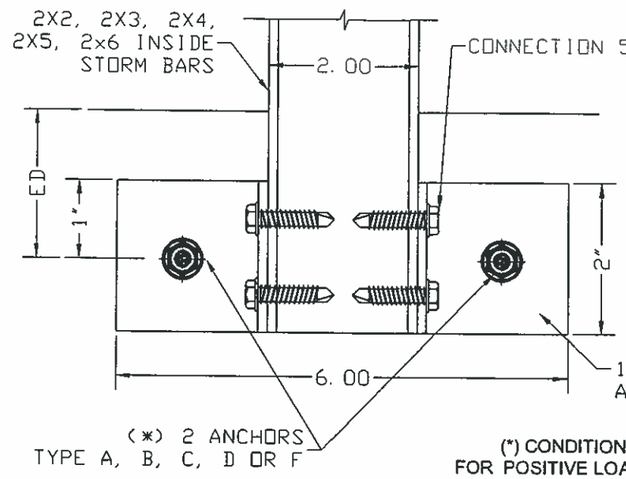

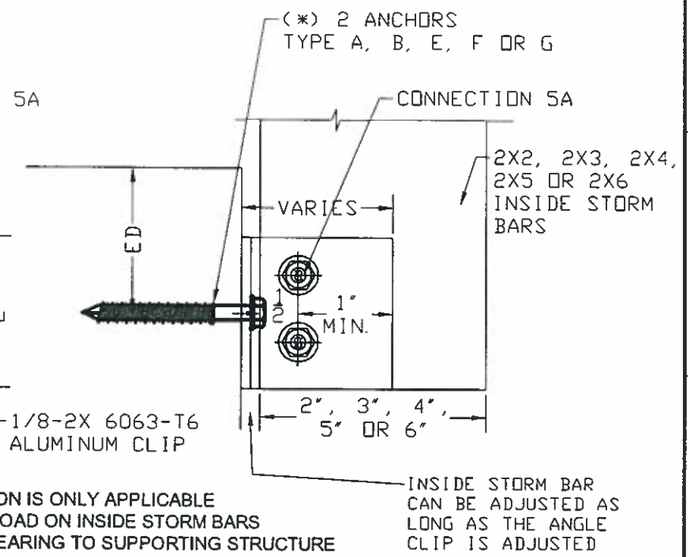

(*) CONDITION IS ONLY APPLICABLE
FOR POSITIVE LOAD ON INSIDE STORM BARS
LOAD TRANFERED BY BEARING TO SUPPORTING STRUCTURE

ANCHOR SCHEDULE

TYPE	DESCRIPTION	MANUFACTURER	EMBEDMENT	ED	BASE MATERIAL
A	1/4" ss TAPCON	ITW	1 3/4"	2 1/2"	3000 psi CONCRETE
B	1/4" ss TAPCON	ITW	1 1/4"	2 1/2"	HOLLOW BLOCK
C	1/4"-14 ss HHSMS	GENERIC	1 1/2"	1"	WOOD (SG>=.46)
D	1/4"-14 ss HHSMS	GENERIC	1/8"	3/4"	1/8" METAL STRUCTURE
F	1/4"-20 ss SOLID-SET	ALL POINTS	1"	2 1/2"	3000 psi CONCRETE

ANCHOR NOTES:
1- 1/4" TAPCONS CAN BE USED AS TYPE C INTO WOOD
2- 1/4" CARBON STEEL TAPCONS CAN BE USED AS AN ALTERNATE TO THE STAINLESS STEEL
3- METAL STRUCTURES ARE MADE OF MINIMUM 6063-T6 ALUMINUM OR ASTM A36 STEEL

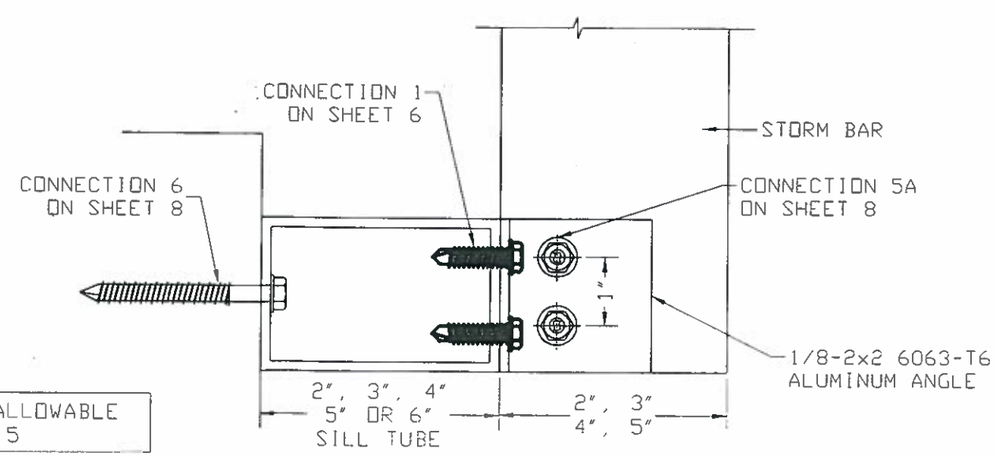

Manufacturer:
CROCI NORTH AMERICA
11600 ADELMO LANE
FORT MYERS, FL 33966
Tel.: (239) 278-3066
Fax: (239) 278-5977

PRODUCT:
ES 55 - ES 44
EXTRUDED ALUMINUM
ROLLING SHUTTER

Engineering:
EngCo Inc.
CR 11234
5595 ORANGE DR. SUITE 201
DAVIE - FLORIDA 333314
www.engcoinc.com

STATE OF TEXAS
PEDRO FIGUEIREDO
102937
LICENSED
PROFESSIONAL ENGINEER

MAR 17 2014

Engineer Seal
Pedro De Figueiredo
TEXAS - PE 102937

Date: 03/18/2013
Scale: NA
Design by: PPMF

REVISION:
REPLACE D.G 10-102

Drawing Number
13-070

CONNECTION 3 - STORM BARS ANCHORAGE FLOOR/CEILING MOUNTED TO CONCRETE

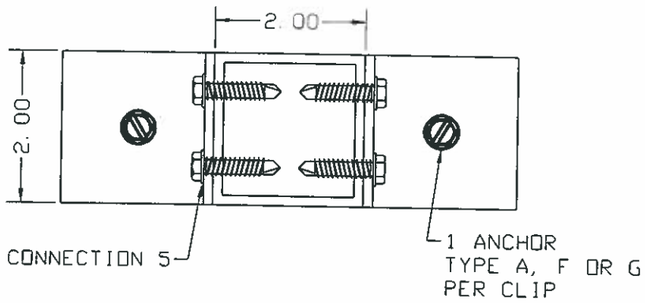

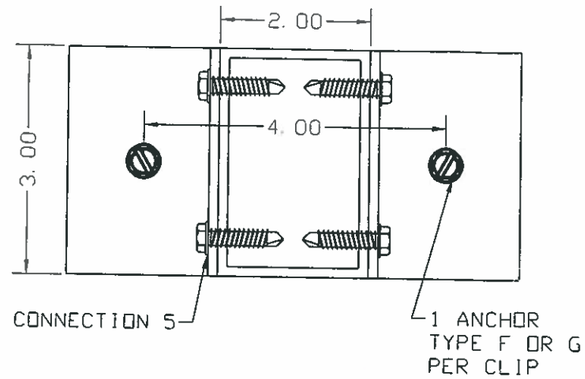

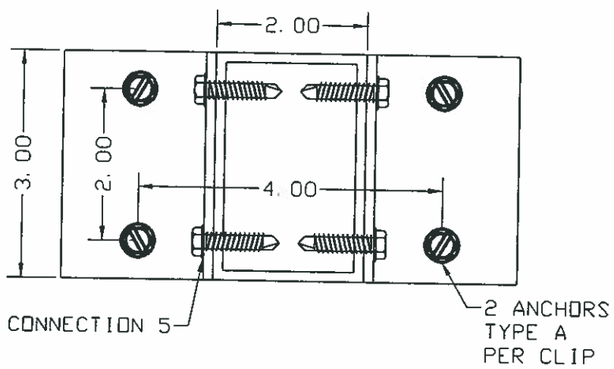

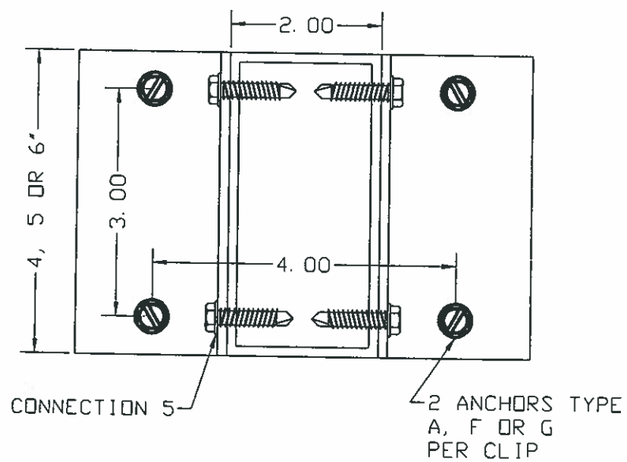

CONNECTION CAPACITY IS LIMITED TO THE MAXIMUM ALLOWABLE PRESSURES SPECIFIED AT TABLE 4 ON SHEET 5

ANCHOR SCHEDULE

TYPE	DESCRIPTION	MANUFACTURER	EMBEDMENT	ED	BASE MATERIAL
A	1/4" ss TAPCON	ITW	1 3/4"	2 1/2"	3000 psi CONCRETE
F	1/4"-20 ss SOLID-SET	ALL POINTS	1"	2 1/2"	3000 psi CONCRETE
G	5/16" TAPCON	ITW	2 1/4"	2 1/2"	3000 psi CONCRETE

ANCHOR NOTES:
1- 1/4" CARBON STEEL TAPCONS CAN BE USED AS AN ALTERNATE TO THE STAINLESS STEEL

CONNECTION 4 STORM BARS ANCHORAGE FLOOR/CEILING TO BUILT-OUT TUBE OR HEADER

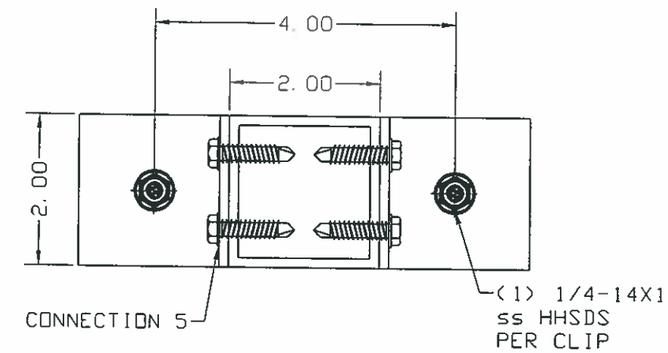

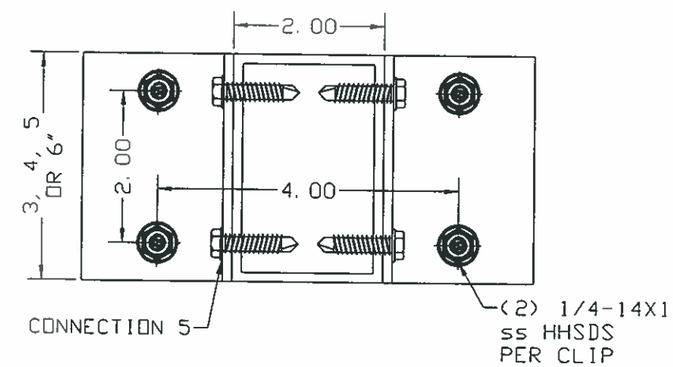

CONNECTION CAPACITY IS LIMITED TO THE MAXIMUM ALLOWABLE PRESSURES SPECIFIED AT TABLE 4 ON SHEET 5

ANCHOR NOTES:
1- 1/4"-14 HHSDS GRADE 5 CAN BE USED AS AN ALTERNATE TO THE STAINLESS STEEL

Manufacturer:
CROCI NORTH AMERICA
11600 ADELMO LANE
FORT MYERS, FL 33966
Tel.: (239) 278-3066
Fax: (239) 278-5977

PRODUCT:
ES 55 - ES 44
EXTRUDED ALUMINUM ROLLING SHUTTER

Engineering:
EngCo Inc.
CR 11234
5595 ORANGE DR. SUITE 201
DAVIE - FLORIDA 333314
www.engcoinc.com

STATE OF TEXAS
PEDRO FIGUEIREDO
102937
PROFESSIONAL ENGINEER

MAR 17 2014

Engineer Seal
Pedro De Figueiredo
TEXAS - PE 102937

Date: 03/18/2013
Scale: NA
Design by: PPMF

REVISION:
REPLACE DWG 10-102

Drawing Number
13-070

CONNECTION 5
CLIP ANCHORED TO STORM BAR

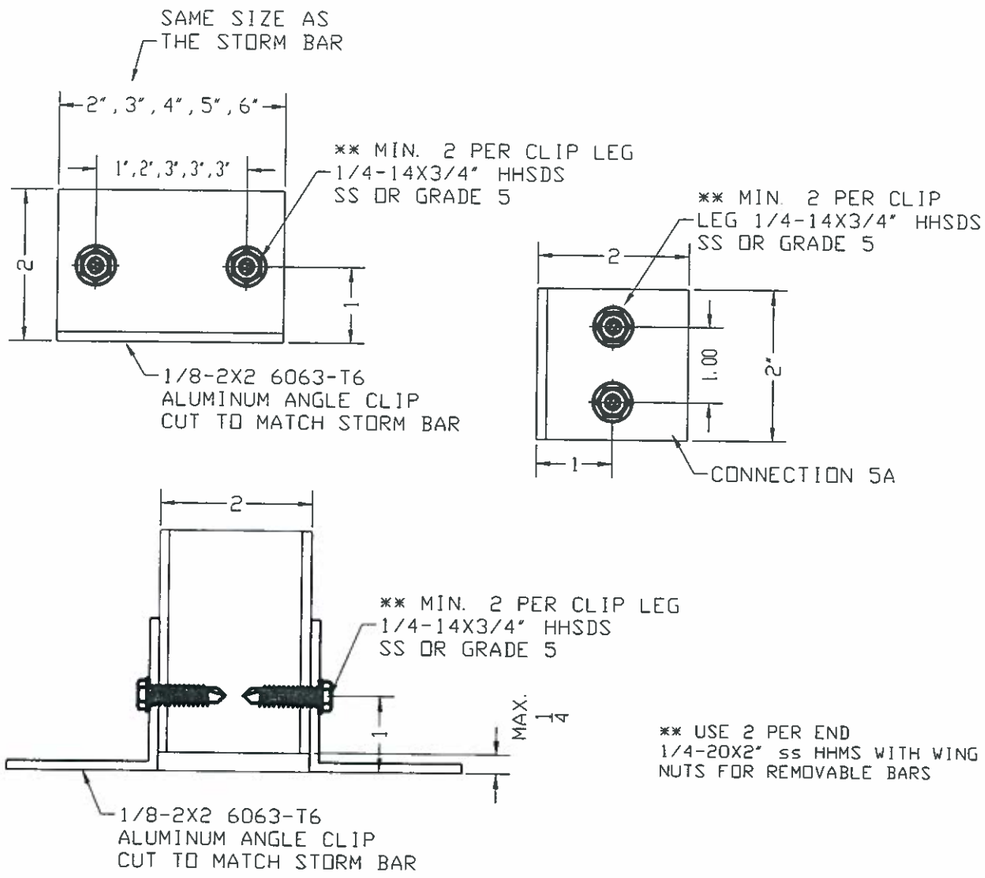

CONNECTION 6
BUILT-OUT WALL ANCHORAGE

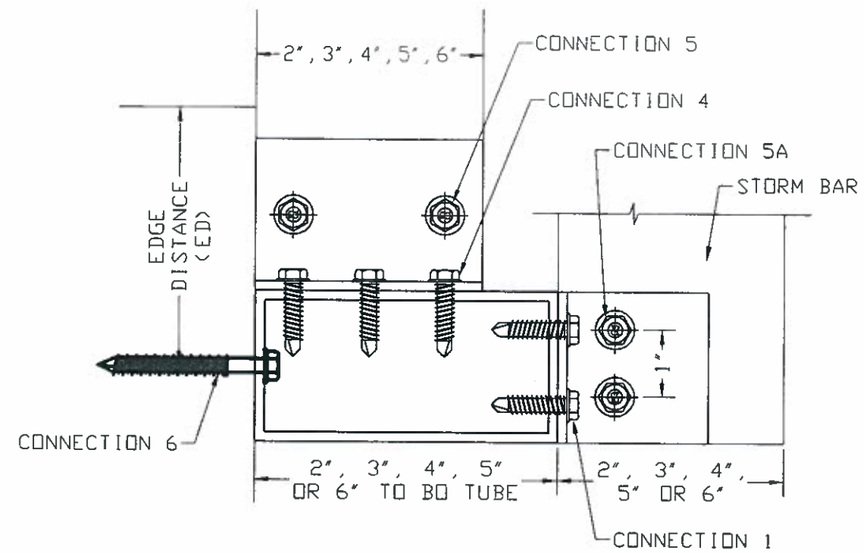

CONNECTION 6
MINIMUM NUMBER OF ANCHORS TO SECURE BUILT-OUT TUBE TO WALL

STORM BARS	ANCHOR TYPE					
	A	B	C	D	E	G
2x2	4	5	4	3	3	3
2x3	5	7	5	4	5	5
2x4	7	8	7	4	6	6
2x5	8	10	8	5	7	7
2x6	9	11	9	6	8	8

CONNECTION 6A:
WHEN USED TO HOLD ONLY INSIDE STORM BAR WITH LOAD BEARING AGAINST THE WALL USE ONLY 2 ANCHORS TYPE A, B, C, D, E OR G

	ANCHOR TYPE					
	A	B	C	D	E	G
S	3.0	3.0	3.0	2.0	4.0	3.0
ED	2.5	2.5	1.0	0.5	4.0	2.5

S - ANCHOR SPACING
ED - EDGE DISTNCE

ANCHOR SCHEDULE

TYPE	DESCRIPTION	MANUFACTURER	EMBEDMENT	ED	BASE MATERIAL
A	1/4" ss TAPCON	ITW	1 3/4"	2 1/2"	3000 psi CONCRETE
B	1/4" ss TAPCON	ITW	1 1/4"	2 1/2"	HOLLOW BLOCK
C	1/4"-14 ss HHSMS	GENERIC	1 1/2"	1"	WOOD (SG>=.46)
D	1/4"-14 ss HHSDS	GENERIC	1/8"	3/4"	1/8" METAL STRUCTURE
E	5/16" TAPCON	ITW	1 1/4"	4"	HOLLOW BLOCK
G	5/16" TAPCON	ITW	2 1/4"	2 1/2"	3000 psi CONCRETE

ANCHOR NOTES:
1- 1/4" TAPCONS CAN BE USED AS TYPE C INTO WOOD
2- 1/4" CARBON STEEL TAPCONS CAN BE USED AS AN ALTERNATE TO THE STAINLESS STEEL
3- METAL STRUCTURES ARE MADE OF MINIMUM 6063-T6 ALUMINUM OR ASTM A36 STEEL

CONNECTION CAPACITY IS LIMITED TO THE MAXIMUM ALLOWABLE PRESSURES SPECIFIED AT TABLE 4 ON SHEET 5

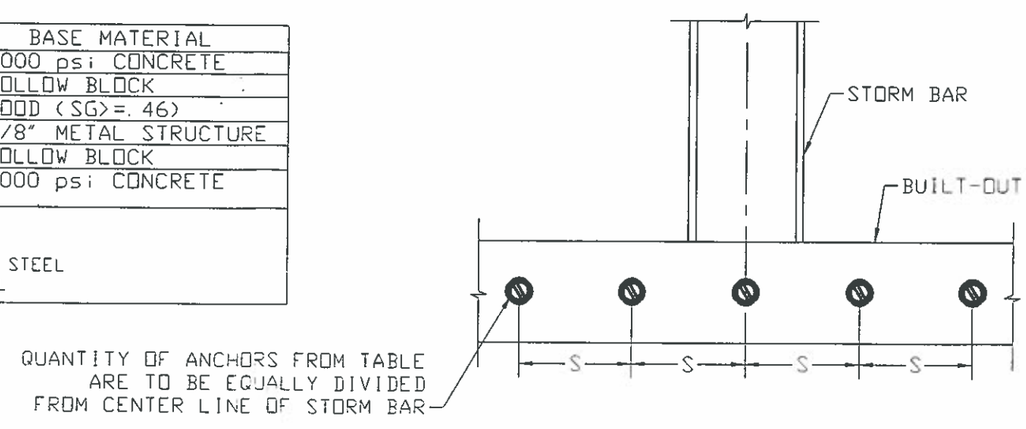

Manufacturer:
CROCI NORTH AMERICA
11600 ADELMO LANE
FORT MYERS, FL 33966
Tel.: (239) 278-3066
Fax: (239) 278-5977

PRODUCT:
ES 55 - ES 44
EXTRUDED ALUMINUM ROLLING SHUTTER

STATE OF TEXAS
PEDRO FIGUEIREDO
102937
PROFESSIONAL ENGINEER

MAR 17 2014

Engineer Seal
Pedro De Figueiredo
TEXAS - PE 102937

Date: 03/18/2013
Scale: NA
Design by: PPMF

Drawing Number
13-070

TABLE 5- HEADER BARS
CONNECTION TYPE 8
ALLOWABLE DESIGN LOAD - Pd (Psf)

TT	SBH	HEADER BAR 2X2	2X3	2X4	2X5	2X6
72	36	75	150	150	150	150
	48	57	136	147	147	147
	60	45	109	117	117	117
	72	38	91	98	98	98
	84	32	78	84	84	84
	96	28	68	73	73	73
	108	25	60	65	65	65
	120	23	54	59	59	59
84	36	48	127	150	150	150
	48	36	95	126	126	126
	60	29	76	100	100	100
	72	24	63	84	84	84
	84	20	54	72	72	72
	96	--	48	63	63	63
	108	--	42	56	56	56
	120	--	38	50	50	50
96	36	32	85	147	147	147
	48	24	64	110	110	110
	60	--	51	88	88	88
	72	--	43	73	73	73
	84	--	36	63	63	63
	96	--	32	55	55	55
	108	--	28	49	49	49
	120	--	26	44	44	44
108	36	22	60	121	130	130
	48	--	45	91	98	98
	60	--	36	73	78	78
	72	--	30	61	65	65
	84	--	26	52	56	56
	96	--	22	45	49	49
	108	--	20	40	43	43
	120	--	--	36	39	39
120	36	--	44	88	117	117
	48	--	33	66	88	88
	60	--	26	53	70	70
	72	--	22	44	59	59
	84	--	--	38	50	50
	96	--	--	33	44	44
	108	--	--	29	39	39
	120	--	--	26	35	35
130	36	--	34	69	108	108
	48	--	26	52	81	81
	60	--	21	42	65	65
	72	--	--	35	54	54
	84	--	--	30	46	46
	96	--	--	26	41	41
	108	--	--	23	36	36
	120	--	--	21	32	32
150	36	--	22	45	79	94
	48	--	--	34	59	70
	60	--	--	27	47	56
	72	--	--	23	39	47
	84	--	--	--	34	40
	96	--	--	--	30	35
	108	--	--	--	26	31
	120	--	--	--	24	28

TABLE 6- HEADER BARS
CONNECTION TYPE 9
ALLOWABLE DESIGN LOAD - Pd (Psf)

TT	SBH	HEADER BAR TYPE 2X2	2X3	2X4	2X5	2X6
72	36	75	150	150	150	150
	48	57	136	150	150	150
	60	45	109	150	150	150
	72	38	91	138	150	150
	84	32	78	118	147	147
	96	28	68	103	129	129
	108	25	60	92	115	115
	120	23	54	83	103	103
84	36	48	127	150	150	150
	48	36	95	150	150	150
	60	29	76	122	150	150
	72	24	63	101	141	147
	84	20	54	87	121	126
	96	--	48	76	106	111
	108	--	42	68	94	98
	120	--	38	61	85	88
96	36	32	85	150	150	150
	48	24	64	116	150	150
	60	--	51	93	130	150
	72	--	43	78	108	129
	84	--	36	67	93	111
	96	--	32	58	81	97
	108	--	28	52	72	86
	120	--	26	47	65	77
108	36	22	60	121	150	150
	48	--	45	91	128	150
	60	--	36	73	103	136
	72	--	30	61	86	114
	84	--	26	52	73	97
	96	--	22	45	64	85
	108	--	20	40	57	76
	120	--	--	36	51	68
120	36	--	44	88	139	150
	48	--	33	66	104	138
	60	--	26	53	83	110
	72	--	22	44	69	92
	84	--	--	38	59	79
	96	--	--	33	52	69
	108	--	--	29	46	61
	120	--	--	26	42	55
130	36	--	34	69	118	150
	48	--	26	52	89	118
	60	--	21	42	71	94
	72	--	--	35	59	78
	84	--	--	30	51	67
	96	--	--	26	44	59
	108	--	--	23	39	52
	120	--	--	21	35	47
150	36	--	22	45	79	118
	48	--	--	34	59	88
	60	--	--	27	47	71
	72	--	--	23	39	59
	84	--	--	--	34	50
	96	--	--	--	30	44
	108	--	--	--	26	39
	120	--	--	--	24	35

HEADER NOTES
1- TT: TRACK TO TRACK, SBH: STORM BAR HEIGH
2- SPECIFIC CONDITIONS OUT OF THE SCOPE OF THESE TABLES CAN BE ADDRESSED WITH A SITE SPECIFIC DESIGN BY A PROFESSIONAL ENGINEER

HEADER MOUNT - CONNECTION 8

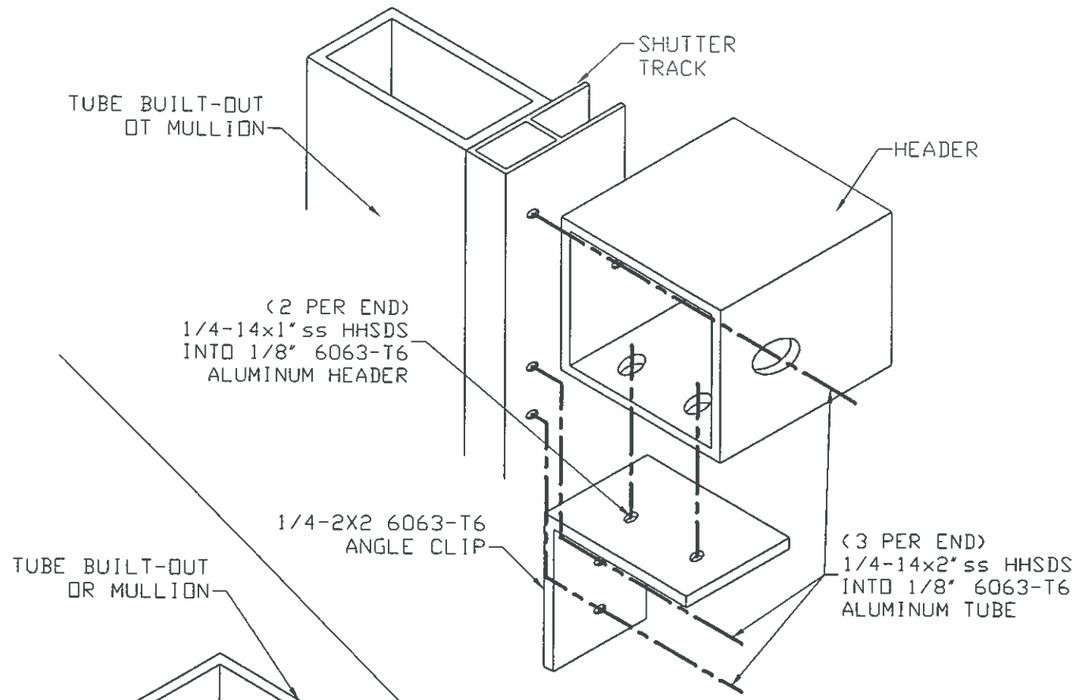

HEADER MOUNT - CONNECTION 9

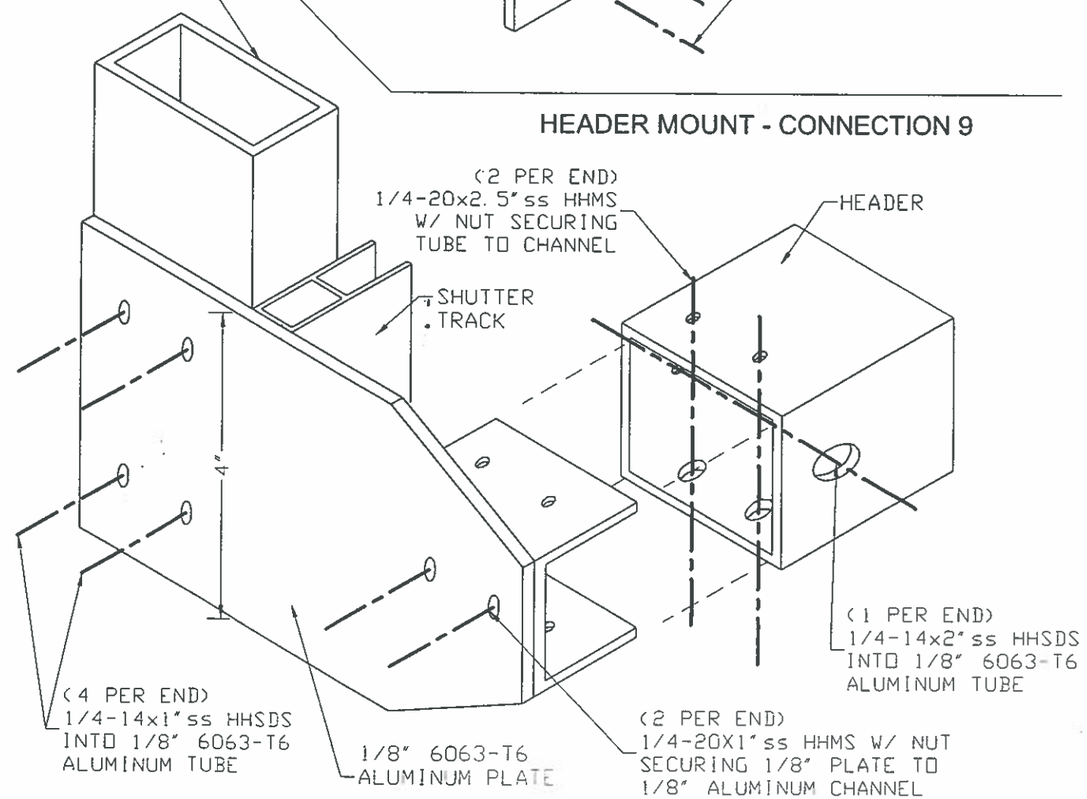

Manufacturer:
CROCI NORTH AMERICA
11600 ADELMO LANE
FORT MYERS, FL 33966
Tel.: (239) 278-3066
Fax: (239) 278-5977

PRODUCT:
ES 55 - ES 44
EXTRUDED ALUMINUM ROLLING SHUTTER

STATE OF TEXAS
PEDRO FIGUEIREDO
102937
PROFESSIONAL ENGINEER

MAR 17 2014

Engineer Seal
Pedro De Figueiredo
TEXAS - PE 102937

Date: 03/18/2013
Scale: NA
Design by: PPMF

Drawing Number
13-070

Sheet
9 of 18

DIVIDE EQUALLY FROM CENTER LINE OF HEADER THE MINIMUM QUANTITY OF ANCHORS SELECTED FROM TABLES BELOW

CONNECTION 7
MINIMUM NUMBER OF ANCHORS
TO SECURE 1/8" BUILT-OUT TUBE TO WALL

HEADER TYPE	CONNECTION 8						CONNECTION 9					
	A	B	C	D	E	G	A	B	C	D	E	G
2X2	1	2	1	1	1	1	2	3	2	2	2	2
2X3	3	4	3	2	3	3	5	6	5	3	4	4
2X4	5	6	5	3	4	4	-	-	-	4	6	6
2X5	5	6	5	3	4	4	-	-	-	5	-	-
2X6	5	6	5	3	4	4	-	-	-	5	-	-

CONNECTION 7A
MINIMUM NUMBER OF ANCHORS
TO SECURE 1/4" BUILT-OUT TUBE TO WALL

HEADER TYPE	CONNECTION 8						CONNECTION 9					
	A	B	C	D	E	G	A	B	C	D	E	G
2X2	1	3	1	2	2	1	1	3	1	2	2	1
2X3	2	6	2	3	4	2	2	6	2	3	4	2
2X4	3	6	3	3	4	2	4	--	4	4	5	3
2X5	3	6	3	3	4	2	4	--	4	5	6	4
2X6	3	6	3	3	4	2	4	--	4	5	6	4

S SPACING	ANCHOR TYPE					
	A	B	C	D	E	G
	3	3	2	2	4	3

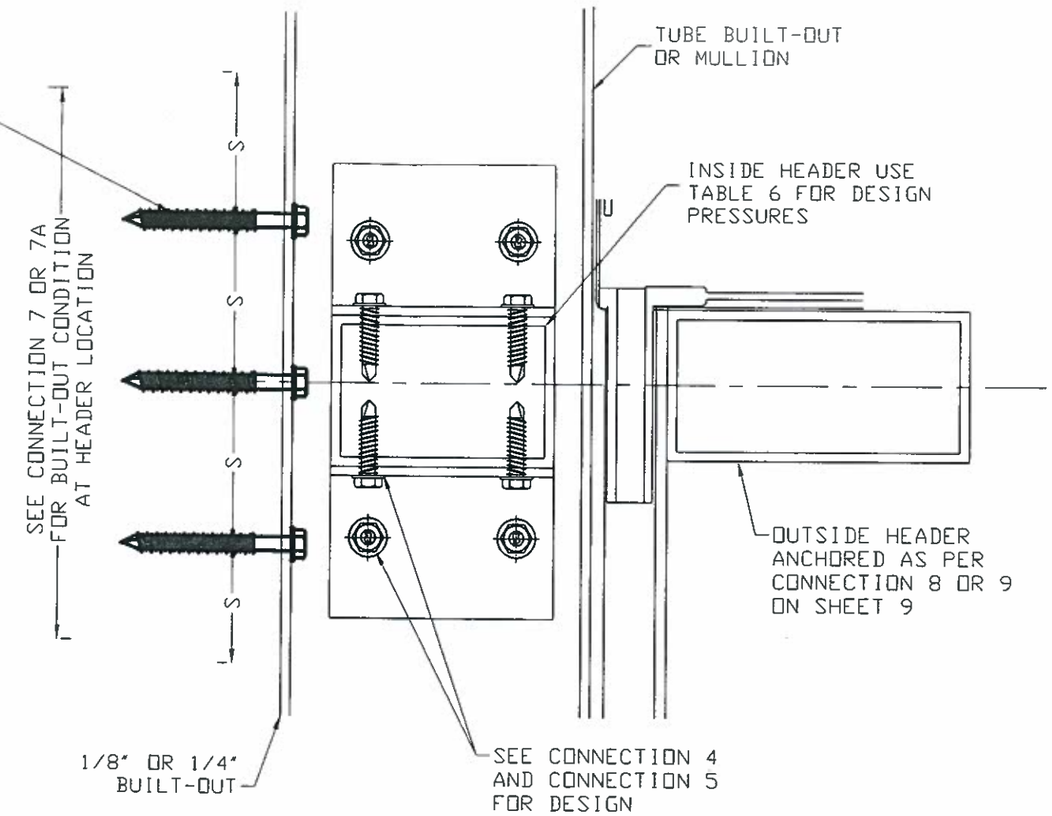

ANCHOR SCHEDULE

TYPE	DESCRIPTION	MANUFACTURER	EMBEDMENT	ED	BASE MATERIAL
A	1/4" ss TAPCON	ITW	1 3/4"	2 1/2"	3000 psi CONCRETE
B	1/4" ss TAPCON	ITW	1 1/4"	2 1/2"	HOLLOW BLOCK
C	1/4"-14 ss HHSMS	GENERIC	1 1/2"	1"	WOOD (SG>=.46)
D	1/4"-14 ss HHSDS	GENERIC	1/8"	3/4"	1/8" METAL STRUCTURE
E	5/16" TAPCON	ITW	1 1/4"	4"	HOLLOW BLOCK
G	5/16" TAPCON	ITW	2 1/4"	2 1/2"	3000 psi CONCRETE

ANCHOR NOTES:
1- 1/4" TAPCONS CAN BE USED AS TYPE C INTO WOOD
2- 1/4" CARBON STEEL TAPCONS CAN BE USED AS AN ALTERNATE TO THE STAINLESS STEEL
3- METAL STRUCTURES ARE MADE OF MINIMUM 6063-T6 ALUMINUM OR ASTM A36 STEEL
4- SPECIFIC CONDITIONS OUT OF THE SCOPE OF THESE TABLES CAN BE ADDRESSED WITH A SITE SPECIFIC DESIGN BY A PROFESSIONAL ENGINEER

Manufacturer:
CROCI NORTH AMERICA
11600 ADELMO LANE
FORT MYERS, FL 33966
Tel.: (239) 278-3066
Fax: (239) 278-5977

PRODUCT:
ES 55 - ES 44
EXTRUDED ALUMINUM ROLLING SHUTTER

Engineering:
EngCo Inc.
CR 11234
5595 ORANGE DR. SUITE 201
DAVIE - FLORIDA 333314
www.engcoinc.com

STATE OF TEXAS
PEDRO FIGUEIREDO
102937
PROFESSIONAL ENGINEER

MAR 17 2014

Engineer Seal
Pedro De Figueiredo
TEXAS - PE 102937

Date: 03/18/2013
Scale: NA
Design by: PPMF

REVISION:
REPLACE DWG 10-102

Drawing Number
13-070

MULLION SELECTION TABLES

ALLOWABLE DESIGN LOAD - Pd (Psf)

CASE 1 :

SINGLE SPAN SHUTTERS

TABLE 7- MULLION BARS
ALLOWABLE DESIGN LOAD - Pd (Psf)

SS	MH	MULLION BAR TYPE				
		2X2	2X3	2X4	2X5	2X6
24	48	150	150	150	150	150
	60	150	150	150	150	150
	72	114	150	150	150	150
	84	72	150	150	150	150
	96	48	128	150	150	150
	108	33	90	150	150	150
	120	24	65	133	150	150
	132	--	44	91	150	150
30	48	150	150	150	150	150
	60	150	150	150	150	150
	72	91	150	150	150	150
	84	57	150	150	150	150
	96	38	102	150	150	150
	108	27	72	143	150	150
	120	--	52	106	150	150
	132	--	35	73	127	150
36	48	150	150	150	150	150
	60	132	150	150	150	150
	72	76	150	150	150	150
	84	48	128	150	150	150
	96	32	85	150	150	150
	108	22	60	119	150	150
	120	--	43	89	133	150
	132	--	29	60	106	144
48	48	100	100	110	110	110
	60	99	100	110	110	110
	72	57	100	110	110	110
	84	36	96	110	110	110
	96	24	64	110	110	110
	108	--	45	89	110	110
	120	--	32	66	100	110
	132	--	22	45	79	108
54	48	100	100	100	100	100
	60	88	100	100	100	100
	72	50	100	100	100	100
	84	32	85	100	100	100
	96	21	57	100	100	100
	108	--	40	79	100	100
	120	--	29	59	89	100
	132	--	--	40	70	100
60	48	85	85	85	85	85
	60	79	85	85	85	85
	72	45	85	85	85	85
	84	28	76	85	85	85
	96	--	51	85	85	85
	108	--	36	71	80	85
	120	--	26	53	63	85
	132	--	--	36	85	85
80	48	40	40	40	40	40
	60	40	40	40	40	40
	72	34	40	40	40	40
	84	21	40	40	40	40
	96	--	38	40	40	40
	108	--	27	40	40	40
	120	--	--	40	40	40
	132	--	--	27	40	40

STORM BAR NOTES:
1- SS: SLAT SPAN, MH: MULLION BAR HEIGH
2- TABLES MUST WORK IN CONJUNCTION WITH MAXIMUM ALLOWABLE SLAT SPAN TABLES ON SHEET 2
3- THESE TABLES ARE FURTHER LIMITED BY TYPE OF ANCHORAGE USED.
4- SPECIFIC CONDITIONS OUT OF THE SCOPE OF THESE TABLES CAN BE ADDRESSED WITH A SITE SPECIFIC DESIGN BY A PROFESSIONAL ENGINEER

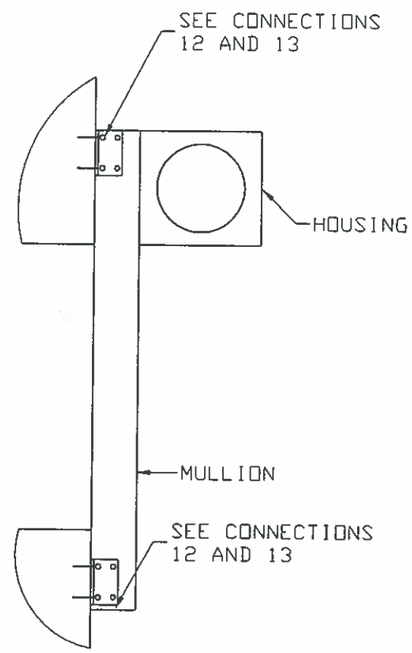

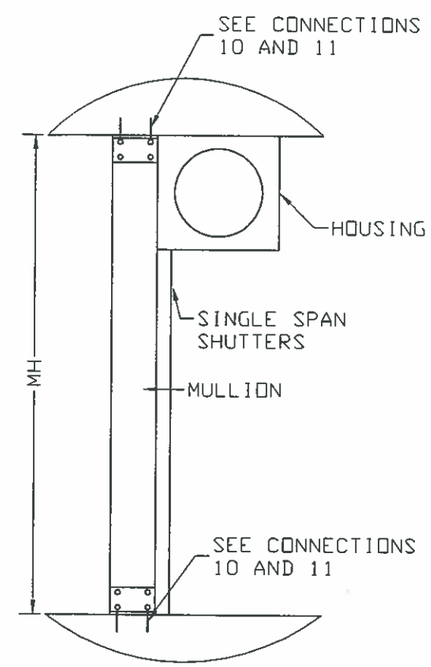

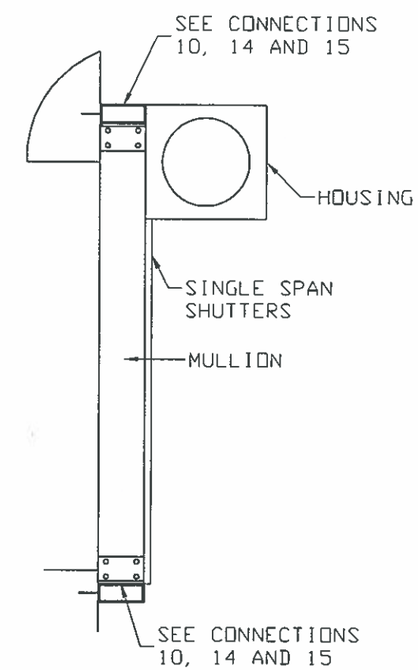

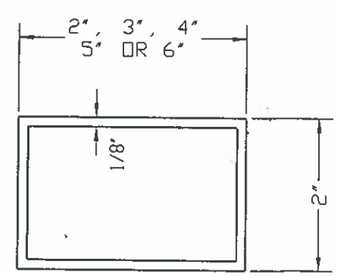

SHAPES:
1/8-2X2 6063-T6
1/8-2X3 6063-T6
1/8-2X4 6063-T6
1/8-2X5 6063-T6
1/8-2X6 6063-T6

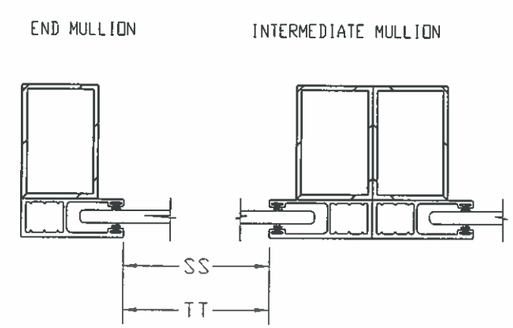

Manufacturer:
CROCI NORTH AMERICA
11600 ADELMO LANE
FORT MYERS, FL 33966
Tel.: (239) 278-3066
Fax: (239) 278-5977

PRODUCT:
ES 55 - ES 44
EXTRUDED ALUMINUM ROLLING SHUTTER

Engineering:
EngCo Inc.
CR 11234
5595 ORANGE DR. SUITE 201
DAVIE - FLORIDA 333314
www.engcoinc.com

STATE OF TEXAS
PEDRO FIGUEIREDO
102937
PROFESSIONAL ENGINEER

MAR 17 2014

Engineer Seal
Pedro De Figueiredo
TEXAS - PE 102937

Date: 03/18/2013
Scale: NA
Design by: PPMF

REVISION:
REPLACE DWG 10-102

Drawing Number
13-070

MULLION SELECTION TABLES

ALLOWABLE DESIGN LOAD - Pd (Psf)

CASE 2:

MULTIPLE SPAN SHUTTERS WITH HEADER ANCHORED TO MULLION

TABLE 8- MULLION BARS ALLOWABLE DESIGN LOAD - Pd (Psf)

TT	MH	MULLION BAR TYPE				
		2X2	2X3	2X4	2X5	2X6
72	48	75	150	150	150	150
	60	57	120	150	150	150
	72	45	95	150	150	150
	84	29	80	128	150	150
	96	--	52	100	135	135
	108	--	34	78	115	118
	120	--	23	58	92	104
	132	--	--	36	75	93
84	48	48	127	150	150	150
	60	36	95	150	150	150
	72	29	76	122	150	150
	84	21	63	101	137	137
	96	--	54	87	116	116
	108	--	39	76	101	101
	120	--	27	62	89	89
	132	--	--	39	76	80
96	48	32	85	150	150	150
	60	24	64	116	150	150
	72	--	51	93	130	142
	84	--	43	78	108	120
	96	--	36	67	93	102
	108	--	32	58	81	88
	120	--	28	52	72	78
	132	--	--	42	65	70
108	48	22	60	121	150	150
	60	--	45	91	128	150
	72	--	36	73	103	126
	84	--	30	61	86	106
	96	--	26	52	73	90
	108	--	22	45	64	78
	120	--	20	40	57	69
	132	--	--	36	51	62
120	48	--	44	88	139	150
	60	--	33	66	104	138
	72	--	26	53	83	110
	84	--	22	44	69	92
	96	--	--	38	59	79
	108	--	--	33	52	69
	120	--	--	29	46	61
	132	--	--	26	42	55
130	48	--	34	69	118	150
	60	--	26	52	89	118
	72	--	21	42	71	94
	84	--	--	35	59	78
	96	--	--	30	51	67
	108	--	--	26	44	59
	120	--	--	23	39	52
	132	--	--	21	35	47
150	48	--	22	45	79	118
	60	--	--	34	59	88
	72	--	--	27	47	71
	84	--	--	23	39	59
	96	--	--	--	34	50
	108	--	--	--	30	44
	120	--	--	--	26	39
	132	--	--	--	24	35

STORM BAR NOTES

1- TT: TRACK TO TRACK, MH: MULLION BAR HEIGH
2- TABLES MUST WORK IN CONJUNCTION WITH MAXIMUM ALLOWABLE SLAT SPAN TABLES ON SHEET 2.
3- THESE TABLES ARE FURTHER LIMITED BY TYPE OF ANCHORAGE USED.
4- SPECIFIC CONDITIONS OUT OF THE SCOPE OF THESE TABLES CAN BE ADDRESSED WITH A SITE SPECIFIC DESIGN BY A PROFESSIONAL ENGINEER

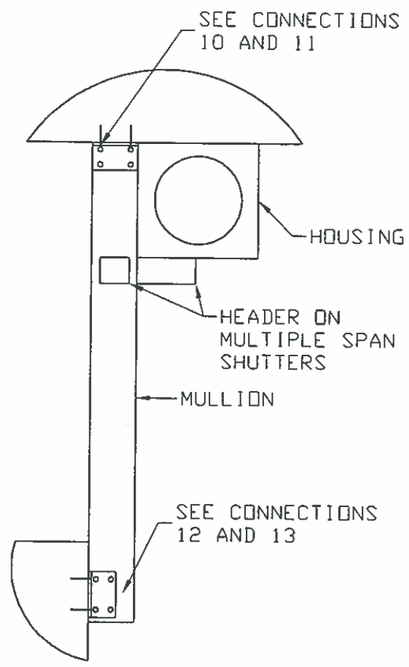

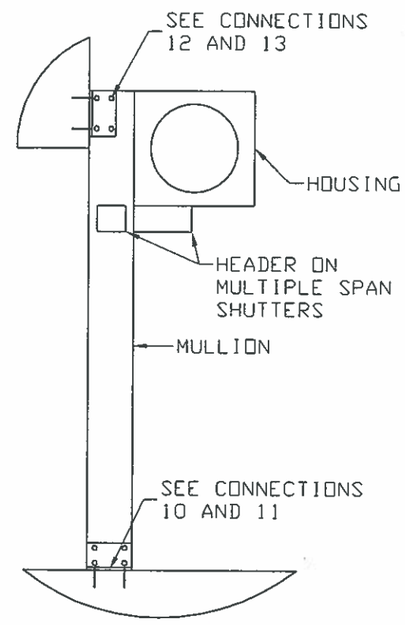

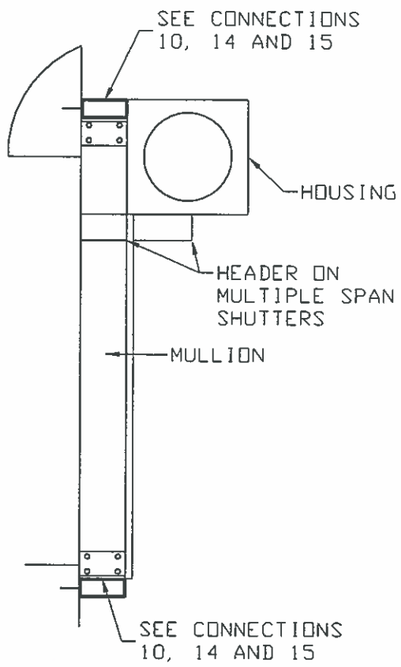

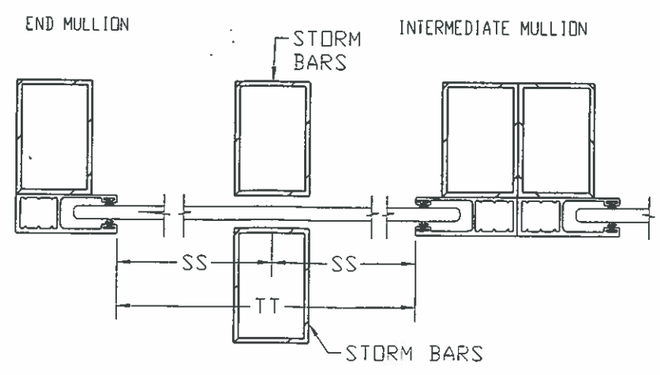

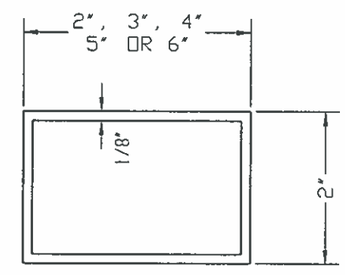

SHAPES:
1/8-2X2 6063-T6
1/8-2X3 6063-T6
1/8-2X4 6063-T6
1/8-2X5 6063-T6
1/8-2X6 6063-T6

Manufacturer:
CROCI NORTH AMERICA
11600 ADELMO LANE
FORT MYERS, FL 33966
Tel.: (239) 278-3066
Fax: (239) 278-5977

PRODUCT:
ES 55 - ES 44
EXTRUDED ALUMINUM ROLLING SHUTTER

Engineering:
EngCo Inc.
CR 11234
5595 ORANGE DR. SUITE 201
DAVIE - FLORIDA 333314
www.engcoinc.com

STATE OF TEXAS
PEDRO FIGUEIREDO
102937
PROFESSIONAL ENGINEER

MAR 17 2014

Engineer Seal
Pedro De Figueiredo
TEXAS - PE 102937

Date: 03/18/2013
Scale: NA
Design by: PPMF

REVISION:
REPLACE DWG 10-102

Drawing Number
13-070

CONNECTION 10
CLIP ANCHORED TO MULLION

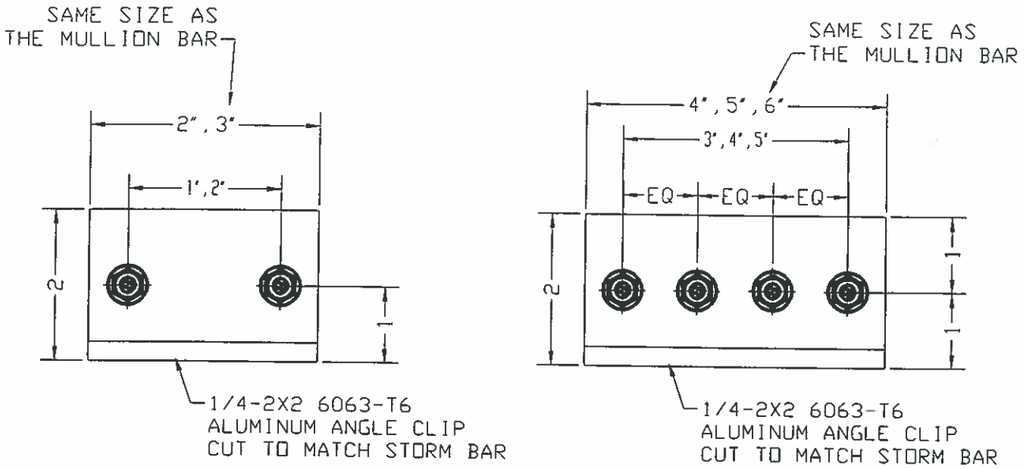

ANCHORS TO BE DESIGNED BASED ON THE MINIMUM MULLION SIZE SELECTED FROM TABLES 7 AND 8

END MULL

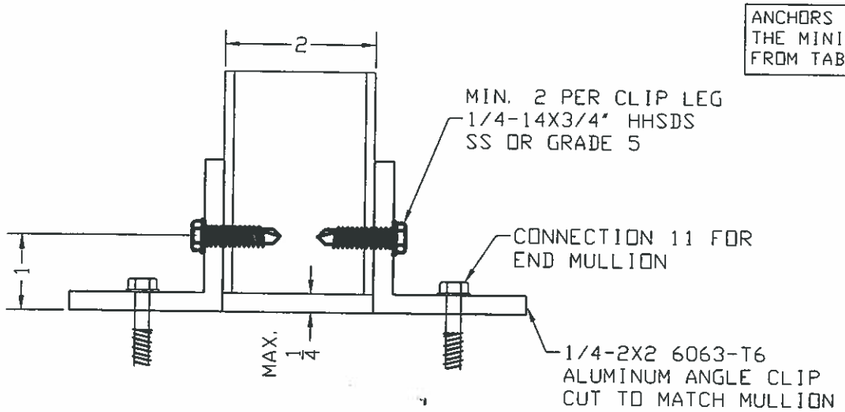

INTERMEDIATE MULL

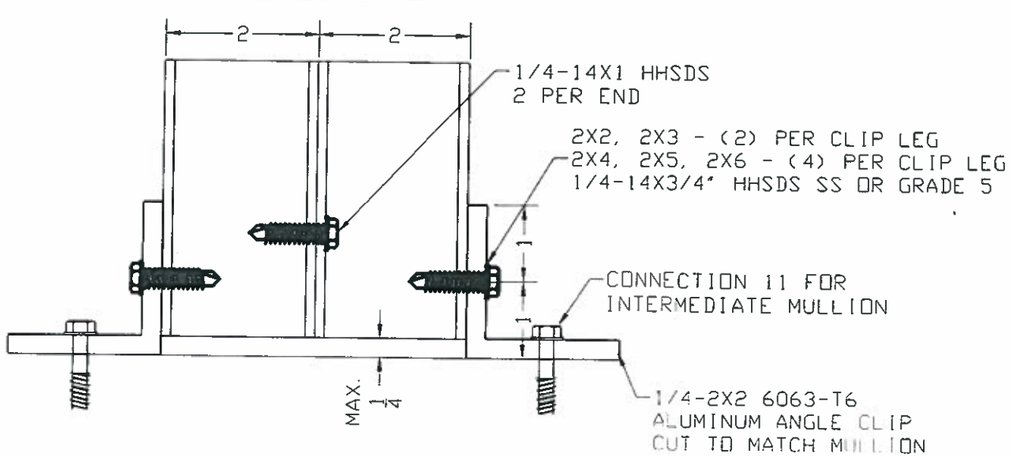

CONNECTION 13
CLIP ANCHORED TO MULLION BAR

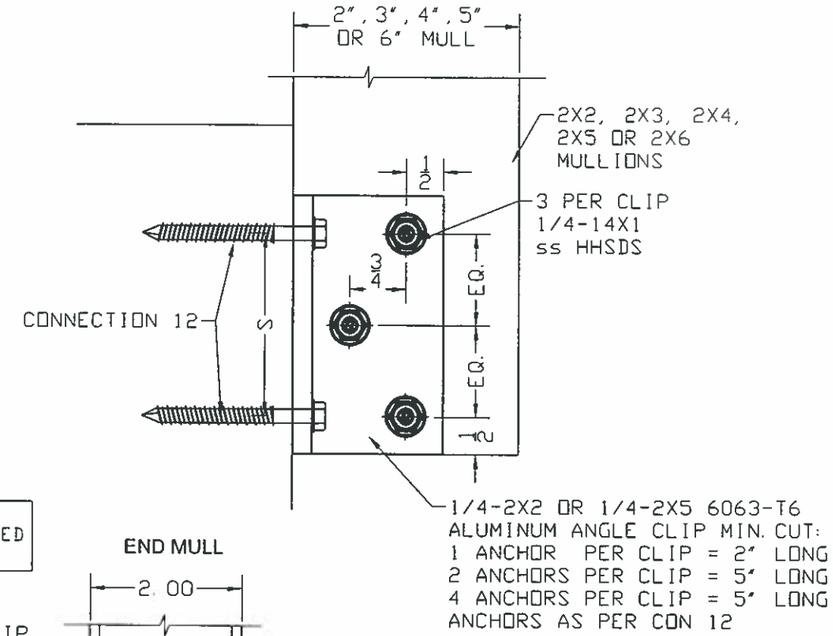

END MULL

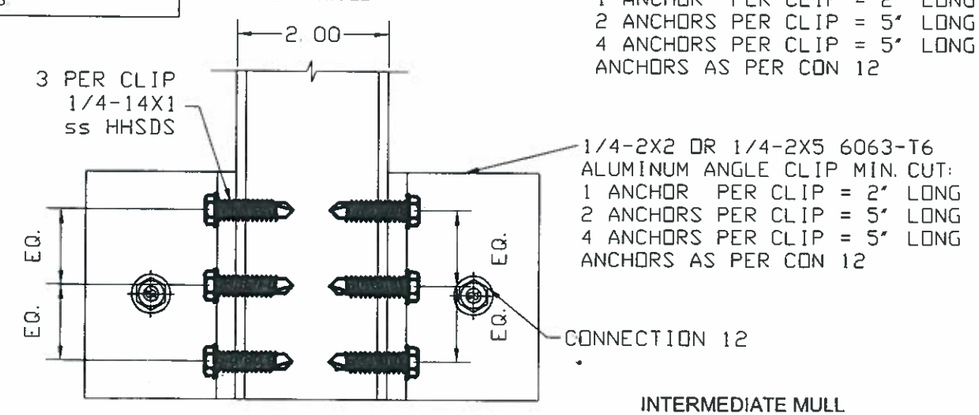

INTERMEDIATE MULL

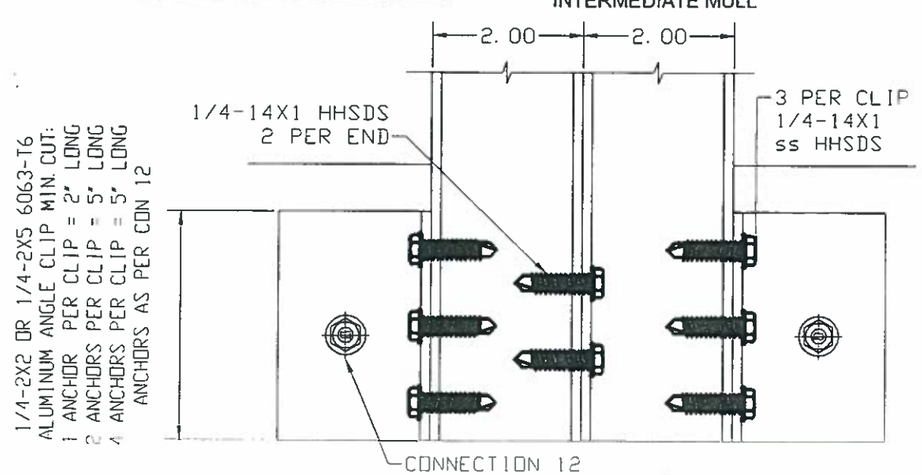

Manufacturer:
CROCI NORTH AMERICA
11600 ADELMO LANE
FORT MYERS, FL 33966
Tel.: (239) 278-3066
Fax: (239) 278-5977

PRODUCT:
ES 55 - ES 44
EXTRUDED ALUMINUM ROLLING SHUTTER

Engineering:
EngCo Inc.
CR 11234
5595 ORANGE DR. SUITE 201
DAVIE - FLORIDA 333314
www.engcoinc.com

STATE OF TEXAS
PEDRO FIGUEIREDO
102937
LICENSED PROFESSIONAL ENGINEER

MAR 17 2014

Engineer Seal
Pedro De Figueiredo
TEXAS - PE 102937

Date: 03/18/2013
Scale: NA
Design by: PPMF

REVISION:
REPLACE DWG 10-102

Drawing Number
13-070

Sheet
13 of 18

CONNECTION 11
CLIP ANCHORED TO CONCRETE FLOOR/CEILING

END MULL

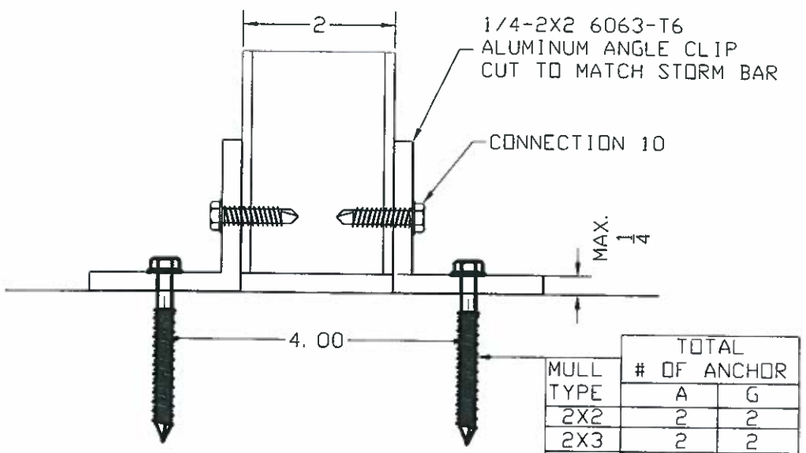

MULL TYPE	TOTAL # OF ANCHOR A	TOTAL # OF ANCHOR G
2X2	2	2
2X3	2	2
2X4	4	2
2X5	4	2
2X6	4	2

ANCHORS TO BE DESIGNED BASED ON THE MINIMUM MULLION SIZE SELECTED FROM TABLES 7 AND 8.

INTERMEDIATE MULL IONS

MULL TYPE	TOTAL # OF ANCHOR A	TOTAL # OF ANCHOR G
2X2	NA	2
2X3	NA	2
2X4	NA	4
2X5	NA	4
2X6	NA	4

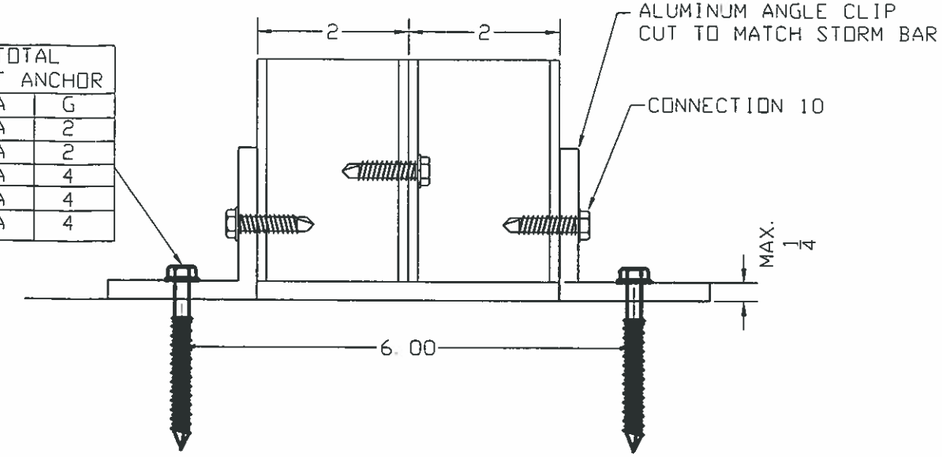

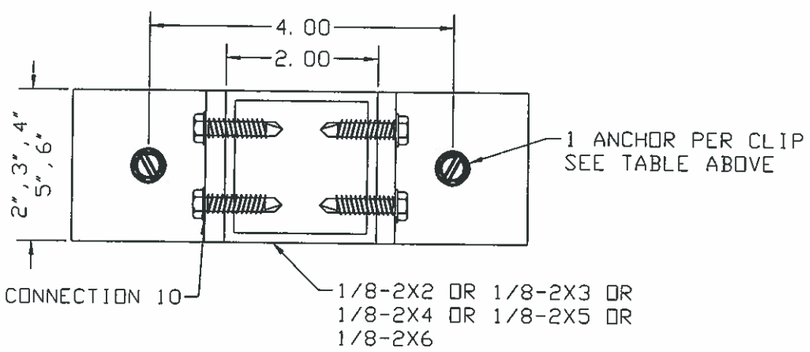

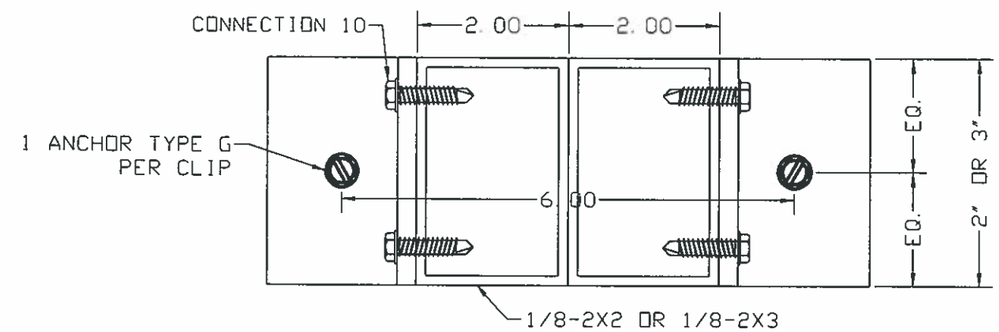

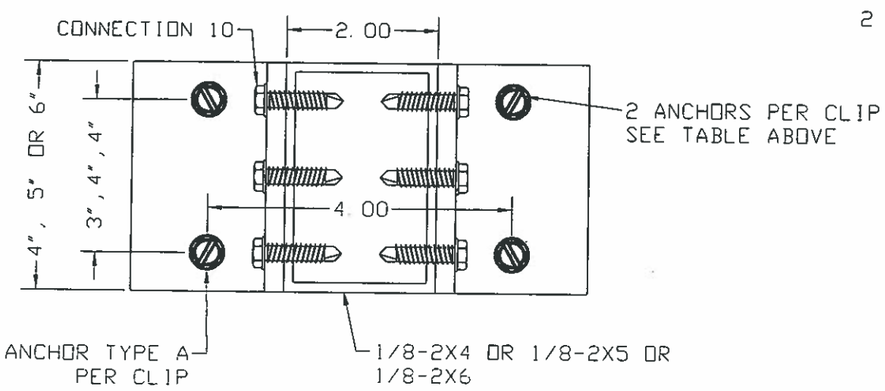

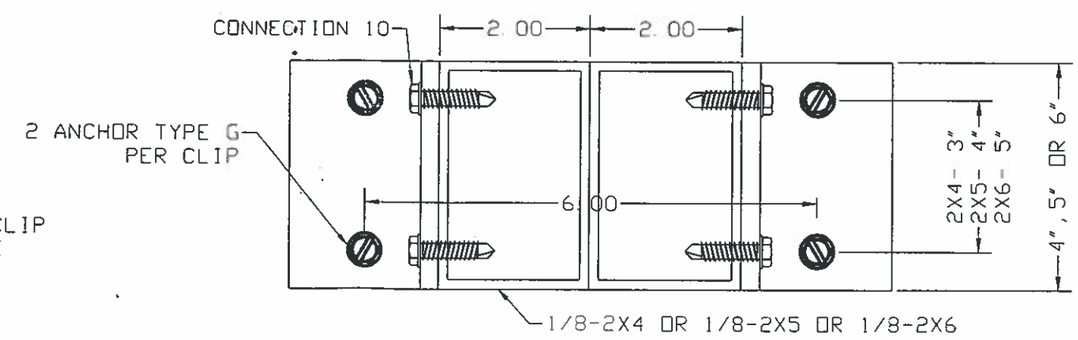

ANCHOR SCHEDULE

TYPE	DESCRIPTION	MANUFACTURER	EMBEDMENT	ED	BASE MATERIAL
A	1/4" ss TAPCON	ITW	1 3/4"	2 1/2"	3000 psi CONCRETE
G	5/16" TAPCON	ITW	2 1/4"	2 1/2"	3000 psi CONCRETE

ANCHOR NOTES:
1- 1/4" CARBON STEEL TAPCONS CAN BE USED AS AN ALTERNATE TO THE STAINLESS STEEL

Manufacturer:
CROCI NORTH AMERICA
11600 ADELMO LANE
FORT MYERS, FL 33966
Tel.: (239) 278-3066
Fax: (239) 278-5977

PRODUCT:
ES 55 - ES 44
EXTRUDED ALUMINUM ROLLING SHUTTER

Engineering:
EngCo Inc.
CR 11234
5595 ORANGE DR. SUITE 201
DAVIE - FLORIDA 333314
www.engcoinc.com

STATE OF TEXAS
PEDRO FIGUEIREDO
PROFESSIONAL ENGINEER

MAR 17 2014

Engineer Seal
Pedro De Figueiredo
TEXAS - PE 102937

Date: 03/18/2013
Scale: NA
Design by: PPMF

REVISION:
REPLACE DWG 10-102

Drawing Number
13-070

CONNECTION 12
CLIP ANCHORED TO WALL

END MULL

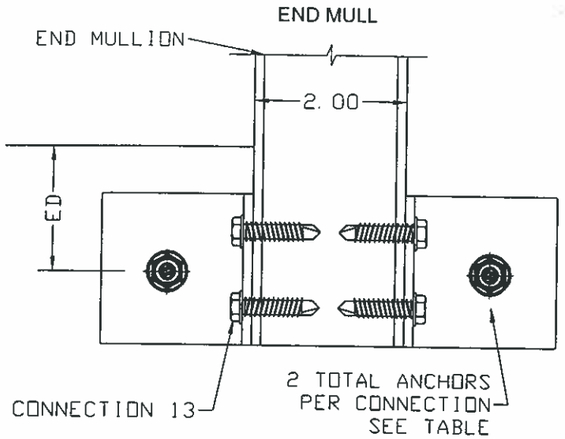

INTERMEDIATE MULL IONS

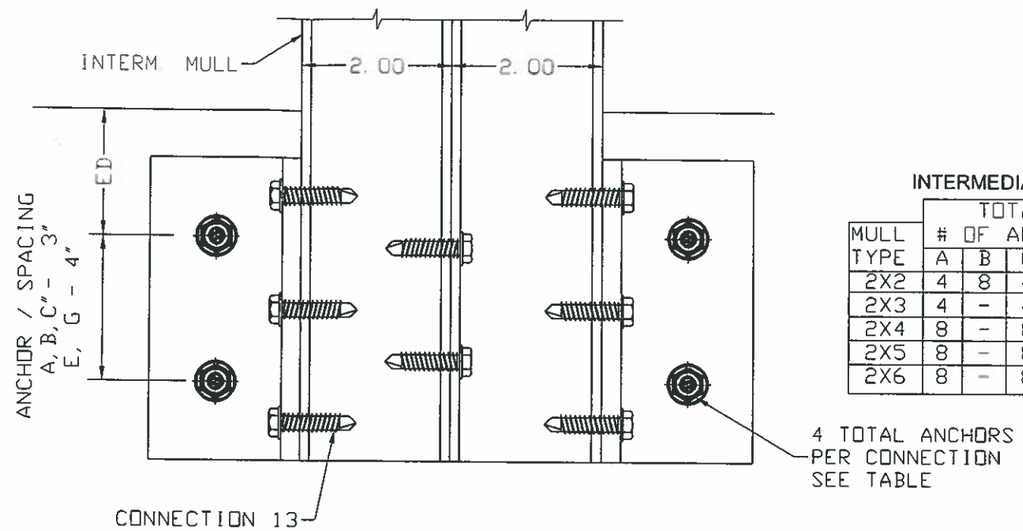

INTERMEDIATE MULL

MULL TYPE	TOTAL # OF ANCHOR A	B	C	G	E
2X2	4	8	4	4	4
2X3	4	-	4	4	8
2X4	8	-	8	8	-
2X5	8	-	8	8	-
2X6	8	-	8	8	-

END MULL

MULL TYPE	TOTAL # OF ANCHOR A	B	C	G	E
2X2	2	4	2	2	2
2X3	2	-	2	2	4
2X4	4	-	4	4	-
2X5	4	-	4	4	-
2X6	4	-	4	4	-

ANCHORS TO BE DESIGNED BASED ON THE MINIMUM MULLION SIZE SELECTED FROM TABLES 7 AND 8.

END MULL

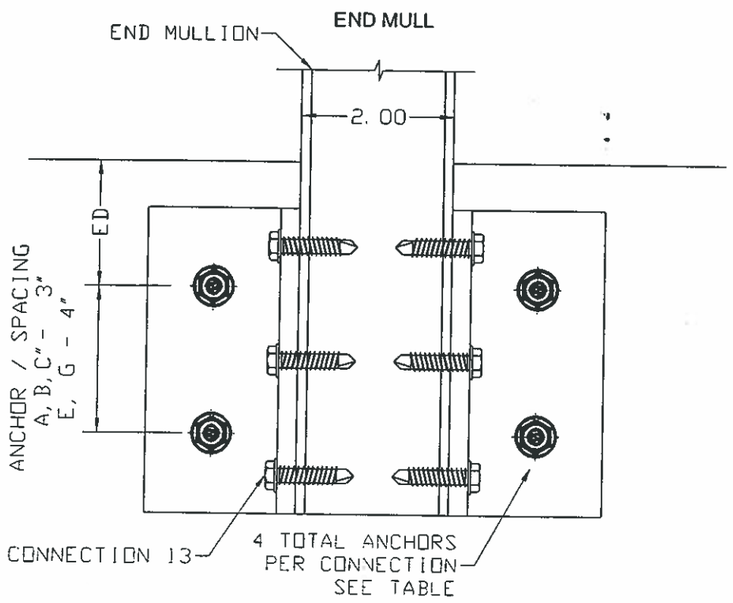

INTERMEDIATE MULL IONS

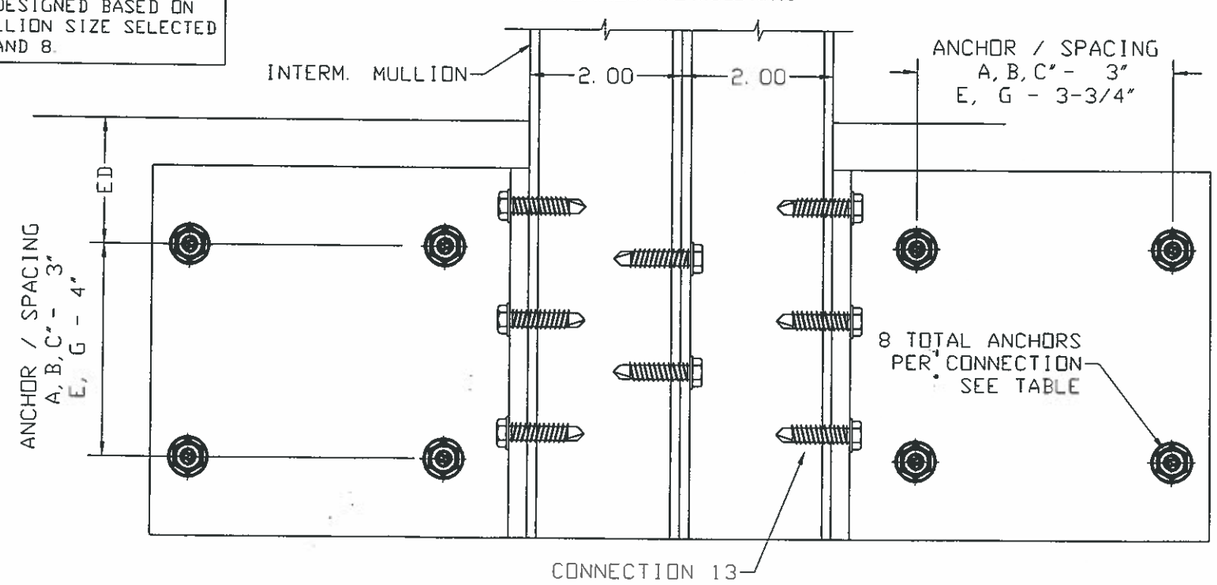

ANCHOR SCHEDULE

TYPE	DESCRIPTION	MANUFACTURER	EMBEDMENT	ED	BASE MATERIAL
A	1/4" ss TAPCON	ITW	1 3/4"	2 1/2"	3000 psi CONCRETE
B	1/4" ss TAPCON	ITW	1 1/4"	2 1/2"	HOLLOW BLOCK
C	1/4"-14 ss HHSMS	GENERIC	1 1/2"	1"	WOOD (SG>=.46)
E	5/16" TAPCON	ITW	1 1/4"	4"	HOLLOW BLOCK
G	5/16" TAPCON	ITW	2 1/4"	4"	3000 psi CONCRETE

ANCHOR NOTES
1- 1/4" TAPCONS CAN BE USED AS TYPE C INTO WOOD
2- 1/4" CARBON STEEL TAPCONS CAN BE USED AS AN ALTERNATE TO THE STAINLESS STEEL
3- METAL STRUCTURES ARE MADE OF MINIMUM 6063-T6 ALUMINUM OR ASTM A36 STEEL

Manufacturer:
CROCI NORTH AMERICA
11600 ADELMO LANE
FORT MYERS, FL 33966
Tel.: (239) 278-3066
Fax: (239) 278-5977

PRODUCT:
ES 55 - ES 44
EXTRUDED ALUMINUM ROLLING SHUTTER

Engineering:
EngCo Inc.
CR 11234
5595 ORANGE DR. SUITE 201
DAVIE - FLORIDA 333314
www.engcoinc.com

STATE OF TEXAS
PEDRO FIGUEIREDO
102937
PROFESSIONAL ENGINEER

MAR 17 2014

Engineer Seal
Pedro De Figueiredo
TEXAS - PE 102937

Date: 03/18/2013
Scale: NA
Design by: PPMF

REVISION:
REPLACE DWG 10-102

Drawing Number
13-070

CONNECTION 14
CLIP ANCHORED TO BUILT-OUT TUBE

END MULL

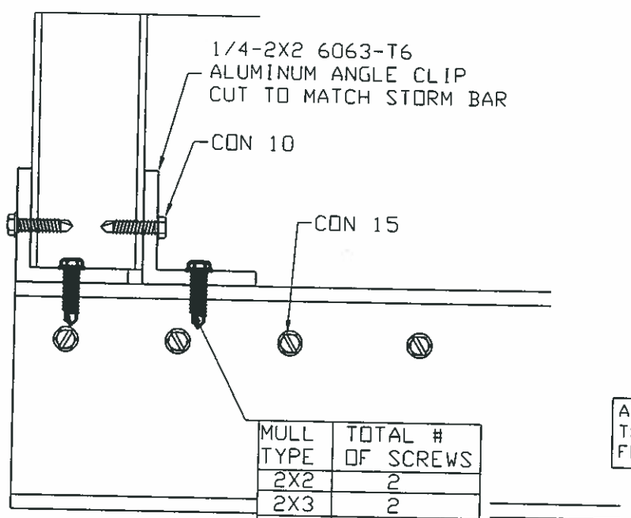

MULL TYPE	TOTAL # OF SCREWS
2X2	2
2X3	2
2X4	4
2X5	4
2X6	4

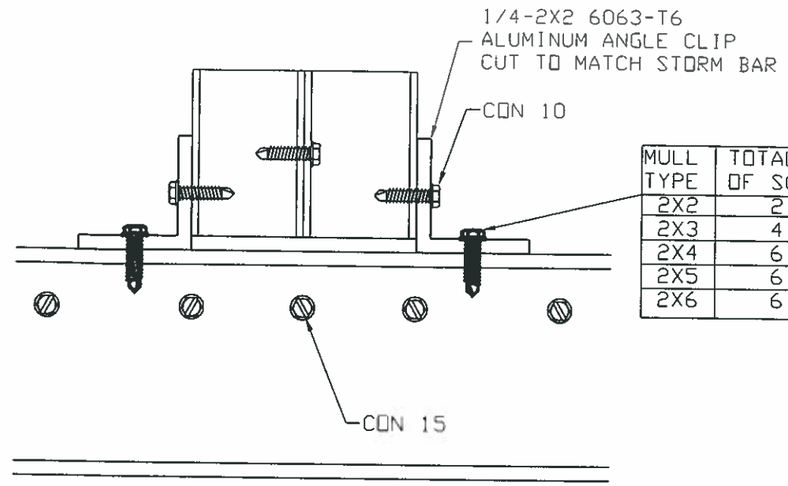

MULL TYPE	TOTAL # OF SCREWS
2X2	2
2X3	4
2X4	6
2X5	6
2X6	6

ANCHORS TO BE DESIGNED BASED ON THE MINIMUM MULLION SIZE SELECTED FROM TABLES 7 AND 8.

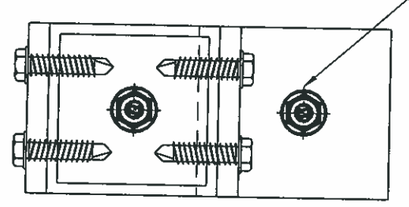

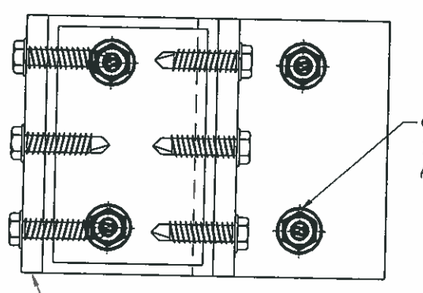

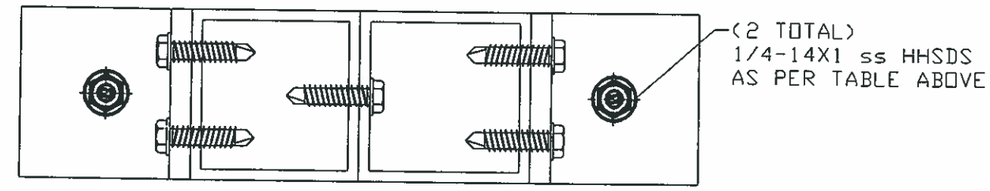

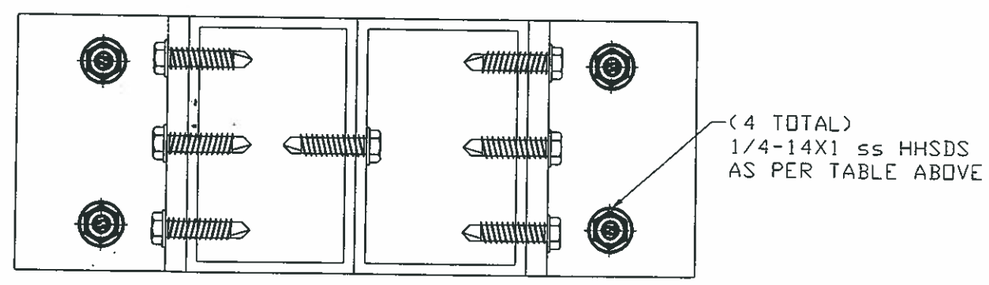

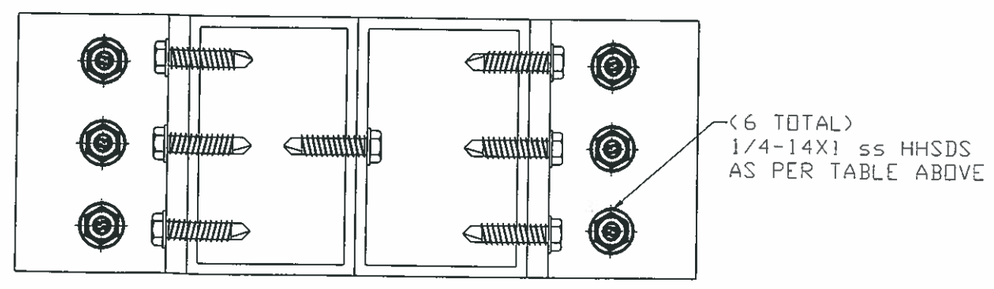

Manufacturer:
CROCI NORTH AMERICA
11600 ADELMO LANE
FORT MYERS, FL 33966
Tel.: (239) 278-3066
Fax: (239) 278-5977

PRODUCT:
ES 55 - ES 44
EXTRUDED ALUMINUM ROLLING SHUTTER

Engineering:
EngCo Inc.
CR 11234
5595 ORANGE DR. SUITE 201
DAVIE - FLORIDA 333314
www.engcoinc.com

STATE OF TEXAS
PEDRO FIGUEIREDO
102937
LICENSED PROFESSIONAL ENGINEER

MAR 17 2014

Engineer Seal
Pedro De Figueiredo
TEXAS - PE 102937

Date: 03/18/2013
Scale: NA
Design by: PPMF

REVISION:
REPLACE DWG 10-102

Drawing Number
13-070

CONNECTION 15
BUILT-OUT WALL ANCHORAGE SUPPORTING MULLIONS

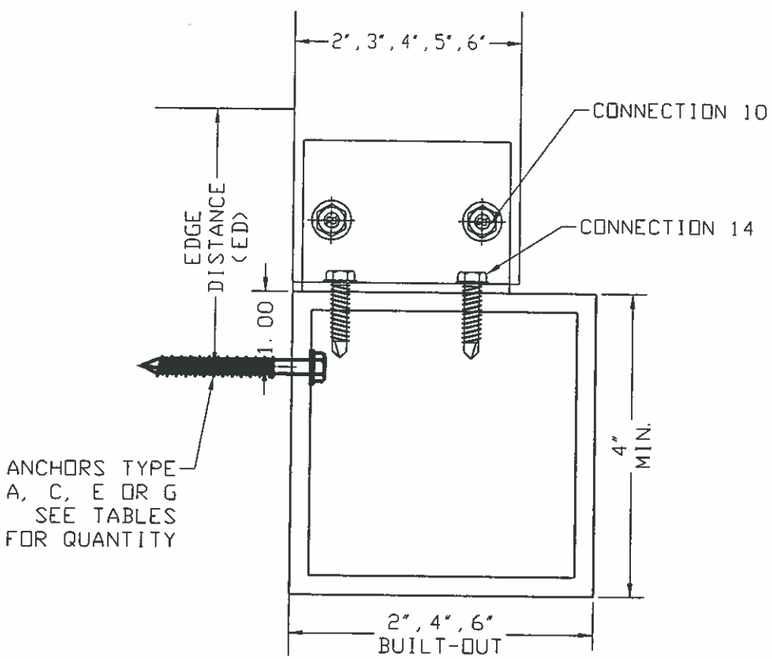

	ANCHOR TYPE			
	A	C	E	G
S	3.0	3.0	4.0	4.0
ED	2.5	1.0	4.0	4.0

S - ANCHOR SPACING
ED - EDGE DISTNCE

ANCHORS TO BE DESIGNED BASED ON THE MINIMUM MULLION SIZE SELECTED FROM TABLES 7 AND 8.

CONNECTION 15 -- INTERMEDIATE MULL
MIN. NUMBER OF ANCHORS TO SECURE BUILT-OUT TUBE TO WALL

MULL BARS	ANCHOR TYPE				
	A	B	C	E	G
2x2	4	10	4	6	3
2x3	6	-	6	9	5
2x4	9	-	9	-	8
2x5	-	-	-	-	10
2x6	-	-	-	-	10

INTERMEDIATE MULL

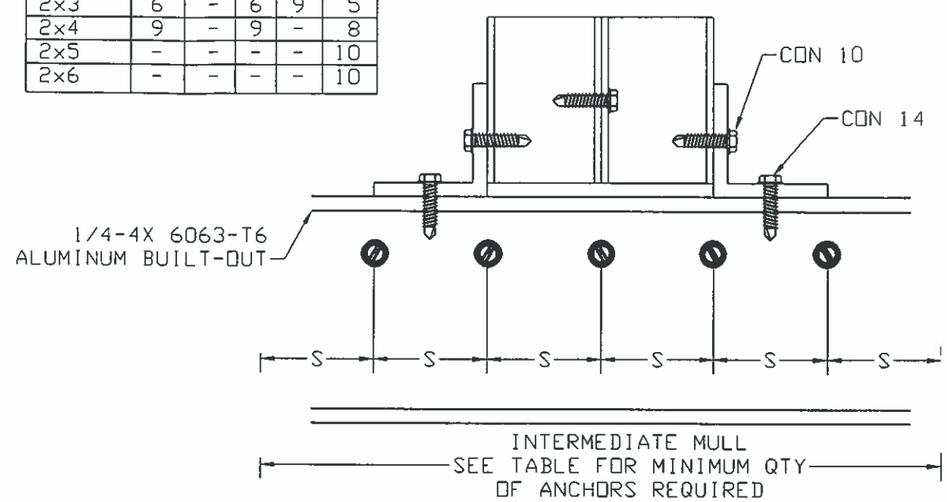

CONNECTION 15 -- END MULL
MIN. NUMBER OF ANCHORS TO SECURE BUILT-OUT TUBE TO WALL

MULL BARS	ANCHOR TYPE				
	A	B	C	E	G
2x2	2	5	2	3	2
2x3	3	7	3	5	3
2x4	5	-	5	7	4
2x5	6	-	6	-	5
2x6	6	-	6	-	5

END MULL

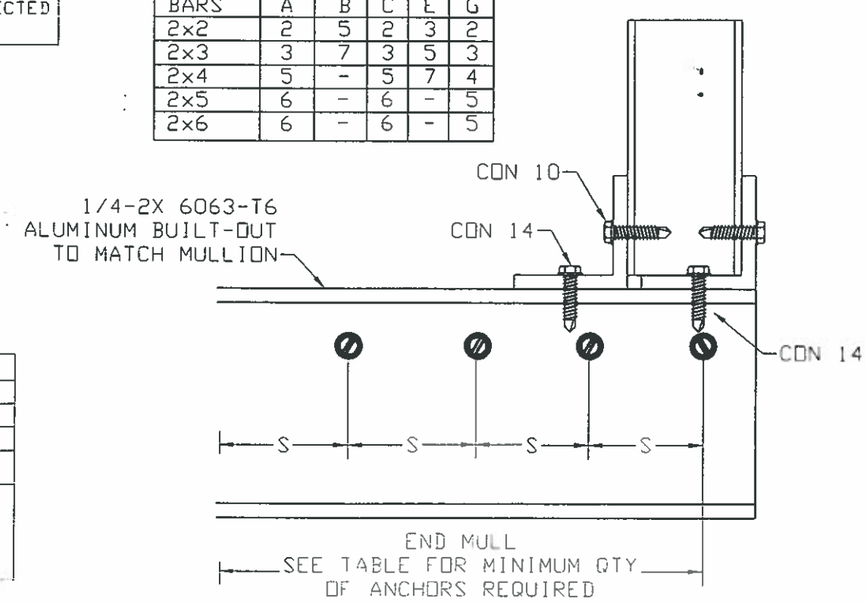

ANCHOR SCHEDULE

TYPE	DESCRIPTION	MANUFACTURER	EMBEDMENT	ED	BASE MATERIAL
A	1/4" ss TAPCON	ITW	1 3/4"	2 1/2"	3000 psi CONCRETE
C	1/4"-14 ss HHSMS	GENERIC	1 1/2"	1"	WOOD (SG>=.46)
E	5/16" TAPCON	ITW	1 1/4"	4"	HOLLOW BLOCK
G	5/16" TAPCON	ITW	2 1/4"	4"	3000 psi CONCRETE

ANCHOR NOTES:
1- 1/4" TAPCONS CAN BE USED AS TYPE C INTO WOOD
2- 1/4" CARBON STEEL TAPCONS CAN BE USED AS AN ALTERNATE TO THE STAINLESS STEEL
3- METAL STRUCTURES ARE MADE OF MINIMUM 6063-T6 ALUMINUM OR ASTM A36 STEEL

Manufacturer:
CROCI NORTH AMERICA
11600 ADELMO LANE
FORT MYERS, FL 33966
Tel.: (239) 278-3066
Fax: (239) 278-5977

PRODUCT:
ES 55 - ES 44
EXTRUDED ALUMINUM ROLLING SHUTTER

Engineering:
EngCo Inc.
CR 11234
5595 ORANGE DR. SUITE 201
DAVIE - FLORIDA 333314
www.engcoinc.com

STATE OF TEXAS
PEDRO FIGUEIREDO
102937
LICENSED PROFESSIONAL ENGINEER

MAR 17 2014

Engineer Seal
Pedro De Figueiredo
TEXAS - PE 102937

Date: 03/18/2013
Scale: NA
Design by: PPMF

REVISION:
REPLACE DWG 10-102

Drawing Number
13-070

HOUSING ASSEMBLY

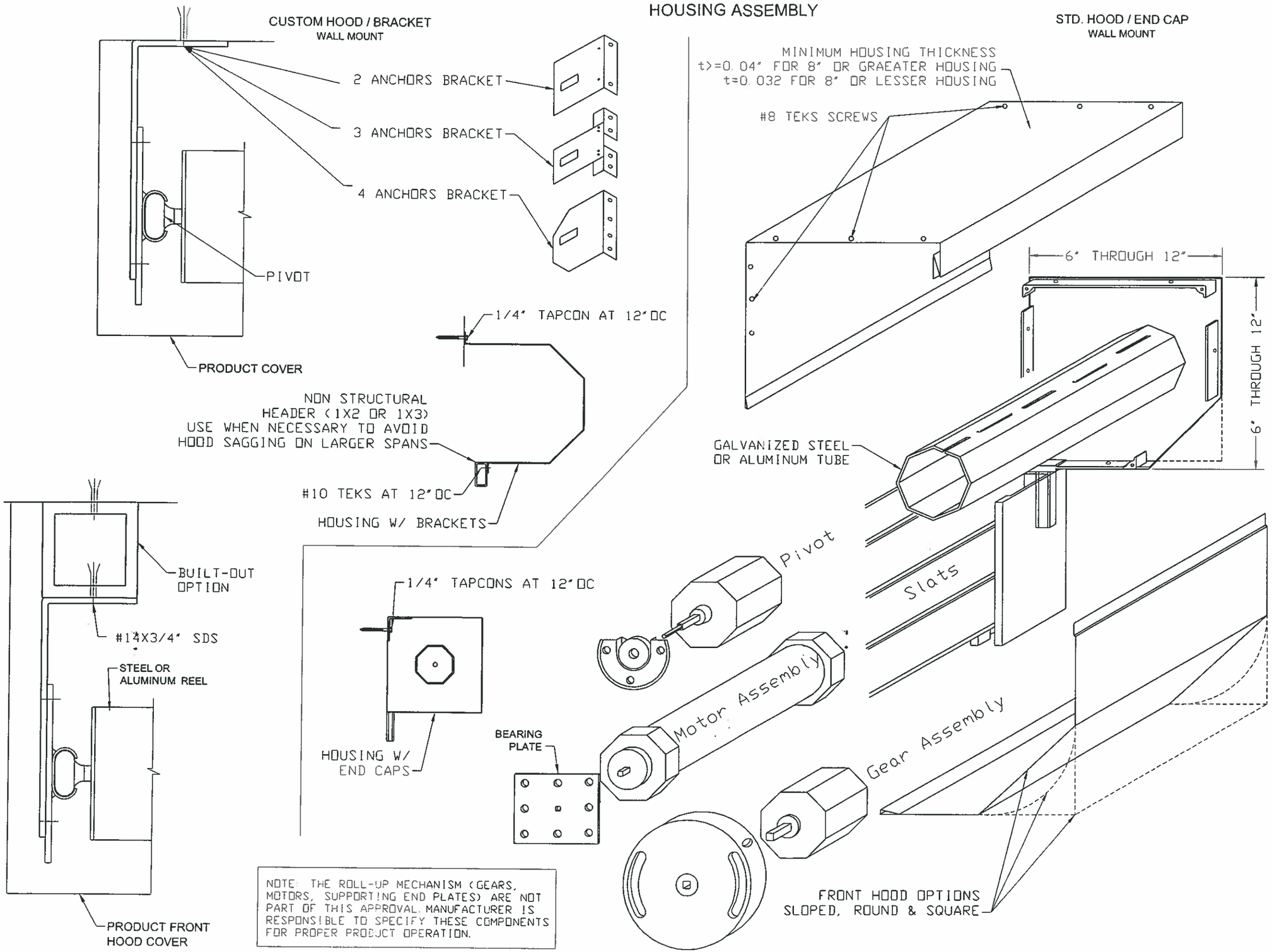

NOTE: THE ROLL-UP MECHANISM (GEARS, MOTORS, SUPPORTING END PLATES) ARE NOT PART OF THIS APPROVAL. MANUFACTURER IS RESPONSIBLE TO SPECIFY THESE COMPONENTS FOR PROPER PRODUCT OPERATION.

Manufacturer:
CROCI NORTH AMERICA
11600 ADELMO LANE
FORT MYERS, FL 33966
Tel.: (239) 278-3066
Fax: (239) 278-5977

PRODUCT:
ES 55 - ES 44
EXTRUDED ALUMINUM ROLLING SHUTTER

Engineering:
EngCo Inc.
CR 11234
5595 ORANGE DR. SUITE 201
DAVIE - FLORIDA 333314
www.engcoinc.com

STATE OF TEXAS
PEDRO FIGUEIREDO
102937
LICENSED
PROFESSIONAL ENGINEER

MAR 17 2014

Engineer Seal
Pedro De Figueiredo
TEXAS - PE 102937

Date: 03/18/2013
Scale: NA
Design by: PPMF

REVISION:
REPLACE DWG 10-102

Drawing Number
13-070