EYEWALL ARMOR 44mm ALUMINUM ROLL-UP SHUTTER

WITH END RETENTION SLATS AND RAILS

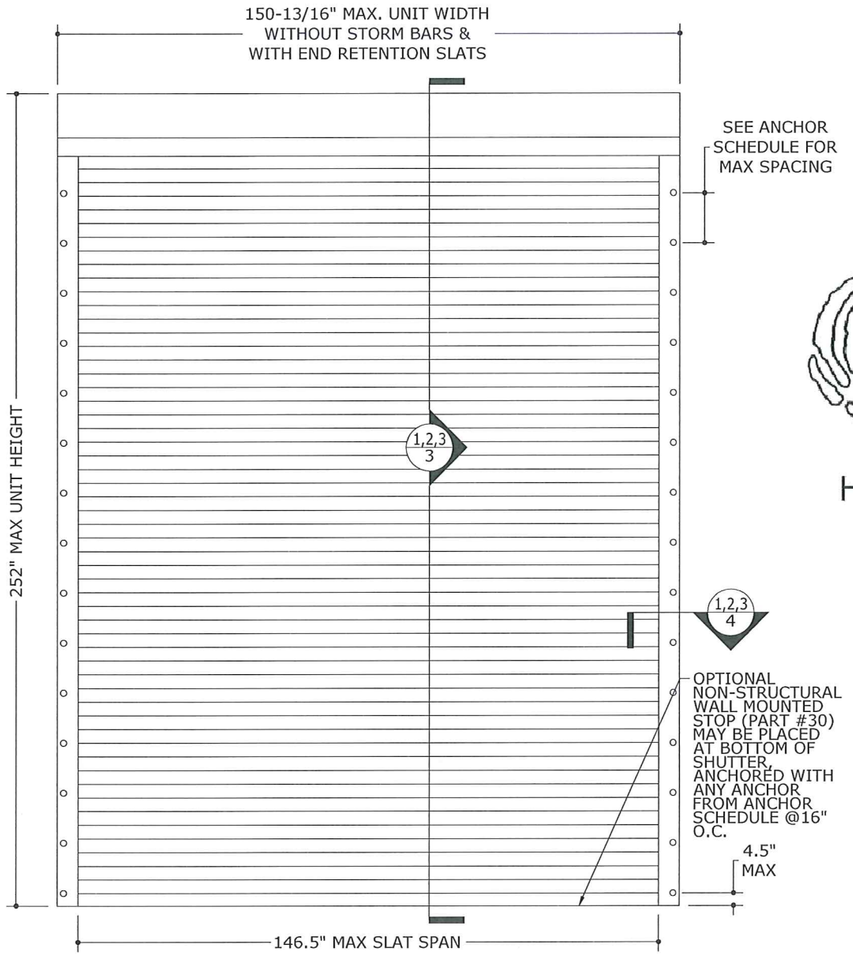

1 / 1 END RETENTION SHUTTER W/O STORM BARS

N.T.S. EXTERIOR ELEV

eyewall Armor™ HURRICANE PROTECTION

TABLE 1
SPAN SCHEDULE
NO STORM BARS

SLAT SPAN	ALLOWABLE DESIGN PRESSURE	
61.2"	+ 93.0 PSF	- 93.0 PSF
70.0"	+ 78.6 PSF	- 81.3 PSF
80.0"	+ 69.2 PSF	- 73.8 PSF
90.0"	+ 63.4 PSF	- 69.3 PSF
98.3"	+ 60.0 PSF	- 66.7 PSF
100.0"	+ 58.8 PSF	- 65.0 PSF
110.0"	+ 52.8 PSF	- 57.1 PSF
120.0"	+ 48.3 PSF	- 51.0 PSF
130.0"	+ 44.6 PSF	- 46.1 PSF
140.0"	+ 41.7 PSF	- 42.2 PSF
146.5"	+ 40.0 PSF	- 40.0 PSF

TABLE 1 NOTES:

- SLAT SPAN IS DEFINED AS THE DISTANCE BETWEEN RAILS FOR SINGLE SPAN ASSEMBLIES.
- LINEAR INTERPOLATION BETWEEN SHUTTER SPANS IS NOT PERMITTED. FOR SPANS BETWEEN THOSE INDICATED ABOVE, THE DESIGN PRESSURES FOR THE NEXT HIGHER SPAN SHALL BE USED.

TABLE 2
MINIMUM GLAZING SEPARATION
NO STORM BARS (ESSENTIAL FACILITIES ONLY)

SLAT SPAN	INSTALLATIONS ≤ 30' ABOVE GRADE	INSTALLATIONS > 30' ABOVE GRADE
61.2"	4.5"	4.5"
70.0"	4.8"	4.4"
80.0"	9.1"	9.1"
90.0"	6.3"	6.3"
98.3"	6.3"	6.3"
100.0"	9.4"	6.4"
110.0"	9.4"	6.8"
120.0"	9.4"	7.3"
130.0"	9.4"	7.8"
140.0"	9.4"	8.4"
146.5"	9.4"	8.8"

TABLE 2 NOTES:

- SLAT SPAN IS DEFINED AS THE DISTANCE BETWEEN RAILS FOR SINGLE SPAN ASSEMBLIES
- SEPARATION FROM GLAZING IS REQUIRED **ONLY** IN ESSENTIAL FACILITIES.
- LINEAR INTERPOLATION BETWEEN SHUTTER SPANS IS NOT PERMITTED. FOR SPANS BETWEEN THOSE INDICATED ABOVE, THE SEPARATION FROM GLASS FOR THE NEXT HIGHER SPAN SHALL BE USED.

GENERAL NOTES

1. THE SYSTEM DESCRIBED HEREIN HAS BEEN DESIGNED AND TESTED IN ACCORDANCE WITH THE 2006 INTERNATIONAL BUILDING CODE WITH TEXAS REVISIONS EFFECTIVE JANUARY 1, 2008 , PER ASTM E330, E1886, AND E1996 STANDARDS.
2. THE SYSTEM DESCRIBED HEREIN IS INTENDED FOR USE WITHIN TEXAS INLAND ZONE II, INLAND ZONE I AND SEAWARD ZONES.
3. NO 33-1/3% INCREASE IN ALLOWABLE STRESS HAS BEEN USED IN THE DESIGN OF THIS SYSTEM. WIND LOAD DURATION FACTOR Cd=1.6 HAS BEEN USED FOR WOOD ANCHOR DESIGN.
4. POSITIVE AND NEGATIVE DESIGN PRESSURES CALCULATED FOR USE WITH THIS SYSTEM SHALL BE DETERMINED PER SEPARATE ENGINEERING IN ACCORDANCE WITH THE GOVERNING CODE. PRESSURE REQUIREMENTS AS DETERMINED IN ACCORDANCE WITH ASCE 7 SHALL BE LESS THAN OR EQUAL TO THE POSITIVE OR NEGATIVE DESIGN PRESSURE CAPACITY VALUES LISTED HEREIN FOR ANY ASSEMBLY AS SHOWN.
5. DESIGN PRESSURES NOTED HEREIN ARE BASED ON MAXIMUM TESTED PRESSURES DIVIDED BY A 1.5 SAFETY FACTOR.
6. THE SYSTEM DETAILED HEREIN IS GENERIC AND DOES NOT PROVIDE INFORMATION FOR A SPECIFIC SITE. FOR SITE CONDITIONS DIFFERENT FROM THE CONDITIONS DETAILED HEREIN, A LICENSED ENGINEER OR REGISTERED ARCHITECT SHALL PREPARE SITE SPECIFIC DOCUMENTS FOR USE IN CONJUNCTION WITH THIS DOCUMENT.
7. ROLL-UP MECHANISM AND HOOD ASSEMBLY ARE NOT PART OF THIS APPROVAL.
8. THIS DOCUMENT CONTAINS INFORMATION RELEVANT TO THE NECESSARY STRUCTURAL REQUIREMENTS OF THE SYSTEM INSTALLATION. COMPONENTS AND FASTENERS NOT REFERENCED WHICH ARE PART OF THE INTERNAL FABRICATION OF THE SPECIFIED SYSTEMS OR ASSEMBLIES SHALL BE PER MANUFACTURER PUBLISHED SPECIFICATIONS.
9. PERMIT HOLDER SHALL VERIFY THE ADEQUACY OF THE EXISTING STRUCTURE TO WITHSTAND SUPERIMPOSED LOADS. WOOD BUCKS (BY OTHERS) SHALL BE ANCHORED PROPERLY TO TRANSFER LOADS TO THE EXISTING STRUCTURE.
10. ALL EXTRUSIONS SHALL BE MINIMUM 6063-T5 ALUMINUM ALLOY, UNLESS NOTED OTHERWISE.
11. EACH SHUTTER ASSEMBLY SHALL BEAR A PERMANENT LABEL ON THE BOTTOM OF THE HOOD FACING THE EXTERIOR WITH THE FOLLOWING MINIMUM INFORMATION:
    TOWN & COUNTRY INDUSTRIES
    FORT LAUDERDALE, FL
    MISSILE LEVEL D - ASTM E1886, E1996 & E330
12. ALL BOLTS & WASHERS SHALL BE ZINC COATED STEEL, GALVANIZED STEEL, OR STAINLESS STEEL WITH A MINIMUM TENSILE YIELD STRENGTH OF 60 KSI. ALL ALUMINUM 3/16"Ø OR 1/4"Ø POP RIVETS SHALL HAVE A MINIMUM SHEAR ULTIMATE STRENGTH OF 42ksi.
13. ALL STEEL IN CONTACT WITH ALUMINUM SHALL BE PAINTED OR PLATED AS PRESCRIBED IN THE FLORIDA BUILDING CODE.

FRANK L. BENNARDO, P.E.
96064
STATE OF FLORIDA
FRANK L. BENNARDO
96064
LICENSED
PROFESSIONAL ENGINEER
07/17/2015

FRANK L. BENNARDO, P.E.
160 SW 12th AVENUE
DEERFIELD BEACH, FL 33442
Ph: (954) 354-0660 Fax: (954) 354-0615
POWERED BY THE INNOVATIONS OF
ENGINEERING EXPRESS®
EXPERIENCE MORE AT WWW.ENGEXP.COM

Town & Country INDUSTRIES
Wholesale Aluminum and Building Products
A Division of ABC Supply Co., Inc.
400 WEST MCNAB ROAD
FT. LAUDERDALE, FL 33309

REMARKS	DRWN	CHKD	DATE
INIT ISSUE	KL	FLB	04/25/14
REV (TDI)	RWN	TSB	06/04/14
-	-	-	-
-	-	-	-
-	-	-	-

THIS DOCUMENT IS THE PROPERTY OF FRANK L. BENNARDO, P.E. AND SHALL NOT BE REPRODUCED IN WHOLE OR IN PART WITHOUT WRITTEN PERMISSION OF FRANK L. BENNARDO, P.E. * ALTERATIONS, ADDITIONS, HIGHLIGHTING, OR OTHER MARKINGS TO THIS DOCUMENT ARE NOT PERMITTED AND INVALIDATE OUR CERTIFICATION.

COPYRIGHT FRANK L. BENNARDO P.E.

14-1627a

SCALE: -

PAGE DESCRIPTION:
-
-

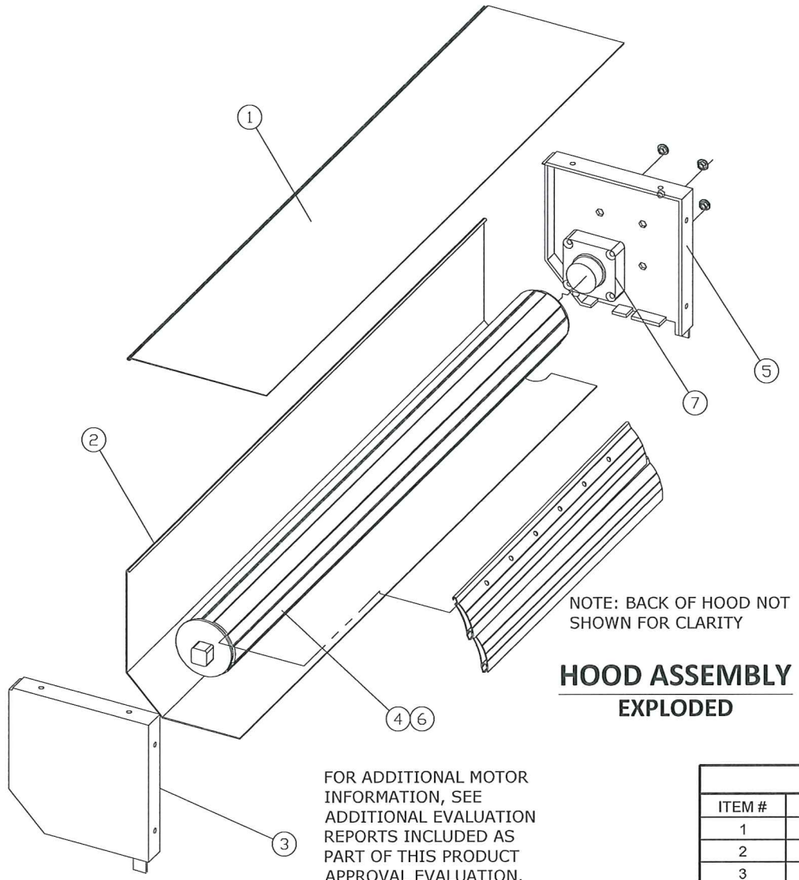

NOTE: BACK OF HOOD NOT SHOWN FOR CLARITY

HOOD ASSEMBLY
EXPLODED

FOR ADDITIONAL MOTOR INFORMATION, SEE ADDITIONAL EVALUATION REPORTS INCLUDED AS PART OF THIS PRODUCT APPROVAL EVALUATION.

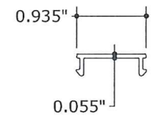

8 SIDE RAIL COVER
6" = 1'-0" 6063-T6 ALUM

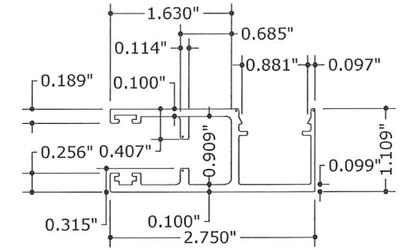

10 SIDE RAIL
6" = 1'-0" 6005-T5 ALUM

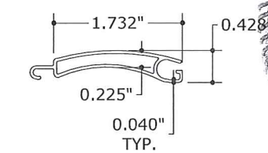

11 TYPICAL SLAT
6" = 1'-0" 6063-T6 ALUM

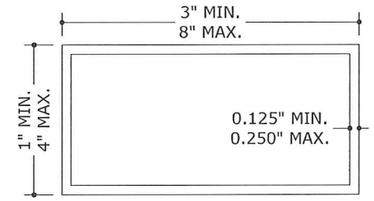

NOTE: SEE BILL OF MATERIALS (BOM) FOR TUBE SIZES AND MATERIALS

12-26 ALUMINUM TUBE
6" = 1'-0" MAT'L PER BOM

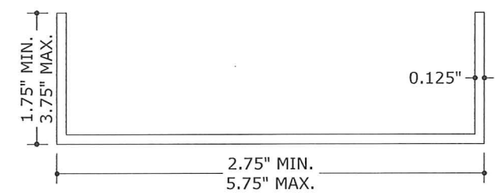

Fy = 30 ksi MINIMUM

27 STEEL REINFORCEMENT
6" = 1'-0" A36 GALV. STEEL OR STAINLESS STEEL

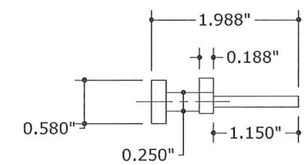

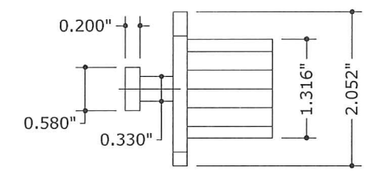

9 END RETENTION
6" = 1'-0" NYLON

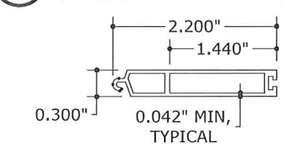

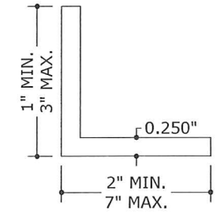

28 ALUMINUM ANGLE
6" = 1'-0" 6061-T6 OR 6005-T5 ALUM

29 OPTIONAL BOTTOM SLAT
6" = 1'-0" 6063-T6 ALUM

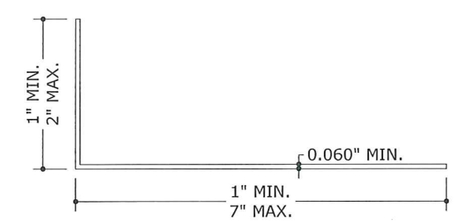

30 WALL MOUNTED STOP
6" = 1'-0" 6063-T6 ALUM

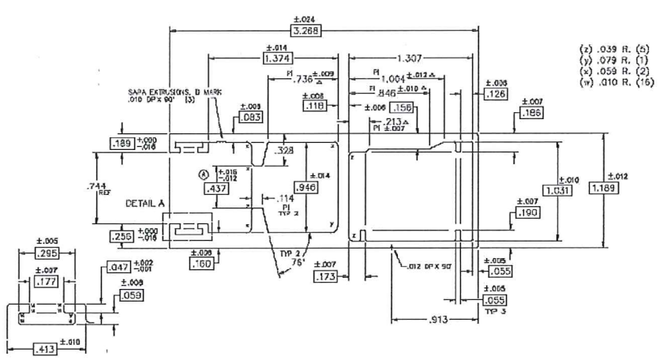

10b SIDE RAIL ALT. OPTION
NTS 6063-T6 ALUM

BILL OF MATERIALS		
ITEM #	DESCRIPTION	MATERIAL
1	HOOD TOP	3105-H14 ALUM
2	HOOD FACE	3105-H14 ALUM
3	SIDE CAP, RIGHT	CAST ALUM
4	MOTOR TUBE, 60-88mm DIAMETER, 3mm THICK	6063-T6 ALUM
4	MOTOR TUBE, 60-100mm DIAMETER, 3mm THICK	6063-T6 ALUM
5	SIDE CAP, LEFT	CAST ALUM
6	IDLE BEARING	NYLON/STEEL
7	MANUAL GEAR OR ELECTRONIC MOTOR	
8	SIDE RAIL COVER	6063-T6 MIN. ALUM
9	END RETENTION GUIDE	NYLON
10	SIDE RAIL, END RETENTION	6005-T5 ALUM
10b	SIDE RAIL, END RETENTION ALT. OPTION	6063-T6 ALUM
11	TYPICAL SLAT	6063-T6 ALUM
12	1"x3"x0.125" TUBE	6063-T6 ALUM
13	2"x3"x0.125" TUBE	6063-T6 ALUM
14	2"x4"x0.125" TUBE	6063-T6 ALUM
15	2"x5"x0.125" TUBE	6063-T6 ALUM
16	2"x3"x0.25" TUBE	6061-T6 OR 6005-T5 ALUM
17	2"x4"x0.25" TUBE	6061-T6 OR 6005-T5 ALUM
18	2"x5"x0.25" TUBE	6061-T6 OR 6005-T5 ALUM
19	2"x6"x0.125" TUBE	6063-T6 ALUM
20	2"x6"x0.25" TUBE	6061-T6 OR 6005-T5 ALUM
21	3"x3"x0.125" TUBE	6063-T6 ALUM
22	3"x3"x0.25" TUBE	6061-T6 OR 6005-T5 ALUM
23	4"x4"x0.125" TUBE	6063-T6 ALUM
24	4"x4"x0.25" TUBE	6061-T6 OR 6005-T5 ALUM
25	4"x6"x0.25" TUBE	6061-T6 OR 6005-T5 ALUM
26	4"x8"x0.25" TUBE	6061-T6 OR 6005-T5 ALUM
27	STEEL REINFORCEMENT (Fy = 30 ksi MIN.)	A36 OR STAINLESS STEEL
28	ALUMINUM ANGLE	6061-T6 OR 6005-T5 ALUM
29	OPTIONAL BOTTOM SLAT	6063-T5 ALUM
30	WALL MOUNTED STOP	6063-T6 ALUM

FRANK L. BENNARDO, P.E.
LIC#: 66437
07/17/2015
FRANK L. BENNARDO
LICENSED PROFESSIONAL ENGINEER
STATE OF FLORIDA
FRANK L. BENNARDO P.E.
160 SW 12th AVENUE, SUITE 108
DEERFIELD BEACH, FL 33442
Ph: (954) 354-0660 Fax: (954) 354-0443
POWERED BY THE INNOVATIONS OF
ENGINEERING EXPRESS®
EXPERIENCE MORE AT WWW.ENGEXP.COM

Town&Country INDUSTRIES
Wholesale Aluminum and Building Products
A Division of A&C Supply Co., Inc.
400 WEST MCNAB ROAD
FT. LAUDERDALE, FL 33309

REMARKS	DRWN	CHKD	DATE
INIT ISSUE	KL	FLB	04/25/14
REV (TDI)	RWN	TSB	06/04/14

THIS DOCUMENT IS THE PROPERTY OF FRANK L. BENNARDO, P.E. AND SHALL NOT BE REPRODUCED IN WHOLE OR IN PART WITHOUT THE WRITTEN CONSENT OF FRANK L. BENNARDO, P.E. * ALTERATIONS, ADDITIONS, HIGHLIGHTING, OR OTHER MARKINGS TO THIS DOCUMENT ARE NOT PERMITTED AND INVALIDATE OUR CERTIFICATION.

COPYRIGHT FRANK L. BENNARDO P.E.

14-1627a

SCALE: -

PAGE DESCRIPTION:
-
-

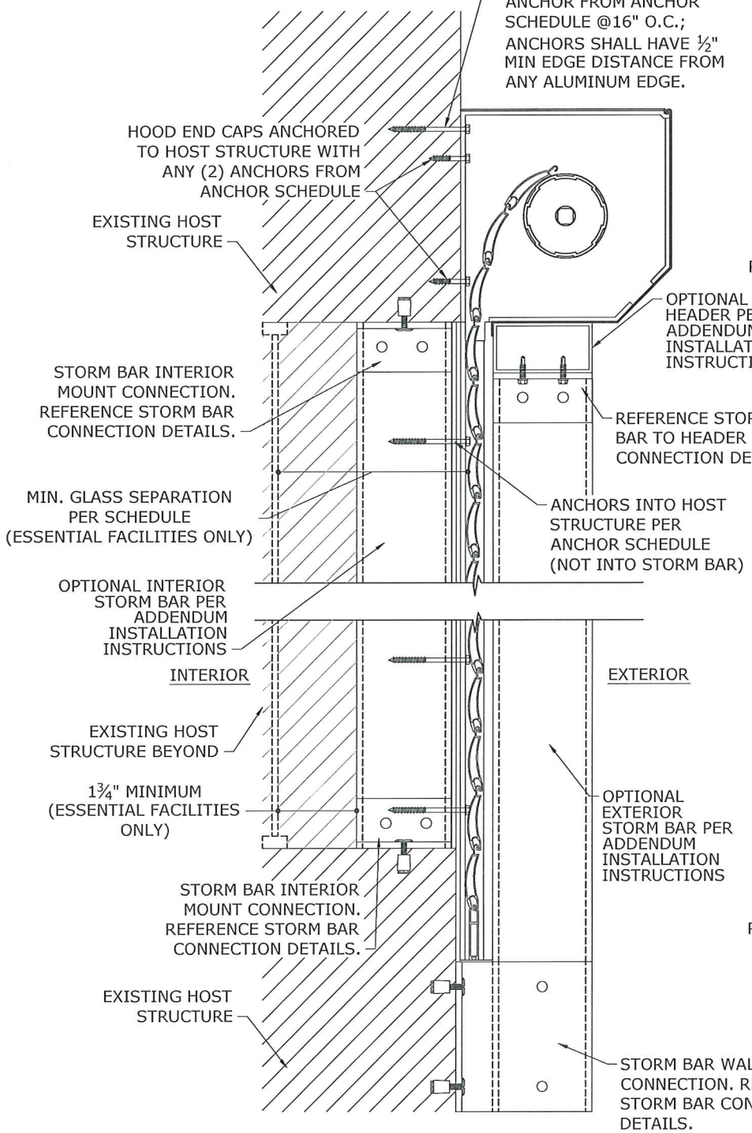

1/3 WALL MOUNT (SHOWN W/ OPTIONAL STORM BARS)

N.T.S. VERT SECTION

NOTE: FOR OPTIONAL MOUNTING CONDITIONS, REFERENCE ADDENDUM STORM BAR AND MULLION INSTALLATION INSTRUCTIONS.

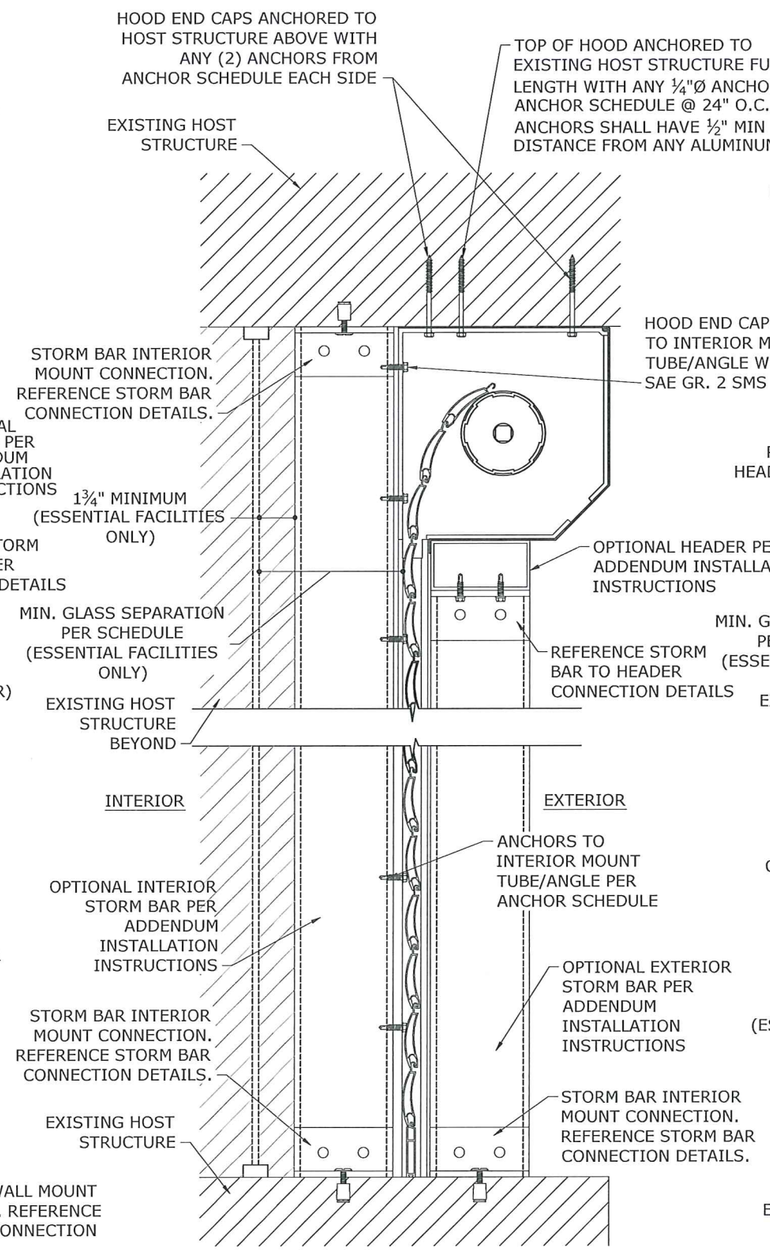

2/3 INTERIOR MOUNT (SHOWN W/ OPTIONAL STORM BARS)

N.T.S. VERT SECTION

NOTE: FOR OPTIONAL MOUNTING CONDITIONS, REFERENCE ADDENDUM STORM BAR AND MULLION INSTALLATION INSTRUCTIONS.

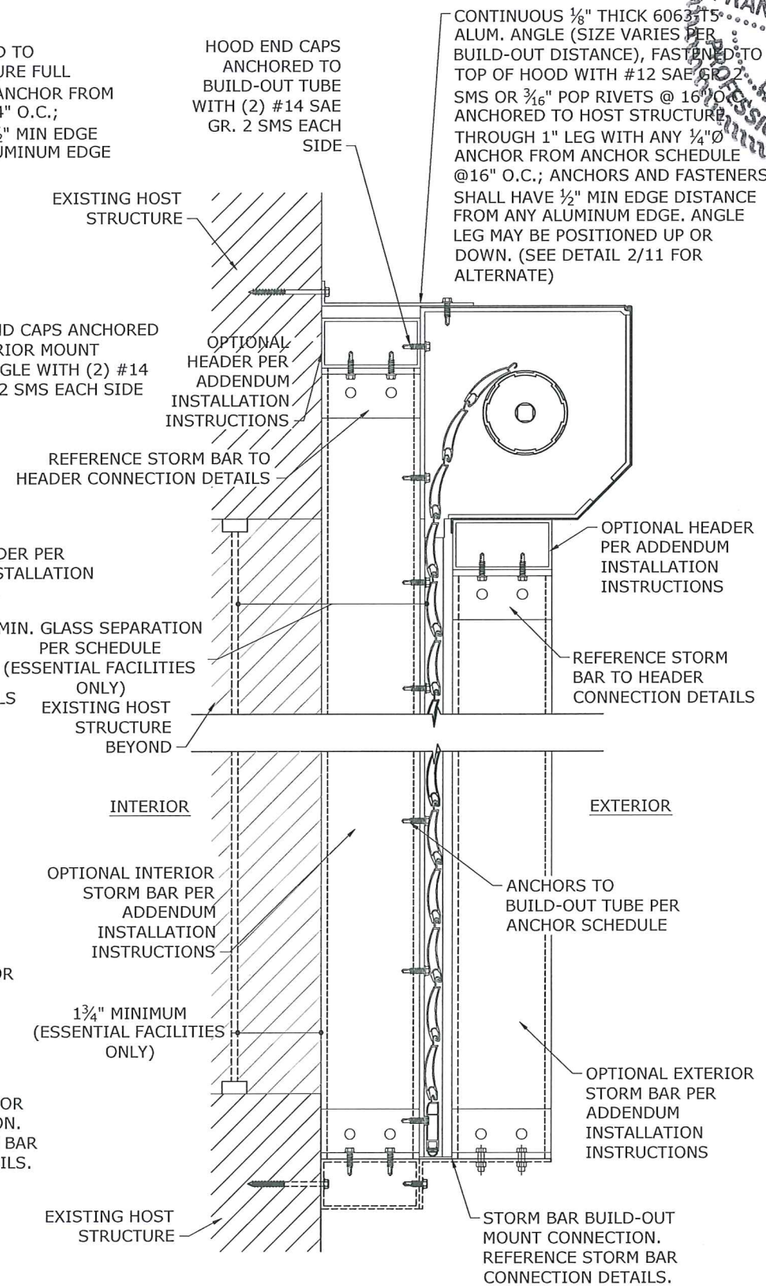

3/3 BUILD-OUT MOUNT (SHOWN W/ OPTIONAL STORM BARS)

N.T.S. VERT SECTION

NOTE: FOR OPTIONAL MOUNTING CONDITIONS, REFERENCE ADDENDUM STORM BAR AND MULLION INSTALLATION INSTRUCTIONS.

FRANK L. BENNARDO, P.E.
PE56064
STATE OF TEXAS
FRANK L. BENNARDO
56064
LICENSED PROFESSIONAL ENGINEER
07/17/2014

FRANK L. BENNARDO, P.E.
LICENSE #56064
160 SW 12th AVENUE
DEERFIELD BEACH, FL 33441
Ph: (954) 354-0660 Fax: (954) 354-0445
POWERED BY THE INNOVATION OF ENGINEERS
ENGINEERING EXPRESS®
EXPERIENCE MORE AT WWW.ENGEXP.COM

Town&Country INDUSTRIES
Wholesale Aluminum and Building Products
A Division of AGC Supply Co., Inc.
400 WEST MCNAB ROAD
FT. LAUDERDALE, FL 33309

REMARKS	DRWN	CHKD	DATE
INIT ISSUE	KL	FLB	04/25/14
REV (TDI)	RWN	TSB	06/04/14
-	-	-	-
-	-	-	-
-	-	-	-

THIS DOCUMENT IS THE PROPERTY OF FRANK L. BENNARDO, P.E AND SHALL NOT BE REPRODUCED IN WHOLE OR IN PART WITHOUT WRITTEN PERMISSION OF FRANK L. BENNARDO, P.E. * ALTERATIONS, ADDITIONS, HIGHLIGHTING, OR OTHER MARKINGS TO THIS DOCUMENT ARE NOT PERMITTED AND INVALIDATE OUR CERTIFICATION.

COPYRIGHT FRANK L. BENNARDO P.E.

14-1627a

SCALE: -

PAGE DESCRIPTION:
-
-

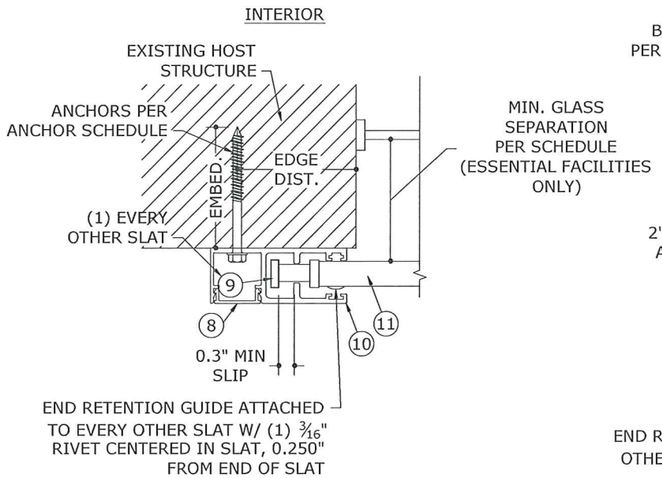

1/4 END RETENTION TYPICAL WALL MOUNT

N.T.S. HORIZ SECTION

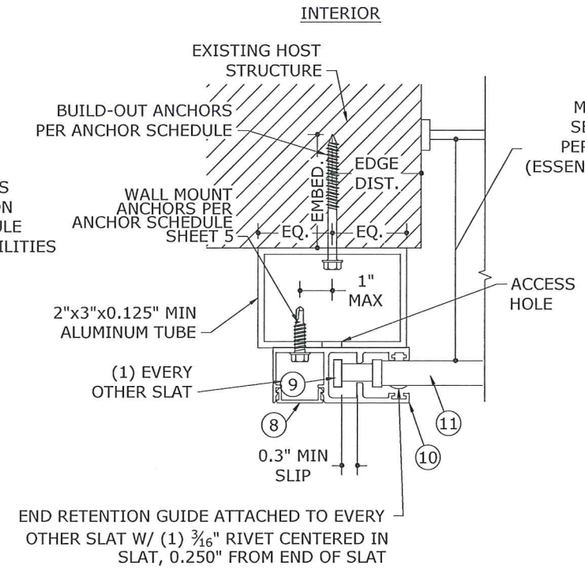

2/4 END RETENTION TYP. BUILD-OUT MOUNT

N.T.S. HORIZ SECTION

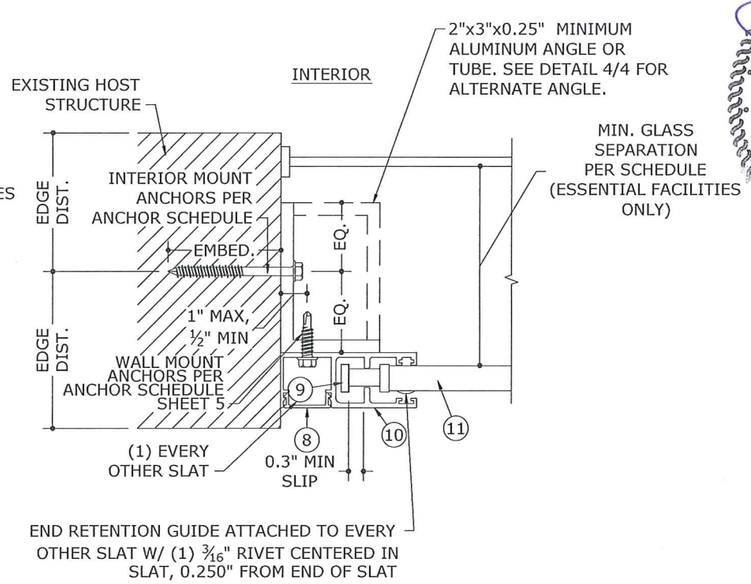

3/4 END RETENTION TYP. INTERIOR MOUNT

N.T.S. HORIZ SECTION

ANCHOR NOTES:

1. ANCHORS SHALL BE INSTALLED IN ACCORDANCE WITH MANUFACTURERS' RECOMMENDATIONS.
2. WHERE ANCHORS FASTEN TO NARROW FACE OF STUD FRAMING, ANCHOR SHALL BE LOCATED IN CENTER OF NOMINAL 2x (MIN) WOOD STUD (i.e. 3/4" EDGE DISTANCE IS ACCEPTABLE FOR ANCHORS TO WOOD FRAMING).
3. MINIMUM EMBEDMENT SHALL BE AS NOTED IN ANCHOR SCHEDULE. MINIMUM EMBEDMENT AND EDGE DISTANCE EXCLUDES STUCCO, FOAM, BRICK, AND OTHER WALL FINISHES.
4. ANCHOR SCHEDULE APPLIES TO ALL PRODUCTS CERTIFIED HEREIN, BUT ONLY PROVIDES MAXIMUM ALLOWABLE ANCHOR SPACING. MAXIMUM ALLOWABLE SPANS AND PRESSURES INDICATED IN SPAN SCHEDULE SHALL APPLY.
5. WHERE EXISTING STRUCTURE IS WOOD FRAMING, EXISTING CONDITIONS MAY VARY. FIELD VERIFY THAT FASTENERS ARE INTO ADEQUATE WOOD FRAMING MEMBERS, NOT INTO PLYWOOD. FASTENERS MAY BE INSTALLED THROUGH PLYWOOD PROVIDED THAT THEY ARE FULLY EMBEDDED INTO STRUCTURAL MATERIAL BEYOND.
6. WOOD BUCKS (BY OTHERS) SHALL BE ANCHORED PROPERLY TO TRANSFER LOADS TO THE EXISTING STRUCTURE.
7. MACHINE SCREWS SHALL HAVE MINIMUM OF 1/2" ENGAGEMENT OF THREADS IN BASE ANCHOR AND MAY HAVE EITHER A PAN HEAD, TRUSS HEAD, OR WAFER HEAD ("SIDEWALK BOLT") U.N.O.
8. SHEET METAL SCREWS SHALL BE INSTALLED WITH FULL ENGAGEMENT OF THREADS INTO METAL HOST STRUCTURE.
9. ▨ DESIGNATES ANCHOR CONDITIONS WHICH ARE NOT ACCEPTABLE FOR USE.
10. ANCHORS MAY BE INSTALLED TO HOLLOW BLOCK OR GROUT FILLED BLOCK AS INDICATED IN THE ANCHOR SCHEDULES ON SHEETS 5-7. FOR INSTALLATIONS TO BLOCK AS ILLUSTRATED IN THE ANCHOR SCHEDULES OF SHEETS 13-15, ALL BLOCKS MUST BE GROUT FILLED. WHEN INSTALLING ANCHORS TO GROUT FILLED BLOCK, CONTRACTOR SHALL ENSURE THAT THE ANCHOR PENETRATES THROUGH THE FACE SHELL INTO THE GROUTED CELL.

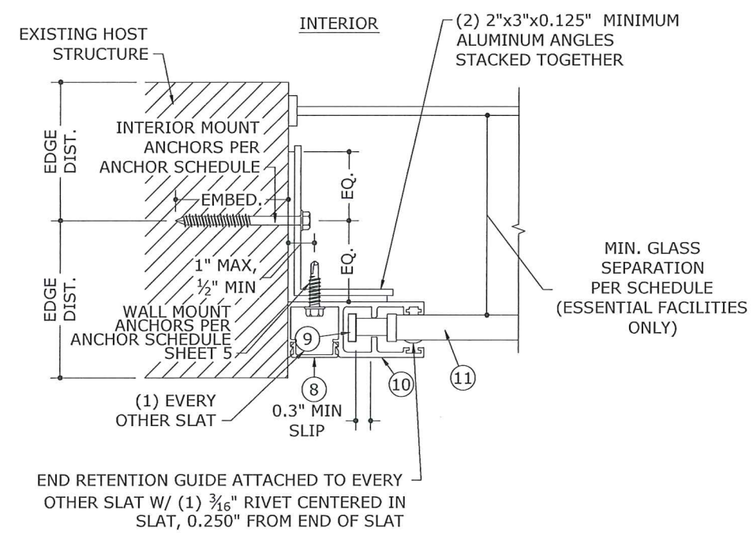

4/4 END RETENTION TYP. INTERIOR MOUNT

N.T.S. HORIZ SECTION

FRANK L. BENNARDO, P.E.
#PE96064
07/17/2014
STATE OF FLORIDA
FRANK L. BENNARDO
96064
PROFESSIONAL ENGINEER
FRANK L. BENNARDO, P.E.
160 SW 12th AVENUE
DEERFIELD BEACH, FL 33442
Ph: (954) 354-0660 Fax: (954) 354-0445
POWERED BY THE INNOVATION
ENGINEERING EXPRESS®
EXPERIENCE MORE AT WWW.ENGEXP.COM

Town&Country INDUSTRIES
Wholesale Aluminum and Building Products
A Division of ABC Supply Co., Inc.
400 WEST MCNAB ROAD
FT. LAUDERDALE, FL 33309

REMARKS	DRWN	CHKD	DATE
INIT ISSUE	KL	FLB	04/25/14
REV (TDI)	RWN	TSB	06/04/14

THIS DOCUMENT IS THE PROPERTY OF FRANK L. BENNARDO, P.E AND SHALL NOT BE REPRODUCED IN WHOLE OR IN PART WITHOUT THE WRITTEN CONSENT OF FRANK L. BENNARDO, P.E. * ALTERATIONS, ADDITIONS, HIGHLIGHTING, OR OTHER MARKINGS TO THIS DOCUMENT ARE NOT PERMITTED AND INVALIDATE OUR CERTIFICATION.
COPYRIGHT FRANK L. BENNARDO P.E.

14-1627a

SCALE: -

PAGE DESCRIPTION:
-
-

ANCHOR SCHEDULE: END RETENTION WALL MOUNT

MAY BE USED FOR MASONRY, WOOD, AND ALUMINUM CONNECTIONS

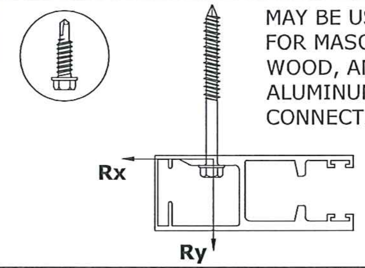

SLAT SPAN	DESIGN PRESSURE	Rx	Ry	MAXIMUM SPACING (O.C.)																
				1/4" ELCO ULTRACON TO 2700 PSI MIN. CONCRETE; 1.75" MIN. EMBEDMENT; 2.5" MIN. EDGE DISTANCE	1/4" SS ITW TAPCON TO 3192 PSI MIN. CONCRETE; 1.75" MIN. EMBEDMENT; 2.5" MIN. EDGE DISTANCE	5/16" ELCO ULTRACON TO 3500 PSI MIN. CONCRETE; 2" MIN. EMBEDMENT; 3.125" MIN. EDGE DISTANCE	5/16" ITW TAPCON TO 2899 PSI MIN. CONCRETE; 2.25" MIN. EMBEDMENT; 3.125" MIN. EDGE DISTANCE	5/16" ITW TAPCON TO GROUT-FILLED CONCRETE BLOCK; 2.25" MIN. EMBEDMENT; 4" MIN. EDGE DISTANCE	5/16" ITW TAPCON TO HOLLOW CONCRETE BLOCK; 1.75" MIN. EMBEDMENT; 4" MIN. EDGE DISTANCE	1/4" POWERS POWER-BOLT TO 3000 PSI MIN. CONCRETE; 2.5" MIN. EMBEDMENT; 3" MIN. EDGE DISTANCE	1/4" ALL-POINTS SOLID-SET TO 3000 PSI MIN. CONCRETE; 0.875" MIN. EMBEDMENT; 3" MIN. EDGE DISTANCE	1/4" ALL-POINTS SOLID-SET TO HOLLOW BLOCK; 0.875" MIN. EMBEDMENT; 3" MIN. EDGE DISTANCE	1/4" LAG SCREW TO G=0.55 MIN WOOD; 1.5" MIN. EMBEDMENT; 0.75" MIN. EDGE DISTANCE	5/16" LAG SCREW TO G=0.42 MIN WOOD; 2" MIN. EMBEDMENT; 0.75" MIN. EDGE DISTANCE	#14 WOOD SCREW TO G=0.55 MIN WOOD; 1.5" MIN. EMBEDMENT; 0.75" MIN. EDGE DISTANCE	#14 410 SS SMS W/ FULL THREAD PENETRATION OR 1/4-20 410 SS THRU-BOLT TO 0.125" MIN. 6063-T6 ALUM; 0.5" MIN. EDGE DISTANCE	5/16" 410 SS SMS W/ FULL THREAD PENETRATION OR 5/16-18 410 SS THRU-BOLT TO 0.25" MIN. 6063-T6 ALUM; 0.625" MIN. EDGE DISTANCE	3/8" POWERS WEDGE BOLT TO 3000 PSI MIN. CONCRETE; 3.5" MIN. EMBEDMENT; 4.5" MIN. EDGE DISTANCE	3/8" ELCO CONFLEX TO 1819 PSI MIN. CONCRETE; 3.5" MIN. EMBEDMENT; 3.75" MIN. EDGE DISTANCE	3/8" ELCO CONFLEX TO 4510 PSI MIN. CONCRETE; 3.5" MIN. EMBEDMENT; 3.75" MIN. EDGE DISTANCE
62"	+/- 37.5 PSF	0.0 LB/FT	96.9 LB/FT	12.0"	12.0"	12.0"	12.0"	12.0"	12.0"	12.0"	12.0"	12.0"	12.0"	12.0"	12.0"	12.0"	12.0"	12.0"	12.0"	12.0"
	+/- 42.1 PSF	0.0 LB/FT	108.8 LB/FT	12.0"	12.0"	12.0"	12.0"	12.0"	12.0"	12.0"	12.0"	12.0"	12.0"	12.0"	12.0"	12.0"	12.0"	12.0"	12.0"	12.0"
	+/- 46.0 PSF	0.0 LB/FT	118.8 LB/FT	12.0"	12.0"	12.0"	12.0"	12.0"	12.0"	12.0"	12.0"	12.0"	12.0"	12.0"	12.0"	12.0"	12.0"	12.0"	12.0"	12.0"
	+/- 50.0 PSF	0.0 LB/FT	129.2 LB/FT	12.0"	12.0"	12.0"	12.0"	12.0"	12.0"	12.0"	12.0"	12.0"	12.0"	12.0"	12.0"	12.0"	12.0"	12.0"	12.0"	12.0"
	+/- 56.4 PSF	0.0 LB/FT	145.7 LB/FT	12.0"	12.0"	12.0"	12.0"	12.0"	12.0"	12.0"	12.0"	12.0"	12.0"	12.0"	12.0"	12.0"	12.0"	12.0"	12.0"	12.0"
	+/- 68.0 PSF	0.0 LB/FT	175.7 LB/FT	12.0"	12.0"	12.0"	12.0"	12.0"	12.0"	12.0"	12.0"	12.0"	12.0"	12.0"	12.0"	12.0"	12.0"	12.0"	12.0"	12.0"
	+/- 76.0 PSF	0.0 LB/FT	196.3 LB/FT	12.0"	12.0"	12.0"	12.0"	12.0"	12.0"	12.0"	12.0"	12.0"	12.0"	12.0"	12.0"	12.0"	12.0"	12.0"	12.0"	12.0"
	+/- 93.0 PSF	0.0 LB/FT	240.3 LB/FT	12.0"	12.0"	12.0"	12.0"	12.0"	10.4"	12.0"	12.0"	12.0"	12.0"	12.0"	12.0"	12.0"	10.7"	12.0"	12.0"	12.0"
72"	+/- 37.5 PSF	0.0 LB/FT	112.5 LB/FT	12.0"	12.0"	12.0"	12.0"	12.0"	12.0"	12.0"	12.0"	12.0"	12.0"	12.0"	12.0"	12.0"	12.0"	12.0"	12.0"	12.0"
	+/- 42.1 PSF	0.0 LB/FT	126.3 LB/FT	12.0"	12.0"	12.0"	12.0"	12.0"	12.0"	12.0"	12.0"	12.0"	12.0"	12.0"	12.0"	12.0"	12.0"	12.0"	12.0"	12.0"
	+/- 46.0 PSF	0.0 LB/FT	138.0 LB/FT	12.0"	12.0"	12.0"	12.0"	12.0"	12.0"	12.0"	12.0"	12.0"	12.0"	12.0"	12.0"	12.0"	12.0"	12.0"	12.0"	12.0"
	+/- 50.0 PSF	0.0 LB/FT	150.0 LB/FT	12.0"	12.0"	12.0"	12.0"	12.0"	12.0"	12.0"	12.0"	12.0"	12.0"	12.0"	12.0"	12.0"	12.0"	12.0"	12.0"	12.0"
	+/- 56.4 PSF	0.0 LB/FT	169.2 LB/FT	12.0"	12.0"	12.0"	12.0"	12.0"	12.0"	12.0"	12.0"	12.0"	12.0"	12.0"	12.0"	12.0"	12.0"	12.0"	12.0"	12.0"
	+/- 68.0 PSF	32.0 LB/FT	204.0 LB/FT	12.0"	12.0"	12.0"	12.0"	12.0"	11.5"	12.0"	12.0"	12.0"	12.0"	12.0"	12.0"	12.0"	12.0"	12.0"	12.0"	12.0"
	+/- 76.0 PSF	114.8 LB/FT	228.0 LB/FT	12.0"	12.0"	12.0"	12.0"	12.0"	8.9"	12.0"	12.0"	11.1"	11.9"	10.8"	11.4"	11.5"	10.3"	12.0"	12.0"	12.0"
	+/- 93.0 PSF	291.3 LB/FT	279.0 LB/FT	9.7"	10.6"	12.0"	12.0"	12.0"	6.1"	12.0"	11.7"	6.7"	5.8"	5.1"	5.8"	8.0"	7.7"	12.0"	12.0"	12.0"
84"	+/- 37.5 PSF	0.0 LB/FT	131.3 LB/FT	12.0"	12.0"	12.0"	12.0"	12.0"	12.0"	12.0"	12.0"	12.0"	12.0"	12.0"	12.0"	12.0"	12.0"	12.0"	12.0"	12.0"
	+/- 42.1 PSF	55.2 LB/FT	147.4 LB/FT	12.0"	12.0"	12.0"	12.0"	12.0"	12.0"	12.0"	12.0"	12.0"	12.0"	12.0"	12.0"	12.0"	12.0"	12.0"	12.0"	12.0"
	+/- 46.0 PSF	106.0 LB/FT	161.0 LB/FT	12.0"	12.0"	12.0"	12.0"	12.0"	12.0"	12.0"	12.0"	12.0"	12.0"	12.0"	12.0"	12.0"	12.0"	12.0"	12.0"	12.0"
	+/- 50.0 PSF	158.0 LB/FT	175.0 LB/FT	12.0"	12.0"	12.0"	12.0"	12.0"	10.1"	12.0"	12.0"	11.4"	10.3"	9.1"	10.2"	12.0"	12.0"	12.0"	12.0"	12.0"
	+/- 56.4 PSF	241.3 LB/FT	197.4 LB/FT	12.0"	12.0"	12.0"	12.0"	12.0"	8.1"	12.0"	12.0"	8.7"	7.2"	6.3"	7.3"	10.8"	10.5"	12.0"	12.0"	12.0"
	+/- 68.0 PSF	392.0 LB/FT	238.0 LB/FT	8.7"	9.5"	12.0"	12.0"	12.0"	6.0"	11.2"	10.6"	6.0"	4.6"	4.0"	4.8"	8.1"	8.2"	12.0"	12.0"	12.0"
	+/- 76.0 PSF	495.9 LB/FT	266.0 LB/FT	7.2"	7.8"	12.0"	12.0"	10.5"	5.1"	9.4"	8.8"	5.0"	3.7"	3.2"	3.8"	6.9"	7.1"	12.0"	12.0"	12.0"
	+/- 93.0 PSF	716.4 LB/FT	325.5 LB/FT	5.2"	5.7"	9.8"	9.6"	7.6"	3.8"	7.0"	6.4"	3.7"	2.6"	2.3"	2.7"	5.3"	5.5"	12.0"	12.0"	12.0"
96"	+/- 37.5 PSF	219.0 LB/FT	150.0 LB/FT	12.0"	12.0"	12.0"	12.0"	12.0"	10.0"	12.0"	12.0"	10.3"	8.2"	7.1"	8.3"	12.0"	12.0"	12.0"	12.0"	12.0"
	+/- 42.1 PSF	292.1 LB/FT	168.4 LB/FT	11.9"	12.0"	12.0"	12.0"	12.0"	8.3"	12.0"	12.0"	8.3"	6.3"	5.5"	6.5"	11.3"	11.4"	12.0"	12.0"	12.0"
	+/- 46.0 PSF	354.0 LB/FT	184.0 LB/FT	10.1"	11.0"	12.0"	12.0"	12.0"	7.2"	12.0"	12.0"	7.1"	5.3"	4.6"	5.4"	9.9"	10.2"	12.0"	12.0"	12.0"
	+/- 50.0 PSF	417.4 LB/FT	200.0 LB/FT	8.8"	9.6"	12.0"	12.0"	12.0"	6.4"	11.7"	10.8"	6.2"	4.5"	3.9"	4.7"	8.8"	9.1"	12.0"	12.0"	12.0"
	+/- 56.4 PSF	518.8 LB/FT	225.6 LB/FT	7.3"	7.9"	12.0"	12.0"	10.7"	5.4"	9.8"	9.0"	5.1"	3.7"	3.2"	3.8"	7.5"	7.9"	12.0"	12.0"	12.0"
	+/- 68.0 PSF	702.2 LB/FT	272.0 LB/FT	5.6"	6.0"	10.4"	10.3"	8.1"	4.2"	7.5"	6.9"	3.9"	2.7"	2.4"	2.9"	5.9"	6.3"	12.0"	12.0"	12.0"
	+/- 76.0 PSF	828.4 LB/FT	304.0 LB/FT	4.8"	5.2"	9.0"	8.8"	7.0"	3.7"	6.5"	5.9"	3.4"	2.3"	2.0"	2.4"	5.1"	5.5"	12.0"	12.0"	12.0"
108"	+/- 37.5 PSF	413.5 LB/FT	168.8 LB/FT	9.3"	10.1"	12.0"	12.0"	12.0"	7.0"	12.0"	11.5"	6.5"	4.6"	4.0"	4.8"	9.7"	10.3"	12.0"	12.0"	12.0"
	+/- 42.1 PSF	500.6 LB/FT	189.5 LB/FT	7.9"	8.5"	12.0"	12.0"	11.4"	6.0"	10.7"	9.7"	5.5"	3.9"	3.3"	4.0"	8.3"	9.0"	12.0"	12.0"	12.0"
	+/- 46.0 PSF	574.3 LB/FT	207.0 LB/FT	7.0"	7.5"	12.0"	12.0"	10.1"	5.3"	9.4"	8.6"	4.9"	3.4"	2.9"	3.5"	7.4"	8.1"	12.0"	12.0"	12.0"
	+/- 50.0 PSF	649.9 LB/FT	225.0 LB/FT	6.2"	6.7"	11.6"	11.4"	9.0"	4.8"	8.5"	7.7"	4.4"	3.0"	2.6"	3.1"	6.7"	7.3"	12.0"	12.0"	12.0"
	+/- 56.4 PSF	770.6 LB/FT	253.8 LB/FT	5.3"	5.7"	9.9"	9.8"	7.7"	4.1"	7.2"	6.6"	3.7"	2.5"	2.2"	2.7"	5.8"	6.4"	12.0"	12.0"	12.0"
	+/- 68.0 PSF	988.9 LB/FT	306.0 LB/FT	4.2"	4.5"	7.9"	7.7"	6.1"		5.8"	5.2"				2.1"	4.6"	5.2"	12.0"	12.0"	12.0"
120"	+/- 37.5 PSF	591.7 LB/FT	187.5 LB/FT	7.0"	7.5"	12.0"	12.0"	10.1"	5.5"	9.5"	8.6"	4.9"	3.3"	2.8"	3.5"	7.7"	8.5"	12.0"	12.0"	12.0"
	+/- 42.1 PSF	693.4 LB/FT	210.5 LB/FT	6.0"	6.5"	11.3"	11.1"	8.7"	4.7"	8.3"	7.4"	4.2"	2.8"	2.4"	3.0"	6.7"	7.4"	12.0"	12.0"	12.0"
	+/- 46.0 PSF	779.5 LB/FT	230.0 LB/FT	5.4"	5.8"	10.1"	9.9"	7.8"	4.3"	7.4"	6.7"	3.8"	2.5"	2.2"	2.7"	6.0"	6.7"	12.0"	12.0"	12.0"
	+/- 50.0 PSF	867.8 LB/FT	250.0 LB/FT	4.8"	5.2"	9.1"	9.0"	7.0"	3.9"	6.7"	6.0"	3.4"	2.3"		2.4"	5.5"	6.1"	12.0"	12.0"	12.0"
	+/- 56.4 PSF	1008.7 LB/FT	282.0 LB/FT	4.2"	4.5"	7.9"	7.8"	6.1"	3.4"	5.8"	5.2"	2.9"			2.1"	4.8"	5.4"	12.0"	12.0"	12.0"
132"	+/- 37.5 PSF	761.4 LB/FT	206.3 LB/FT	5.6"	6.0"	10.5"	10.4"	8.1"	4.5"	7.8"	6.9"	3.9"	2.6"	2.2"	2.7"	6.4"	7.3"	12.0"	12.0"	12.0"
	+/- 42.1 PSF	878.6 LB/FT	231.6 LB/FT	4.9"	5.3"	9.2"	9.1"	7.0"	4.0"	6.8"	6.1"	3.4"	2.3"		2.4"	5.6"	6.4"	12.0"	12.0"	12.0"
	+/- 46.0 PSF	977.7 LB/FT	253.0 LB/FT	4.4"	4.7"	8.3"	8.2"	6.3"		6.1"	5.5"	3.1"	2.0"		2.1"	5.1"	5.8"	12.0"	12.0"	12.0"
146.5"	+/- 37.5 PSF	961.3 LB/FT	228.9 LB/FT	4.5"	4.9"	8.6"	8.5"	6.5"		6.4"	5.7"	3.2"	2.1"		2.2"	5.4"	6.2"	12.0"	12.0"	12.0"
	+/- 42.1 PSF	1098.1 LB/FT	257.0 LB/FT	4.0"	4.3"	7.5"	7.4"	5.7"		5.6"	5.0"					4.7"	5.5"	12.0"	12.0"	12.0"
	+/- 46.0 PSF	1213.8 LB/FT	280.8 LB/FT		3.9"	6.8"	6.7"	5.2"		5.1"	4.5"					4.3"	5.0"	12.0"	12.0"	12.0"

ANCHOR NOTES: SEE SHEET 4 FOR ANCHOR NOTES.

FRANK L. BENNARDO, P.E. #PE96064 — STATE OF TEXAS — LICENSED PROFESSIONAL ENGINEER — 07/17/2015

FRANK L. BENNARDO, P.E.
160 SW 12th AVENUE, SUITE 106
DEERFIELD BEACH, FL 33442
PH: (954) 354-0660 FAX: (954) 354-0443
POWERED BY THE INNOVATION OF ENGINEERING EXPRESS® — EXPERIENCE MORE AT WWW.ENGEXP.COM

Town & Country INDUSTRIES — Wholesale Aluminum and Building Products — A Division of ABC Supply Co., Inc.
400 WEST MCNAB ROAD
FT. LAUDERDALE, FL 33309

REMARKS	DRWN	CHKD	DATE
INIT ISSUE	KL	FLB	04/25/14
REV (TDI)	RWN	TSB	06/04/14
-	-	-	-
-	-	-	-

THIS DOCUMENT IS THE PROPERTY OF FRANK L. BENNARDO, P.E. AND SHALL NOT BE REPRODUCED IN WHOLE OR PART WITHOUT WRITTEN CONSENT OF FRANK L. BENNARDO, P.E. ALTERATIONS, ADDITIONS, HIGHLIGHTING, OR OTHER MARKINGS TO THIS DOCUMENT ARE NOT PERMITTED AND INVALIDATE OUR CERTIFICATION.

COPYRIGHT FRANK L. BENNARDO P.E.

14-1627a

SCALE: -

PAGE DESCRIPTION:
-
-

ANCHOR SCHEDULE: END RETENTION BUILD-OUT MOUNT

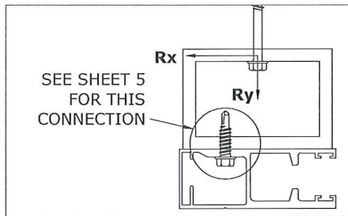

SLAT SPAN	DESIGN PRESSURE	Rx	Ry	1/4" ELCO ULTRACON TO 2700 PSI MIN. CONCRETE; 1.75" MIN. EMBEDMENT; 2.5" MIN. EDGE DISTANCE	1/4" SS ITW TAPCON TO 3192 PSI MIN. CONCRETE; 1.75" MIN. EMBEDMENT; 2.5" MIN. EDGE DISTANCE	5/16" ELCO ULTRACON TO 3500 PSI MIN. CONCRETE; 2" MIN. EMBEDMENT; 3.125" MIN. EDGE DISTANCE	5/16" ITW TAPCON TO 2899 PSI MIN. CONCRETE; 2.25" MIN. EMBEDMENT; 3.125" MIN. EDGE DISTANCE	5/16" ITW TAPCON TO GROUT-FILLED CONCRETE BLOCK; 2.25" MIN. EMBEDMENT; 4" MIN. EDGE DISTANCE	5/16" ITW TAPCON TO HOLLOW CONCRETE BLOCK; 1.75" MIN. EMBEDMENT; 4" MIN. EDGE DISTANCE	1/4" POWERS POWER-BOLT TO 3000 PSI MIN. CONCRETE; 2.5" MIN. EMBEDMENT; 3" MIN. EDGE DISTANCE	1/4" ALL-POINTS SOLID-SET TO 3000 PSI MIN. CONCRETE; 0.875" MIN. EMBEDMENT; 3" MIN. EDGE DISTANCE	1/4" ALL-POINTS SOLID-SET TO HOLLOW BLOCK; 0.875" MIN. EMBEDMENT; 3" MIN. EDGE DISTANCE	1/4" LAG SCREW TO G=0.55 MIN WOOD; 1.5" MIN. EMBEDMENT; 0.75" MIN. EDGE DISTANCE	5/16" LAG SCREW TO G=0.42 MIN WOOD; 2" MIN. EMBEDMENT; 0.75" MIN. EDGE DISTANCE	#14 WOOD SCREW TO G=0.55 MIN WOOD; 1.5" MIN. EMBEDMENT; 0.75" MIN. EDGE DISTANCE	#14 410 SS SMS W/ FULL THREAD PENETRATION OR 1/4-20 410 SS THRU-BOLT TO 0.125" MIN. 6063-T6 ALUM; 0.5" MIN. EDGE DISTANCE	5/16" 410 SS SMS W/ FULL THREAD PENETRATION OR 5/16-18 410 SS THRU-BOLT TO 0.25" MIN. 6063-T6 ALUM; 0.625" MIN. EDGE DISTANCE	3/8" POWERS WEDGE BOLT TO 3000 PSI MIN. CONCRETE; 3.5" MIN. EMBEDMENT; 4.5" MIN. EDGE DISTANCE	3/8" ELCO CONPLEX TO 1819 PSI MIN. CONCRETE; 3.5" MIN. EMBEDMENT; 3.75" MIN. EDGE DISTANCE	3/8" ELCO CONPLEX TO 4519 PSI MIN. CONCRETE; 3.5" MIN. EMBEDMENT; 3.75" MIN. EDGE DISTANCE
				MAXIMUM SPACING (O.C.)																
62"	+/- 37.5 PSF	0.0 LB/FT	161.5 LB/FT	12.0"	12.0"	12.0"	12.0"	12.0"	12.0"	12.0"	12.0"	12.0"	12.0"	12.0"	12.0"	12.0"	12.0"	12.0"	12.0"	12.0"
	+/- 42.1 PSF	0.0 LB/FT	181.3 LB/FT	12.0"	12.0"	12.0"	12.0"	12.0"	12.0"	12.0"	12.0"	12.0"	12.0"	12.0"	12.0"	12.0"	12.0"	12.0"	12.0"	12.0"
	+/- 46.0 PSF	0.0 LB/FT	198.1 LB/FT	12.0"	12.0"	12.0"	12.0"	12.0"	12.0"	12.0"	12.0"	12.0"	12.0"	12.0"	12.0"	12.0"	12.0"	12.0"	12.0"	12.0"
	+/- 50.0 PSF	0.0 LB/FT	215.3 LB/FT	12.0"	12.0"	12.0"	12.0"	12.0"	11.6"	12.0"	12.0"	12.0"	12.0"	12.0"	12.0"	12.0"	12.0"	12.0"	12.0"	12.0"
	+/- 56.4 PSF	0.0 LB/FT	242.9 LB/FT	12.0"	12.0"	12.0"	12.0"	12.0"	10.3"	12.0"	12.0"	12.0"	12.0"	12.0"	12.0"	10.6"	12.0"	12.0"	12.0"	12.0"
	+/- 68.0 PSF	0.0 LB/FT	292.8 LB/FT	12.0"	12.0"	12.0"	12.0"	12.0"	8.6"	12.0"	12.0"	12.0"	12.0"	12.0"	12.0"	10.5"	8.8"	12.0"	12.0"	12.0"
	+/- 76.0 PSF	0.0 LB/FT	327.3 LB/FT	12.0"	12.0"	12.0"	12.0"	12.0"	7.7"	12.0"	12.0"	11.6"	12.0"	12.0"	12.0"	9.4"	7.9"	12.0"	12.0"	12.0"
	+/- 93.0 PSF	0.0 LB/FT	400.5 LB/FT	12.0"	12.0"	12.0"	12.0"	12.0"	6.3"	12.0"	12.0"	9.5"	12.0"	12.0"	12.0"	7.7"	6.4"	12.0"	12.0"	12.0"
72"	+/- 37.5 PSF	0.0 LB/FT	187.5 LB/FT	12.0"	12.0"	12.0"	12.0"	12.0"	12.0"	12.0"	12.0"	12.0"	12.0"	12.0"	12.0"	12.0"	12.0"	12.0"	12.0"	12.0"
	+/- 42.1 PSF	0.0 LB/FT	210.5 LB/FT	12.0"	12.0"	12.0"	12.0"	12.0"	11.9"	12.0"	12.0"	12.0"	12.0"	12.0"	12.0"	12.0"	12.0"	12.0"	12.0"	12.0"
	+/- 46.0 PSF	0.0 LB/FT	230.0 LB/FT	12.0"	12.0"	12.0"	12.0"	12.0"	10.9"	12.0"	12.0"	12.0"	12.0"	12.0"	12.0"	12.0"	11.2"	12.0"	12.0"	12.0"
	+/- 50.0 PSF	0.0 LB/FT	250.1 LB/FT	12.0"	12.0"	12.0"	12.0"	12.0"	10.0"	12.0"	12.0"	12.0"	12.0"	12.0"	12.0"	12.0"	10.3"	12.0"	12.0"	12.0"
	+/- 56.4 PSF	0.0 LB/FT	282.1 LB/FT	12.0"	12.0"	12.0"	12.0"	12.0"	8.9"	12.0"	12.0"	12.0"	12.0"	12.0"	12.0"	11.0"	9.1"	12.0"	12.0"	12.0"
	+/- 68.0 PSF	32.0 LB/FT	340.1 LB/FT	12.0"	12.0"	12.0"	12.0"	12.0"	7.1"	12.0"	12.0"	10.2"	12.0"	12.0"	12.0"	8.8"	7.4"	12.0"	12.0"	12.0"
	+/- 76.0 PSF	114.8 LB/FT	380.1 LB/FT	11.3"	12.0"	12.0"	12.0"	12.0"	5.8"	12.0"	12.0"	7.7"	9.6"	8.9"	8.8"	7.3"	6.4"	12.0"	12.0"	12.0"
	+/- 93.0 PSF	291.3 LB/FT	465.1 LB/FT	7.3"	8.2"	12.0"	12.0"	11.1"	4.2"	8.6"	8.8"	5.0"	5.0"	4.5"	4.9"	5.4"	4.9"	12.0"	12.0"	12.0"
84"	+/- 37.5 PSF	0.0 LB/FT	218.8 LB/FT	12.0"	12.0"	12.0"	12.0"	12.0"	11.5"	12.0"	12.0"	12.0"	12.0"	12.0"	12.0"	12.0"	11.8"	12.0"	12.0"	12.0"
	+/- 42.1 PSF	55.2 LB/FT	245.6 LB/FT	12.0"	12.0"	12.0"	12.0"	12.0"	9.2"	12.0"	12.0"	12.0"	12.0"	12.0"	12.0"	11.6"	10.0"	12.0"	12.0"	12.0"
	+/- 46.0 PSF	106.0 LB/FT	268.4 LB/FT	12.0"	12.0"	12.0"	12.0"	12.0"	7.9"	12.0"	12.0"	10.1"	11.7"	10.8"	11.0"	10.1"	8.9"	12.0"	12.0"	12.0"
	+/- 50.0 PSF	158.0 LB/FT	291.7 LB/FT	12.0"	12.0"	12.0"	12.0"	12.0"	6.9"	12.0"	12.0"	8.4"	8.9"	8.0"	8.5"	8.9"	8.0"	12.0"	12.0"	12.0"
	+/- 56.4 PSF	241.3 LB/FT	329.1 LB/FT	9.7"	10.8"	12.0"	12.0"	12.0"	5.7"	11.6"	11.6"	6.7"	6.4"	5.7"	6.3"	7.4"	6.8"	12.0"	12.0"	12.0"
	+/- 68.0 PSF	392.0 LB/FT	396.7 LB/FT	7.0"	7.7"	12.0"	12.0"	10.4"	4.3"	8.6"	8.4"	4.8"	4.2"	3.7"	4.2"	5.7"	5.4"	12.0"	12.0"	12.0"
	+/- 76.0 PSF	495.9 LB/FT	443.4 LB/FT	5.9"	6.4"	10.8"	10.5"	8.7"		7.3"	7.1"	4.0"	3.4"	3.0"	3.5"	5.0"	4.8"	12.0"	12.0"	12.0"
	+/- 93.0 PSF	716.4 LB/FT	542.6 LB/FT	4.4"	4.8"	8.1"	7.8"	6.4"	2.9"	5.5"	5.3"	3.0"	2.5"	2.1"	2.5"	3.9"	3.8"	12.0"	12.0"	12.0"
96"	+/- 37.5 PSF	219.0 LB/FT	250.1 LB/FT	11.8"	12.0"	12.0"	12.0"	12.0"	7.2"	12.0"	12.0"	8.1"	7.4"	6.5"	7.3"	9.4"	8.8"	12.0"	12.0"	12.0"
	+/- 42.1 PSF	292.1 LB/FT	280.7 LB/FT	9.6"	10.6"	12.0"	12.0"	12.0"	6.0"	11.9"	11.6"	6.6"	5.7"	5.1"	5.8"	8.0"	7.6"	12.0"	12.0"	12.0"
	+/- 46.0 PSF	354.0 LB/FT	306.7 LB/FT	8.3"	9.2"	12.0"	12.0"	12.0"	5.3"	10.4"	10.1"	5.8"	4.8"	4.3"	4.9"	7.1"	6.9"	12.0"	12.0"	12.0"
	+/- 50.0 PSF	417.4 LB/FT	333.4 LB/FT	7.3"	8.0"	12.0"	12.0"	10.8"	4.8"	9.2"	8.9"	5.1"	4.2"	3.7"	4.2"	6.4"	6.2"	12.0"	12.0"	12.0"
	+/- 56.4 PSF	518.8 LB/FT	376.1 LB/FT	6.1"	6.7"	11.3"	11.0"	9.1"	4.1"	7.8"	7.5"	4.2"	3.4"	3.0"	3.5"	5.5"	5.4"	12.0"	12.0"	12.0"
	+/- 68.0 PSF	702.2 LB/FT	453.4 LB/FT	4.7"	5.2"	8.8"	8.6"	7.0"		6.1"	5.8"	3.3"	2.6"	2.2"	2.6"	4.4"	4.4"	12.0"	12.0"	12.0"
	+/- 76.0 PSF	828.4 LB/FT	506.8 LB/FT	4.1"	4.5"	7.6"	7.4"	6.0"		5.3"	5.0"		2.2"		2.3"	3.8"	3.9"	12.0"	12.0"	12.0"
108"	+/- 37.5 PSF	413.5 LB/FT	281.3 LB/FT	7.9"	8.6"	12.0"	12.0"	11.6"	5.3"	10.1"	9.6"	5.5"	4.3"	3.8"	4.4"	7.2"	7.1"	12.0"	12.0"	12.0"
	+/- 42.1 PSF	500.6 LB/FT	315.8 LB/FT	6.7"	7.3"	12.0"	12.0"	9.9"	4.6"	8.7"	8.2"	4.7"	3.6"	3.2"	3.7"	6.2"	6.2"	12.0"	12.0"	12.0"
	+/- 46.0 PSF	574.3 LB/FT	345.1 LB/FT	5.9"	6.5"	11.0"	10.8"	8.7"	4.1"	7.7"	7.3"	4.1"	3.2"	2.8"	3.3"	5.6"	5.6"	12.0"	12.0"	12.0"
	+/- 50.0 PSF	649.9 LB/FT	375.1 LB/FT	5.3"	5.8"	9.9"	9.7"	7.8"		6.9"	6.5"	3.7"	2.8"	2.5"	2.9"	5.1"	5.1"	12.0"	12.0"	12.0"
	+/- 56.4 PSF	770.6 LB/FT	423.1 LB/FT	4.6"	5.0"	8.5"	8.3"	6.7"		6.0"	5.6"	3.2"	2.4"	2.1"	2.5"	4.4"	4.5"	12.0"	12.0"	12.0"
	+/- 68.0 PSF	988.9 LB/FT	510.1 LB/FT		4.0"	6.8"	6.6"	5.3"			4.5"					3.6"	3.7"	12.0"	12.0"	12.0"
120"	+/- 37.5 PSF	591.7 LB/FT	312.6 LB/FT	6.0"	6.6"	11.2"	11.0"	8.8"	4.3"	7.9"	7.4"	4.2"	3.1"	2.7"	3.2"	5.9"	6.0"	12.0"	12.0"	12.0"
	+/- 42.1 PSF	693.4 LB/FT	350.9 LB/FT	5.2"	5.7"	9.7"	9.5"	7.6"		6.9"	6.4"	3.6"	2.7"	2.3"	2.8"	5.1"	5.3"	12.0"	12.0"	12.0"
	+/- 46.0 PSF	779.5 LB/FT	383.4 LB/FT	4.7"	5.1"	8.7"	8.6"	6.9"		6.2"	5.8"	3.3"	2.4"	2.1"	2.5"	4.6"	4.8"	12.0"	12.0"	12.0"
	+/- 50.0 PSF	867.8 LB/FT	416.8 LB/FT	4.2"	4.6"	7.9"	7.8"	6.2"		5.6"	5.2"	3.0"	2.2"		2.2"	4.2"	4.4"	12.0"	12.0"	12.0"
	+/- 56.4 PSF	1008.7 LB/FT	470.1 LB/FT		4.0"	6.9"	6.7"	5.4"			4.5"					3.7"	3.9"	12.0"	12.0"	12.0"
132"	+/- 37.5 PSF	761.4 LB/FT	343.8 LB/FT	4.9"	5.4"	9.2"	9.0"	7.2"		6.6"	6.1"	3.4"	2.5"	2.2"	2.6"	5.0"	5.2"	12.0"	12.0"	12.0"
	+/- 42.1 PSF	878.6 LB/FT	386.0 LB/FT	4.3"	4.7"	8.0"	7.9"	6.3"		5.7"	5.3"	3.0"	2.2"		2.2"	4.4"	4.6"	12.0"	12.0"	12.0"
	+/- 46.0 PSF	977.7 LB/FT	421.8 LB/FT	3.9"	4.2"	7.3"	7.1"	5.7"		5.2"	4.8"				2.0"	4.0"	4.2"	12.0"	12.0"	12.0"
146.5"	+/- 37.5 PSF	961.3 LB/FT	381.6 LB/FT	4.0"	4.4"	7.6"	7.4"	5.9"		5.5"	5.0"				2.1"	4.2"	4.5"	12.0"	12.0"	12.0"
	+/- 42.1 PSF	1098.1 LB/FT	428.4 LB/FT		3.9"	6.7"	6.5"	5.2"			4.4"					3.7"	4.0"	12.0"	12.0"	12.0"
	+/- 46.0 PSF	1213.8 LB/FT	468.1 LB/FT		3.5"	6.0"	5.9"	4.7"			4.0"					3.4"	3.7"	11.9"	12.0"	12.0"

ANCHOR NOTES: SEE SHEET 4 FOR ANCHOR NOTES.

FRANK L. BENNARDO, P.E.
#PE96064
STATE OF TEXAS
FRANK L. BENNARDO
PROFESSIONAL ENGINEER
07/17/2015

FRANK L. BENNARDO, P.E.
160 SW 12th AVENUE
DEERFIELD BEACH, FL 33441
Ph: (954) 354-0660 Fax: (954) 354-0445
POWERED BY THE INNOVATORS
ENGINEER EXPRESS®
EXPERIENCE MORE AT WWW.ENGEXP.COM

Town & Country INDUSTRIES
Wholesale Aluminum and Building Products
A Division of ABC Supply Co., Inc.
400 WEST MCNAB ROAD
FT. LAUDERDALE, FL 33309

REMARKS	DRWN	CHKD	DATE
INIT ISSUE	KL	FLB	04/25/14
REV (TDI)	RWN	TSB	06/04/14

THIS DOCUMENT IS THE PROPERTY OF FRANK L. BENNARDO, P.E. AND SHALL NOT BE REPRODUCED IN WHOLE OR IN PART WITHOUT PERMISSION OF FRANK L. BENNARDO, P.E. * ALTERATIONS, ADDITIONS, HIGHLIGHTING, OR OTHER MARKINGS TO THIS DOCUMENT ARE NOT PERMITTED AND INVALIDATE OUR CERTIFICATION.

COPYRIGHT FRANK L. BENNARDO P.E.

14-1627a

SCALE: -

PAGE DESCRIPTION:
-
-

ANCHOR SCHEDULE: END RETENTION INTERIOR MOUNT

MAY BE ANY ANGLE(S) OR TUBE(S) FROM DETAILS 3/4 AND 4/4

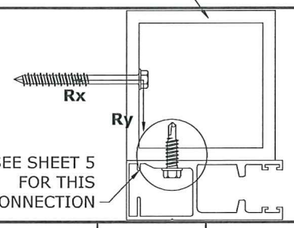

SEE SHEET 5 FOR THIS CONNECTION

MAXIMUM SPACING (O.C.)

SLAT SPAN	DESIGN PRESSURE	Rx	Ry	1/4" ELCO ULTRACON TO 2700 PSI MIN. CONCRETE; 1.75" MIN. EMBEDMENT; 2.5" MIN. EDGE DISTANCE	1/4" SS ITW TAPCON TO 3192 PSI MIN. CONCRETE; 1.75" MIN. EMBEDMENT; 2.5" MIN. EDGE DISTANCE	5/16" ELCO ULTRACON TO 3500 PSI MIN. CONCRETE; 2" MIN. EMBEDMENT; 3.125" MIN. EDGE DISTANCE	5/16" ITW TAPCON: TO 2899 PSI MIN. CONCRETE; 2.25" MIN. EMBEDMENT; 3.125" MIN. EDGE DISTANCE	5/16" ITW TAPCON: TO GROUT-FILLED CONCRETE BLOCK; 2.25" MIN. EMBEDMENT; 4" MIN. EDGE DISTANCE	5/16" ITW TAPCON: TO HOLLOW CONCRETE BLOCK; 1.75" MIN. EMBEDMENT; 4" MIN. EDGE DISTANCE	1/4" POWERS POWER-BOLT TO 3000 PSI MIN. CONCRETE; 2.5" MIN. EMBEDMENT; 3" MIN. EDGE DISTANCE	1/4" ALL-POINTS SOLID-SET: TO 3000 PSI MIN. CONCRETE; 0.875" MIN. EMBEDMENT; 3" MIN. EDGE DISTANCE	1/4" ALL-POINTS SOLID-SET: TO HOLLOW BLOCK; 0.875" MIN. EMBEDMENT; 3" MIN. EDGE DISTANCE	1/4" LAG SCREW TO G=0.55 MIN WOOD; 1.5" MIN. EMBEDMENT; 0.75" MIN. EDGE DISTANCE	5/16" LAG SCREW TO G=0.42 MIN WOOD; 2" MIN. EMBEDMENT; 0.75" MIN. EDGE DISTANCE	#14 WOOD SCREW TO G=0.55 MIN WOOD; 1.5" MIN. EMBEDMENT; 0.75" MIN. EDGE DISTANCE	#14 410 SS SMS W/ FULL THREAD PENETRATION OR 1/4-20 410 SS THRU-BOLT TO 0.125" MIN. 6063-T6 ALUM; 0.5" MIN. EDGE DISTANCE	5/16" 410 SS SMS W/ FULL THREAD PENETRATION OR 5/16-18 410 SS THRU-BOLT TO 0.25" MIN. 6063-T6 ALUM; 0.625" MIN. EDGE DISTANCE	3/8" POWERS WEDGE BOLT TO 3000 PSI MIN. CONCRETE; 3.5" MIN. EMBEDMENT; 4.5" MIN. EDGE DISTANCE	3/8" ELCO CONFLEX: TO 1819 PSI MIN. CONCRETE; 3.5" MIN. EMBEDMENT; 3.75" MIN. EDGE DISTANCE	3/8" ELCO CONFLEX: TO 4510 PSI MIN. CONCRETE; 3.5" MIN. EMBEDMENT; 3.75" MIN. EDGE DISTANCE
62"	+/- 37.5 PSF	64.6 LB/FT	96.9 LB/FT	8.0"	8.0"	8.0"	8.0"	8.0"	8.0"	8.0"	8.0"	8.0"	8.0"	8.0"	8.0"	8.0"	8.0"	8.0"	8.0"	8.0"
	+/- 42.1 PSF	72.5 LB/FT	108.8 LB/FT	8.0"	8.0"	8.0"	8.0"	8.0"	8.0"	8.0"	8.0"	8.0"	8.0"	8.0"	8.0"	8.0"	8.0"	8.0"	8.0"	8.0"
	+/- 46.0 PSF	79.3 LB/FT	118.8 LB/FT	8.0"	8.0"	8.0"	8.0"	8.0"	8.0"	8.0"	8.0"	8.0"	8.0"	8.0"	8.0"	8.0"	8.0"	8.0"	8.0"	8.0"
	+/- 50.0 PSF	86.2 LB/FT	129.2 LB/FT	8.0"	8.0"	8.0"	8.0"	8.0"	8.0"	8.0"	8.0"	8.0"	8.0"	8.0"	8.0"	8.0"	8.0"	8.0"	8.0"	8.0"
	+/- 56.4 PSF	97.2 LB/FT	145.7 LB/FT	8.0"	8.0"	8.0"	8.0"	8.0"	8.0"	8.0"	8.0"	8.0"	8.0"	8.0"	8.0"	8.0"	8.0"	8.0"	8.0"	8.0"
	+/- 68.0 PSF	117.2 LB/FT	175.7 LB/FT	8.0"	8.0"	8.0"	8.0"	8.0"	8.0"	8.0"	8.0"	8.0"	8.0"	8.0"	8.0"	8.0"	8.0"	8.0"	8.0"	8.0"
	+/- 76.0 PSF	131.0 LB/FT	196.3 LB/FT	8.0"	8.0"	8.0"	8.0"	8.0"	8.0"	8.0"	8.0"	8.0"	8.0"	8.0"	8.0"	8.0"	8.0"	8.0"	8.0"	8.0"
	+/- 93.0 PSF	160.2 LB/FT	240.3 LB/FT	8.0"	8.0"	8.0"	8.0"	8.0"	8.0"	8.0"	8.0"	8.0"	7.5"	6.5"	7.6"	8.0"	8.0"	8.0"	8.0"	8.0"
72"	+/- 37.5 PSF	75.0 LB/FT	112.5 LB/FT	8.0"	8.0"	8.0"	8.0"	8.0"	8.0"	8.0"	8.0"	8.0"	8.0"	8.0"	8.0"	8.0"	8.0"	8.0"	8.0"	8.0"
	+/- 42.1 PSF	84.2 LB/FT	126.3 LB/FT	8.0"	8.0"	8.0"	8.0"	8.0"	8.0"	8.0"	8.0"	8.0"	8.0"	8.0"	8.0"	8.0"	8.0"	8.0"	8.0"	8.0"
	+/- 46.0 PSF	92.0 LB/FT	138.0 LB/FT	8.0"	8.0"	8.0"	8.0"	8.0"	8.0"	8.0"	8.0"	8.0"	8.0"	8.0"	8.0"	8.0"	8.0"	8.0"	8.0"	8.0"
	+/- 50.0 PSF	100.1 LB/FT	150.0 LB/FT	8.0"	8.0"	8.0"	8.0"	8.0"	8.0"	8.0"	8.0"	8.0"	8.0"	8.0"	8.0"	8.0"	8.0"	8.0"	8.0"	8.0"
	+/- 56.4 PSF	112.9 LB/FT	169.2 LB/FT	8.0"	8.0"	8.0"	8.0"	8.0"	8.0"	8.0"	8.0"	8.0"	8.0"	8.0"	8.0"	8.0"	8.0"	8.0"	8.0"	8.0"
	+/- 68.0 PSF	168.1 LB/FT	204.0 LB/FT	8.0"	8.0"	8.0"	8.0"	8.0"	8.0"	8.0"	8.0"	8.0"	8.0"	7.4"	8.0"	8.0"	8.0"	8.0"	8.0"	8.0"
	+/- 76.0 PSF	266.8 LB/FT	228.0 LB/FT	8.0"	8.0"	8.0"	8.0"	8.0"	6.7"	8.0"	8.0"	7.7"	7.0"	6.2"	7.0"	8.0"	8.0"	8.0"	8.0"	8.0"
	+/- 93.0 PSF	477.4 LB/FT	279.0 LB/FT	7.4"	8.0"	8.0"	8.0"	8.0"	4.1"	8.0"	8.0"	5.0"	5.1"	4.6"	5.0"	5.3"	4.8"	8.0"	8.0"	8.0"
84"	+/- 37.5 PSF	87.5 LB/FT	131.3 LB/FT	8.0"	8.0"	8.0"	8.0"	8.0"	8.0"	8.0"	8.0"	8.0"	8.0"	8.0"	8.0"	8.0"	8.0"	8.0"	8.0"	8.0"
	+/- 42.1 PSF	153.5 LB/FT	147.4 LB/FT	8.0"	8.0"	8.0"	8.0"	8.0"	8.0"	8.0"	8.0"	8.0"	8.0"	8.0"	8.0"	8.0"	8.0"	8.0"	8.0"	8.0"
	+/- 46.0 PSF	213.4 LB/FT	161.0 LB/FT	8.0"	8.0"	8.0"	8.0"	8.0"	8.0"	8.0"	8.0"	8.0"	8.0"	8.0"	8.0"	8.0"	8.0"	8.0"	8.0"	8.0"
	+/- 50.0 PSF	274.8 LB/FT	175.0 LB/FT	8.0"	8.0"	8.0"	8.0"	8.0"	7.1"	8.0"	8.0"	8.0"	8.0"	7.6"	8.0"	8.0"	8.0"	8.0"	8.0"	8.0"
	+/- 56.4 PSF	372.9 LB/FT	197.4 LB/FT	8.0"	8.0"	8.0"	8.0"	8.0"	5.4"	8.0"	8.0"	6.7"	7.0"	6.4"	6.8"	6.9"	6.3"	8.0"	8.0"	8.0"
	+/- 68.0 PSF	550.8 LB/FT	238.0 LB/FT	7.1"	7.9"	8.0"	8.0"	8.0"		8.0"	8.0"	4.8"	5.4"	5.0"	5.1"	4.8"	4.3"	8.0"	8.0"	8.0"
	+/- 76.0 PSF	673.3 LB/FT	266.0 LB/FT	6.0"	6.7"	8.0"	8.0"	8.0"		6.7"	7.0"	4.0"	4.7"	4.3"	4.4"	4.0"	3.5"	8.0"	8.0"	8.0"
	+/- 93.0 PSF	933.5 LB/FT	325.5 LB/FT	4.4"	5.0"	8.0"	7.7"	6.8"		5.0"	5.2"	3.0"	3.6"	3.3"	3.4"	2.9"	2.6"	8.0"	8.0"	8.0"
96"	+/- 37.5 PSF	319.1 LB/FT	150.0 LB/FT	8.0"	8.0"	8.0"	8.0"	8.0"	6.5"	8.0"	8.0"	8.0"	8.0"	8.0"	8.0"	8.0"	7.4"	8.0"	8.0"	8.0"
	+/- 42.1 PSF	404.4 LB/FT	168.4 LB/FT	8.0"	8.0"	8.0"	8.0"	8.0"	5.2"	8.0"	8.0"	6.6"	7.5"	6.9"	7.1"	6.6"	5.9"	8.0"	8.0"	8.0"
	+/- 46.0 PSF	476.7 LB/FT	184.0 LB/FT	8.0"	8.0"	8.0"	8.0"	8.0"	4.5"	8.0"	8.0"	5.7"	6.7"	6.2"	6.3"	5.7"	5.0"	8.0"	8.0"	8.0"
	+/- 50.0 PSF	550.8 LB/FT	200.0 LB/FT	7.5"	8.0"	8.0"	8.0"	8.0"		8.0"	8.0"	5.1"	6.0"	5.5"	5.6"	5.0"	4.4"	8.0"	8.0"	8.0"
	+/- 56.4 PSF	669.3 LB/FT	225.6 LB/FT	6.3"	7.1"	8.0"	8.0"	8.0"		7.0"	7.4"	4.2"	5.1"	4.8"	4.8"	4.1"	3.6"	8.0"	8.0"	8.0"
	+/- 68.0 PSF	883.6 LB/FT	272.0 LB/FT	4.9"	5.5"	8.0"	8.0"	7.5"		5.4"	5.7"	3.3"	4.1"	3.8"	3.8"	3.1"	2.7"	8.0"	8.0"	8.0"
	+/- 76.0 PSF	1031.1 LB/FT	304.0 LB/FT	4.2"	4.7"	7.6"	7.2"	6.5"			4.9"		3.6"	3.3"	3.3"	2.7"	2.4"	8.0"	8.0"	8.0"
108"	+/- 37.5 PSF	526.0 LB/FT	168.8 LB/FT	8.0"	8.0"	8.0"	8.0"	8.0"	4.2"	8.0"	8.0"	5.5"	6.7"	6.2"	6.2"	5.3"	4.6"	8.0"	8.0"	8.0"
	+/- 42.1 PSF	626.9 LB/FT	189.5 LB/FT	6.9"	7.8"	8.0"	8.0"	8.0"		7.6"	8.0"	4.7"	5.8"	5.4"	5.4"	4.4"	3.9"	8.0"	8.0"	8.0"
	+/- 46.0 PSF	712.4 LB/FT	207.0 LB/FT	6.1"	6.9"	8.0"	8.0"	8.0"		6.8"	7.2"	4.1"	5.2"	4.9"	4.8"	3.9"	3.4"	8.0"	8.0"	8.0"
	+/- 50.0 PSF	799.9 LB/FT	225.0 LB/FT	5.5"	6.2"	8.0"	8.0"	8.0"		6.1"	6.4"	3.7"	4.7"	4.4"	4.3"	3.5"	3.1"	8.0"	8.0"	8.0"
	+/- 56.4 PSF	939.9 LB/FT	253.8 LB/FT	4.7"	5.3"	8.0"	8.0"	7.3"		5.2"	5.5"	3.2"	4.1"	3.8"	3.7"	3.0"	2.6"	8.0"	8.0"	8.0"
	+/- 68.0 PSF	1193.0 LB/FT	306.0 LB/FT		4.2"	6.7"	6.4"	5.8"			4.4"		3.3"	3.1"	3.0"	2.4"	2.1"	8.0"	8.0"	8.0"
120"	+/- 37.5 PSF	716.7 LB/FT	187.5 LB/FT	6.2"	7.0"	8.0"	8.0"	8.0"		6.8"	7.3"	4.2"	5.4"	5.1"	5.0"	3.9"	3.4"	8.0"	8.0"	8.0"
	+/- 42.1 PSF	833.8 LB/FT	210.5 LB/FT	5.4"	6.1"	8.0"	8.0"	8.0"		5.9"	6.3"	3.6"	4.8"	4.5"	4.3"	3.4"	2.9"	8.0"	8.0"	8.0"
	+/- 46.0 PSF	933.0 LB/FT	230.0 LB/FT	4.8"	5.5"	8.0"	8.0"	7.5"		5.3"	5.7"	3.3"	4.3"	4.1"	3.9"	3.0"	2.6"	8.0"	8.0"	8.0"
	+/- 50.0 PSF	1034.5 LB/FT	250.0 LB/FT	4.4"	5.0"	7.8"	7.5"	6.8"			5.1"	3.0"	3.9"	3.7"	3.6"	2.7"	2.4"	8.0"	8.0"	8.0"
	+/- 56.4 PSF	1196.8 LB/FT	282.0 LB/FT		4.3"	6.8"	6.5"	5.9"			4.4"		3.4"	3.2"	3.1"	2.4"	2.1"	8.0"	8.0"	8.0"
132"	+/- 37.5 PSF	899.0 LB/FT	206.3 LB/FT	5.1"	5.8"	8.0"	8.0"	7.9"		5.6"	5.9"	3.4"	4.6"	4.4"	4.2"	3.2"	2.7"	8.0"	8.0"	8.0"
	+/- 42.1 PSF	1033.0 LB/FT	231.6 LB/FT	4.5"	5.0"	8.0"	7.6"	6.9"			5.2"	3.0"	4.1"	3.9"	3.7"	2.8"	2.4"	8.0"	8.0"	8.0"
	+/- 46.0 PSF	1146.5 LB/FT	253.0 LB/FT	4.0"	4.6"	7.2"	6.8"	6.2"			4.7"		3.7"	3.5"	3.3"	2.5"	2.2"	8.0"	8.0"	8.0"
146.5"	+/- 37.5 PSF	1114.0 LB/FT	228.9 LB/FT	4.2"	4.8"	7.5"	7.1"	6.5"			4.9"		3.9"	3.7"	3.5"	2.6"	2.2"	8.0"	8.0"	8.0"
	+/- 42.1 PSF	1269.5 LB/FT	257.0 LB/FT		4.2"	6.6"	6.3"	5.7"			4.3"		3.4"	3.3"	3.1"	2.3"		8.0"	8.0"	8.0"
	+/- 46.0 PSF	1401.1 LB/FT	280.8 LB/FT			6.0"	5.7"	5.2"			3.9"		3.1"	3.0"	2.8"	2.1"		8.0"	8.0"	8.0"

ANCHOR NOTES: SEE SHEET 4 FOR ANCHOR NOTES.

FRANK L. BENNARDO, P.E.
#PE96064
07/17/2015
STATE OF TEXAS
FRANK L. BENNARDO
96064
LICENSED PROFESSIONAL ENGINEER

FRANK L. BENNARDO, P.E.
160 SW 12th AVENUE
DEERFIELD BEACH, FL 33442
PH: (954) 354-0660 FAX: (954) 354-0643
POWERED BY THE INNOVATIONS OF
ENGINEERING EXPRESS®
EXPERIENCE MORE AT WWW.ENGEXP.COM

Town & Country INDUSTRIES
Wholesale Aluminum and Building Products
A Division of AGC Supply Co., Inc.
400 WEST MCNAB ROAD
FT. LAUDERDALE, FL 33309

REMARKS	DRWN	CHKD	DATE
INIT ISSUE	KL	FLB	04/25/14
REV (TDI)	RWN	TSB	06/04/14
-	-	-	-
-	-	-	-
-	-	-	-

THIS DOCUMENT IS THE PROPERTY OF FRANK L. BENNARDO, P.E AND SHALL NOT BE REPRODUCED IN WHOLE OR IN PART WITHOUT PERMISSION OF FRANK L. BENNARDO, P.E. * ALTERATIONS, ADDITIONS, HIGHLIGHTING, OR OTHER MARKINGS TO THIS DOCUMENT ARE NOT PERMITTED AND INVALIDATE OUR CERTIFICATION.

COPYRIGHT FRANK L. BENNARDO P.E.

14-1627a

SCALE: -

PAGE DESCRIPTION:
-
-

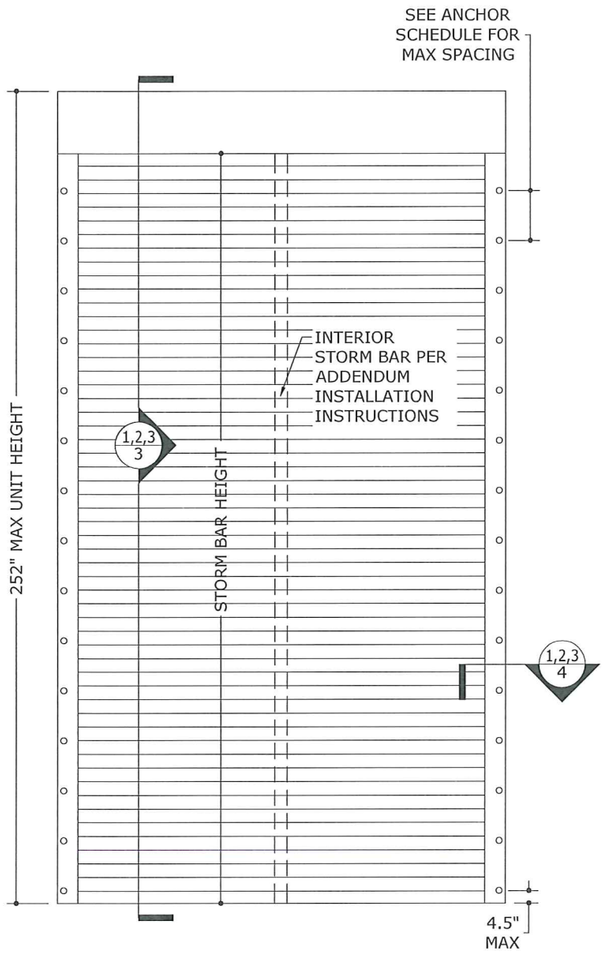

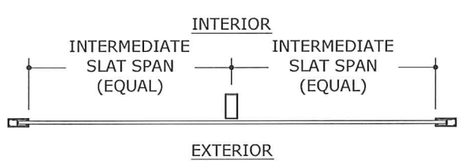

TABLE 3
MINIMUM GLAZING SEPARATION
END-RETENTION SHUTTER WITH INTERIOR STORM BARS
(ESSENTIAL FACILITIES ONLY)

INT. SLAT SPAN	SPAN TYPE	POSITIVE DESIGN PRESSURE	INSTALLATIONS ≤ 30' ABOVE GRADE	INSTALLATIONS > 30' ABOVE GRADE
48.5"	DOUBLE INT. SPAN	+ 30 PSF	4.5"	3.3"
		+ 40 PSF	4.5"	3.3"
		+ 50 PSF	4.5"	3.3"
		+ 60 PSF	4.5"	3.3"
		+ 70 PSF	4.5"	3.3"
55.0"	DOUBLE INT. SPAN	+ 30 PSF	4.5"	3.5"
		+ 40 PSF	4.5"	3.5"
		+ 50 PSF	4.5"	3.5"
		+ 60 PSF	4.5"	3.5"
		+ 70 PSF	4.5"	3.5"
36.7"	DOUBLE INT. SPAN	+ 30 PSF	4.5"	2.7"
		+ 40 PSF	4.5"	2.7"
		+ 50 PSF	4.5"	2.7"
		+ 60 PSF	4.5"	2.7"
		+ 70 PSF	4.5"	2.7"
44.0"	TRIPLE INT. SPAN	+ 30 PSF	4.5"	2.8"
		+ 40 PSF	4.5"	2.8"
		+ 50 PSF	4.5"	2.8"
		+ 60 PSF	4.5"	2.8"
		+ 70 PSF	4.5"	2.8"
48.7"	TRIPLE INT. SPAN	+ 30 PSF	4.5"	2.9"
		+ 40 PSF	4.5"	2.9"
		+ 50 PSF	4.5"	2.9"
		+ 60 PSF	4.5"	2.9"
		+ 70 PSF	4.5"	2.9"

TABLE 3 NOTES:

- SLAT SPAN IS DEFINED IN DETAILS 1/8 AND 2/8
- SEPARATION FROM GLAZING IS REQUIRED **ONLY** IN ESSENTIAL FACILITIES.
- LINEAR INTERPOLATION BETWEEN SHUTTER SPANS IS NOT PERMITTED. FOR SPANS BETWEEN THOSE INDICATED ABOVE, THE SEPARATION FROM GLASS FOR THE NEXT HIGHER SPAN SHALL BE USED.
- "INT." SHOW IS AN ABBREVIATION FOR "INTERMEDIATE".

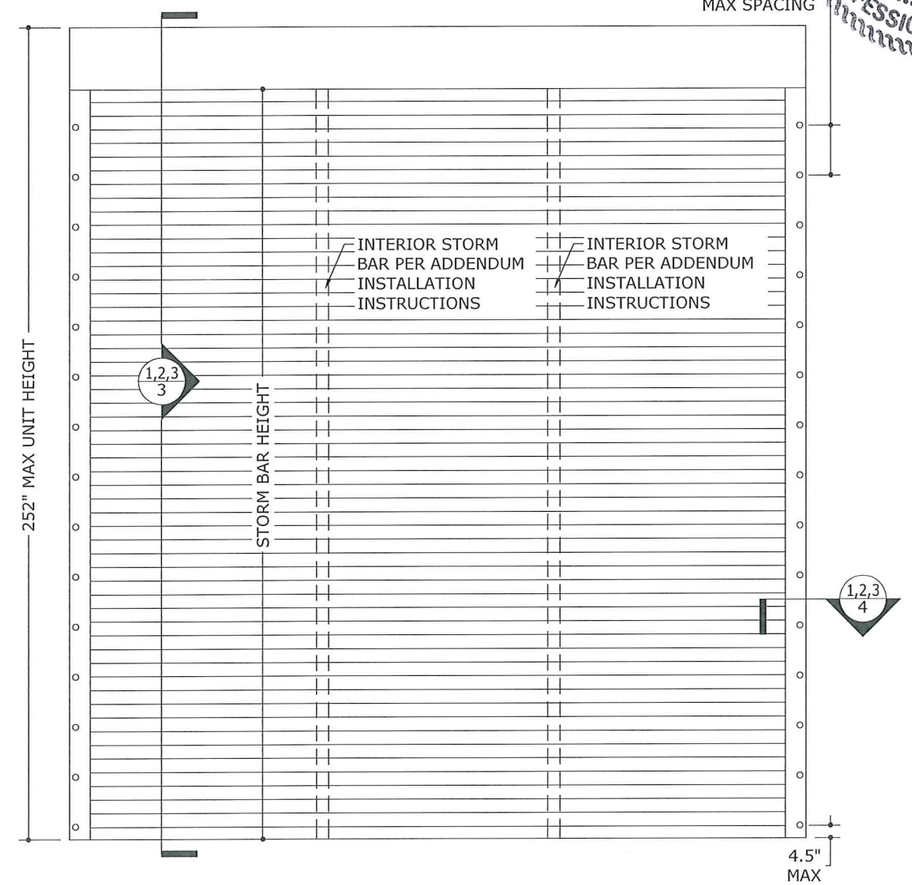

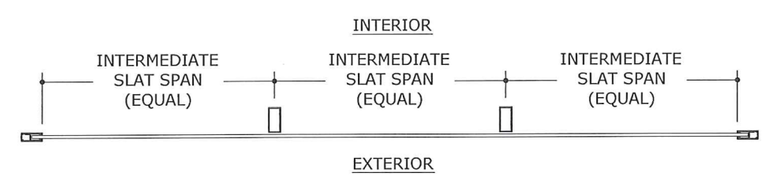

1/8 END RETENTION SHUTTER WITH INTERIOR STORM BARS (DOUBLE-SPAN)
N.T.S. EXTERIOR ELEV

2/8 END RETENTION SHUTTER WITH INTERIOR STORM BARS (TRIPLE-SPAN)
N.T.S. EXTERIOR ELEV

FRANK L. BENNARDO, P.E.
LIC. #96064
STATE OF TEXAS
FRANK L. BENNARDO
96064
LICENSED
PROFESSIONAL ENGINEER
07/17/2015
FRANK L. BENNARDO, P.E.
160 SW 12th AVENUE, #101
DEERFIELD BEACH, FL 33442
PH: (954) 354-0660 FAX: (954) 354-0443
POWERED BY THE INNOVATIONS OF
ENGINEERING EXPRESS®
EXPERIENCE MORE AT WWW.ENGEXP.COM

Town & Country INDUSTRIES
Wholesale Aluminum and Building Products
A Division of ABC Supply Co., Inc.
400 WEST MCNAB ROAD
FT. LAUDERDALE, FL 33309

REMARKS	DRWN	CHKD	DATE
INIT ISSUE	KL	FLB	04/25/14
REV (TDI)	RWN	TSB	06/04/14
-	-	-	-
-	-	-	-
-	-	-	-

THIS DOCUMENT IS THE PROPERTY OF FRANK L. BENNARDO, P.E AND SHALL NOT BE REPRODUCED IN WHOLE OR IN PART WITHOUT WRITTEN CONSENT OF FRANK L. BENNARDO, P.E. " ALTERATIONS, ADDITIONS, HIGHLIGHTING, OR OTHER MARKINGS TO THIS DOCUMENT ARE NOT PERMITTED AND INVALIDATE OUR CERTIFICATION.
COPYRIGHT FRANK L. BENNARDO P.E.

14-1627a

SCALE: -

PAGE DESCRIPTION:
-
-

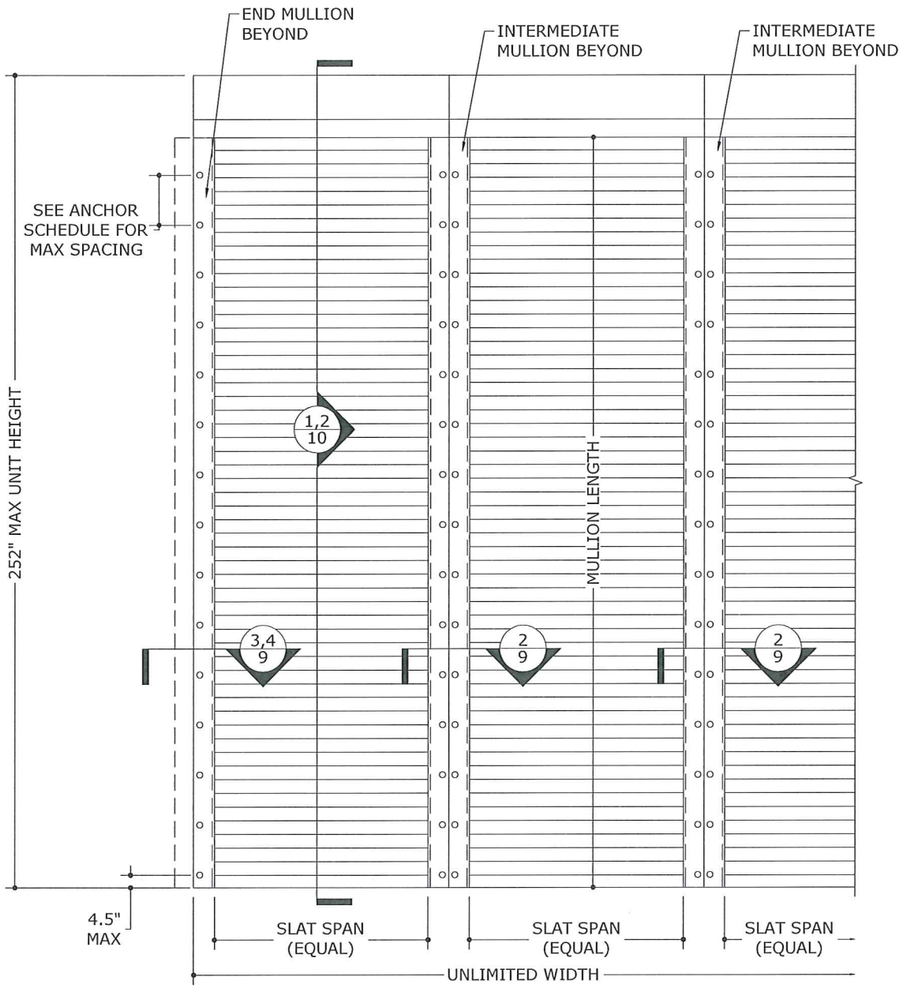

1/9 TYPICAL SHUTTER WITH MULLIONS

N.T.S. EXTERIOR ELEV

NOTE: MULLIONS PER MULLION SCHEDULES.

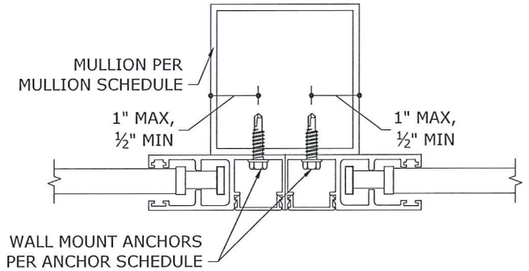

2/9 WALL MOUNT TO INTERMEDIATE MULLION

N.T.S. HORIZ SECTION

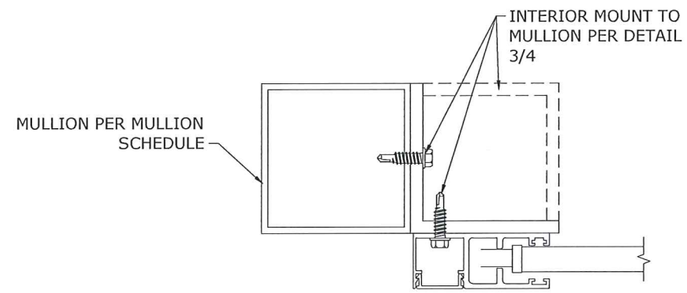

3/9 INTERIOR MOUNT TO END MULLION

N.T.S. HORIZ SECTION

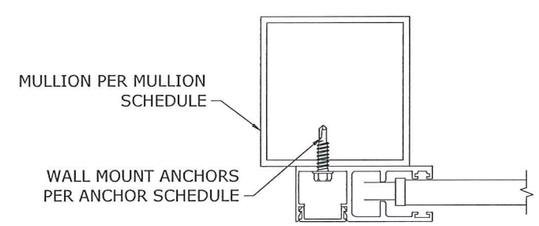

4/9 WALL MOUNT TO END MULLION

N.T.S. HORIZ SECTION

FRANK L. BENNARDO, P.E.
07/17/2015
STATE OF TEXAS
FRANK L. BENNARDO
96064
LICENSED
PROFESSIONAL ENGINEER
FRANK L. BENNARDO, P.E.
160 SW 12th AVENUE
DEERFIELD BEACH, FL 33442
PH: (954) 354-0660 FAX: (954) 354-0441
POWERED BY THE INNOVATORS
ENGINEER EXPRESS®
EXPERIENCE MORE AT WWW.ENGEXP.COM

Town & Country INDUSTRIES
Wholesale Aluminum and Building Products
A Division of ABC Supply Co., Inc.
400 WEST MCNAB ROAD
FT. LAUDERDALE, FL 33309

REMARKS	DRWN	CHKD	DATE
INIT ISSUE	KL	FLB	04/25/14
REV (TDI)	RWN	TSB	06/04/14
-	-	-	-
-	-	-	-
-	-	-	-

THIS DOCUMENT IS THE PROPERTY OF FRANK L. BENNARDO, P.E AND SHALL NOT BE REPRODUCED IN WHOLE OR IN PART WITHOUT WRITTEN CONSENT OF FRANK L. BENNARDO, P.E. * ALTERATIONS, ADDITIONS, HIGHLIGHTING, OR OTHER MARKINGS TO THIS DOCUMENT ARE NOT PERMITTED AND INVALIDATE OUR CERTIFICATION.

COPYRIGHT FRANK L. BENNARDO P.E.

14-1627a

SCALE: -

PAGE DESCRIPTION:
-
-

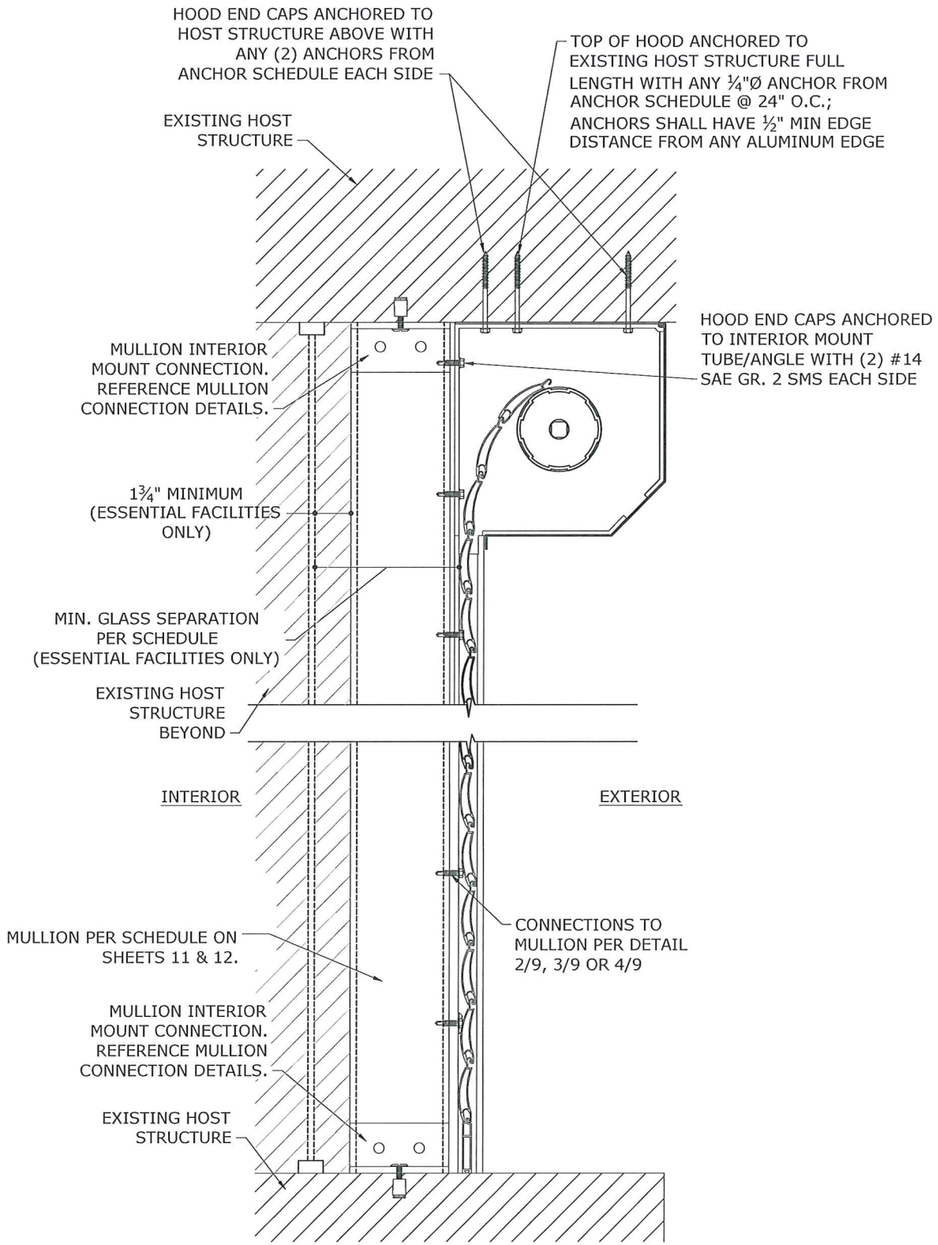

1/10 MULLION INTERIOR MOUNT

N.T.S. VERT SECTION

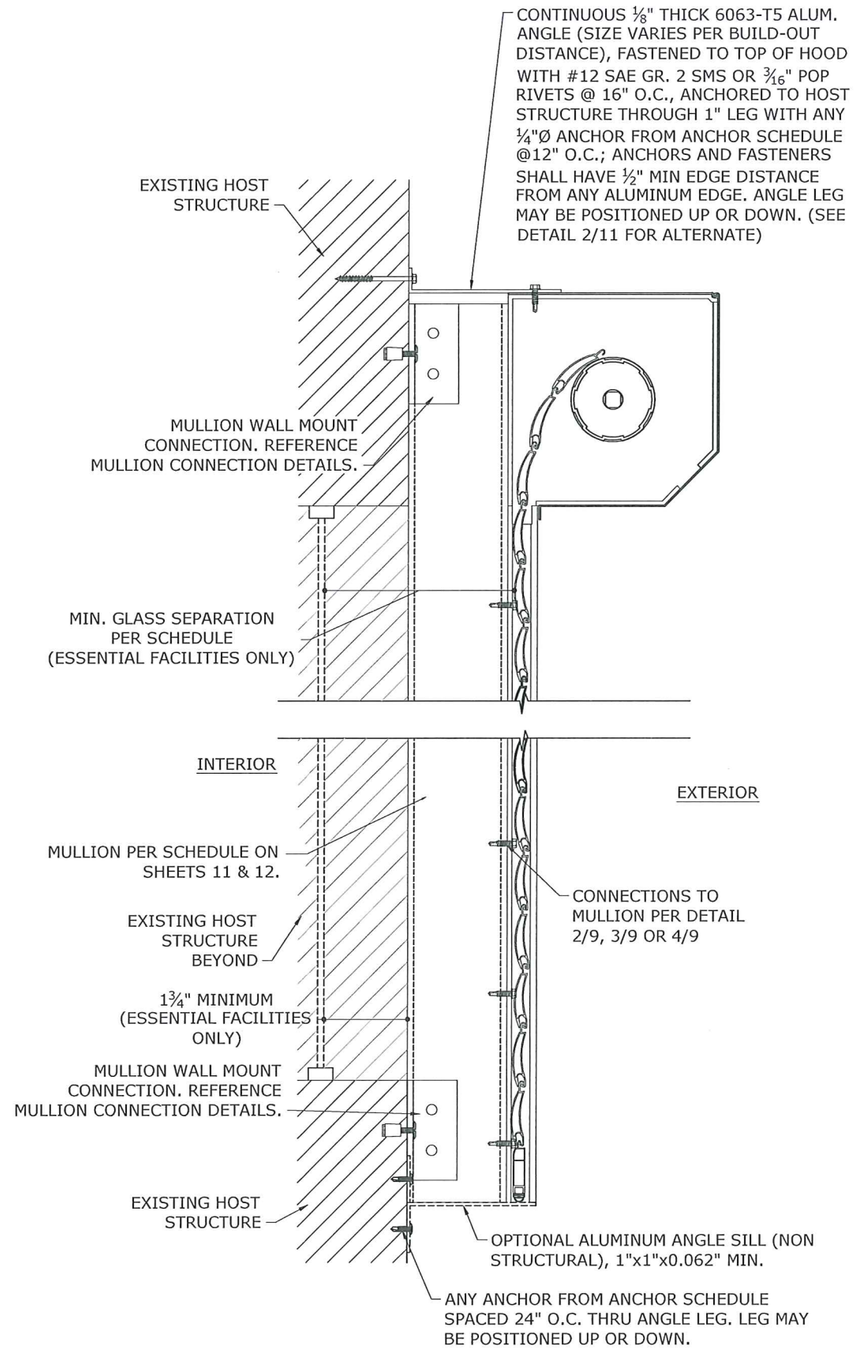

2/10 MULLION WALL MOUNT

N.T.S. VERT SECTION

FRANK L. BENNARDO, P.E.
PE96064
07/17/2015
FRANK L. BENNARDO
PROFESSIONAL ENGINEER
LICENSE NO. 96064
STATE OF FLORIDA

FRANK L. BENNARDO, P.E.
160 SW 12th AVENUE, SUITE 210
DEERFIELD BEACH, FL 33442
PH: (954) 354-0660 FAX: (954) 354-0443
POWERED BY THE INNOVATION OF ENGINEERING
ENGINEERING EXPRESS®
EXPERIENCE MORE AT WWW.ENGEXP.COM

Town & Country INDUSTRIES
Wholesale Aluminum and Building Products
A Division of ABC Supply Co., Inc.
400 WEST MCNAB ROAD
FT. LAUDERDALE, FL 33309

REMARKS	DRWN	CHKD	DATE
INIT ISSUE	KL	FLB	04/25/14
REV (TDI)	RWN	TSB	06/04/14
-	-	-	-
-	-	-	-
-	-	-	-

THE DOCUMENT IS THE PROPERTY OF FRANK L. BENNARDO, P.E. AND SHALL NOT BE REPRODUCED IN WHOLE OR IN PART WITHOUT WRITTEN CONSENT OF FRANK L. BENNARDO, P.E. ** ALTERATIONS, ADDITIONS, HIGHLIGHTING, OR OTHER MARKINGS TO THIS DOCUMENT ARE NOT PERMITTED AND INVALIDATE OUR CERTIFICATION.
COPYRIGHT FRANK L. BENNARDO P.E.

14-1627a

SCALE: -

PAGE DESCRIPTION:
-
-

END RETENTION MULLION SCHEDULE: INTERMEDIATE MULLIONS

SLAT SPAN	DESIGN PRESSURE	3"x3"x0.125" MAX MULLION LENGTH	3"x3"x0.125" END REACTION Rt	3"x3"x0.125" W/ 2.75"x2.75"x1/8" STEEL REINF.* MAX MULLION LENGTH	3"x3"x0.125" W/ 2.75"x2.75"x1/8" STEEL REINF.* END REACTION Rt	3"x3"x0.25" MAX MULLION LENGTH	3"x3"x0.25" END REACTION Rt	4"x4"x0.125" MAX MULLION LENGTH	4"x4"x0.125" END REACTION Rt	4"x4"x0.125" W/ 3.75"x3.75"x1/8" STEEL REINF.* MAX MULLION LENGTH	4"x4"x0.125" W/ 3.75"x3.75"x1/8" STEEL REINF.* END REACTION Rt	4"x4"x0.25" MAX MULLION LENGTH	4"x4"x0.25" END REACTION Rt	4"x6"x0.25" MAX MULLION LENGTH	4"x6"x0.25" END REACTION Rt	4"x8"x0.25" MAX MULLION LENGTH	4"x8"x0.25" END REACTION Rt
62"	+/- 38 PSF	102.4"	826.6 LB	113.4"	915.2 LB	120.0"	968.8 LB	120.0"	968.8 LB	120.0"	968.8 LB	120.0"	968.8 LB	120.0"	968.8 LB	120.0"	968.8 LB
	+/- 42 PSF	98.5"	892.8 LB	109.1"	988.6 LB	118.2"	1071.0 LB	120.0"	1087.6 LB	120.0"	1087.6 LB	120.0"	1087.6 LB	120.0"	1087.6 LB	120.0"	1087.6 LB
	+/- 46 PSF	95.6"	947.2 LB	105.9"	1048.7 LB	114.7"	1136.2 LB	120.0"	1188.3 LB	120.0"	1188.3 LB	120.0"	1188.3 LB	120.0"	1188.3 LB	120.0"	1188.3 LB
	+/- 50 PSF	93.0"	1001.3 LB	103.0"	1108.6 LB	111.6"	1201.1 LB	120.0"	1291.7 LB	120.0"	1291.7 LB	120.0"	1291.7 LB	120.0"	1291.7 LB	120.0"	1291.7 LB
	+/- 56 PSF	89.4"	1085.0 LB	98.9"	1201.3 LB	107.2"	1301.6 LB	115.3"	1399.7 LB	120.0"	1457.0 LB	120.0"	1457.0 LB	120.0"	1457.0 LB	120.0"	1457.0 LB
	+/- 68 PSF	84.0"	1229.1 LB	93.0"	1360.9 LB	100.7"	1474.4 LB	108.3"	1585.6 LB	120.0"	1756.7 LB	120.0"	1756.7 LB	120.0"	1756.7 LB	120.0"	1756.7 LB
	+/- 76 PSF	80.9"	1323.7 LB	89.6"	1465.6 LB	97.1"	1587.9 LB	104.4"	1707.6 LB	120.0"	1963.3 LB	120.0"	1963.3 LB	120.0"	1963.3 LB	120.0"	1963.3 LB
	+/- 93 PSF	75.6"	1514.4 LB	83.8"	1676.7 LB	90.7"	1816.6 LB	97.6"	1953.6 LB	113.0"	2262.6 LB	117.4"	2351.0 LB	120.0"	2402.5 LB	120.0"	2402.5 LB
72"	+/- 42 PSF	93.7"	986.4 LB	103.8"	1092.2 LB	112.4"	1183.3 LB	120.0"	1263.0 LB	120.0"	1263.0 LB	120.0"	1263.0 LB	120.0"	1263.0 LB	120.0"	1263.0 LB
	+/- 46 PSF	91.0"	1046.4 LB	100.8"	1158.6 LB	109.2"	1255.3 LB	117.4"	1349.9 LB	120.0"	1380.0 LB	120.0"	1380.0 LB	120.0"	1380.0 LB	120.0"	1380.0 LB
	+/- 50 PSF	88.5"	1106.3 LB	98.0"	1224.9 LB	106.2"	1327.0 LB	114.2"	1427.1 LB	120.0"	1500.0 LB	120.0"	1500.0 LB	120.0"	1500.0 LB	120.0"	1500.0 LB
	+/- 56 PSF	85.0"	1198.8 LB	94.1"	1327.3 LB	102.0"	1438.0 LB	109.7"	1546.4 LB	120.0"	1692.0 LB	120.0"	1692.0 LB	120.0"	1692.0 LB	120.0"	1692.0 LB
	+/- 68 PSF	79.9"	1358.0 LB	88.4"	1503.5 LB	95.8"	1629.0 LB	103.0"	1751.8 LB	119.3"	2028.9 LB	120.0"	2040.0 LB	120.0"	2040.0 LB	120.0"	2040.0 LB
	+/- 76 PSF	77.0"	1462.5 LB	85.2"	1619.3 LB	92.3"	1754.3 LB	99.3"	1886.6 LB	115.0"	2185.1 LB	119.5"	2270.4 LB	120.0"	2280.0 LB	120.0"	2280.0 LB
84"	+/- 38 PSF	92.5"	1012.0 LB	102.4"	1120.5 LB	111.0"	1214.0 LB	119.4"	1305.6 LB	120.0"	1312.5 LB	120.0"	1312.5 LB	120.0"	1312.5 LB	120.0"	1312.5 LB
	+/- 42 PSF	89.0"	1093.2 LB	98.6"	1210.4 LB	106.8"	1311.4 LB	114.8"	1410.3 LB	120.0"	1473.5 LB	120.0"	1473.5 LB	120.0"	1473.5 LB	120.0"	1473.5 LB
	+/- 46 PSF	86.4"	1159.7 LB	95.7"	1284.0 LB	103.7"	1391.1 LB	111.5"	1496.1 LB	120.0"	1610.0 LB	120.0"	1610.0 LB	120.0"	1610.0 LB	120.0"	1610.0 LB
	+/- 50 PSF	84.1"	1226.0 LB	93.1"	1357.4 LB	100.8"	1470.7 LB	108.5"	1581.6 LB	120.0"	1750.0 LB	120.0"	1750.0 LB	120.0"	1750.0 LB	120.0"	1750.0 LB
	+/- 56 PSF	80.8"	1328.5 LB	89.4"	1470.9 LB	96.9"	1593.6 LB	104.2"	1713.8 LB	120.0"	1974.0 LB	120.0"	1974.0 LB	120.0"	1974.0 LB	120.0"	1974.0 LB
	+/- 68 PSF	75.9"	1504.9 LB	84.0"	1666.3 LB	91.0"	1805.3 LB	97.9"	1941.4 LB	113.4"	2248.5 LB	117.8"	2336.3 LB	120.0"	2380.0 LB	120.0"	2380.0 LB
	+/- 76 PSF	73.1"	1620.8 LB	81.0"	1794.5 LB	87.7"	1944.2 LB	94.3"	2090.8 LB	109.2"	2421.6 LB	113.5"	2516.1 LB	120.0"	2660.0 LB	120.0"	2660.0 LB
96"	+/- 38 PSF	88.5"	1106.3 LB	98.0"	1224.9 LB	106.2"	1327.0 LB	114.2"	1427.1 LB	120.0"	1500.0 LB	120.0"	1500.0 LB	120.0"	1500.0 LB	120.0"	1500.0 LB
	+/- 42 PSF	85.2"	1195.0 LB	94.3"	1323.1 LB	102.1"	1433.5 LB	109.8"	1541.6 LB	120.0"	1684.0 LB	120.0"	1684.0 LB	120.0"	1684.0 LB	120.0"	1684.0 LB
	+/- 46 PSF	82.7"	1267.7 LB	91.5"	1403.6 LB	99.2"	1520.7 LB	106.7"	1635.3 LB	120.0"	1840.0 LB	120.0"	1840.0 LB	120.0"	1840.0 LB	120.0"	1840.0 LB
	+/- 50 PSF	80.4"	1340.1 LB	89.0"	1483.8 LB	96.5"	1607.6 LB	103.7"	1728.8 LB	120.0"	2000.0 LB	120.0"	2000.0 LB	120.0"	2000.0 LB	120.0"	2000.0 LB
	+/- 56 PSF	77.2"	1452.2 LB	85.5"	1607.9 LB	92.7"	1742.0 LB	99.6"	1873.4 LB	115.4"	2169.7 LB	119.9"	2254.4 LB	120.0"	2256.0 LB	120.0"	2256.0 LB
	+/- 68 PSF	72.6"	1645.0 LB	80.4"	1821.4 LB	87.1"	1973.3 LB	93.6"	2122.2 LB	108.4"	2457.8 LB	112.7"	2553.8 LB	120.0"	2720.0 LB	120.0"	2720.0 LB
108"	+/- 38 PSF	85.1"	1196.6 LB	94.2"	1324.9 LB	102.1"	1435.4 LB	109.8"	1543.7 LB	120.0"	1687.5 LB	120.0"	1687.5 LB	120.0"	1687.5 LB	120.0"	1687.5 LB
	+/- 42 PSF	81.9"	1292.6 LB	90.7"	1431.2 LB	98.2"	1550.5 LB	105.6"	1667.5 LB	120.0"	1894.5 LB	120.0"	1894.5 LB	120.0"	1894.5 LB	120.0"	1894.5 LB
	+/- 46 PSF	79.5"	1371.2 LB	88.0"	1518.2 LB	95.4"	1644.9 LB	102.5"	1768.9 LB	118.8"	2048.7 LB	120.0"	2070.0 LB	120.0"	2070.0 LB	120.0"	2070.0 LB
	+/- 50 PSF	77.3"	1449.6 LB	85.6"	1605.0 LB	92.7"	1738.9 LB	99.7"	1870.0 LB	115.5"	2165.8 LB	120.0"	2250.0 LB	120.0"	2250.0 LB	120.0"	2250.0 LB
	+/- 56 PSF	74.3"	1570.8 LB	82.2"	1739.2 LB	89.1"	1884.3 LB	95.8"	2026.4 LB	111.0"	2346.9 LB	115.3"	2438.6 LB	120.0"	2538.0 LB	120.0"	2538.0 LB
	+/- 68 PSF	69.8"	1779.4 LB	77.3"	1970.2 LB	83.7"	2134.5 LB	90.0"	2295.5 LB	104.3"	2658.6 LB	108.3"	2762.4 LB	120.0"	3060.0 LB	120.0"	3060.0 LB
120"	+/- 38 PSF	82.2"	1283.7 LB	91.0"	1421.3 LB	98.6"	1539.9 LB	106.0"	1656.0 LB	120.0"	1875.0 LB	120.0"	1875.0 LB	120.0"	1875.0 LB	120.0"	1875.0 LB
	+/- 42 PSF	79.0"	1386.6 LB	87.5"	1535.3 LB	94.8"	1663.4 LB	102.0"	1788.8 LB	118.1"	2071.8 LB	120.0"	2105.0 LB	120.0"	2105.0 LB	120.0"	2105.0 LB
	+/- 46 PSF	76.7"	1471.0 LB	85.0"	1628.7 LB	92.1"	1764.6 LB	99.0"	1897.6 LB	114.7"	2197.8 LB	119.1"	2283.7 LB	120.0"	2300.0 LB	120.0"	2300.0 LB
	+/- 50 PSF	74.6"	1555.1 LB	82.6"	1721.8 LB	89.5"	1865.4 LB	96.3"	2006.1 LB	111.5"	2323.4 LB	115.9"	2414.2 LB	120.0"	2500.0 LB	120.0"	2500.0 LB
	+/- 56 PSF	71.7"	1685.1 LB	79.4"	1865.8 LB	86.0"	2021.4 LB	92.5"	2173.9 LB	107.1"	2517.7 LB	111.3"	2616.1 LB	120.0"	2820.0 LB	120.0"	2820.0 LB
	+/- 68 PSF	67.4"	1908.9 LB	74.6"	2113.5 LB	80.8"	2289.9 LB	86.9"	2462.5 LB	100.7"	2852.1 LB	104.6"	2963.5 LB	120.0"	3400.0 LB	120.0"	3400.0 LB
132"	+/- 38 PSF	79.6"	1367.9 LB	88.1"	1514.6 LB	95.5"	1640.9 LB	102.7"	1764.7 LB	118.9"	2043.8 LB	120.0"	2062.5 LB	120.0"	2062.5 LB	120.0"	2062.5 LB
	+/- 42 PSF	76.6"	1477.6 LB	84.8"	1636.0 LB	91.9"	1772.5 LB	98.8"	1906.2 LB	114.4"	2207.7 LB	118.9"	2293.9 LB	120.0"	2315.5 LB	120.0"	2315.5 LB
	+/- 46 PSF	74.3"	1567.5 LB	82.3"	1735.6 LB	89.2"	1880.3 LB	95.9"	2022.1 LB	111.1"	2342.0 LB	115.4"	2433.5 LB	120.0"	2530.0 LB	120.0"	2530.0 LB
	+/- 50 PSF	72.3"	1657.1 LB	80.1"	1834.8 LB	86.7"	1987.8 LB	93.3"	2137.7 LB	108.0"	2475.9 LB	112.3"	2572.6 LB	120.0"	2750.0 LB	120.0"	2750.0 LB
	+/- 56 PSF	69.5"	1795.7 LB	76.9"	1988.2 LB	83.3"	2154.0 LB	89.6"	2316.5 LB	103.8"	2682.9 LB	107.8"	2787.7 LB	120.0"	3102.0 LB	120.0"	3102.0 LB
147"	+/- 38 PSF	76.8"	1469.7 LB	85.0"	1627.2 LB	92.1"	1763.0 LB	99.1"	1895.9 LB	114.7"	2195.8 LB	119.2"	2281.6 LB	120.0"	2296.9 LB	120.0"	2296.9 LB
	+/- 42 PSF	73.5"	1605.4 LB	81.3"	1777.5 LB	88.1"	1925.8 LB	94.8"	2071.0 LB	109.8"	2398.6 LB	114.1"	2492.3 LB	120.0"	2622.2 LB	120.0"	2622.2 LB
	+/- 46 PSF	70.6"	1736.9 LB	78.2"	1923.1 LB	84.7"	2083.6 LB	91.1"	2240.7 LB	105.5"	2595.1 LB	109.6"	2696.5 LB	120.0"	2951.0 LB	120.0"	2951.0 LB
	+/- 50 PSF	68.0"	1871.9 LB	75.3"	2072.6 LB	81.6"	2245.5 LB	87.8"	2414.8 LB	101.7"	2796.8 LB	105.6"	2906.0 LB	120.0"	3301.6 LB	120.0"	3301.6 LB
	+/- 56 PSF	63.9"	2073.0 LB	71.3"	2312.2 LB	77.3"	2505.1 LB	83.0"	2690.4 LB	96.2"	3120.1 LB	100.0"	3242.0 LB	120.0"	3890.5 LB	120.0"	3890.5 LB

END RETENTION MULLION SCHEDULE NOTES:

1. PRESSURES SHOWN IN "END RETENTION MULLION SCHEDULE" ARE MAXIMUM ALLOWABLE MULLION LENGTHS AT EACH RESPECTIVE SLAT SPAN AND DESIGN PRESSURE.
2. "END RETENTION MULLION SCHEDULES" ARE APPLICABLE TO ALL END RETENTION MULLIONS.
3. "INTERMEDIATE MULLIONS" ARE AS DEFINED IN ELEVATION 1/9.
4. SEE BILL OF MATERIALS FOR MULLION AND REINFORCEMENT MATERIALS.
5. ALLOWABLE DESIGN PRESSURES AND SLAT SPANS INDICATED ARE FOR DETERMINING PERMISSIBLE MULLION LENGTHS ONLY. ACTUAL SLAT SPANS AND DESIGN PRESSURES SHALL NOT EXCEED THOSE INDICATED IN SPAN SCHEDULES.
6. "END REACTIONS" ARE LISTED FOR EACH COMBINATION OF DESIGN LOAD, MULLION TYPE, & SLAT SPAN. CHOOSE MOUNTING CONNECTIONS (PER APPLICABLE CONNECTION DETAILS HEREIN) THAT PROVIDES "CONNECTION CAPACITY" GREATER THAN OR EQUAL TO "END REACTIONS" GIVEN ABOVE.
7. THIS SCHEDULE MAY BE USED FOR ALL MOUNTING CONDITIONS LISTED HEREIN.
8. ////// DENOTES CONDITIONS NOT APPROVED FOR USE.

***NOTE**: STEEL REINFORCEMENT LENGTH SHALL BE A MINIMUM OF 90% THE MULLION LENGTH, LOCATED AT THE CENTER OF THE MULLION AND FASTENED IN PLACE WITH #14 18-8 SS OR COATED SAE GR. 5 STAINLESS STEEL SMS OR SDS AT 12" O.C. MAX STAGGERED ALONG THE FULL REINFORCEMENT LENGTH. (REFERENCE STEEL REINFORCEMENT DETAIL)

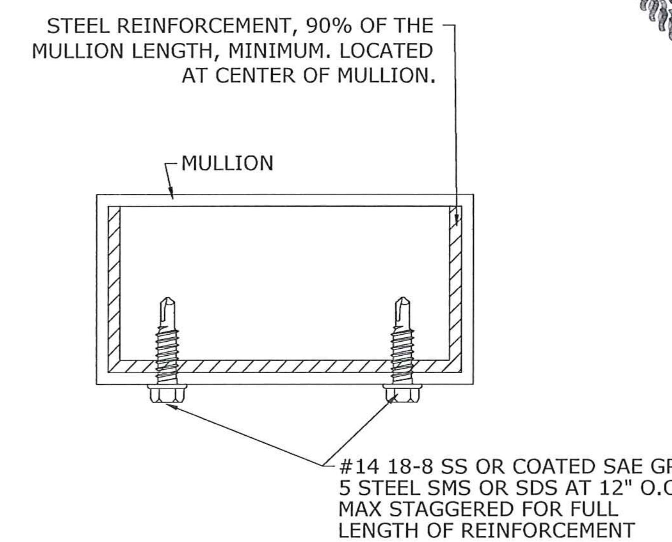

1/11 TYPICAL REINFORCEMENT
N.T.S. SECTION

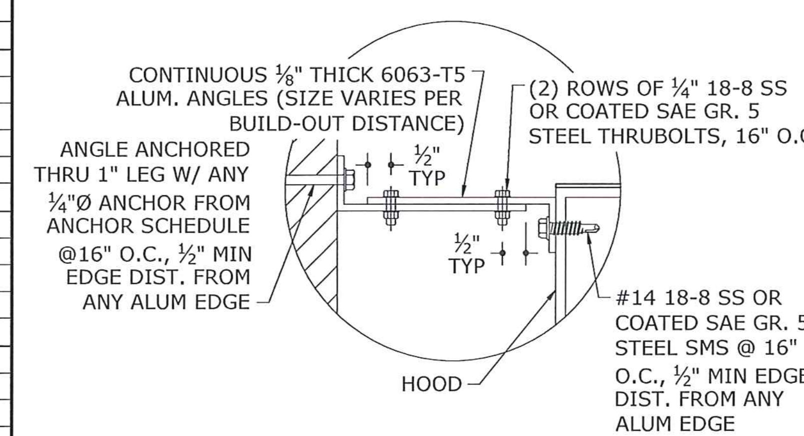

2/11 ALTERNATE BUILD-OUT HOOD CONNECTION
N.T.S. SECTION

FRANK L. BENNARDO, P.E.
PE96841
STATE OF TEXAS
07/17/2015
FRANK L. BENNARDO
96841
LICENSED PROFESSIONAL ENGINEER
FRANK L. BENNARDO, P.E.
160 SW 12th AVE, SUITE 106
DEERFIELD BEACH, FL 33442
PH: (954) 354-0660 FAX: (954) 354-0443
POWERED BY THE INNOVATORS AT
ENGINEERING EXPRESS®
EXPERIENCE MORE AT WWW.ENGEXP.COM
Town & Country INDUSTRIES
Wholesale Aluminum and Building Products
A Division of ABC Supply Co. Inc.
400 WEST MCNAB ROAD
FT. LAUDERDALE, FL 33309

REMARKS	DRWN	CHKD	DATE
INIT ISSUE	KL	FLB	04/25/14
REV (TDI)	RWN	TSB	06/04/14

THIS DOCUMENT IS THE PROPERTY OF FRANK L. BENNARDO, P.E. AND SHALL NOT BE REPRODUCED IN WHOLE OR PART WITHOUT WRITTEN CONSENT OF FRANK L. BENNARDO, P.E. ALTERATIONS, ADDITIONS, HIGHLIGHTING, OR OTHER MARKINGS TO THIS DOCUMENT ARE NOT PERMITTED AND INVALIDATE OUR CERTIFICATION.
COPYRIGHT FRANK L. BENNARDO P.E.

14-1627a

SCALE: -

PAGE DESCRIPTION:
-
-

END RETENTION MULLION SCHEDULE: END MULLIONS

SLAT SPAN	DESIGN PRESSURE	3"x3"x0.125" W/ 2.75"x2.75"x1/8" STEEL REINF.*				3"x3"x0.25"				4"x4"x0.125" W/ 3.75"x3.75"x1/8" STEEL REINF.*				4"x4"x0.25"				4"x6"x0.25"				4"x8"x0.25"			
		MAX MULLION LENGTH	END REACTION Rv	END REACTION Rt	END REACTION Rsum	MAX MULLION LENGTH	END REACTION Rv	END REACTION Rt	END REACTION Rsum	MAX MULLION LENGTH	END REACTION Rv	END REACTION Rt	END REACTION Rsum	MAX MULLION LENGTH	END REACTION Rv	END REACTION Rt	END REACTION Rsum	MAX MULLION LENGTH	END REACTION Rv	END REACTION Rt	END REACTION Rsum	MAX MULLION LENGTH	END REACTION Rv	END REACTION Rt	END REACTION Rsum
62"	+/- 38 PSF	120.0"	0.0 LB	484.4 LB	484.4 LB	120.0"	0.0 LB	484.4 LB	484.4 LB	120.0"	0.0 LB	484.4 LB	484.4 LB	120.0"	0.0 LB	484.4 LB	484.4 LB	120.0"	0.0 LB	484.4 LB	484.4 LB	120.0"	0.0 LB	484.4 LB	484.4 LB
	+/- 42 PSF	120.0"	133.1 LB	543.8 LB	559.8 LB	120.0"	133.1 LB	543.8 LB	559.8 LB	120.0"	133.1 LB	543.8 LB	559.8 LB	120.0"	133.1 LB	543.8 LB	559.8 LB	120.0"	133.1 LB	543.8 LB	559.8 LB	120.0"	133.1 LB	543.8 LB	559.8 LB
	+/- 46 PSF	120.0"	293.6 LB	594.2 LB	662.8 LB	120.0"	293.6 LB	594.2 LB	662.8 LB	120.0"	293.6 LB	594.2 LB	662.8 LB	120.0"	293.6 LB	594.2 LB	662.8 LB	120.0"	293.6 LB	594.2 LB	662.8 LB	120.0"	293.6 LB	594.2 LB	662.8 LB
	+/- 50 PSF	117.2"	447.7 LB	630.8 LB	773.5 LB	120.0"	458.3 LB	645.8 LB	791.9 LB	120.0"	458.3 LB	645.8 LB	791.9 LB	120.0"	458.3 LB	645.8 LB	791.9 LB	120.0"	458.3 LB	645.8 LB	791.9 LB	120.0"	458.3 LB	645.8 LB	791.9 LB
	+/- 56 PSF	109.4"	658.2 LB	664.1 LB	935.0 LB	120.0"	722.0 LB	728.5 LB	1025.7 LB	120.0"	722.0 LB	728.5 LB	1025.7 LB	120.0"	722.0 LB	728.5 LB	1025.7 LB	120.0"	722.0 LB	728.5 LB	1025.7 LB	120.0"	722.0 LB	728.5 LB	1025.7 LB
	+/- 68 PSF	92.1"	920.8 LB	673.8 LB	1141.0 LB	120.0"	1200.3 LB	878.3 LB	1487.4 LB	120.0"	1200.3 LB	878.3 LB	1487.4 LB	120.0"	1200.3 LB	878.3 LB	1487.4 LB	120.0"	1200.3 LB	878.3 LB	1487.4 LB	120.0"	1200.3 LB	878.3 LB	1487.4 LB
	+/- 76 PSF	84.0"	1071.2 LB	687.0 LB	1272.6 LB	110.8"	1413.0 LB	906.3 LB	1678.7 LB	120.0"	1530.6 LB	981.7 LB	1818.3 LB	120.0"	1530.6 LB	981.7 LB	1818.3 LB	120.0"	1530.6 LB	981.7 LB	1818.3 LB	120.0"	1530.6 LB	981.7 LB	1818.3 LB
	+/- 93 PSF	72.1"	1341.9 LB	721.8 LB	1523.7 LB	94.8"	1764.3 LB	949.0 LB	2003.3 LB	104.5"	1943.8 LB	1045.6 LB	2207.2 LB	120.0"	2233.2 LB	1201.3 LB	2535.8 LB	120.0"	2233.2 LB	1201.3 LB	2535.8 LB	120.0"	2233.2 LB	1201.3 LB	2535.8 LB
72"	+/- 42 PSF	104.7"	860.1 LB	550.8 LB	1021.3 LB	120.0"	986.1 LB	631.5 LB	1171.0 LB	120.0"	986.1 LB	631.5 LB	1171.0 LB	120.0"	986.1 LB	631.5 LB	1171.0 LB	120.0"	986.1 LB	631.5 LB	1171.0 LB	120.0"	986.1 LB	631.5 LB	1171.0 LB
	+/- 46 PSF	97.3"	964.1 LB	559.6 LB	1114.8 LB	120.0"	1188.7 LB	690.0 LB	1374.5 LB	120.0"	1188.7 LB	690.0 LB	1374.5 LB	120.0"	1188.7 LB	690.0 LB	1374.5 LB	120.0"	1188.7 LB	690.0 LB	1374.5 LB	120.0"	1188.7 LB	690.0 LB	1374.5 LB
	+/- 50 PSF	91.2"	1061.6 LB	570.0 LB	1204.9 LB	119.9"	1395.7 LB	749.5 LB	1584.2 LB	120.0"	1396.7 LB	750.0 LB	1585.4 LB	120.0"	1396.7 LB	750.0 LB	1585.4 LB	120.0"	1396.7 LB	750.0 LB	1585.4 LB	120.0"	1396.7 LB	750.0 LB	1585.4 LB
	+/- 56 PSF	83.4"	1202.7 LB	588.1 LB	1338.8 LB	109.5"	1578.7 LB	772.0 LB	1757.3 LB	116.2"	1675.1 LB	819.1 LB	1864.7 LB	120.0"	1730.1 LB	846.0 LB	1925.9 LB	120.0"	1730.1 LB	846.0 LB	1925.9 LB	120.0"	1730.1 LB	846.0 LB	1925.9 LB
	+/- 68 PSF	73.3"	1426.1 LB	622.7 LB	1556.1 LB	96.0"	1868.1 LB	815.7 LB	2038.4 LB	105.1"	2046.3 LB	893.6 LB	2232.9 LB	119.4"	2324.8 LB	1015.2 LB	2536.8 LB	120.0"	2335.8 LB	1020.0 LB	2548.8 LB	120.0"	2335.8 LB	1020.0 LB	2548.8 LB
	+/- 76 PSF	68.1"	1562.8 LB	646.7 LB	1691.3 LB	89.1"	2045.3 LB	846.4 LB	2213.5 LB	97.7"	2242.9 LB	928.2 LB	2427.4 LB	113.0"	2595.0 LB	1073.9 LB	2808.4 LB	120.0"	2754.7 LB	1140.0 LB	2981.3 LB	120.0"	2754.7 LB	1140.0 LB	2981.3 LB
84"	+/- 38 PSF	90.1"	1175.3 LB	492.9 LB	1274.5 LB	118.0"	1538.5 LB	645.2 LB	1668.3 LB	120.0"	1564.9 LB	656.3 LB	1697.0 LB	120.0"	1564.9 LB	656.3 LB	1697.0 LB	120.0"	1564.9 LB	656.3 LB	1697.0 LB	120.0"	1564.9 LB	656.3 LB	1697.0 LB
	+/- 42 PSF	83.4"	1295.1 LB	512.0 LB	1392.6 LB	109.0"	1693.7 LB	669.5 LB	1821.3 LB	113.3"	1760.4 LB	695.9 LB	1892.9 LB	120.0"	1863.8 LB	736.8 LB	2004.1 LB	120.0"	1863.8 LB	736.8 LB	2004.1 LB	120.0"	1863.8 LB	736.8 LB	2004.1 LB
	+/- 46 PSF	78.7"	1388.9 LB	528.1 LB	1485.9 LB	102.9"	1815.2 LB	690.2 LB	1942.0 LB	108.6"	1916.5 LB	728.7 LB	2050.3 LB	120.0"	2117.1 LB	805.0 LB	2265.0 LB	120.0"	2117.1 LB	805.0 LB	2265.0 LB	120.0"	2117.1 LB	805.0 LB	2265.0 LB
	+/- 50 PSF	74.7"	1479.0 LB	544.5 LB	1576.0 LB	97.5"	1931.9 LB	711.2 LB	2058.7 LB	104.5"	2070.1 LB	762.1 LB	2206.0 LB	118.7"	2351.9 LB	865.8 LB	2506.2 LB	120.0"	2376.8 LB	875.0 LB	2532.7 LB	120.0"	2376.8 LB	875.0 LB	2532.7 LB
	+/- 56 PSF	69.3"	1612.9 LB	570.1 LB	1710.7 LB	90.5"	2105.5 LB	744.3 LB	2233.1 LB	99.0"	2303.0 LB	814.1 LB	2442.6 LB	112.5"	2618.4 LB	925.6 LB	2777.2 LB	120.0"	2792.1 LB	987.0 LB	2961.4 LB	120.0"	2792.1 LB	987.0 LB	2961.4 LB
	+/- 68 PSF	62.0"	1830.9 LB	614.7 LB	1931.4 LB	80.9"	2388.2 LB	801.8 LB	2519.2 LB	88.4"	2610.1 LB	876.4 LB	2753.3 LB	103.9"	3069.8 LB	1030.7 LB	3238.2 LB	111.3"	3288.0 LB	1103.9 LB	3468.4 LB	117.8"	3480.5 LB	1168.6 LB	3671.5 LB
	+/- 76 PSF	58.1"	1967.3 LB	644.1 LB	2070.1 LB	75.8"	2565.1 LB	839.8 LB	2699.0 LB	82.8"	2802.3 LB	917.4 LB	2948.7 LB	98.7"	3340.3 LB	1093.6 LB	3514.7 LB	106.4"	3601.2 LB	1179.0 LB	3789.2 LB	112.6"	3812.1 LB	1248.0 LB	4011.1 LB
96"	+/- 38 PSF	77.2"	1485.0 LB	482.3 LB	1561.3 LB	100.6"	1936.0 LB	628.7 LB	2035.5 LB	105.5"	2030.9 LB	659.5 LB	2135.3 LB	119.9"	2307.3 LB	749.3 LB	2425.9 LB	120.0"	2309.5 LB	750.0 LB	2428.2 LB	120.0"	2309.5 LB	750.0 LB	2428.2 LB
	+/- 42 PSF	72.0"	1604.6 LB	505.3 LB	1682.3 LB	93.8"	2090.9 LB	658.5 LB	2192.2 LB	100.5"	2239.1 LB	705.2 LB	2347.5 LB	114.2"	2543.8 LB	801.1 LB	2667.0 LB	120.0"	2673.6 LB	842.0 LB	2803.1 LB	120.0"	2673.6 LB	842.0 LB	2803.1 LB
	+/- 46 PSF	68.4"	1699.4 LB	524.3 LB	1778.4 LB	89.1"	2213.8 LB	683.0 LB	2316.8 LB	96.9"	2408.2 LB	742.9 LB	2520.2 LB	110.1"	2735.9 LB	844.0 LB	2863.1 LB	117.9"	2930.4 LB	904.0 LB	3066.7 LB	120.0"	2982.1 LB	920.0 LB	3120.8 LB
	+/- 50 PSF	65.2"	1791.4 LB	543.1 LB	1871.9 LB	84.9"	2333.0 LB	707.4 LB	2437.9 LB	92.6"	2545.9 LB	771.9 LB	2660.4 LB	106.5"	2926.0 LB	887.1 LB	3057.5 LB	114.0"	3134.0 LB	950.2 LB	3274.9 LB	120.0"	3298.2 LB	1000.0 LB	3446.5 LB
	+/- 56 PSF	60.9"	1929.3 LB	572.2 LB	2012.4 LB	79.3"	2511.9 LB	745.0 LB	2620.0 LB	86.5"	2740.2 LB	812.7 LB	2858.2 LB	101.5"	3217.6 LB	954.3 LB	3356.1 LB	108.7"	3446.3 LB	1022.1 LB	3594.7 LB	115.1"	3648.2 LB	1082.0 LB	3805.2 LB
	+/- 68 PSF	54.9"	2156.6 LB	621.7 LB	2244.4 LB	71.4"	2806.5 LB	809.1 LB	2920.8 LB	77.9"	3060.4 LB	882.3 LB	3185.1 LB	92.9"	3651.4 LB	1052.7 LB	3800.1 LB	101.2"	3978.3 LB	1147.0 LB	4140.4 LB	107.1"	4211.3 LB	1214.1 LB	4382.8 LB
108"	+/- 38 PSF	68.8"	1734.7 LB	483.6 LB	1800.9 LB	89.5"	2256.5 LB	629.1 LB	2342.6 LB	96.4"	2431.9 LB	678.0 LB	2524.7 LB	109.6"	2762.9 LB	770.3 LB	2868.3 LB	117.3"	2959.3 LB	825.1 LB	3072.2 LB	120.0"	3026.4 LB	843.8 LB	3141.8 LB
	+/- 42 PSF	64.5"	1859.3 LB	508.9 LB	1927.7 LB	83.8"	2417.9 LB	661.8 LB	2506.8 LB	91.4"	2634.7 LB	721.2 LB	2731.7 LB	104.8"	3021.3 LB	827.0 LB	3132.4 LB	112.2"	3236.1 LB	885.8 LB	3355.1 LB	118.8"	3425.6 LB	937.6 LB	3551.6 LB
	+/- 46 PSF	61.4"	1958.6 LB	529.5 LB	2028.9 LB	79.8"	2546.6 LB	688.4 LB	2638.0 LB	87.0"	2774.5 LB	750.1 LB	2874.1 LB	101.3"	3231.8 LB	873.7 LB	3347.8 LB	108.5"	3461.5 LB	935.8 LB	3585.7 LB	114.9"	3664.2 LB	990.6 LB	3795.7 LB
	+/- 50 PSF	58.6"	2055.3 LB	549.8 LB	2127.6 LB	76.2"	2672.0 LB	714.8 LB	2766.0 LB	83.1"	2910.7 LB	778.7 LB	3013.1 LB	98.2"	3440.5 LB	920.4 LB	3561.5 LB	105.2"	3685.1 LB	985.8 LB	3814.6 LB	111.3"	3900.9 LB	1043.6 LB	4038.0 LB
	+/- 56 PSF	54.9"	2201.1 LB	581.0 LB	2276.5 LB	71.4"	2861.0 LB	755.2 LB	2959.0 LB	77.8"	3116.1 LB	822.5 LB	3222.8 LB	92.9"	3720.0 LB	982.0 LB	3847.5 LB	100.6"	4028.9 LB	1063.5 LB	4166.9 LB	106.5"	4264.9 LB	1125.8 LB	4410.9 LB
	+/- 68 PSF	49.7"	2442.7 LB	633.8 LB	2523.6 LB	64.6"	3174.2 LB	823.7 LB	3279.3 LB	70.3"	3456.4 LB	896.9 LB	3570.9 LB	84.0"	4126.8 LB	1070.9 LB	4263.5 LB	94.0"	4616.3 LB	1197.9 LB	4769.2 LB	99.5"	4886.6 LB	1268.0 LB	5048.5 LB
120"	+/- 38 PSF	62.7"	1951.3 LB	490.0 LB	2011.9 LB	81.5"	2534.6 LB	636.4 LB	2613.3 LB	88.7"	2758.7 LB	692.7 LB	2844.3 LB	102.1"	3178.2 LB	798.0 LB	3276.9 LB	109.4"	3404.1 LB	854.7 LB	3509.8 LB	115.8"	3603.5 LB	904.8 LB	3715.3 LB
	+/- 42 PSF	58.9"	2082.5 LB	516.8 LB	2145.7 LB	76.5"	2704.6 LB	671.2 LB	2786.6 LB	83.3"	2943.3 LB	730.4 LB	3032.6 LB	97.9"	3460.0 LB	858.6 LB	3565.0 LB	104.9"	3706.0 LB	919.7 LB	3818.4 LB	111.0"	3923.0 LB	973.5 LB	4042.0 LB
	+/- 46 PSF	56.2"	2187.4 LB	538.6 LB	2252.7 LB	73.0"	2840.5 LB	699.4 LB	2925.4 LB	79.4"	3090.9 LB	761.0 LB	3183.2 LB	94.8"	3689.9 LB	908.5 LB	3800.1 LB	101.5"	3952.2 LB	973.1 LB	4070.2 LB	107.5"	4183.7 LB	1030.1 LB	4308.6 LB
	+/- 50 PSF	53.8"	2289.9 LB	560.0 LB	2357.4 LB	69.8"	2973.3 LB	727.2 LB	3061.0 LB	76.0"	3235.2 LB	791.2 LB	3330.5 LB	90.7"	3864.2 LB	945.1 LB	3978.0 LB	98.5"	4196.7 LB	1026.4 LB	4320.4 LB	104.3"	4442.5 LB	1086.5 LB	4573.4 LB
	+/- 56 PSF	50.5"	2444.6 LB	592.9 LB	2515.4 LB	65.5"	3173.6 LB	769.8 LB	3265.8 LB	71.3"	3452.9 LB	837.5 LB	3553.0 LB	85.1"	4124.5 LB	1000.3 LB	4244.1 LB	94.4"	4573.1 LB	1109.1 LB	4705.7 LB	99.9"	4840.9 LB	1174.1 LB	4981.2 LB
	+/- 68 PSF	45.8"	2701.5 LB	648.4 LB	2778.2 LB	59.4"	3506.9 LB	841.7 LB	3606.5 LB	64.6"	3814.8 LB	915.6 LB	3923.1 LB	77.2"	4557.0 LB	1093.7 LB	4686.5 LB	88.4"	5216.7 LB	1252.0 LB	5364.8 LB	93.6"	5522.2 LB	1325.4 LB	5679.0 LB
132"	+/- 38 PSF	58.0"	2148.7 LB	498.3 LB	2205.7 LB	75.2"	2788.0 LB	646.5 LB	2862.0 LB	81.8"	3031.5 LB	703.0 LB	3112.0 LB	96.4"	3571.1 LB	828.1 LB	3665.8 LB	103.2"	3824.9 LB	887.0 LB	3926.4 LB	109.3"	4048.9 LB	938.9 LB	4156.4 LB
	+/- 42 PSF	54.6"	2287.5 LB	526.3 LB	2347.3 LB	70.8"	2967.9 LB	682.9 LB	3045.5 LB	77.0"	3226.8 LB	742.5 LB	3311.1 LB	92.0"	3855.7 LB	887.2 LB	3956.4 LB	99.0"	4153.2 LB	955.6 LB	4261.8 LB	104.9"	4396.5 LB	1011.6 LB	4511.3 LB
	+/- 46 PSF	52.1"	2398.7 LB	549.1 LB	2460.8 LB	67.6"	3112.0 LB	712.3 LB	3192.5 LB	73.5"	3383.2 LB	774.4 LB	3470.7 LB	87.8"	4042.7 LB	925.4 LB	4147.3 LB	96.0"	4421.3 LB	1012.0 LB	4535.6 LB	101.6"	4680.2 LB	1071.3 LB	4801.2 LB
	+/- 50 PSF	49.9"	2507.4 LB	571.5 LB	2571.7 LB	64.7"	3252.9 LB	741.3 LB	3336.3 LB	70.3"	3536.2 LB	805.9 LB	3626.9 LB	84.0"	4225.6 LB	963.0 LB	4334.0 LB	93.2"	4687.6 LB	1068.3 LB	4807.8 LB	98.7"	4962.1 LB	1130.9 LB	5089.3 LB
	+/- 56 PSF	46.9"	2671.8 LB	605.6 LB	2739.6 LB	60.8"	3465.9 LB	785.6 LB	3553.8 LB	66.1"	3767.5 LB	854.0 LB	3863.1 LB	79.0"	4502.2 LB	1020.5 LB	4616.4 LB	89.4"	5097.8 LB	1155.5 LB	5227.1 LB	94.6"	5396.3 LB	1223.2 LB	5533.2 LB
147"	+/- 38 PSF	53.3"	2377.7 LB	509.8 LB	2431.8 LB	69.1"	3082.3 LB	660.9 LB	3152.3 LB	75.0"	3348.3 LB	717.9 LB	3424.4 LB	89.7"	4002.6 LB	858.2 LB	4093.5 LB	97.0"	4330.0 LB	928.4 LB	4428.4 LB	102.7"	4583.5 LB	982.8 LB	4687.7 LB
	+/- 42 PSF	50.1"	2522.4 LB	547.3 LB	2581.1 LB	64.9"	3270.3 LB	709.6 LB	3346.4 LB	70.6"	3553.0 LB	770.9 LB	3635.7 LB	84.3"	4247.0 LB	921.5 LB	4345.8 LB	93.2"	4692.4 LB	1018.2 LB	4801.6 LB	98.6"	4967.2 LB	1077.8 LB	5082.7 LB
	+/- 46 PSF	47.7"	2633.6 LB	586.7 LB	2698.1 LB	61.9"	3415.5 LB	760.9 LB	3499.2 LB	67.3"	3712.0 LB	826.9 LB	3803.0 LB	80.4"	4436.3 LB	988.3 LB	4545.0 LB	90.4"	4988.4 LB	1111.3 LB	5110.7 LB	95.7"	5280.5 LB	1176.4 LB	5410.0 LB
	+/- 50 PSF	45.6"	2741.5 LB	627.0 LB	2812.3 LB	59.1"	3556.7 LB	813.5 LB	3648.5 LB	64.3"	3866.6 LB	884.4 LB	3966.5 LB	76.8"	4620.4 LB	1056.7 LB	4739.7 LB	87.8"	5282.6 LB	1208.2 LB	5419.0 LB	93.0"	5592.0 LB	1279.0 LB	5736.4 LB
	+/- 56 PSF	42.7"	2903.2 LB	691.5 LB	2984.4 LB	55.4"	3768.4 LB	897.6 LB	3873.8 LB	60.2"	4098.9 LB	976.3 LB	4213.5 LB	72.0"	4896.6 LB	1166.3 LB	5033.6 LB	84.3"	5735.9 LB	1366.3 LB	5896.4 LB	89.2"	6071.8 LB	1446.3 LB	6241.7 LB

***NOTE**: STEEL REINFORCEMENT LENGTH SHALL BE A MINIMUM OF 90% THE MULLION LENGTH, LOCATED AT THE CENTER OF THE MULLION AND FASTENED IN PLACE WITH #14 316 STAINLESS STEEL SMS OR SDS AT 12" O.C. MAX STAGGERED ALONG THE FULL REINFORCEMENT LENGTH. (REFERENCE STEEL REINFORCEMENT DETAIL 1/11)

END RETENTION MULLION SCHEDULE NOTES:

1. PRESSURES SHOWN IN "END RETENTION MULLION SCHEDULE" ARE MAXIMUM ALLOWABLE MULLION LENGTHS AT EACH RESPECTIVE SLAT SPAN AND DESIGN PRESSURE.
2. "END RETENTION MULLION SCHEDULES" ARE APPLICABLE TO ALL END RETENTION MULLIONS.
3. "END MULLIONS" ARE AS DEFINED IN ELEVATION 1/9.
4. SEE BILL OF MATERIALS FOR MULLION AND REINFORCEMENT MATERIALS.
5. ALLOWABLE DESIGN PRESSURES AND SLAT SPANS INDICATED ARE FOR DETERMINING PERMISSIBLE MULLION LENGTHS ONLY. ACTUAL SLAT SPANS AND DESIGN PRESSURES SHALL NOT EXCEED THOSE INDICATED IN SPAN SCHEDULES.
6. "END REACTIONS" ARE LISTED FOR EACH COMBINATION OF DESIGN LOAD, MULLION TYPE, & SLAT SPAN. CHOOSE MOUNTING CONNECTIONS (PER APPLICABLE CONNECTION DETAILS HEREIN) THAT PROVIDES "CONNECTION CAPACITY" GREATER THAN OR EQUAL TO "END REACTIONS" GIVEN ABOVE.
7. THIS SCHEDULE MAY BE USED FOR ALL MOUNTING CONDITIONS LISTED HEREIN.
8. [hatched box] DENOTES CONDITIONS NOT APPROVED FOR USE.

FRANK L. BENNARDO, P.E.
#96966

07/17/2015

FRANK L. BENNARDO, P.E.
160 SW 12th AVE., SUITE 106
DEERFIELD BEACH, FL 33442
PH: (954) 354-0660 FAX: (954) 354-0443

POWERED BY THE INNOVATORS AT
ENGINEERING EXPRESS®
EXPERIENCE MORE AT WWW.ENGEXP.COM

Town & Country INDUSTRIES
Wholesale Aluminum and Building Products
A Division of ABC Supply Co. Inc.
400 WEST MCNAB ROAD
FT. LAUDERDALE, FL 33309

REMARKS	DRWN	CHKD	DATE
INIT ISSUE	KL	FLB	04/25/14
REV (TDI)	RWN	TSB	06/04/14

THIS DOCUMENT IS THE PROPERTY OF FRANK L. BENNARDO, P.E. AND SHALL NOT BE REPRODUCED IN WHOLE OR PART WITHOUT WRITTEN CONSENT OF FRANK L. BENNARDO, P.E. ALTERATIONS, ADDITIONS, HIGHLIGHTING, OR OTHER MARKINGS TO THIS DOCUMENT ARE NOT PERMITTED AND INVALIDATE OUR CERTIFICATION.

COPYRIGHT FRANK L. BENNARDO P.E.

14-1627a

SCALE: -

PAGE DESCRIPTION:
-
-

STORM BAR AND INTERMEDIATE END RETENTION MULLION CONNECTION DETAILS

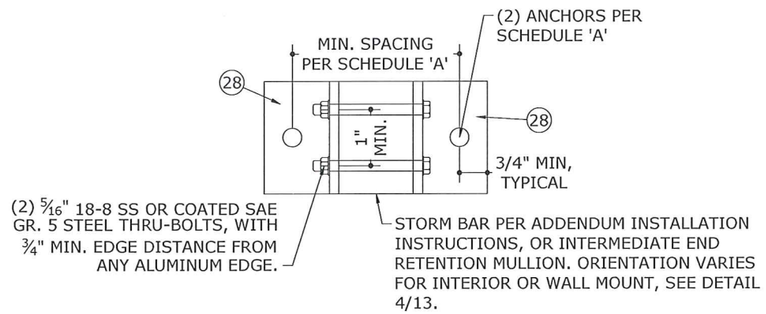

1/13 INTERIOR OR WALL MOUNT

N.T.S.

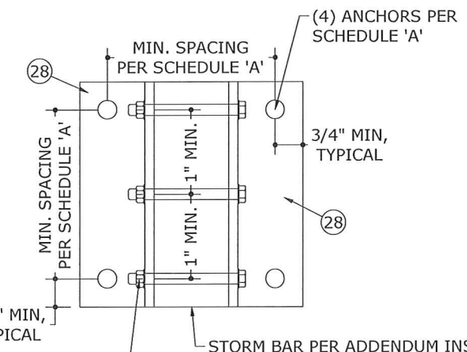

2/13 INTERIOR OR WALL MOUNT

N.T.S.

- CLUSTER OF (4) 3/8" POWERS WEDGE BOLTS AT CENTERED EACH STORM BAR W/ 3½" MIN. EMBED, 3" MIN. EDGE DISTANCE, AND 4½" SPACING TO 3KSI MIN. CONCRETE. BALANCE SPACED AT 18" O.C. MAX
- CLUSTER OF (4) 5/16" ITW TAPCONS AT CENTERED EACH STORM BAR W/ 2-1/4" MIN. EMBED, 4" MIN. EDGE DISTANCE, AND 4" SPACING TO GROUT-FILLED CONCRETE BLOCK. BALANCE SPACED AT 18" O.C. MAX
- CLUSTER OF (4) 5/16" LAG SCREWS AT CENTERED EACH STORM BAR W/ 2" MIN. THREAD PENETRATION, 1-1/4" MIN. EDGE DISTANCE, AND 2" SPACING TO G=0.42 MIN. WOOD. BALANCE SPACED AT 18" O.C. MAX

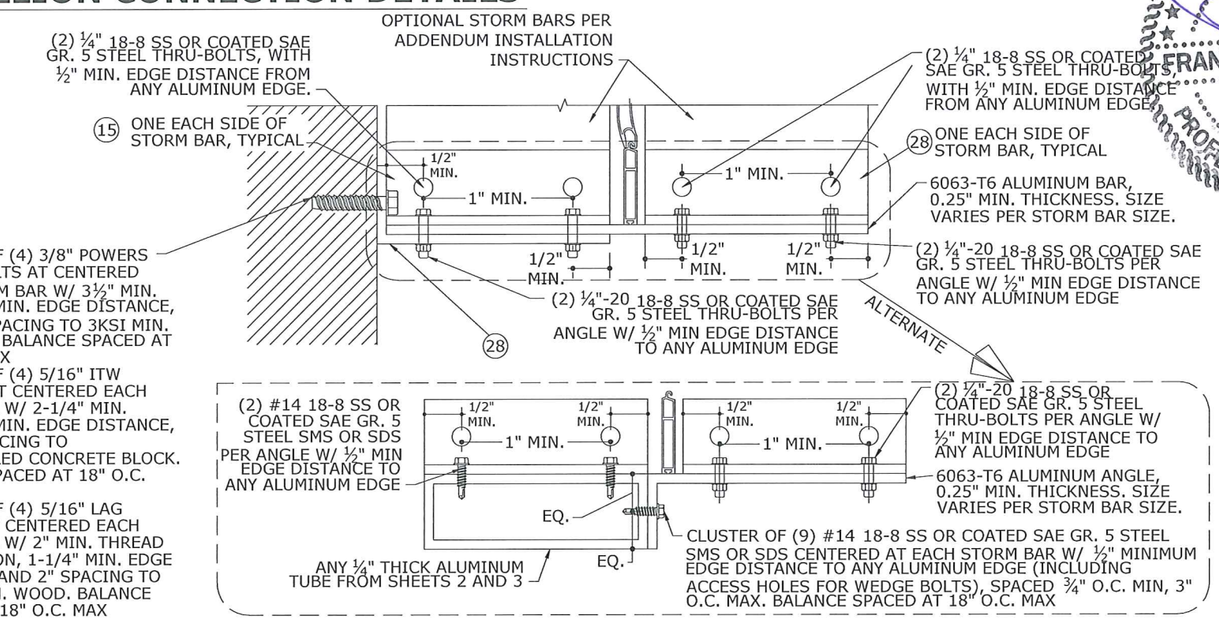

CONNECTION CAPACITY: 2276 LB

3/13 STORM BAR BUILD-OUT MOUNT

N.T.S.

VERT SECTION

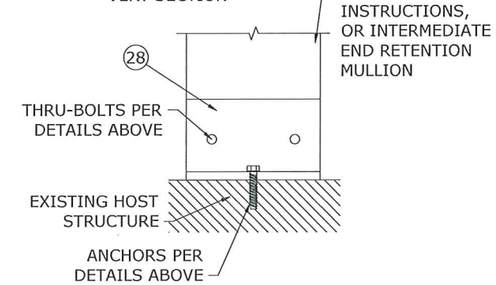

INTERIOR MOUNT

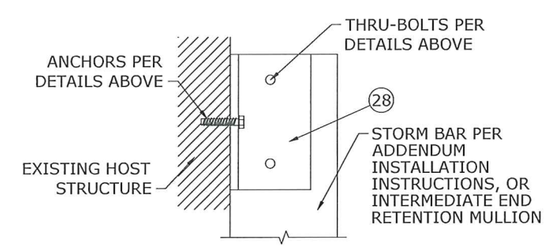

WALL MOUNT

4/13 MOUNTING CONDITIONS

N.T.S.

SCHEDULE 'A'

ANCHOR TYPE	MINIMUM SPACING	MINIMUM EDGE DISTANCE	CONNECTION DETAIL	MOUNTING CONDITION	CONNECTION CAPACITY
3/8" POWERS WEDGE BOLTS W/ 3-1/2" EMBED TO 3KSI MIN. CONCRETE	4.5"	4.5"	1/13	WALL MOUNT	4332 LB
				INTERIOR MOUNT	3065 LB
			2/13	WALL MOUNT	8820 LB
				INTERIOR MOUNT	6130 LB
3/8" POWERS STEEL DROPIN W/ 1-9/16" EMBED TO 3KSI MIN. CONCRETE	4.5"	5.25"	1/13	WALL MOUNT	1590 LB
				INTERIOR MOUNT	2290 LB
			2/13	WALL MOUNT	3180 LB
				INTERIOR MOUNT	4580 LB
3/8" POWERS WEDGE BOLTS W/ 3-1/2" EMBED TO GROUT-FILLED CONCRETE BLOCK	6.0"	12.0"	1/13	WALL MOUNT	2580 LB
				INTERIOR MOUNT	2200 LB
			2/13	WALL MOUNT	5160 LB
				INTERIOR MOUNT	4400 LB
5/16" ITW TAPCON XL OR ELCO ULTRACON W/ 2-1/4" MIN. EMBED TO 3.5KSI MIN. CONCRETE	5.0"	3.125"	1/13	WALL MOUNT	1576 LB
				INTERIOR MOUNT	1702 LB
			2/13	WALL MOUNT	3152 LB
				INTERIOR MOUNT	3404 LB
5/16" ITW TAPCON XL OR ELCO ULTRACON W/ 2-1/4" MIN. EMBED TO GROUT-FILLED CONCRETE BLOCK	5.0"	3.125"	1/13	WALL MOUNT	584 LB
				INTERIOR MOUNT	744 LB
			2/13	WALL MOUNT	1168 LB
				INTERIOR MOUNT	1488 LB
5/16" LAG SCREW W/ 2" MIN. THREAD PENETRATION TO G=0.42 MIN WOOD	2.0"	1.25"	1/13	WALL MOUNT	1310 LB
				INTERIOR MOUNT	302 LB
			2/13	WALL MOUNT	2620 LB
				INTERIOR MOUNT	604 LB

ANCHOR NOTES:

1. ANCHORS SHALL BE INSTALLED IN ACCORDANCE WITH MANUFACTURERS' RECOMMENDATIONS.
2. MINIMUM EMBEDMENT SHALL BE AS NOTED IN ANCHOR SCHEDULE. MINIMUM EMBEDMENT AND EDGE DISTANCE EXCLUDES STUCCO, FOAM, BRICK, AND OTHER WALL FINISHES.
3. ANCHOR SCHEDULE APPLIES TO ALL PRODUCTS CERTIFIED HEREIN.
4. WHERE EXISTING STRUCTURE IS WOOD FRAMING, EXISTING CONDITIONS MAY VARY. FIELD VERIFY THAT FASTENERS ARE INTO ADEQUATE WOOD FRAMING MEMBERS, NOT INTO PLYWOOD.
5. MACHINE SCREWS SHALL HAVE MINIMUM OF 5/8" ENGAGEMENT OF THREADS IN BASE ANCHOR AND MAY HAVE EITHER A PAN HEAD, TRUSS HEAD, OR WAFER HEAD ("SIDEWALK BOLT") U.N.O.
6. FOR INSTALLATIONS TO GROUT FILLED BLOCK, ANCHOR SHALL PENETRATE THROUGH FACE SHELL INTO GROUTED CELL.

FRANK L. BENNARDO, P.E. # PE96064
STATE OF TEXAS
07/17/2014
FRANK L. BENNARDO
96064
PROFESSIONAL ENGINEER
FRANK L. BENNARDO, P.E.
160 SW 12th AVENUE, #206
DEERFIELD BEACH, FL 33442
Ph: (954) 354-0660 Fax: (954) 354-0662
POWERED BY THE INNOVATIONS OF ENGINEERING EXPRESS®
EXPERIENCE MORE AT WWW.ENGEXP.COM

Town & Country INDUSTRIES
Wholesale Aluminum and Building Products
A Division of AGC Supply Co., Inc.
400 WEST MCNAB ROAD
FT. LAUDERDALE, FL 33309

REMARKS	DRWN	CHKD	DATE
INIT ISSUE	KL	FLB	04/25/14
REV (TDI)	RWN	TSB	06/04/14

THIS DOCUMENT IS THE PROPERTY OF FRANK L. BENNARDO, P.E. AND SHALL NOT BE REPRODUCED IN WHOLE OR IN PART WITHOUT WRITTEN CONSENT OF FRANK L. BENNARDO, P.E. * ALTERATIONS, ADDITIONS, HIGHLIGHTING, OR OTHER MARKINGS TO THIS DOCUMENT ARE NOT PERMITTED AND INVALIDATE OUR CERTIFICATION.
COPYRIGHT FRANK L. BENNARDO P.E.

14-1627a

SCALE: -

PAGE DESCRIPTION:
-
-

END RETENTION END MULLION CONNECTION DETAILS

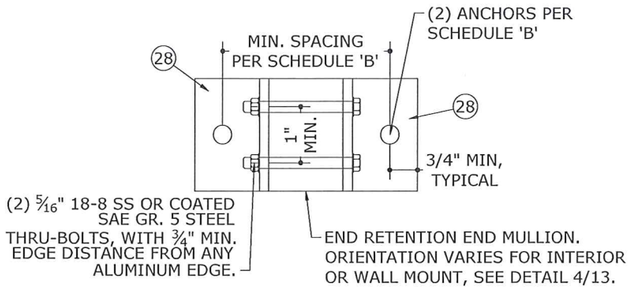

1/14 INTERIOR OR WALL MOUNT

N.T.S.

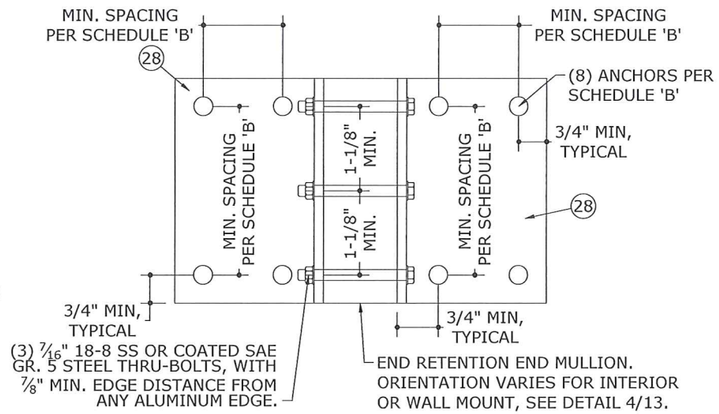

3/14 INTERIOR OR WALL MOUNT

N.T.S.

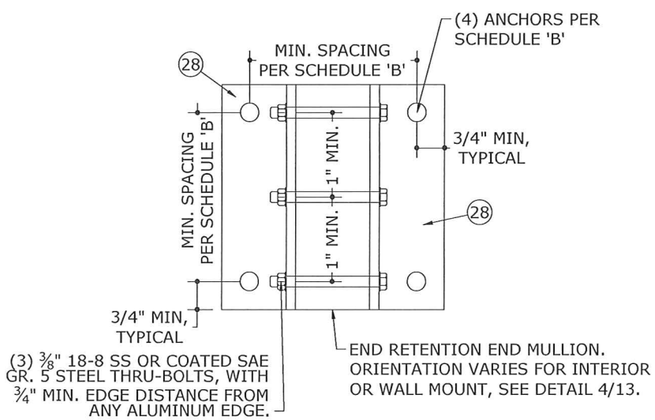

2/14 INTERIOR OR WALL MOUNT

N.T.S.

SCHEDULE 'B'

ANCHOR TYPE	MINIMUM SPACING	MINIMUM EDGE DISTANCE	CONNECTION DETAIL	CONNECTION CAPACITY	
3/8" POWERS WEDGE BOLTS W/ 3-1/2" EMBED TO 3KSI MIN. CONCRETE	4.5"	4.5"	1/16	Tcap	4332 LB
				Vcap	3065 LB
			2/16	Tcap	8820 LB
				Vcap	6130 LB
	2.5"	4.5"	3/16	Tcap	11819 LB
				Vcap	10176 LB
3/8" POWERS STEEL DROPIN W/ 1-9/16" EMBED TO 3KSI MIN. CONCRETE	4.5"	5.25"	1/16	Tcap	1590 LB
				Vcap	2290 LB
			2/16	Tcap	3180 LB
				Vcap	4580 LB
	2.5"	5.25"	3/16	Tcap	3689 LB
				Vcap	5313 LB
3/8" POWERS WEDGE BOLTS W/ 3-1/2" EMBED TO GROUT-FILLED CONCRETE BLOCK	6.0"	12.0"	1/16	Tcap	2580 LB
				Vcap	2200 LB
			2/16	Tcap	5160 LB
				Vcap	4400 LB
5/16" ITW TAPCON XL OR ELCO ULTRACON W/ 2-1/4" MIN. EMBED TO 3.5KSI MIN. CONCRETE	5.0"	3.125"	1/16	Tcap	1576 LB
				Vcap	1702 LB
			2/16	Tcap	3152 LB
				Vcap	3404 LB
5/16" ITW TAPCON XL OR ELCO ULTRACON W/ 2-1/4" MIN. EMBED TO GROUT-FILLED CONCRETE BLOCK	5.0"	3.125"	1/16	Tcap	584 LB
				Vcap	744 LB
			2/16	Tcap	1168 LB
				Vcap	1488 LB
5/16" LAG SCREW W/ 2" MIN. THREAD PENETRATION TO G=0.42 MIN WOOD	2.0"	1.25"	1/16	Tcap	1310 LB
				Vcap	302 LB
			2/16	Tcap	2620 LB
				Vcap	604 LB

SCHEDULE 'B' NOTES:

1. FOR INTERIOR MOUNT CONDITIONS WITH END RETENTION END MULLIONS, 'Rsum' VALUES IN MULLION SCHEDULE SHALL NOT EXCEED MAX 'Vcap' VALUES NOTED IN SCHEDULE 'B'.
2. FOR WALL MOUNT CONDITIONS WITH END RETENTION END MULLIONS, **Rv/Vcap + Rt/Tcap SHALL BE LESS THAN OR EQUAL TO 1.0**, WHERE 'Rv' AND 'Rt' ARE PER MULLION SCHEDULES, AND 'Tcap' AND 'Vcap' ARE PER SCHEDULE 'B'.
3. FOR INSTALLATIONS TO GROUT FILLED BLOCK, ANCHOR SHALL PENETRATE THROUGH FACE SHELL INTO GROUTED CELL.

STORM BAR TO HEADER CONNECTION DETAILS

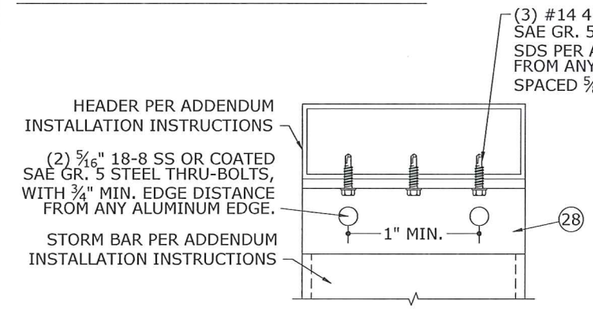

CONNECTION CAPACITY: 4262 LB

4/14 STORM BAR TO HEADER

N.T.S. VERT SECTION

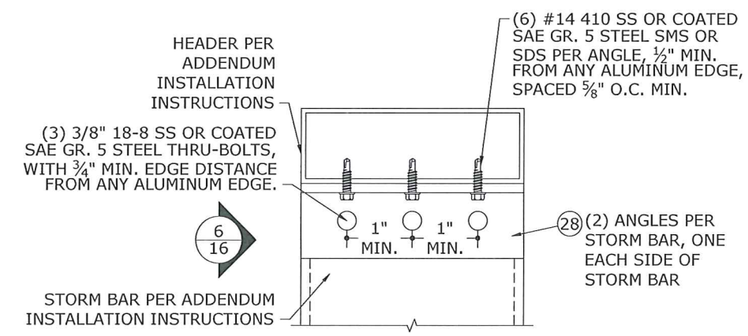

CONNECTION CAPACITY: 8524 LB

5/14 STORM BAR TO HEADER

N.T.S. VERT SECTION

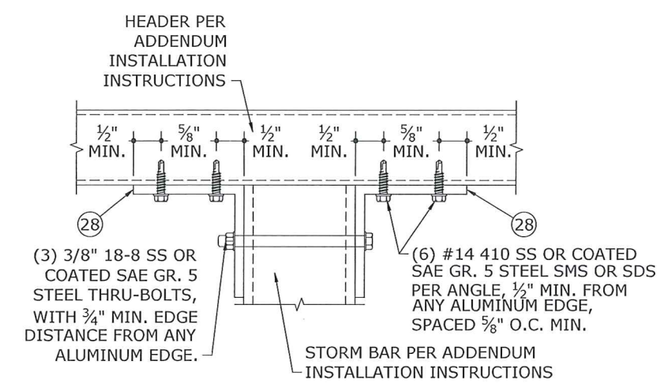

CONNECTION CAPACITY: 8524 LB

6/14 STORM BAR TO HEADER

N.T.S. VERT SECTION

FRANK L. BENNARDO P.E.
160 SW 12th AVENUE
DEERFIELD BEACH, FL 33442
Ph: (954) 354-0660 Fax: (954) 354-0663
POWERED BY THE INNOVATIONS OF ENGINEER EXPRESS®
EXPERIENCE MORE AT WWW.ENGEXP.COM

STATE OF FLORIDA — FRANK L. BENNARDO P.E. #PE96064 — 07-17-2014 — FRANK L. BENNARDO — 96064 — LICENSED PROFESSIONAL ENGINEER

Town & Country INDUSTRIES
Wholesale Aluminum and Building Products
A Division of ABC Supply Co., Inc.
400 WEST MCNAB ROAD
FT. LAUDERDALE, FL 33309

REMARKS	DRWN	CHKD	DATE
INIT ISSUE	KL	FLB	04/25/14
REV (TDI)	RWN	TSB	06/04/14

THIS DOCUMENT IS THE PROPERTY OF FRANK L. BENNARDO, P.E. AND SHALL NOT BE REPRODUCED IN WHOLE OR IN PART WITHOUT WRITTEN CONSENT OF FRANK L. BENNARDO, P.E. * ALTERATIONS, ADDITIONS, HIGHLIGHTING, OR OTHER MARKINGS TO THIS DOCUMENT ARE NOT PERMITTED AND INVALIDATE OUR CERTIFICATION.

COPYRIGHT FRANK L. BENNARDO P.E.

14-1627a

SCALE: -

PAGE DESCRIPTION:
-
-

HEADER CONNECTION DETAILS

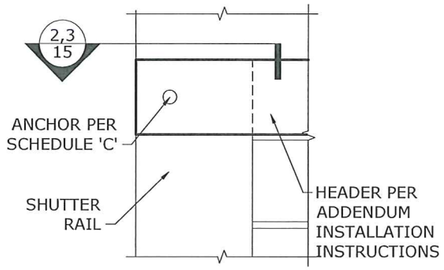

1/15 BUILD-OUT & WALL MOUNT
N.T.S. ELEV

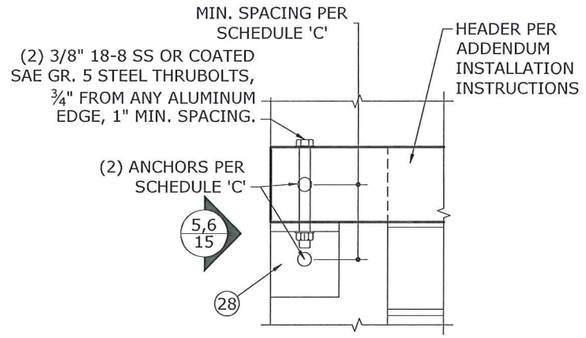

4/15 BUILD-OUT & WALL MOUNT
N.T.S. ELEV

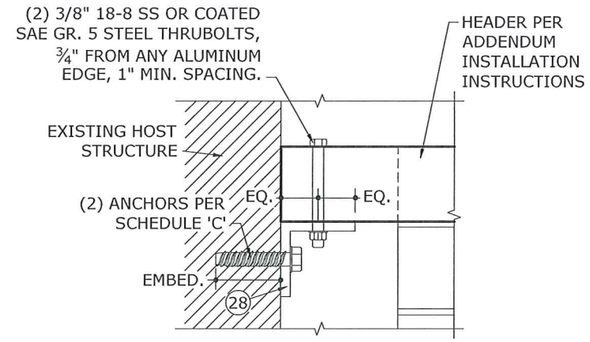

7/15 INTERIOR MOUNT
N.T.S. ELEV

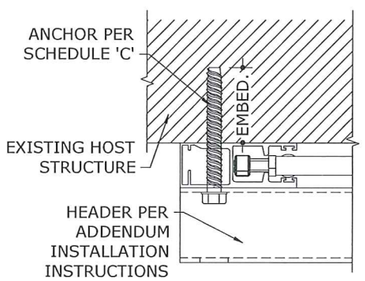

2/15 WALL MOUNT
N.T.S. HORIZ SECTION

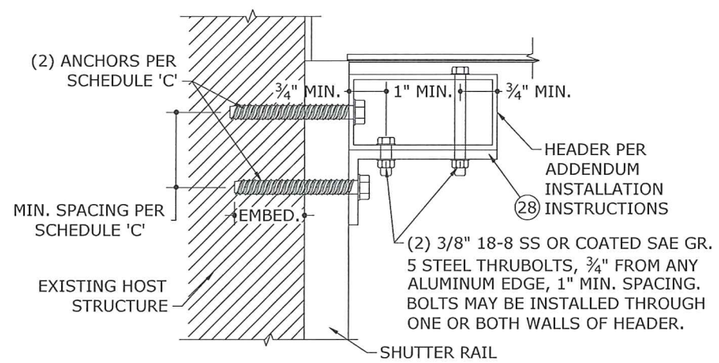

5/15 WALL MOUNT
N.T.S. VERT SECTION

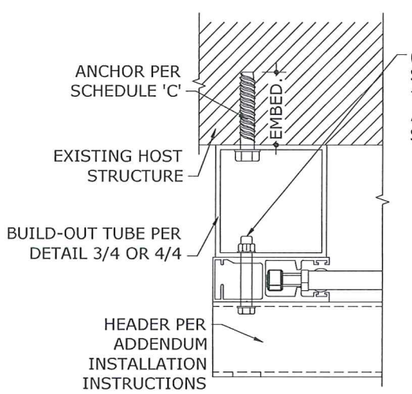

3/15 BUILD-OUT MOUNT
N.T.S. HORIZ SECTION

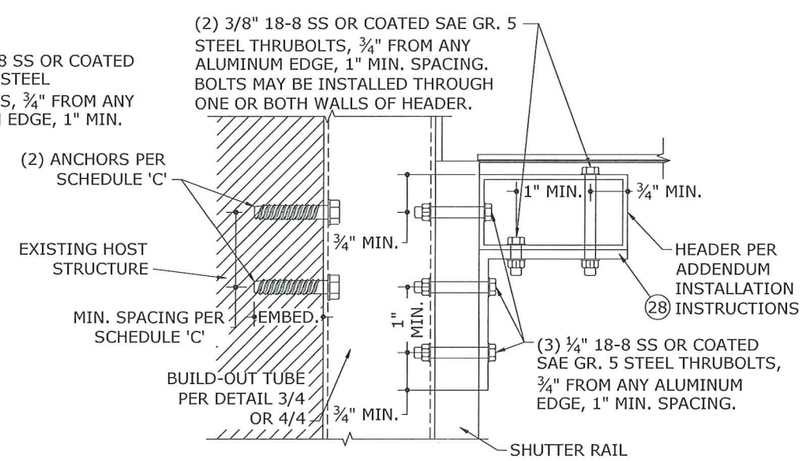

6/15 BUILD-OUT MOUNT
N.T.S. VERT SECTION

SCHEDULE 'C'

ANCHOR TYPE	MINIMUM SPACING	MINIMUM EDGE DISTANCE	MOUNTING CONDITION	NUMBER OF ANCHORS	CONNECTION CAPACITY
3/8" POWERS WEDGE BOLTS W/ 3-1/2" EMBED TO 3KSI MIN. CONCRETE	4.5"	4.5"	BUILD-OUT OR WALL MOUNT	1	2205 LB
				2	3093 LB
			INTERIOR MOUNT	1	1533 LB
				2	3065 LB
	2.5"	4.5"	BUILD-OUT OR WALL MOUNT	1	1477 LB
				2	2955 LB
			INTERIOR MOUNT	1	1272 LB
				2	2544 LB
3/8" POWERS WEDGE BOLTS W/ 3-1/2" EMBED TO GROUT-FILLED CONCRETE BLOCK	6.0"	12.0"	BUILD-OUT OR WALL MOUNT	1	1290 LB
				2	2580 LB
			INTERIOR MOUNT	1	1100 LB
				2	2200 LB
3/8" POWERS STEEL DROPIN W/ 1-9/16" EMBED TO 3KSI MIN. CONCRETE	4.5"	5.25"	BUILD-OUT OR WALL MOUNT	1	795 LB
				2	1590 LB
			INTERIOR MOUNT	1	1145 LB
				2	2290 LB
	2.5"	5.25"	BUILD-OUT OR WALL MOUNT	1	461 LB
				2	922 LB
			INTERIOR MOUNT	1	664 LB
				2	1328 LB
5/16" ITW TAPCON XL OR ELCO ULTRACON W/ 2-1/4" MIN. EMBED TO 3.5KSI MIN. CONCRETE	5.0"	4.0"	BUILD-OUT OR WALL MOUNT	1	788 LB
				2	1576 LB
			INTERIOR MOUNT	1	851 LB
				2	1702 LB
5/16" ITW TAPCON XL OR ELCO ULTRACON W/ 2-1/4" MIN. EMBED TO GROUT-FILLED CONCRETE BLOCK	5.0"	3.125"	BUILD-OUT OR WALL MOUNT	1	292 LB
				2	584 LB
			INTERIOR MOUNT	1	372 LB
				2	744 LB
5/16" LAG SCREW W/ 2" MIN. THREAD PENETRATION TO G=0.42 MIN WOOD	2.0"	1.25"	BUILD-OUT OR WALL MOUNT	1	655 LB
				2	1311 LB
			INTERIOR MOUNT	1	151 LB
				2	301 LB

NOTES:

1. ALL ANCHORS SHALL BE ¾" MINIMUM FROM ANY ALUMINUM EDGE.
2. FOR INSTALLATIONS TO GROUT FILLED BLOCK, ANCHOR SHALL PENETRATE THROUGH FACE SHELL INTO GROUTED CELL.

FRANK L. BENNARDO, P.E.
STATE OF TEXAS
07/17/2015
FRANK L. BENNARDO
LICENSED PROFESSIONAL ENGINEER
FRANK L. BENNARDO, P.E.
160 SW 12th AVENUE
DEERFIELD BEACH, FL 33441
Ph: (954) 354-0660 Fax: (954) 354-0445
POWERED BY THE INNOVATORS
ENGINEERING EXPRESS
EXPERIENCE MORE AT WWW.ENGEXP.COM

Town & Country INDUSTRIES
Wholesale Aluminum and Building Products
A Division of ABC Supply Co., Inc.
400 WEST MCNAB ROAD
FT. LAUDERDALE, FL 33309

REMARKS	DRWN	CHKD	DATE
INIT ISSUE	KL	FLB	04/25/14
REV (TDI)	RWN	TSB	06/04/14

* THIS DOCUMENT IS THE PROPERTY OF FRANK L. BENNARDO, P.E. AND SHALL NOT BE REPRODUCED IN WHOLE OR IN PART WITHOUT WRITTEN CONSENT OF FRANK L. BENNARDO, P.E. ** ALTERATIONS, ADDITIONS, HIGHLIGHTING, OR OTHER MARKINGS TO THIS DOCUMENT ARE NOT PERMITTED AND INVALIDATE OUR CERTIFICATION.
COPYRIGHT FRANK L. BENNARDO P.E.

14-1627a

SCALE: -

PAGE DESCRIPTION:
-
-