ALUMINUM STORM BARS, HEADERS AND MULLIONS

ADDENDUM INSTALLATION INSTRUCTIONS FOR MAESTROSHIELD ROLL-UP SHUTTER

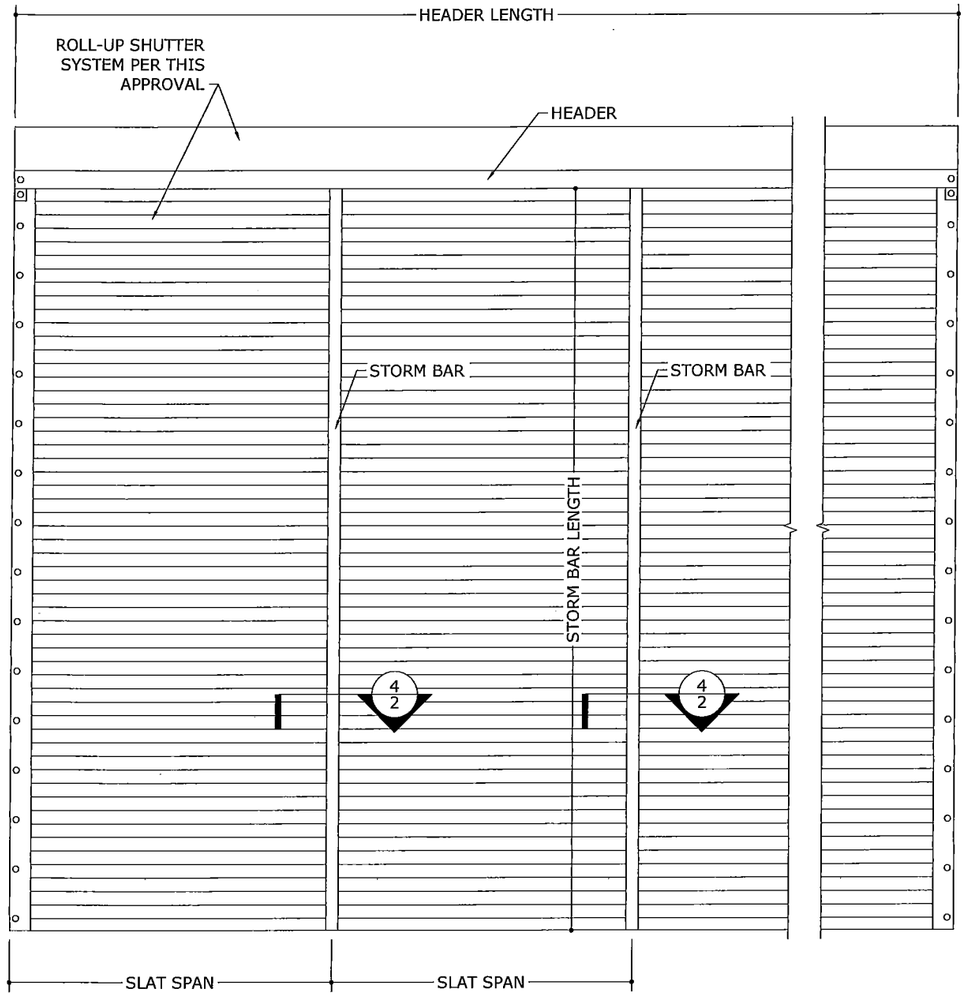

1/1 TYPICAL SHUTTER WITH STORM BARS

N.T.S. EXTERIOR ELEV

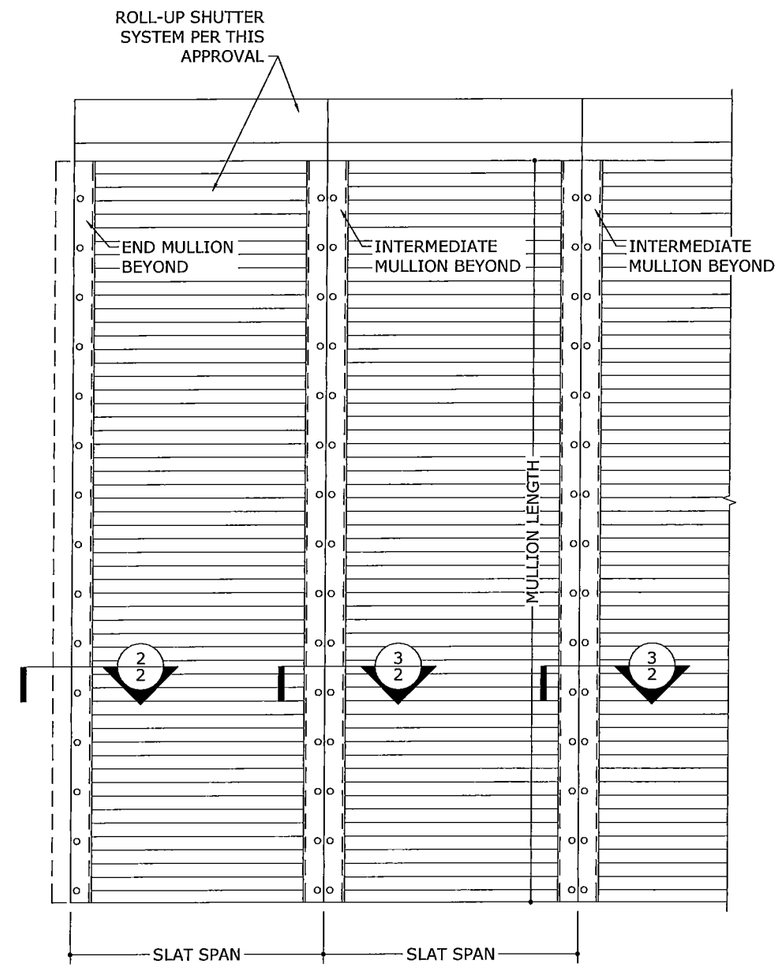

2/1 TYPICAL SHUTTER WITH MULLIONS

N.T.S. EXTERIOR ELEV

GENERAL NOTES

1. THE SYSTEM DESCRIBED HEREIN HAS BEEN DESIGNED AND TESTED IN ACCORDANCE WITH THE 2006 INTERNATIONAL BUILDING CODE WITH TEXAS REVISIONS EFFECTIVE JANUARY 1, 2008. CRITICAL STORM BARS, MULLIONS AND HEADERS SHOWN HEREIN HAVE BEEN IMPACTED TO VERIFY LARGE MISSILE IMPACT RESISTANCE.
2. NO 33-1/3% INCREASE IN ALLOWABLE STRESS HAS BEEN USED IN THE DESIGN OF THIS SYSTEM. WIND LOAD DURATION FACTOR Cd=1.6 HAS BEEN USED FOR WOOD ANCHOR DESIGN.
3. POSITIVE AND NEGATIVE DESIGN PRESSURES CALCULATED FOR USE WITH THIS SYSTEM SHALL BE DETERMINED PER SEPARATE ENGINEERING IN ACCORDANCE WITH THE GOVERNING CODE. PRESSURE REQUIREMENTS AS DETERMINED IN ACCORDANCE WITH ASCE 7 SHALL BE LESS THAN OR EQUAL TO THE POSITIVE OR NEGATIVE DESIGN PRESSURE CAPACITY VALUES LISTED HEREIN FOR ANY ASSEMBLY AS SHOWN.
4. DESIGN PRESSURES NOTED HEREIN ARE BASED ON MAXIMUM TESTED PRESSURES DIVIDED BY A 1.5 SAFETY FACTOR.
5. THE SYSTEM DETAILED HEREIN IS GENERIC AND DOES NOT PROVIDE INFORMATION FOR A SPECIFIC SITE. FOR SITE CONDITIONS DIFFERENT FROM THE CONDITIONS DETAILED HEREIN, A LICENSED ENGINEER OR REGISTERED ARCHITECT SHALL PREPARE SITE SPECIFIC DOCUMENTS FOR USE IN CONJUNCTION WITH THIS DOCUMENT. THIS CERTIFICATION IS VALID FOR USE IN CONJUNCTION WITH THE MOST CURRENT REVISION OF FLORIDA PRODUCT APPROVAL #FL14235.
6. PERMIT HOLDER SHALL VERIFY THE ADEQUACY OF THE EXISTING STRUCTURE TO WITHSTAND SUPERIMPOSED LOADS.
7. ALL EXTRUSIONS SHALL BE MINIMUM 6063-T5 ALUMINUM ALLOY, UNLESS NOTED OTHERWISE.
8. END CONNECTION DETAILS SHOWN MAY BE INTERCHANGED AS FIELD CONDITIONS DICTATE.
9. ANCHORS SHALL BE INSTALLED IN ACCORDANCE WITH MANUFACTURERS' RECOMMENDATIONS.
10. UNLESS OTHERWISE NOTED, ALL BOLTS & WASHERS SHALL BE ZINC COATED STEEL, GALVANIZED STEEL, OR STAINLESS STEEL WITH A MINIMUM TENSILE YIELD STRENGTH OF 60 KSI.
11. ALL STEEL IN CONTACT WITH ALUMINUM SHALL BE PAINTED OR PLATED AS PRESCRIBED IN THE FLORIDA BUILDING CODE.

FRANK L. BENNARDO P.E.
160 SW 12th AVENUE #106
DEERFIELD BEACH, FL 33442
Ph: (954) 354-0660 FAX: (954) 354-0665
POWERED BY THE INNOVATORS OF ENGINEERING EXPRESS
EXPERIENCE MORE AT WWW.ENGINEERINGEXPRESS.COM

FRANK L. BENNARDO P.E. LICENSE NO. #FL 14235 STATE OF FLORIDA PROFESSIONAL ENGINEER 06/05/2013

Town & Country INDUSTRIES
Wholesale Aluminum and Building Products
A Division of ABC Supply Co., Inc.
400 WEST MCNAB ROAD
FT. LAUDERDALE, FL 33309

REMARKS	DRWN	CHKD	DATE
INIT ISSUE	KL	FLB	05/30/13

THIS DOCUMENT IS THE PROPERTY OF FRANK L. BENNARDO, P.E AND SHALL NOT BE REPRODUCED IN WHOLE OR IN PART WITHOUT WRITTEN PERMISSION OF FRANK L. BENNARDO, P.E. * ALTERATIONS, ADDITIONS, MODIFICATIONS, OR OTHER MARKINGS TO THIS DOCUMENT ARE NOT PERMITTED AND INVALIDATE OUR CERTIFICATION.

COPYRIGHT FRANK L. BENNARDO P.E.

13-TCM-02b

SCALE: - 01

PAGE DESCRIPTION:
-
-

06/05/2013 - 12:22pm keithl C:\Documents and Settings\keithl\My Documents\Dropbox\Work Stuff\Town And Country Maestro TDI\13-TCM-02 Maestroshield Roll-Up (TDI)\13-TCM-02b_01a Mullion, Storm Bar, Header.dwg

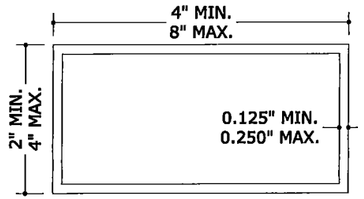

1-13 ALUMINUM TUBE

6" = 1'-0" MAT'L PER BOM

BILL OF MATERIALS		
ITEM #	DESCRIPTION	MATERIAL
1	2"x4"x0.125" TUBE	6063-T6 ALUM
2	2"x5"x0.125" TUBE	6063-T6 ALUM
3	2"x3"x0.25" TUBE	6061-T6 OR 6005-T5 ALUM
4	2"x4"x0.25" TUBE	6061-T6 OR 6005-T5 ALUM
5	2"x5"x0.25" TUBE	6061-T6 OR 6005-T5 ALUM
6	2"x6"x0.125" TUBE	6063-T6 ALUM
7	2"x6"x0.25" TUBE	6061-T6 OR 6005-T5 ALUM
8	3"x3"x0.125" TUBE	6063-T6 ALUM
9	3"x3"x0.25" TUBE	6061-T6 OR 6005-T5 ALUM
10	4"x4"x0.125" TUBE	6063-T6 ALUM
11	4"x4"x0.25" TUBE	6061-T6 OR 6005-T5 ALUM
12	4"x6"x0.25" TUBE	6061-T6 OR 6005-T5 ALUM
13	4"x8"x0.25" TUBE	6061-T6 OR 6005-T5 ALUM
14	STEEL REINFORCEMENT (Fy = 30 ksi MIN.)	A36 OR STAINLESS STEEL
15	ALUMINUM ANGLE	6061-T6 OR 6005-T5 ALUM

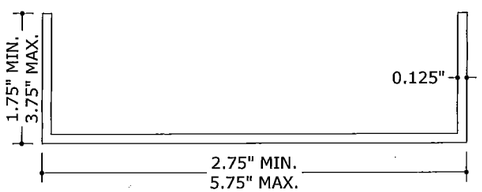

Fy = 30 ksi MINIMUM

14 STEEL REINFORCEMENT

6" = 1'-0" A36 GALV. STEEL OR STAINLESS STEEL

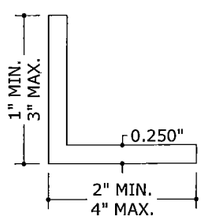

15 ALUMINUM ANGLE

6" = 1'-0" 6061-T6 OR 6005-T5 ALUM

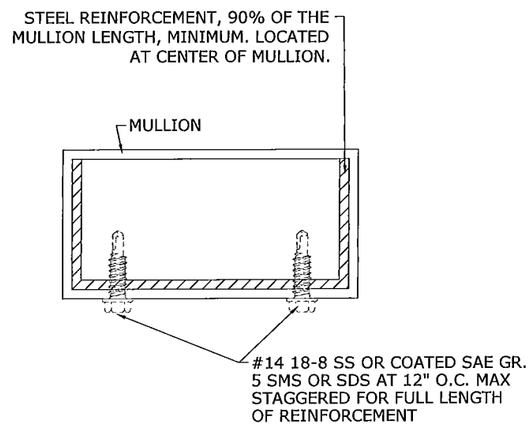

1/2 TYPICAL REINFORCEMENT

N.T.S. SECTION

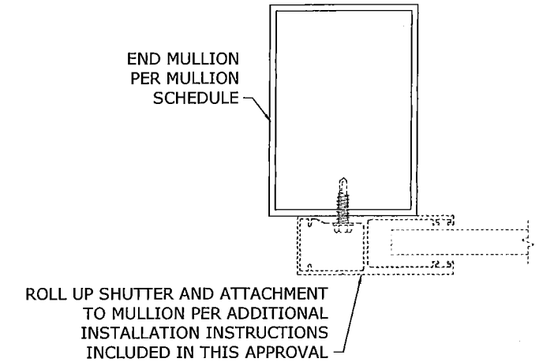

2/2 TYPICAL END MULLION

N.T.S. HORIZ SECTION

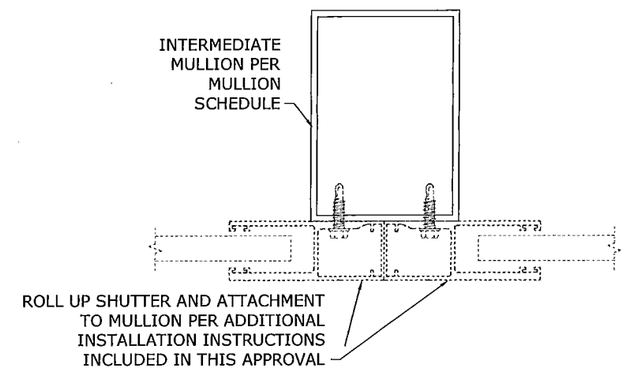

3/2 TYPICAL INTERMEDIATE MULLION

N.T.S. HORIZ SECTION

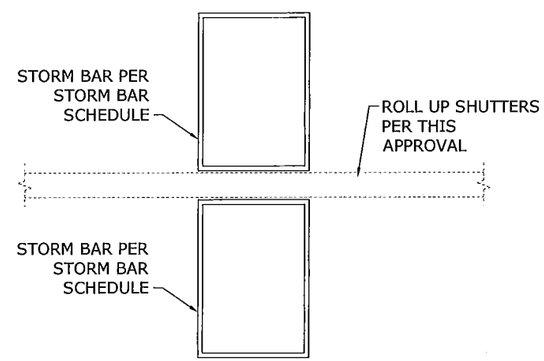

4/2 TYPICAL STORM BARS

N.T.S. HORIZ SECTION

FRANK L. BENNARDO P.E.
160 SW 12th AVENUE #106
DEERFIELD BEACH, FL 33442
Ph: (954) 354-0660 Fax: (954) 354-0443
POWERED BY THE INNOVATIONS OF ENGINEERING EXPRESS®
EXPERIENCE MORE AT WWW.ENGEXP.COM

FRANK L. BENNARDO P.E. #106 CERT OF REG. #F-17583 STATE OF FLORIDA 06/05/2013

Town & Country INDUSTRIES
Wholesale Aluminum and Building Products
A Division of ABC Supply Co., Inc.
400 WEST MCNAB ROAD
FT. LAUDERDALE, FL 33309

REMARKS	DRWN	CHKD	DATE
INIT ISSUE	KL	FLB	05/30/13

THIS DOCUMENT IS THE PROPERTY OF FRANK L. BENNARDO, P.E AND SHALL NOT BE REPRODUCED IN WHOLE OR PART WITHOUT WRITTEN CONSENT OF FRANK L. BENNARDO, P.E. ALTERATIONS, ADDITIONS, REPLICATING, OR OTHER MARKINGS TO THIS DOCUMENT ARE NOT PERMITTED AND VIOLATE STATE LAW.

COPYRIGHT FRANK L. BENNARDO P.E.

13-TCM-02b

SCALE: - 01

PAGE DESCRIPTION:
-
-

06/05/2013 - 12:22pm keithl C:\Documents and Settings\keithl\My Documents\Dropbox\Work Stuff\Town And Country Maestro TDI\13-TCM-02 Maestroshield Roll-Up (TDI)\13-TCM-02b_01a Mullion, Storm Bar, Header.dwg

STORM BAR AND MULLION SCHEDULE: 2"x2"x1/4"

STORM BAR HEIGHT	SLAT SPAN 25" DESIGN PRESSURE (PSF)	25" REACTION AT ENDS (LBS)	30" DESIGN PRESSURE (PSF)	30" REACTION AT ENDS (LBS)	35" DESIGN PRESSURE (PSF)	35" REACTION AT ENDS (LBS)	40" DESIGN PRESSURE (PSF)	40" REACTION AT ENDS (LBS)	45" DESIGN PRESSURE (PSF)	45" REACTION AT ENDS (LBS)	50" DESIGN PRESSURE (PSF)	50" REACTION AT ENDS (LBS)	55" DESIGN PRESSURE (PSF)	55" REACTION AT ENDS (LBS)	60" DESIGN PRESSURE (PSF)	60" REACTION AT ENDS (LBS)	65" DESIGN PRESSURE (PSF)	65" REACTION AT ENDS (LBS)	70" DESIGN PRESSURE (PSF)	70" REACTION AT ENDS (LBS)	75" DESIGN PRESSURE (PSF)	75" REACTION AT ENDS (LBS)	80" DESIGN PRESSURE (PSF)	80" REACTION AT ENDS (LBS)
96"	25.6	213.1																						
84"	38.2	278.3	31.8	278.3	27.3	278.3																		
72"	60.6	378.8	50.5	378.8	43.3	378.8	37.9	378.8	33.7	378.8	30.3	378.8	27.6	378.8	25.3	378.8								
60"	104.7	545.5	87.3	545.5	74.8	545.5	65.5	545.5	58.2	545.5	52.4	545.5	47.6	545.5	43.6	545.5	40.3	545.5	37.4	545.5	34.9	545.5	32.2	536.7
48"	120.0	500.0	120.0	600.0	120.0	700.0	120.0	800.0	113.7	852.4	102.3	852.4	83.1	761.8	67.3	673.0	55.2	598.0	45.7	533.2	38.2	477.5	32.2	429.3
36"	120.0	375.0	120.0	450.0	120.0	525.0	120.0	600.0	120.0	675.0	104.2	651.3	83.1	571.3	67.3	504.8	55.2	448.5	45.7	399.9	38.2	358.1	32.2	322.0
24"	120.0	250.0	120.0	300.0	120.0	350.0	120.0	400.0	120.0	450.0	104.2	434.2	83.1	380.9	67.3	336.5	55.2	299.0	45.7	266.6	38.2	238.8	32.2	214.7

STORM BAR AND MULLION SCHEDULE: 2"x4"x1/8" OR 2x3"x1/4"

MEMBER LENGTH	SLAT SPAN 25" DESIGN PRESSURE (PSF)	25" REACTION AT ENDS (LBS)	30" DESIGN PRESSURE (PSF)	30" REACTION AT ENDS (LBS)	35" DESIGN PRESSURE (PSF)	35" REACTION AT ENDS (LBS)	40" DESIGN PRESSURE (PSF)	40" REACTION AT ENDS (LBS)	45" DESIGN PRESSURE (PSF)	45" REACTION AT ENDS (LBS)	50" DESIGN PRESSURE (PSF)	50" REACTION AT ENDS (LBS)	55" DESIGN PRESSURE (PSF)	55" REACTION AT ENDS (LBS)	60" DESIGN PRESSURE (PSF)	60" REACTION AT ENDS (LBS)	65" DESIGN PRESSURE (PSF)	65" REACTION AT ENDS (LBS)	70" DESIGN PRESSURE (PSF)	70" REACTION AT ENDS (LBS)	75" DESIGN PRESSURE (PSF)	75" REACTION AT ENDS (LBS)	80" DESIGN PRESSURE (PSF)	80" REACTION AT ENDS (LBS)
120"	36.6	381.1	30.5	381.1	26.1	381.1																		
108"	50.2	470.5	41.8	470.5	35.8	470.5	31.4	470.5	27.9	470.5	25.1	470.5												
96"	71.5	595.4	59.5	595.4	51.0	595.4	44.7	595.4	39.7	595.4	35.7	595.4	32.5	595.4	29.8	595.4	27.5	595.4	25.5	595.4				
84"	106.7	777.7	88.9	777.7	76.2	777.7	66.7	777.7	59.3	777.7	53.3	777.7	48.5	777.7	44.4	777.7	41.0	777.7	38.1	777.7	35.6	777.7	32.2	751.3
72"	120.0	750.0	120.0	900.0	120.0	1050.0	105.9	1058.6	94.1	1058.6	84.7	1058.6	77.0	1058.6	67.3	1009.5	55.2	897.0	45.7	799.8	38.2	716.3	32.2	644.0
60"	120.0	625.0	120.0	750.0	120.0	875.0	120.0	1000.0	120.0	1125.0	104.2	1085.4	83.1	952.2	67.3	841.3	55.2	747.5	45.7	666.5	38.2	596.9	32.2	536.7
48"	120.0	500.0	120.0	600.0	120.0	700.0	120.0	800.0	120.0	900.0	104.2	868.3	83.1	761.8	67.3	673.0	55.2	598.0	45.7	533.2	38.2	477.5	32.2	429.3
36"	120.0	375.0	120.0	450.0	120.0	525.0	120.0	600.0	120.0	675.0	104.2	651.3	83.1	571.3	67.3	504.8	55.2	448.5	45.7	399.9	38.2	358.1	32.2	322.0

STORM BAR AND MULLION SCHEDULE: 2"x4"x1/4" OR 2"x5"x1/8"

MEMBER LENGTH	SLAT SPAN 25" DESIGN PRESSURE (PSF)	25" REACTION AT ENDS (LBS)	30" DESIGN PRESSURE (PSF)	30" REACTION AT ENDS (LBS)	35" DESIGN PRESSURE (PSF)	35" REACTION AT ENDS (LBS)	40" DESIGN PRESSURE (PSF)	40" REACTION AT ENDS (LBS)	45" DESIGN PRESSURE (PSF)	45" REACTION AT ENDS (LBS)	50" DESIGN PRESSURE (PSF)	50" REACTION AT ENDS (LBS)	55" DESIGN PRESSURE (PSF)	55" REACTION AT ENDS (LBS)	60" DESIGN PRESSURE (PSF)	60" REACTION AT ENDS (LBS)	65" DESIGN PRESSURE (PSF)	65" REACTION AT ENDS (LBS)	70" DESIGN PRESSURE (PSF)	70" REACTION AT ENDS (LBS)	75" DESIGN PRESSURE (PSF)	75" REACTION AT ENDS (LBS)	80" DESIGN PRESSURE (PSF)	80" REACTION AT ENDS (LBS)
120"	74.8	778.7	62.3	778.7	53.4	778.7	46.7	778.7	41.5	778.7	37.4	778.7	34.0	778.7	31.1	778.7	28.8	778.7	26.7	778.7				
108"	102.5	961.3	85.5	961.3	73.2	961.3	64.1	961.3	57.0	961.3	51.3	961.3	46.6	961.3	42.7	961.3	39.4	961.3	36.6	961.3	34.2	961.3	32.0	961.3
96"	120.0	1000.0	120.0	1200.0	104.3	1216.7	91.3	1216.7	81.1	1216.7	73.0	1216.7	66.4	1216.7	60.8	1216.7	55.2	1196.0	45.7	1066.3	38.2	955.0	32.2	858.7
84"	120.0	875.0	120.0	1050.0	120.0	1225.0	120.0	1400.0	112.3	1473.5	101.0	1473.5	83.1	1333.1	67.3	1177.8	55.2	1046.5	45.7	933.0	38.2	835.6	32.2	751.3
72"	120.0	750.0	120.0	900.0	120.0	1050.0	120.0	1200.0	120.0	1350.0	104.2	1302.5	83.1	1142.6	67.3	1009.5	55.2	897.0	45.7	799.8	38.2	716.3	32.2	644.0
60"	120.0	625.0	120.0	750.0	120.0	875.0	120.0	1000.0	120.0	1125.0	104.2	1085.4	83.1	952.2	67.3	841.3	55.2	747.5	45.7	666.5	38.2	596.9	32.2	536.7
48"	120.0	500.0	120.0	600.0	120.0	700.0	120.0	800.0	120.0	900.0	104.2	868.3	83.1	761.8	67.3	673.0	55.2	598.0	45.7	533.2	38.2	477.5	32.2	429.3
36"	120.0	375.0	120.0	450.0	120.0	525.0	120.0	600.0	120.0	675.0	104.2	651.3	83.1	571.3	67.3	504.8	55.2	448.5	45.7	399.9	38.2	358.1	32.2	322.0

STORM BAR AND MULLION SCHEDULE: 2"x5"x1/4"

MEMBER LENGTH	SLAT SPAN 25" DESIGN PRESSURE (PSF)	25" REACTION AT ENDS (LBS)	30" DESIGN PRESSURE (PSF)	30" REACTION AT ENDS (LBS)	35" DESIGN PRESSURE (PSF)	35" REACTION AT ENDS (LBS)	40" DESIGN PRESSURE (PSF)	40" REACTION AT ENDS (LBS)	45" DESIGN PRESSURE (PSF)	45" REACTION AT ENDS (LBS)	50" DESIGN PRESSURE (PSF)	50" REACTION AT ENDS (LBS)	55" DESIGN PRESSURE (PSF)	55" REACTION AT ENDS (LBS)	60" DESIGN PRESSURE (PSF)	60" REACTION AT ENDS (LBS)	65" DESIGN PRESSURE (PSF)	65" REACTION AT ENDS (LBS)	70" DESIGN PRESSURE (PSF)	70" REACTION AT ENDS (LBS)	75" DESIGN PRESSURE (PSF)	75" REACTION AT ENDS (LBS)	80" DESIGN PRESSURE (PSF)	80" REACTION AT ENDS (LBS)
120"	120.0	1250.0	113.0	1412.9	96.9	1412.9	84.8	1412.9	75.4	1412.9	67.8	1412.9	61.7	1412.9	56.5	1412.9	52.2	1412.9	45.7	1332.9	38.2	1193.8	32.2	1073.3
108"	120.0	1125.0	120.0	1350.0	120.0	1575.0	116.3	1744.3	103.4	1744.3	93.0	1744.3	83.1	1713.9	67.3	1514.3	55.2	1345.5	45.7	1199.6	38.2	1074.4	32.2	966.0
96"	120.0	1000.0	120.0	1200.0	120.0	1400.0	120.0	1600.0	120.0	1800.0	104.2	1736.7	83.1	1523.5	67.3	1346.0	55.2	1196.0	45.7	1066.3	38.2	955.0	32.2	858.7
84"	120.0	875.0	120.0	1050.0	120.0	1225.0	120.0	1400.0	120.0	1575.0	104.2	1519.6	83.1	1333.1	67.3	1177.8	55.2	1046.5	45.7	933.0	38.2	835.6	32.2	751.3
72"	120.0	750.0	120.0	900.0	120.0	1050.0	120.0	1200.0	120.0	1350.0	104.2	1302.5	83.1	1142.6	67.3	1009.5	55.2	897.0	45.7	799.8	38.2	716.3	32.2	644.0
60"	120.0	625.0	120.0	750.0	120.0	875.0	120.0	1000.0	120.0	1125.0	104.2	1085.4	83.1	952.2	67.3	841.3	55.2	747.5	45.7	666.5	38.2	596.9	32.2	536.7
48"	120.0	500.0	120.0	600.0	120.0	700.0	120.0	800.0	120.0	900.0	104.2	868.3	83.1	761.8	67.3	673.0	55.2	598.0	45.7	533.2	38.2	477.5	32.2	429.3
36"	120.0	375.0	120.0	450.0	120.0	525.0	120.0	600.0	120.0	675.0	104.2	651.3	83.1	571.3	67.3	504.8	55.2	448.5	45.7	399.9	38.2	358.1	32.2	322.0

SEE SHEET 7 FOR STORM BAR AND MULLION SCHEDULE NOTES.

FRANK L. BENNARDO, P.E.
160 SW 12th AVENUE
DEERFIELD BEACH, FL 33442
PH: (954) 354-0660 FAX: (954) 354-0443
POWERED BY THE INNOVATIONS OF ENGINEERING EXPRESS
EXPERIENCE MORE AT WWW.ENGEXP.COM

Town & Country INDUSTRIES
Wholesale Aluminum and Building Products
A Division of ABC Supply Co., Inc.
400 WEST MCNAB ROAD
FT. LAUDERDALE, FL 33309

REMARKS	DRWN	CHKD	DATE
INIT ISSUE	KL	FLB	05/30/13

COPYRIGHT FRANK L. BENNARDO P.E.

13-TCM-02b

SCALE: - 01

PAGE DESCRIPTION:
-
-

C:\Documents and Settings\keithl\My Documents\Dropbox\Work Stuff\Town And Country Maestro TDI\13-TCM-02 Maestroshield Roll-Up (TDI)\13-TCM-02b_01a Mullion, Storm Bar, Header.dwg
06/05/2013 - 12:22pm keithl

STORM BAR AND MULLION SCHEDULE: 2"x6"x1/8"

MEMBER LENGTH	SLAT SPAN 25" DESIGN PRESSURE (PSF)	25" REACTION AT ENDS (LBS)	30" DESIGN PRESSURE (PSF)	30" REACTION AT ENDS (LBS)	35" DESIGN PRESSURE (PSF)	35" REACTION AT ENDS (LBS)	40" DESIGN PRESSURE (PSF)	40" REACTION AT ENDS (LBS)	45" DESIGN PRESSURE (PSF)	45" REACTION AT ENDS (LBS)	50" DESIGN PRESSURE (PSF)	50" REACTION AT ENDS (LBS)	55" DESIGN PRESSURE (PSF)	55" REACTION AT ENDS (LBS)	60" DESIGN PRESSURE (PSF)	60" REACTION AT ENDS (LBS)	65" DESIGN PRESSURE (PSF)	65" REACTION AT ENDS (LBS)	70" DESIGN PRESSURE (PSF)	70" REACTION AT ENDS (LBS)	75" DESIGN PRESSURE (PSF)	75" REACTION AT ENDS (LBS)	80" DESIGN PRESSURE (PSF)	80" REACTION AT ENDS (LBS)
120"	118.9	1238.3	99.1	1238.3	84.9	1238.3	74.3	1238.3	66.0	1238.3	59.4	1238.3	54.0	1238.3	49.5	1238.3	45.7	1238.3	42.5	1238.3	38.2	1193.8	32.2	1073.3
108"	120.0	1125.0	120.0	1350.0	113.1	1484.0	98.9	1484.0	87.9	1484.0	79.1	1484.0	72.0	1484.0	66.0	1484.0	55.2	1345.5	45.7	1199.6	38.2	1074.4	32.2	966.0
96"	120.0	1000.0	120.0	1200.0	120.0	1400.0	120.0	1600.0	112.3	1684.1	101.0	1684.1	83.1	1523.5	67.3	1346.0	55.2	1196.0	45.7	1066.3	38.2	955.0	32.2	858.7
84"	120.0	875.0	120.0	1050.0	120.0	1225.0	120.0	1400.0	120.0	1575.0	104.2	1519.6	83.1	1333.1	67.3	1177.8	55.2	1046.5	45.7	933.0	38.2	835.6	32.2	751.3
72"	120.0	750.0	120.0	900.0	120.0	1050.0	120.0	1200.0	120.0	1350.0	104.2	1302.5	83.1	1142.6	67.3	1009.5	55.2	897.0	45.7	799.8	38.2	716.3	32.2	644.0
60"	120.0	625.0	120.0	750.0	120.0	875.0	120.0	1000.0	120.0	1125.0	104.2	1085.4	83.1	952.2	67.3	841.3	55.2	747.5	45.7	666.5	38.2	596.9	32.2	536.7
48"	120.0	500.0	120.0	600.0	120.0	700.0	120.0	800.0	120.0	900.0	104.2	868.3	83.1	761.8	67.3	673.0	55.2	598.0	45.7	533.2	38.2	477.5	32.2	429.3

STORM BAR AND MULLION SCHEDULE: 2"x6"x1/4"

MEMBER LENGTH	SLAT SPAN 25" DESIGN PRESSURE (PSF)	25" REACTION AT ENDS (LBS)	30" DESIGN PRESSURE (PSF)	30" REACTION AT ENDS (LBS)	35" DESIGN PRESSURE (PSF)	35" REACTION AT ENDS (LBS)	40" DESIGN PRESSURE (PSF)	40" REACTION AT ENDS (LBS)	45" DESIGN PRESSURE (PSF)	45" REACTION AT ENDS (LBS)	50" DESIGN PRESSURE (PSF)	50" REACTION AT ENDS (LBS)	55" DESIGN PRESSURE (PSF)	55" REACTION AT ENDS (LBS)	60" DESIGN PRESSURE (PSF)	60" REACTION AT ENDS (LBS)	65" DESIGN PRESSURE (PSF)	65" REACTION AT ENDS (LBS)	70" DESIGN PRESSURE (PSF)	70" REACTION AT ENDS (LBS)	75" DESIGN PRESSURE (PSF)	75" REACTION AT ENDS (LBS)	80" DESIGN PRESSURE (PSF)	80" REACTION AT ENDS (LBS)
228"	31.8	630.1	26.5	630.1																				
216"	37.4	702.1	31.2	702.1	26.7	702.1																		
204"	44.5	787.1	37.0	787.1	31.8	787.1	27.8	787.1																
192"	53.3	888.6	44.4	888.6	38.1	888.6	33.3	888.6	29.6	888.6	26.7	888.6												
180"	64.7	1011.0	53.9	1011.0	46.2	1011.0	40.4	1011.0	35.9	1011.0	32.4	1011.0	29.4	1011.0	27.0	1011.0								
168"	79.6	1160.6	66.3	1160.6	56.8	1160.6	49.7	1160.6	44.2	1160.6	39.8	1160.6	36.2	1160.6	33.2	1160.6	30.6	1160.6	28.4	1160.6	26.5	1160.6		
156"	99.4	1346.1	82.8	1346.1	71.0	1346.1	62.1	1346.1	55.2	1346.1	49.7	1346.1	45.2	1346.1	41.4	1346.1	38.2	1346.1	35.5	1346.1	33.1	1346.1	31.1	1346.1
144"	120.0	1500.0	105.3	1579.7	90.3	1579.7	79.0	1579.7	70.2	1579.7	63.2	1579.7	57.4	1579.7	52.7	1579.7	48.6	1579.7	45.1	1579.7	38.2	1432.5	32.2	1288.0
132"	120.0	1375.0	120.0	1650.0	117.2	1880.0	102.5	1880.0	91.2	1880.0	82.0	1880.0	74.6	1880.0	67.3	1850.8	55.2	1644.5	45.7	1466.2	38.2	1313.1	32.2	1180.7
120"	120.0	1250.0	120.0	1500.0	120.0	1750.0	120.0	2000.0	120.0	2250.0	104.2	2170.8	83.1	1904.4	67.3	1682.5	55.2	1495.0	45.7	1332.9	38.2	1193.8	32.2	1073.3
108"	120.0	1125.0	120.0	1350.0	120.0	1575.0	120.0	1800.0	120.0	2025.0	104.2	1953.8	83.1	1713.9	67.3	1514.3	55.2	1345.5	45.7	1199.6	38.2	1074.4	32.2	966.0
96"	120.0	1000.0	120.0	1200.0	120.0	1400.0	120.0	1600.0	120.0	1800.0	104.2	1736.7	83.1	1523.5	67.3	1346.0	55.2	1196.0	45.7	1066.3	38.2	955.0	32.2	858.7

STORM BAR AND MULLION SCHEDULE: 3"x3"x1/8"

MEMBER LENGTH	SLAT SPAN 25" DESIGN PRESSURE (PSF)	25" REACTION AT ENDS (LBS)	30" DESIGN PRESSURE (PSF)	30" REACTION AT ENDS (LBS)	35" DESIGN PRESSURE (PSF)	35" REACTION AT ENDS (LBS)	40" DESIGN PRESSURE (PSF)	40" REACTION AT ENDS (LBS)	45" DESIGN PRESSURE (PSF)	45" REACTION AT ENDS (LBS)	50" DESIGN PRESSURE (PSF)	50" REACTION AT ENDS (LBS)	55" DESIGN PRESSURE (PSF)	55" REACTION AT ENDS (LBS)	60" DESIGN PRESSURE (PSF)	60" REACTION AT ENDS (LBS)	65" DESIGN PRESSURE (PSF)	65" REACTION AT ENDS (LBS)	70" DESIGN PRESSURE (PSF)	70" REACTION AT ENDS (LBS)	75" DESIGN PRESSURE (PSF)	75" REACTION AT ENDS (LBS)	80" DESIGN PRESSURE (PSF)	80" REACTION AT ENDS (LBS)
120"	28.5	296.9																						
108"	39.1	366.5	32.6	366.5	27.9	366.5																		
96"	55.7	463.9	46.4	463.9	39.8	463.9	34.8	463.9	30.9	463.9	27.8	463.9	25.3	463.9										
84"	83.1	605.9	69.2	605.9	59.3	605.9	51.9	605.9	46.2	605.9	41.5	605.9	37.8	605.9	34.6	605.9	32.0	605.9	29.7	605.9	27.7	605.9	26.0	605.9
72"	120.0	750.0	110.0	824.6	94.2	824.6	82.5	824.6	73.3	824.6	66.0	824.6	60.0	824.6	55.0	824.6	50.7	824.6	45.7	799.8	38.2	716.3	32.2	644.0
60"	120.0	625.0	120.0	750.0	120.0	875.0	120.0	1000.0	120.0	1125.0	104.2	1085.4	83.1	952.2	67.3	841.3	55.2	747.5	45.7	666.5	38.2	596.9	32.2	536.7
48"	120.0	500.0	120.0	600.0	120.0	700.0	120.0	800.0	120.0	900.0	104.2	868.3	83.1	761.8	67.3	673.0	55.2	598.0	45.7	533.2	38.2	477.5	32.2	429.3

STORM BAR AND MULLION SCHEDULE: 3"x3"x1/4"

MEMBER LENGTH	SLAT SPAN 25" DESIGN PRESSURE (PSF)	25" REACTION AT ENDS (LBS)	30" DESIGN PRESSURE (PSF)	30" REACTION AT ENDS (LBS)	35" DESIGN PRESSURE (PSF)	35" REACTION AT ENDS (LBS)	40" DESIGN PRESSURE (PSF)	40" REACTION AT ENDS (LBS)	45" DESIGN PRESSURE (PSF)	45" REACTION AT ENDS (LBS)	50" DESIGN PRESSURE (PSF)	50" REACTION AT ENDS (LBS)	55" DESIGN PRESSURE (PSF)	55" REACTION AT ENDS (LBS)	60" DESIGN PRESSURE (PSF)	60" REACTION AT ENDS (LBS)	65" DESIGN PRESSURE (PSF)	65" REACTION AT ENDS (LBS)	70" DESIGN PRESSURE (PSF)	70" REACTION AT ENDS (LBS)	75" DESIGN PRESSURE (PSF)	75" REACTION AT ENDS (LBS)	80" DESIGN PRESSURE (PSF)	80" REACTION AT ENDS (LBS)
120"	50.2	522.9	41.8	522.9	35.9	522.9	31.4	522.9	27.9	522.9	25.1	522.9												
108"	68.9	645.6	57.4	645.6	49.2	645.6	43.0	645.6	38.3	645.6	34.4	645.6	31.3	645.6	28.7	645.6	26.5	645.6						
96"	98.0	817.1	81.7	817.1	70.0	817.1	61.3	817.1	54.5	817.1	49.0	817.1	44.6	817.1	40.9	817.1	37.7	817.1	35.0	817.1	32.7	817.1	30.6	817.1
84"	120.0	875.0	120.0	1050.0	104.5	1067.2	91.5	1067.2	81.3	1067.2	73.2	1067.2	66.5	1067.2	61.0	1067.2	55.2	1046.5	45.7	933.0	38.2	835.6	32.2	751.3
72"	120.0	750.0	120.0	900.0	120.0	1050.0	120.0	1200.0	120.0	1350.0	104.2	1302.5	83.1	1142.6	67.3	1009.5	55.2	897.0	45.7	799.8	38.2	716.3	32.2	644.0
60"	120.0	625.0	120.0	750.0	120.0	875.0	120.0	1000.0	120.0	1125.0	104.2	1085.4	83.1	952.2	67.3	841.3	55.2	747.5	45.7	666.5	38.2	596.9	32.2	536.7
48"	120.0	500.0	120.0	600.0	120.0	700.0	120.0	800.0	120.0	900.0	104.2	868.3	83.1	761.8	67.3	673.0	55.2	598.0	45.7	533.2	38.2	477.5	32.2	429.3

SEE SHEET 7 FOR STORM BAR AND MULLION SCHEDULE NOTES.

FRANK L. BENNARDO, P.E.
160 SW 12th AVENUE, #106
DEERFIELD BEACH, FL 33442
PH: (954) 354-0660 FAX: (954) 354-0443
CERT. OF REG. #: 29296

POWERED BY THE INNOVATIONS OF ENGINEERING EXPRESS® EXPERIENCE MORE AT WWW.ENGEXP.COM

Town & Country INDUSTRIES
Wholesale Aluminum and Building Products
A Division of ABC Supply Co., Inc.
400 WEST MCNAB ROAD
FT. LAUDERDALE, FL 33309

REMARKS	DRWN	CHKD	DATE
INIT ISSUE	KL	FLB	05/30/13

THIS DOCUMENT IS THE PROPERTY OF FRANK L. BENNARDO, P.E. AND SHALL NOT BE REPRODUCED IN WHOLE OR PART WITHOUT WRITTEN CONSENT OF FRANK L. BENNARDO, P.E. ALTERATIONS, MODIFICATIONS, OR OTHER MARKINGS TO THIS DOCUMENT ARE NOT PERMITTED AND INVALIDATE OUR CERTIFICATION.

COPYRIGHT FRANK L. BENNARDO P.E.

13-TCM-02b

SCALE: - 01

PAGE DESCRIPTION:

C:\Documents and Settings\keith\My Documents\Dropbox\Work Stuff\Town And Country Maestro TD\13-TCM-02 Maestroshield Roll-Up (TD)\13-TCM-02b_01a Mullion, Storm Bar, Header.dwg
06/05/2013 - 12:22pm keithl

STORM BAR AND MULLION SCHEDULE: 4"x4"x1/8"

MEMBER LENGTH	SLAT SPAN 25" DESIGN PRESSURE (PSF)	25" REACTION AT ENDS (LBS)	30" DESIGN PRESSURE (PSF)	30" REACTION AT ENDS (LBS)	35" DESIGN PRESSURE (PSF)	35" REACTION AT ENDS (LBS)	40" DESIGN PRESSURE (PSF)	40" REACTION AT ENDS (LBS)	45" DESIGN PRESSURE (PSF)	45" REACTION AT ENDS (LBS)	50" DESIGN PRESSURE (PSF)	50" REACTION AT ENDS (LBS)	55" DESIGN PRESSURE (PSF)	55" REACTION AT ENDS (LBS)	60" DESIGN PRESSURE (PSF)	60" REACTION AT ENDS (LBS)	65" DESIGN PRESSURE (PSF)	65" REACTION AT ENDS (LBS)	70" DESIGN PRESSURE (PSF)	70" REACTION AT ENDS (LBS)	75" DESIGN PRESSURE (PSF)	75" REACTION AT ENDS (LBS)	80" DESIGN PRESSURE (PSF)	80" REACTION AT ENDS (LBS)
120"	69.7	726.3	58.1	726.3	49.8	726.3	43.6	726.3	38.7	726.3	34.9	726.3	31.7	726.3	29.1	726.3	26.8	726.3						
108"	95.6	896.6	79.7	896.6	68.3	896.6	59.8	896.6	53.1	896.6	47.8	896.6	43.5	896.6	39.9	896.6	36.8	896.6	34.2	896.6	31.9	896.6	29.9	896.6
96"	120.0	1000.0	113.5	1134.8	97.3	1134.8	85.1	1134.8	75.7	1134.8	68.1	1134.8	61.9	1134.8	56.7	1134.8	52.4	1134.8	45.7	1066.3	38.2	955.0	32.2	858.7
84"	120.0	875.0	120.0	1050.0	120.0	1225.0	120.0	1400.0	112.9	1482.2	101.6	1482.2	83.1	1333.1	67.3	1177.8	55.2	1046.5	45.7	933.0	38.2	835.6	32.2	751.3
72"	120.0	750.0	120.0	900.0	120.0	1050.0	120.0	1200.0	120.0	1350.0	104.2	1302.5	83.1	1142.6	67.3	1009.5	55.2	897.0	45.7	799.8	38.2	716.3	32.2	644.0
60"	120.0	625.0	120.0	750.0	120.0	875.0	120.0	1000.0	120.0	1125.0	104.2	1085.4	83.1	952.2	67.3	841.3	55.2	747.5	45.7	666.5	38.2	596.9	32.2	536.7
48"	120.0	500.0	120.0	600.0	120.0	700.0	120.0	800.0	120.0	900.0	104.2	868.3	83.1	761.8	67.3	673.0	55.2	598.0	45.7	533.2	38.2	477.5	32.2	429.3
36"	120.0	375.0	120.0	450.0	120.0	525.0	120.0	600.0	120.0	675.0	104.2	651.3	83.1	571.3	67.3	504.8	55.2	448.5	45.7	399.9	38.2	358.1	32.2	322.0

STORM BAR AND MULLION SCHEDULE: 4"x4"x1/4"

MEMBER LENGTH	SLAT SPAN 25" DESIGN PRESSURE (PSF)	25" REACTION AT ENDS (LBS)	30" DESIGN PRESSURE (PSF)	30" REACTION AT ENDS (LBS)	35" DESIGN PRESSURE (PSF)	35" REACTION AT ENDS (LBS)	40" DESIGN PRESSURE (PSF)	40" REACTION AT ENDS (LBS)	45" DESIGN PRESSURE (PSF)	45" REACTION AT ENDS (LBS)	50" DESIGN PRESSURE (PSF)	50" REACTION AT ENDS (LBS)	55" DESIGN PRESSURE (PSF)	55" REACTION AT ENDS (LBS)	60" DESIGN PRESSURE (PSF)	60" REACTION AT ENDS (LBS)	65" DESIGN PRESSURE (PSF)	65" REACTION AT ENDS (LBS)	70" DESIGN PRESSURE (PSF)	70" REACTION AT ENDS (LBS)	75" DESIGN PRESSURE (PSF)	75" REACTION AT ENDS (LBS)	80" DESIGN PRESSURE (PSF)	80" REACTION AT ENDS (LBS)
120"	120.0	1250.0	105.7	1320.9	90.6	1320.9	79.3	1320.9	70.5	1320.9	63.4	1320.9	57.6	1320.9	52.8	1320.9	48.8	1320.9	45.3	1320.9	38.2	1193.8	32.2	1073.3
108"	120.0	1125.0	120.0	1350.0	120.0	1575.0	108.7	1630.8	96.6	1630.8	87.0	1630.8	79.1	1630.8	67.3	1514.3	55.2	1345.5	45.7	1199.6	38.2	1074.4	32.2	966.0
96"	120.0	1000.0	120.0	1200.0	120.0	1400.0	120.0	1600.0	120.0	1800.0	104.2	1736.7	83.1	1523.5	67.3	1346.0	55.2	1196.0	45.7	1066.3	38.2	955.0	32.2	858.7
84"	120.0	875.0	120.0	1050.0	120.0	1225.0	120.0	1400.0	120.0	1575.0	104.2	1519.6	83.1	1333.1	67.3	1177.8	55.2	1046.5	45.7	933.0	38.2	835.6	32.2	751.3
72"	120.0	750.0	120.0	900.0	120.0	1050.0	120.0	1200.0	120.0	1350.0	104.2	1302.5	83.1	1142.6	67.3	1009.5	55.2	897.0	45.7	799.8	38.2	716.3	32.2	644.0
60"	120.0	625.0	120.0	750.0	120.0	875.0	120.0	1000.0	120.0	1125.0	104.2	1085.4	83.1	952.2	67.3	841.3	55.2	747.5	45.7	666.5	38.2	596.9	32.2	536.7
48"	120.0	500.0	120.0	600.0	120.0	700.0	120.0	800.0	120.0	900.0	104.2	868.3	83.1	761.8	67.3	673.0	55.2	598.0	45.7	533.2	38.2	477.5	32.2	429.3

STORM BAR AND MULLION SCHEDULE: 4"x6"x1/4"

MEMBER LENGTH	SLAT SPAN 25" DESIGN PRESSURE (PSF)	25" REACTION AT ENDS (LBS)	30" DESIGN PRESSURE (PSF)	30" REACTION AT ENDS (LBS)	35" DESIGN PRESSURE (PSF)	35" REACTION AT ENDS (LBS)	40" DESIGN PRESSURE (PSF)	40" REACTION AT ENDS (LBS)	45" DESIGN PRESSURE (PSF)	45" REACTION AT ENDS (LBS)	50" DESIGN PRESSURE (PSF)	50" REACTION AT ENDS (LBS)	55" DESIGN PRESSURE (PSF)	55" REACTION AT ENDS (LBS)	60" DESIGN PRESSURE (PSF)	60" REACTION AT ENDS (LBS)	65" DESIGN PRESSURE (PSF)	65" REACTION AT ENDS (LBS)	70" DESIGN PRESSURE (PSF)	70" REACTION AT ENDS (LBS)	75" DESIGN PRESSURE (PSF)	75" REACTION AT ENDS (LBS)	80" DESIGN PRESSURE (PSF)	80" REACTION AT ENDS (LBS)
228"	49.2	973.0	41.0	973.0	35.1	973.0	30.7	973.0	27.3	973.0														
216"	57.8	1084.1	48.2	1084.1	41.3	1084.1	36.1	1084.1	32.1	1084.1	28.9	1084.1	26.3	1084.1										
204"	68.6	1215.4	57.2	1215.4	49.0	1215.4	42.9	1215.4	38.1	1215.4	34.3	1215.4	31.2	1215.4	28.6	1215.4	26.4	1215.4						
192"	82.3	1372.0	68.6	1372.0	58.8	1372.0	51.5	1372.0	45.7	1372.0	41.2	1372.0	37.4	1372.0	34.3	1372.0	31.7	1372.0	29.4	1372.0	27.4	1372.0	25.7	1372.0
180"	99.9	1561.1	83.3	1561.1	71.4	1561.1	62.4	1561.1	55.5	1561.1	50.0	1561.1	45.4	1561.1	41.6	1561.1	38.4	1561.1	35.7	1561.1	33.3	1561.1	31.2	1561.1
168"	120.0	1750.0	102.4	1792.0	87.8	1792.0	76.8	1792.0	68.3	1792.0	61.4	1792.0	55.9	1792.0	51.2	1792.0	47.3	1792.0	43.9	1792.0	38.2	1671.3	32.2	1502.7
156"	120.0	1625.0	120.0	1950.0	109.6	2078.3	95.9	2078.3	85.3	2078.3	76.7	2078.3	69.8	2078.3	63.9	2078.3	55.2	1943.5	45.7	1732.8	38.2	1551.9	32.2	1395.3
144"	120.0	1500.0	120.0	1800.0	120.0	2100.0	120.0	2400.0	108.4	2439.2	97.6	2439.2	83.1	2285.3	67.3	2019.0	55.2	1794.0	45.7	1599.5	38.2	1432.5	32.2	1288.0
132"	120.0	1375.0	120.0	1650.0	120.0	1925.0	120.0	2200.0	120.0	2475.0	104.2	2387.9	83.1	2094.8	67.3	1850.8	55.2	1644.5	45.7	1466.2	38.2	1313.1	32.2	1180.7
120"	120.0	1250.0	120.0	1500.0	120.0	1750.0	120.0	2000.0	120.0	2250.0	104.2	2170.8	83.1	1904.4	67.3	1682.5	55.2	1495.0	45.7	1332.9	38.2	1193.8	32.2	1073.3
108"	120.0	1125.0	120.0	1350.0	120.0	1575.0	120.0	1800.0	120.0	2025.0	104.2	1953.8	83.1	1713.9	67.3	1514.3	55.2	1345.5	45.7	1199.6	38.2	1074.4	32.2	966.0
96"	120.0	1000.0	120.0	1200.0	120.0	1400.0	120.0	1600.0	120.0	1800.0	104.2	1736.7	83.1	1523.5	67.3	1346.0	55.2	1196.0	45.7	1066.3	38.2	955.0	32.2	858.7
84"	120.0	875.0	120.0	1050.0	120.0	1225.0	120.0	1400.0	120.0	1575.0	104.2	1519.6	83.1	1333.1	67.3	1177.8	55.2	1046.5	45.7	933.0	38.2	835.6	32.2	751.3
72"	120.0	750.0	120.0	900.0	120.0	1050.0	120.0	1200.0	120.0	1350.0	104.2	1302.5	83.1	1142.6	67.3	1009.5	55.2	897.0	45.7	799.8	38.2	716.3	32.2	644.0
60"	120.0	625.0	120.0	750.0	120.0	875.0	120.0	1000.0	120.0	1125.0	104.2	1085.4	83.1	952.2	67.3	841.3	55.2	747.5	45.7	666.5	38.2	596.9	32.2	536.7
48"	120.0	500.0	120.0	600.0	120.0	700.0	120.0	800.0	120.0	900.0	104.2	868.3	83.1	761.8	67.3	673.0	55.2	598.0	45.7	533.2	38.2	477.5	32.2	429.3
36"	120.0	375.0	120.0	450.0	120.0	525.0	120.0	600.0	120.0	675.0	104.2	651.3	83.1	571.3	67.3	504.8	55.2	448.5	45.7	399.9	38.2	358.1	32.2	322.0

SEE SHEET 7 FOR STORM BAR AND MULLION SCHEDULE NOTES.

FRANK L. BENNARDO, P.E.
160 SW 12th AVENUE, #106
DEERFIELD BEACH, FL 33442
PH: (954) 354-0660 FAX: (954) 354-0443

POWERED BY THE INNOVATION OF ENGINEERING EXPRESS®
EXPERIENCE MORE AT WWW.ENGEXP.COM

Town & Country INDUSTRIES
Wholesale Aluminum and Building Products
A Division of ABC Supply Co., Inc.
400 WEST MCNAB ROAD
FT. LAUDERDALE, FL 33309

REMARKS	DRWN	CHKD	DATE
INIT ISSUE	KL	FLB	05/30/13

THIS DOCUMENT IS THE PROPERTY OF FRANK L. BENNARDO, P.E. AND SHALL NOT BE REPRODUCED IN WHOLE OR PART WITHOUT WRITTEN CONSENT OF FRANK L. BENNARDO, P.E. ALTERATIONS, ADDITIONS, HIGHLIGHTING, OR OTHER MARKINGS TO THIS DOCUMENT ARE NOT PERMITTED AND INVALIDATE OUR CERTIFICATION.

COPYRIGHT FRANK L. BENNARDO P.E.

13-TCM-02b
SCALE: - 01
PAGE DESCRIPTION:

C:\Documents and Settings\keithl\My Documents\Dropbox\Work Stuff\Town And Country Maestro TD\13-TCM-02 Maestroshield Roll-Up (TD)\13-TCM-02b_01a Mullion, Storm Bar, Header.dwg
08/05/2013 - 12:22pm keithl

C:\Documents and Settings\keith\My Documents\Dropbox\Work Stuff\Town And Country Maestro TDI\13-TCM-02 Maestroshield Roll-Up (TDI)\13-TCM-02b_01a Mullion, Storm Bar, Header.dwg
06/05/2013 - 12:22pm keith

STORM BAR AND MULLION SCHEDULE: 4"x8"x1/4"

MEMBER LENGTH	SLAT SPAN 25" DESIGN PRESSURE (PSF)	25" REACTION AT ENDS (LBS)	30" DESIGN PRESSURE (PSF)	30" REACTION AT ENDS (LBS)	35" DESIGN PRESSURE (PSF)	35" REACTION AT ENDS (LBS)	40" DESIGN PRESSURE (PSF)	40" REACTION AT ENDS (LBS)	45" DESIGN PRESSURE (PSF)	45" REACTION AT ENDS (LBS)	50" DESIGN PRESSURE (PSF)	50" REACTION AT ENDS (LBS)	55" DESIGN PRESSURE (PSF)	55" REACTION AT ENDS (LBS)	60" DESIGN PRESSURE (PSF)	60" REACTION AT ENDS (LBS)	65" DESIGN PRESSURE (PSF)	65" REACTION AT ENDS (LBS)	70" DESIGN PRESSURE (PSF)	70" REACTION AT ENDS (LBS)	75" DESIGN PRESSURE (PSF)	75" REACTION AT ENDS (LBS)	80" DESIGN PRESSURE (PSF)	80" REACTION AT ENDS (LBS)
228"	99.7	1973.8	83.1	1973.8	71.2	1973.8	62.3	1973.8	55.4	1973.8	49.9	1973.8	45.3	1973.8	41.6	1973.8	38.4	1973.8	35.6	1973.8	33.2	1973.8	31.2	1973.8
216"	117.3	2199.2	97.7	2199.2	83.8	2199.2	73.3	2199.2	65.2	2199.2	58.6	2199.2	53.3	2199.2	48.9	2199.2	45.1	2199.2	41.9	2199.2	38.2	2148.8	32.2	1932.0
204"	120.0	2125.0	116.0	2465.5	99.4	2465.5	87.0	2465.5	77.3	2465.5	69.6	2465.5	63.3	2465.5	58.0	2465.5	53.5	2465.5	45.7	2266.0	38.2	2029.4	32.2	1824.7
192"	120.0	2000.0	120.0	2400.0	119.3	2783.3	104.4	2783.3	92.8	2783.3	83.5	2783.3	75.9	2783.3	67.3	2692.0	55.2	2392.0	45.7	2132.7	38.2	1910.0	32.2	1717.3
180"	120.0	1875.0	120.0	2250.0	120.0	2625.0	120.0	3000.0	112.6	3166.8	101.3	3166.8	83.1	2856.6	67.3	2523.8	55.2	2242.5	45.7	1999.4	38.2	1790.6	32.2	1610.0
168"	120.0	1750.0	120.0	2100.0	120.0	2450.0	120.0	2800.0	120.0	3150.0	104.2	3039.2	83.1	2666.1	67.3	2355.5	55.2	2093.0	45.7	1866.1	38.2	1671.3	32.2	1502.7
156"	120.0	1625.0	120.0	1950.0	120.0	2275.0	120.0	2600.0	120.0	2925.0	104.2	2822.1	83.1	2475.7	67.3	2187.3	55.2	1943.5	45.7	1732.8	38.2	1551.9	32.2	1395.3
144"	120.0	1500.0	120.0	1800.0	120.0	2100.0	120.0	2400.0	120.0	2700.0	104.2	2605.0	83.1	2285.3	67.3	2019.0	55.2	1794.0	45.7	1599.5	38.2	1432.5	32.2	1288.0
132"	120.0	1375.0	120.0	1650.0	120.0	1925.0	120.0	2200.0	120.0	2475.0	104.2	2387.9	83.1	2094.8	67.3	1850.8	55.2	1644.5	45.7	1466.2	38.2	1313.1	32.2	1180.7
120"	120.0	1250.0	120.0	1500.0	120.0	1750.0	120.0	2000.0	120.0	2250.0	104.2	2170.8	83.1	1904.4	67.3	1682.5	55.2	1495.0	45.7	1332.9	38.2	1193.8	32.2	1073.3
108"	120.0	1125.0	120.0	1350.0	120.0	1575.0	120.0	1800.0	120.0	2025.0	104.2	1953.8	83.1	1713.9	67.3	1514.3	55.2	1345.5	45.7	1199.6	38.2	1074.4	32.2	966.0
96"	120.0	1000.0	120.0	1200.0	120.0	1400.0	120.0	1600.0	120.0	1800.0	104.2	1736.7	83.1	1523.5	67.3	1346.0	55.2	1196.0	45.7	1066.3	38.2	955.0	32.2	858.7
84"	120.0	875.0	120.0	1050.0	120.0	1225.0	120.0	1400.0	120.0	1575.0	104.2	1519.6	83.1	1333.1	67.3	1177.8	55.2	1046.5	45.7	933.0	38.2	835.6	32.2	751.3
72"	120.0	750.0	120.0	900.0	120.0	1050.0	120.0	1200.0	120.0	1350.0	104.2	1302.5	83.1	1142.6	67.3	1009.5	55.2	897.0	45.7	799.8	38.2	716.3	32.2	644.0
60"	120.0	625.0	120.0	750.0	120.0	875.0	120.0	1000.0	120.0	1125.0	104.2	1085.4	83.1	952.2	67.3	841.3	55.2	747.5	45.7	666.5	38.2	596.9	32.2	536.7
48"	120.0	500.0	120.0	600.0	120.0	700.0	120.0	800.0	120.0	900.0	104.2	868.3	83.1	761.8	67.3	673.0	55.2	598.0	45.7	533.2	38.2	477.5	32.2	429.3
36"	120.0	375.0	120.0	450.0	120.0	525.0	120.0	600.0	120.0	675.0	104.2	651.3	83.1	571.3	67.3	504.8	55.2	448.5	45.7	399.9	38.2	358.1	32.2	322.0

STORM BAR AND MULLION SCHEDULE: 2"x4"x1/8" WITH 1.75"x3.75"x0.125" STEEL REINFORCEMENT*

MEMBER LENGTH	SLAT SPAN 25" DESIGN PRESSURE (PSF)	25" REACTION AT ENDS (LBS)	30" DESIGN PRESSURE (PSF)	30" REACTION AT ENDS (LBS)	35" DESIGN PRESSURE (PSF)	35" REACTION AT ENDS (LBS)	40" DESIGN PRESSURE (PSF)	40" REACTION AT ENDS (LBS)	45" DESIGN PRESSURE (PSF)	45" REACTION AT ENDS (LBS)	50" DESIGN PRESSURE (PSF)	50" REACTION AT ENDS (LBS)	55" DESIGN PRESSURE (PSF)	55" REACTION AT ENDS (LBS)	60" DESIGN PRESSURE (PSF)	60" REACTION AT ENDS (LBS)	65" DESIGN PRESSURE (PSF)	65" REACTION AT ENDS (LBS)	70" DESIGN PRESSURE (PSF)	70" REACTION AT ENDS (LBS)	75" DESIGN PRESSURE (PSF)	75" REACTION AT ENDS (LBS)	80" DESIGN PRESSURE (PSF)	80" REACTION AT ENDS (LBS)
120"	93.4	973.2	77.9	973.2	66.7	973.2	58.4	973.2	51.9	973.2	46.7	973.2	42.5	973.2	38.9	973.2	35.9	973.2	33.4	973.2	31.1	973.2	29.2	973.2
108"	120.0	1125.0	105.4	1186.0	90.4	1186.0	79.1	1186.0	70.3	1186.0	63.3	1186.0	57.5	1186.0	52.7	1186.0	48.7	1186.0	45.2	1186.0	38.2	1074.4	32.2	966.0
96"	120.0	1000.0	120.0	1200.0	120.0	1400.0	105.5	1406.8	93.8	1406.8	84.4	1406.8	76.7	1406.8	67.3	1346.0	55.2	1196.0	45.7	1066.3	38.2	955.0	32.2	858.7
84"	120.0	875.0	120.0	1050.0	120.0	1225.0	120.0	1400.0	120.0	1575.0	104.2	1519.6	83.1	1333.1	67.3	1177.8	55.2	1046.5	45.7	933.0	38.2	835.6	32.2	751.3
72"	120.0	750.0	120.0	900.0	120.0	1050.0	120.0	1200.0	120.0	1350.0	104.2	1302.5	83.1	1142.6	67.3	1009.5	55.2	897.0	45.7	799.8	38.2	716.3	32.2	644.0
60"	120.0	625.0	120.0	750.0	120.0	875.0	120.0	1000.0	120.0	1125.0	104.2	1085.4	83.1	952.2	67.3	841.3	55.2	747.5	45.7	666.5	38.2	596.9	32.2	536.7
48"	120.0	500.0	120.0	600.0	120.0	700.0	120.0	800.0	120.0	900.0	104.2	868.3	83.1	761.8	67.3	673.0	55.2	598.0	45.7	533.2	38.2	477.5	32.2	429.3
36"	120.0	375.0	120.0	450.0	120.0	525.0	120.0	600.0	120.0	675.0	104.2	651.3	83.1	571.3	67.3	504.8	55.2	448.5	45.7	399.9	38.2	358.1	32.2	322.0

STORM BAR AND MULLION SCHEDULE: 2"x5"x1/8" WITH 1.75"x4.75"x0.125" STEEL REINFORCEMENT*

MEMBER LENGTH	SLAT SPAN 25" DESIGN PRESSURE (PSF)	25" REACTION AT ENDS (LBS)	30" DESIGN PRESSURE (PSF)	30" REACTION AT ENDS (LBS)	35" DESIGN PRESSURE (PSF)	35" REACTION AT ENDS (LBS)	40" DESIGN PRESSURE (PSF)	40" REACTION AT ENDS (LBS)	45" DESIGN PRESSURE (PSF)	45" REACTION AT ENDS (LBS)	50" DESIGN PRESSURE (PSF)	50" REACTION AT ENDS (LBS)	55" DESIGN PRESSURE (PSF)	55" REACTION AT ENDS (LBS)	60" DESIGN PRESSURE (PSF)	60" REACTION AT ENDS (LBS)	65" DESIGN PRESSURE (PSF)	65" REACTION AT ENDS (LBS)	70" DESIGN PRESSURE (PSF)	70" REACTION AT ENDS (LBS)	75" DESIGN PRESSURE (PSF)	75" REACTION AT ENDS (LBS)	80" DESIGN PRESSURE (PSF)	80" REACTION AT ENDS (LBS)
120"	120.0	1250.0	106.2	1327.6	91.0	1327.6	79.7	1327.6	70.8	1327.6	63.7	1327.6	57.9	1327.6	53.1	1327.6	49.0	1327.6	45.5	1327.6	38.2	1193.8	32.2	1073.3
108"	120.0	1125.0	120.0	1350.0	116.9	1534.7	102.3	1534.7	90.9	1534.7	81.9	1534.7	74.4	1534.7	67.3	1514.3	55.2	1345.5	45.7	1199.6	38.2	1074.4	32.2	966.0
96"	120.0	1000.0	120.0	1200.0	120.0	1400.0	120.0	1600.0	120.0	1800.0	104.2	1736.7	83.1	1523.5	67.3	1346.0	55.2	1196.0	45.7	1066.3	38.2	955.0	32.2	858.7
84"	120.0	875.0	120.0	1050.0	120.0	1225.0	120.0	1400.0	120.0	1575.0	104.2	1519.6	83.1	1333.1	67.3	1177.8	55.2	1046.5	45.7	933.0	38.2	835.6	32.2	751.3
72"	120.0	750.0	120.0	900.0	120.0	1050.0	120.0	1200.0	120.0	1350.0	104.2	1302.5	83.1	1142.6	67.3	1009.5	55.2	897.0	45.7	799.8	38.2	716.3	32.2	644.0
60"	120.0	625.0	120.0	750.0	120.0	875.0	120.0	1000.0	120.0	1125.0	104.2	1085.4	83.1	952.2	67.3	841.3	55.2	747.5	45.7	666.5	38.2	596.9	32.2	536.7
48"	120.0	500.0	120.0	600.0	120.0	700.0	120.0	800.0	120.0	900.0	104.2	868.3	83.1	761.8	67.3	673.0	55.2	598.0	45.7	533.2	38.2	477.5	32.2	429.3
36"	120.0	375.0	120.0	450.0	120.0	525.0	120.0	600.0	120.0	675.0	104.2	651.3	83.1	571.3	67.3	504.8	55.2	448.5	45.7	399.9	38.2	358.1	32.2	322.0

***NOTE**: STEEL REINFORCEMENT LENGTH SHALL BE A MINIMUM OF 90% THE MULLION LENGTH, LOCATED AT THE CENTER OF THE MULLION AND FASTENED IN PLACE WITH #14 18-8 SS OR COATED SAE GR. 5 STEEL SMS OR SDS AT 12" O.C. MAX STAGGERED ALONG THE FULL REINFORCEMENT LENGTH. (REFERENCE STEEL REINFORCEMENT DETAIL 1/2)

SEE SHEET 7 FOR STORM BAR AND MULLION SCHEDULE NOTES.

STATE OF TEXAS
FRANK L. BENNARDO, P.E.
PE96064
06/05/2013
CERT OF REG. #F-11383
FRANK L. BENNARDO, P.E.
160 SW 12th AVENUE #106
DEERFIELD BEACH, FL 33442
PH: (954) 354-0660 FAX: (954) 354-0[illegible]
POWERED BY THE INNOVATIONS OF ENGINEERING EXPRESS®
EXPERIENCE MORE AT WWW.ENGEXP.COM

Town & Country INDUSTRIES
Wholesale Aluminum and Building Products
A Division of ABC Supply Co., Inc.
400 WEST MCNAB ROAD
FT. LAUDERDALE, FL 33309

REMARKS	DRWN	CHKD	DATE
INIT ISSUE	KL	FLB	05/30/13

THIS DOCUMENT IS THE PROPERTY OF FRANK L. BENNARDO, P.E. AND SHALL NOT BE REPRODUCED IN WHOLE OR PART WITHOUT WRITTEN CONSENT OF FRANK L. BENNARDO, P.E. ALTERATIONS, ADDITIONS, OR OTHER MARKINGS TO THIS DOCUMENT ARE NOT PERMITTED AND INVALIDATE OUR CERTIFICATION.
COPYRIGHT FRANK L. BENNARDO P.E.

13-TCM-02b
SCALE: - 01
PAGE DESCRIPTION:
-
-

STORM BAR AND MULLION SCHEDULE: 2"x6"x1/8" WITH 1.75"x5.75"x0.125" STEEL REINFORCEMENT*

MEMBER LENGTH	SLAT SPAN 25"		30"		35"		40"		45"		50"		55"		60"		65"		70"		75"		80"	
	DESIGN PRESSURE (PSF)	REACTION AT ENDS (LBS)	DESIGN PRESSURE (PSF)	REACTION AT ENDS (LBS)	DESIGN PRESSURE (PSF)	REACTION AT ENDS (LBS)	DESIGN PRESSURE (PSF)	REACTION AT ENDS (LBS)	DESIGN PRESSURE (PSF)	REACTION AT ENDS (LBS)	DESIGN PRESSURE (PSF)	REACTION AT ENDS (LBS)	DESIGN PRESSURE (PSF)	REACTION AT ENDS (LBS)	DESIGN PRESSURE (PSF)	REACTION AT ENDS (LBS)	DESIGN PRESSURE (PSF)	REACTION AT ENDS (LBS)	DESIGN PRESSURE (PSF)	REACTION AT ENDS (LBS)	DESIGN PRESSURE (PSF)	REACTION AT ENDS (LBS)	DESIGN PRESSURE (PSF)	REACTION AT ENDS (LBS)
120"	120.0	1250.0	120.0	1500.0	115.0	1676.7	100.6	1676.7	89.4	1676.7	80.5	1676.7	73.2	1676.7	67.1	1676.7	55.2	1495.0	45.7	1332.9	38.2	1193.8	32.2	1073.3
108"	120.0	1125.0	120.0	1350.0	120.0	1575.0	120.0	1800.0	114.6	1934.0	103.1	1934.0	83.1	1713.9	67.3	1514.3	55.2	1345.5	45.7	1199.6	38.2	1074.4	32.2	966.0
96"	120.0	1000.0	120.0	1200.0	120.0	1400.0	120.0	1600.0	120.0	1800.0	104.2	1736.7	83.1	1523.5	67.3	1346.0	55.2	1196.0	45.7	1066.3	38.2	955.0	32.2	858.7
84"	120.0	875.0	120.0	1050.0	120.0	1225.0	120.0	1400.0	120.0	1575.0	104.2	1519.6	83.1	1333.1	67.3	1177.8	55.2	1046.5	45.7	933.0	38.2	835.6	32.2	751.3
72"	120.0	750.0	120.0	900.0	120.0	1050.0	120.0	1200.0	120.0	1350.0	104.2	1302.5	83.1	1142.6	67.3	1009.5	55.2	897.0	45.7	799.8	38.2	716.3	32.2	644.0
60"	120.0	625.0	120.0	750.0	120.0	875.0	120.0	1000.0	120.0	1125.0	104.2	1085.4	83.1	952.2	67.3	841.3	55.2	747.5	45.7	666.5	38.2	596.9	32.2	536.7
48"	120.0	500.0	120.0	600.0	120.0	700.0	120.0	800.0	120.0	900.0	104.2	868.3	83.1	761.8	67.3	673.0	55.2	598.0	45.7	533.2	38.2	477.5	32.2	429.3

STORM BAR AND MULLION SCHEDULE: 3"x3"x1/8" WITH 2.75"x2.75"x0.125" STEEL REINFORCEMENT*

MEMBER LENGTH	SLAT SPAN 25"		30"		35"		40"		45"		50"		55"		60"		65"		70"		75"		80"	
	DESIGN PRESSURE (PSF)	REACTION AT ENDS (LBS)	DESIGN PRESSURE (PSF)	REACTION AT ENDS (LBS)	DESIGN PRESSURE (PSF)	REACTION AT ENDS (LBS)	DESIGN PRESSURE (PSF)	REACTION AT ENDS (LBS)	DESIGN PRESSURE (PSF)	REACTION AT ENDS (LBS)	DESIGN PRESSURE (PSF)	REACTION AT ENDS (LBS)	DESIGN PRESSURE (PSF)	REACTION AT ENDS (LBS)	DESIGN PRESSURE (PSF)	REACTION AT ENDS (LBS)	DESIGN PRESSURE (PSF)	REACTION AT ENDS (LBS)	DESIGN PRESSURE (PSF)	REACTION AT ENDS (LBS)	DESIGN PRESSURE (PSF)	REACTION AT ENDS (LBS)	DESIGN PRESSURE (PSF)	REACTION AT ENDS (LBS)
120"	64.2	668.4	53.5	668.4	45.8	668.4	40.1	668.4	35.6	668.4	32.1	668.4	29.2	668.4	26.7	668.4	24.7	668.4	22.9	668.4	21.4	668.4	20.1	668.4
108"	88.0	825.2	73.3	825.2	62.9	825.2	55.0	825.2	48.9	825.2	44.0	825.2	40.0	825.2	36.7	825.2	33.9	825.2	31.4	825.2	29.3	825.2	27.5	825.2
96"	120.0	1000.0	104.4	1044.4	89.5	1044.4	78.3	1044.4	69.6	1044.4	62.7	1044.4	57.0	1044.4	52.2	1044.4	48.2	1044.4	44.8	1044.4	38.2	955.0	32.2	858.7
84"	120.0	875.0	120.0	1050.0	120.0	1225.0	116.9	1364.1	103.9	1364.1	93.5	1364.1	83.1	1333.1	67.3	1177.8	55.2	1046.5	45.7	933.0	38.2	835.6	32.2	751.3
72"	120.0	750.0	120.0	900.0	120.0	1050.0	120.0	1200.0	120.0	1350.0	104.2	1302.5	83.1	1142.6	67.3	1009.5	55.2	897.0	45.7	799.8	38.2	716.3	32.2	644.0
60"	120.0	625.0	120.0	750.0	120.0	875.0	120.0	1000.0	120.0	1125.0	104.2	1085.4	83.1	952.2	67.3	841.3	55.2	747.5	45.7	666.5	38.2	596.9	32.2	536.7
48"	120.0	500.0	120.0	600.0	120.0	700.0	120.0	800.0	120.0	900.0	104.2	868.3	83.1	761.8	67.3	673.0	55.2	598.0	45.7	533.2	38.2	477.5	32.2	429.3

STORM BAR AND MULLION SCHEDULE: 4"x4"x1/8" WITH 3.75"x3.75"x0.125" STEEL REINFORCEMENT*

MEMBER LENGTH	SLAT SPAN 25"		30"		35"		40"		45"		50"		55"		60"		65"		70"		75"		80"	
	DESIGN PRESSURE (PSF)	REACTION AT ENDS (LBS)	DESIGN PRESSURE (PSF)	REACTION AT ENDS (LBS)	DESIGN PRESSURE (PSF)	REACTION AT ENDS (LBS)	DESIGN PRESSURE (PSF)	REACTION AT ENDS (LBS)	DESIGN PRESSURE (PSF)	REACTION AT ENDS (LBS)	DESIGN PRESSURE (PSF)	REACTION AT ENDS (LBS)	DESIGN PRESSURE (PSF)	REACTION AT ENDS (LBS)	DESIGN PRESSURE (PSF)	REACTION AT ENDS (LBS)	DESIGN PRESSURE (PSF)	REACTION AT ENDS (LBS)	DESIGN PRESSURE (PSF)	REACTION AT ENDS (LBS)	DESIGN PRESSURE (PSF)	REACTION AT ENDS (LBS)	DESIGN PRESSURE (PSF)	REACTION AT ENDS (LBS)
120"	120.0	1250.0	120.0	1500.0	115.4	1682.8	101.0	1682.8	89.7	1682.8	80.8	1682.8	73.4	1682.8	67.3	1682.5	55.2	1495.0	45.7	1332.9	38.2	1193.8	32.2	1073.3
108"	120.0	1125.0	120.0	1350.0	120.0	1575.0	120.0	1800.0	120.0	2025.0	104.2	1953.8	83.1	1713.9	67.3	1514.3	55.2	1345.5	45.7	1199.6	38.2	1074.4	32.2	966.0
96"	120.0	1000.0	120.0	1200.0	120.0	1400.0	120.0	1600.0	120.0	1800.0	104.2	1736.7	83.1	1523.5	67.3	1346.0	55.2	1196.0	45.7	1066.3	38.2	955.0	32.2	858.7
84"	120.0	875.0	120.0	1050.0	120.0	1225.0	120.0	1400.0	120.0	1575.0	104.2	1519.6	83.1	1333.1	67.3	1177.8	55.2	1046.5	45.7	933.0	38.2	835.6	32.2	751.3
72"	120.0	750.0	120.0	900.0	120.0	1050.0	120.0	1200.0	120.0	1350.0	104.2	1302.5	83.1	1142.6	67.3	1009.5	55.2	897.0	45.7	799.8	38.2	716.3	32.2	644.0
60"	120.0	625.0	120.0	750.0	120.0	875.0	120.0	1000.0	120.0	1125.0	104.2	1085.4	83.1	952.2	67.3	841.3	55.2	747.5	45.7	666.5	38.2	596.9	32.2	536.7
48"	120.0	500.0	120.0	600.0	120.0	700.0	120.0	800.0	120.0	900.0	104.2	868.3	83.1	761.8	67.3	673.0	55.2	598.0	45.7	533.2	38.2	477.5	32.2	429.3

***NOTE**: STEEL REINFORCEMENT LENGTH SHALL BE A MINIMUM OF 90% THE MULLION LENGTH, LOCATED AT THE CENTER OF THE MULLION AND FASTENED IN PLACE WITH #14 18-8 SS OR COATED SAE GR. 5 STEEL SMS OR SDS AT 12" O.C. MAX STAGGERED ALONG THE FULL REINFORCEMENT LENGTH. (REFERENCE STEEL REINFORCEMENT DETAIL 1/2)

STORM BAR AND MULLION SCHEDULE NOTES:

1. PRESSURES SHOWN IN "STORM BAR AND MULLION SCHEDULE" ARE MAXIMUM ALLOWABLE POSITIVE AND NEGATIVE DESIGN PRESSURES AT EACH RESPECTIVE SLAT SPAN AND STORM BAR/MULLION HEIGHT. DESIGN VALUES NOTED HEREIN WHEN USED WITH MULLIONS SHALL ONLY BE USED WITH NON-END RETENTION ROLL-UP SHUTTERS.
2. "STORM BAR AND MULLION SCHEDULES" ARE APPLICABLE TO ALL STORM BARS AND NON-END RETENTION MULLIONS.
3. SEE SHEET 2 FOR STORM BAR, MULLION, AND REINFORCEMENT DETAIL AND MATERIALS.
4. FOR END MULLIONS, ONE HALF OF THE SLAT SPAN MAY BE USED TO DETERMINE ALLOWABLE DESIGN PRESSURES AND END REACTIONS. END MULLIONS ARE AS DEFINED IN ELEVATION 2/1.
5. ALLOWABLE DESIGN PRESSURES AND SLAT SPANS INDICATED ARE FOR DETERMINING PERMISSIBLE STORM BAR AND MULLION HEIGHTS ONLY. ACTUAL SLAT SPANS AND DESIGN PRESSURES SHALL NOT EXCEED THOSE INDICATED IN SEPARATE ROLL-UP SHUTTER APPROVAL.
6. "REACTION AT ENDS" IS LISTED FOR EACH COMBINATION OF DESIGN LOAD, STORM BAR/MULLION TYPE, & SLAT SPAN. CHOOSE MOUNTING CONNECTIONS (PER APPLICABLE CONNECTION DETAILS HEREIN) THAT PROVIDES "CONNECTION CAPACITY" GREATER THAN OR EQUAL TO "REACTION AT ENDS" GIVEN ABOVE.
7. THIS SCHEDULE MAY BE USED FOR ALL MOUNTING CONDITIONS LISTED HEREIN.
8. ▨ DENOTES CONDITIONS NOT APPROVED FOR USE.

STATE OF TEXAS
FRANK L. BENNARDO, P.E.
PE96064
06/05/2013
CERTIFICATE OF AUTHORIZATION #F-10088

FRANK L. BENNARDO P.E.
160 SW 12th AVENUE
DEERFIELD BEACH, FL 33442
PH: (954) 354-0660 FAX: (954) 354-1043
POWERED BY THE INNOVATIONS OF
ENGINEERING EXPRESS®
EXPERIENCE MORE AT WWW.ENGEXP.COM

Town & Country INDUSTRIES
Wholesale Aluminum and Building Products
A Division of R&O Supply Co., Inc.
400 WEST MCNAB ROAD
FT. LAUDERDALE, FL 33309

REMARKS	DRWN	CHKD	DATE
INIT ISSUE	KL	FLB	05/30/13

THIS DOCUMENT IS THE PROPERTY OF FRANK L. BENNARDO, P.E AND SHALL NOT BE REPRODUCED IN WHOLE OR PART WITHOUT WRITTEN CONSENT OF FRANK L. BENNARDO, P.E. THE INFORMATION, DATA, DESIGNS, OR OPINIONS CONTAINED IN THIS DOCUMENT, ARE NOT PERMITTED AND INVALIDATE OUR CERTIFICATION.

COPYRIGHT FRANK L. BENNARDO P.E.

13-TCM-02b

SCALE: - 01

PAGE DESCRIPTION:

C:\Documents and Settings\keithl\My Documents\Dropbox\Work Stuff\Town And Country Maestro TDI\13-TCM-02 Maestroshield Roll-Up (TDI)\13-TCM-02b_01a Mullion, Storm Bar, Header.dwg
06/05/2013 - 12:22pm keithl

HEADER SCHEDULE: 2"x4"x1/8" HEADER

HEADER LENGTH	STORM BAR HEIGHT 60"		72"		84"		96"		108"		120"		132"		144"		156"		168"		180"		192"	
	DESIGN PRESSURE (PSF)	REACTION AT ENDS (LBS)	DESIGN PRESSURE (PSF)	REACTION AT ENDS (LBS)	DESIGN PRESSURE (PSF)	REACTION AT ENDS (LBS)	DESIGN PRESSURE (PSF)	REACTION AT ENDS (LBS)	DESIGN PRESSURE (PSF)	REACTION AT ENDS (LBS)	DESIGN PRESSURE (PSF)	REACTION AT ENDS (LBS)	DESIGN PRESSURE (PSF)	REACTION AT ENDS (LBS)	DESIGN PRESSURE (PSF)	REACTION AT ENDS (LBS)	DESIGN PRESSURE (PSF)	REACTION AT ENDS (LBS)	DESIGN PRESSURE (PSF)	REACTION AT ENDS (LBS)	DESIGN PRESSURE (PSF)	REACTION AT ENDS (LBS)	DESIGN PRESSURE (PSF)	REACTION AT ENDS (LBS)
120"	39.2	326.7	32.7	326.7	28.0	326.7																		
108"	53.8	403.4	44.8	403.4	38.4	403.4	33.6	403.4	29.9	403.4	26.9	403.4												
96"	76.6	510.5	63.8	510.5	54.7	510.5	47.9	510.5	42.5	510.5	38.3	510.5	34.8	510.5	31.9	510.5	29.5	510.5	27.3	510.5	25.5	510.5		
84"	114.3	666.8	95.3	666.8	81.7	666.8	71.4	666.8	63.5	666.8	57.2	666.8	52.0	666.8	47.6	666.8	44.0	666.8	40.8	666.8	38.1	666.8	35.7	666.8
72"	120.0	600.0	120.0	720.0	118.7	831.0	103.9	831.0	92.3	831.0	83.1	831.0	75.5	831.0	69.3	831.0	63.9	831.0	59.4	831.0	55.4	831.0	51.9	831.0
60"	120.0	500.0	120.0	600.0	120.0	700.0	120.0	800.0	120.0	900.0	120.0	1000.0	109.3	1002.1	100.2	1002.1	92.5	1002.1	85.9	1002.1	80.2	1002.1	75.2	1002.1
48"	120.0	400.0	120.0	480.0	120.0	560.0	120.0	640.0	120.0	720.0	120.0	800.0	120.0	880.0	120.0	960.0	120.0	1040.0	120.0	1120.0	120.0	1200.0	117.4	1252.6
36"	120.0	300.0	120.0	360.0	120.0	420.0	120.0	480.0	120.0	540.0	120.0	600.0	120.0	660.0	120.0	720.0	120.0	780.0	120.0	840.0	120.0	900.0	120.0	960.0

HEADER SCHEDULE: 2"x4"x1/4" HEADER

HEADER LENGTH	STORM BAR HEIGHT 60"		76"		92"		108"		124"		140"		156"		172"		188"		204"		220"		228"	
	DESIGN PRESSURE (PSF)	REACTION AT ENDS (LBS)	DESIGN PRESSURE (PSF)	REACTION AT ENDS (LBS)	DESIGN PRESSURE (PSF)	REACTION AT ENDS (LBS)	DESIGN PRESSURE (PSF)	REACTION AT ENDS (LBS)	DESIGN PRESSURE (PSF)	REACTION AT ENDS (LBS)	DESIGN PRESSURE (PSF)	REACTION AT ENDS (LBS)	DESIGN PRESSURE (PSF)	REACTION AT ENDS (LBS)	DESIGN PRESSURE (PSF)	REACTION AT ENDS (LBS)	DESIGN PRESSURE (PSF)	REACTION AT ENDS (LBS)	DESIGN PRESSURE (PSF)	REACTION AT ENDS (LBS)	DESIGN PRESSURE (PSF)	REACTION AT ENDS (LBS)	DESIGN PRESSURE (PSF)	REACTION AT ENDS (LBS)
120"	69.9	582.6	55.2	582.6	45.6	582.6	38.8	582.6	33.8	582.6	30.0	582.6	26.9	582.6										
108"	95.9	719.3	75.7	719.3	62.5	719.3	53.3	719.3	46.4	719.3	41.1	719.3	36.9	719.3	33.5	719.3	30.6	719.3	28.2	719.3	26.2	719.3	25.2	719.3
96"	120.0	800.0	107.8	910.4	89.1	910.4	75.9	910.4	66.1	910.4	58.5	910.4	52.5	910.4	47.6	910.4	43.6	910.4	40.2	910.4	37.2	910.4	35.9	910.4
84"	120.0	700.0	120.0	886.7	120.0	1073.3	113.2	1189.1	98.6	1189.1	87.4	1189.1	78.4	1189.1	71.1	1189.1	65.1	1189.1	60.0	1189.1	55.6	1189.1	53.6	1189.1
72"	120.0	600.0	120.0	760.0	120.0	920.0	120.0	1080.0	120.0	1240.0	120.0	1400.0	120.0	1560.0	112.9	1618.5	103.3	1618.5	95.2	1618.5	88.3	1618.5	85.2	1618.5
60"	120.0	500.0	120.0	633.3	120.0	766.7	120.0	900.0	120.0	1033.3	120.0	1166.7	120.0	1300.0	120.0	1433.3	120.0	1566.7	120.0	1700.0	120.0	1833.3	120.0	1900.0
48"	120.0	400.0	120.0	506.7	120.0	613.3	120.0	720.0	120.0	826.7	120.0	933.3	120.0	1040.0	120.0	1146.7	120.0	1253.3	120.0	1360.0	120.0	1466.7	120.0	1520.0
36"	120.0	300.0	120.0	380.0	120.0	460.0	120.0	540.0	120.0	620.0	120.0	700.0	120.0	780.0	120.0	860.0	120.0	940.0	120.0	1020.0	120.0	1100.0	120.0	1140.0

HEADER SCHEDULE: 2"x5"x1/8" HEADER

HEADER LENGTH	STORM BAR HEIGHT 60"		72"		84"		96"		108"		120"		132"		144"		156"		168"		180"		192"	
	DESIGN PRESSURE (PSF)	REACTION AT ENDS (LBS)	DESIGN PRESSURE (PSF)	REACTION AT ENDS (LBS)	DESIGN PRESSURE (PSF)	REACTION AT ENDS (LBS)	DESIGN PRESSURE (PSF)	REACTION AT ENDS (LBS)	DESIGN PRESSURE (PSF)	REACTION AT ENDS (LBS)	DESIGN PRESSURE (PSF)	REACTION AT ENDS (LBS)	DESIGN PRESSURE (PSF)	REACTION AT ENDS (LBS)	DESIGN PRESSURE (PSF)	REACTION AT ENDS (LBS)	DESIGN PRESSURE (PSF)	REACTION AT ENDS (LBS)	DESIGN PRESSURE (PSF)	REACTION AT ENDS (LBS)	DESIGN PRESSURE (PSF)	REACTION AT ENDS (LBS)	DESIGN PRESSURE (PSF)	REACTION AT ENDS (LBS)
84"	120.0	700.0	120.0	840.0	120.0	980.0	105.2	982.3	93.6	982.3	84.2	982.3	76.5	982.3	70.2	982.3	64.8	982.3	60.1	982.3	56.1	982.3	52.6	982.3
72"	120.0	600.0	120.0	720.0	120.0	840.0	120.0	960.0	120.0	1080.0	115.7	1156.8	105.2	1156.8	96.4	1156.8	89.0	1156.8	82.6	1156.8	77.1	1156.8	72.3	1156.8
60"	120.0	500.0	120.0	600.0	120.0	700.0	120.0	800.0	120.0	900.0	120.0	1000.0	120.0	1100.0	120.0	1200.0	120.0	1300.0	120.0	1400.0	112.1	1401.8	105.1	1401.8
48"	120.0	400.0	120.0	480.0	120.0	560.0	120.0	640.0	120.0	720.0	120.0	800.0	120.0	880.0	120.0	960.0	120.0	1040.0	120.0	1120.0	120.0	1200.0	120.0	1280.0
36"	120.0	300.0	120.0	360.0	120.0	420.0	120.0	480.0	120.0	540.0	120.0	600.0	120.0	660.0	120.0	720.0	120.0	780.0	120.0	840.0	120.0	900.0	120.0	960.0

HEADER SCHEDULE: 2"x5"x1/4" HEADER

HEADER LENGTH	STORM BAR HEIGHT 60"		76"		92"		108"		124"		140"		156"		172"		188"		204"		220"		228"	
	DESIGN PRESSURE (PSF)	REACTION AT ENDS (LBS)	DESIGN PRESSURE (PSF)	REACTION AT ENDS (LBS)	DESIGN PRESSURE (PSF)	REACTION AT ENDS (LBS)	DESIGN PRESSURE (PSF)	REACTION AT ENDS (LBS)	DESIGN PRESSURE (PSF)	REACTION AT ENDS (LBS)	DESIGN PRESSURE (PSF)	REACTION AT ENDS (LBS)	DESIGN PRESSURE (PSF)	REACTION AT ENDS (LBS)	DESIGN PRESSURE (PSF)	REACTION AT ENDS (LBS)	DESIGN PRESSURE (PSF)	REACTION AT ENDS (LBS)	DESIGN PRESSURE (PSF)	REACTION AT ENDS (LBS)	DESIGN PRESSURE (PSF)	REACTION AT ENDS (LBS)	DESIGN PRESSURE (PSF)	REACTION AT ENDS (LBS)
120"	120.0	1000.0	98.2	1036.6	81.1	1036.6	69.1	1036.6	60.2	1036.6	53.3	1036.6	47.8	1036.6	43.4	1036.6	39.7	1036.6	36.6	1036.6	33.9	1036.6	32.7	1036.6
108"	120.0	900.0	120.0	1140.0	111.3	1279.8	94.8	1279.8	82.6	1279.8	73.1	1279.8	65.6	1279.8	59.5	1279.8	54.5	1279.8	50.2	1279.8	46.5	1279.8	44.9	1279.8
96"	120.0	800.0	120.0	1013.3	120.0	1226.7	120.0	1440.0	117.6	1619.8	104.1	1619.8	93.4	1619.8	84.8	1619.8	77.5	1619.8	71.5	1619.8	66.3	1619.8	63.9	1619.8
84"	120.0	700.0	120.0	886.7	120.0	1073.3	120.0	1260.0	120.0	1446.7	120.0	1633.3	120.0	1820.0	120.0	2006.7	115.7	2115.6	106.7	2115.6	98.9	2115.6	95.4	2115.6
72"	120.0	600.0	120.0	760.0	120.0	920.0	120.0	1080.0	120.0	1240.0	120.0	1400.0	120.0	1560.0	120.0	1720.0	120.0	1880.0	120.0	2040.0	120.0	2200.0	120.0	2280.0
60"	120.0	500.0	120.0	633.3	120.0	766.7	120.0	900.0	120.0	1033.3	120.0	1166.7	120.0	1300.0	120.0	1433.3	120.0	1566.7	120.0	1700.0	120.0	1833.3	120.0	1900.0
48"	120.0	400.0	120.0	506.7	120.0	613.3	120.0	720.0	120.0	826.7	120.0	933.3	120.0	1040.0	120.0	1146.7	120.0	1253.3	120.0	1360.0	120.0	1466.7	120.0	1520.0
36"	120.0	300.0	120.0	380.0	120.0	460.0	120.0	540.0	120.0	620.0	120.0	700.0	120.0	780.0	120.0	860.0	120.0	940.0	120.0	1020.0	120.0	1100.0	120.0	1140.0

SEE SHEET 12 FOR HEADER SCHEDULE NOTES.

FRANK L. BENNARDO
160 SW 12th AVENUE, #106
DEERFIELD BEACH, FL 33442
PH: (954) 354-0660 FAX: (954) 354-0443
POWERED BY THE INNOVATORS
ENGINEERING EXPRESS
EXPERIENCE MORE AT WWW.ENGEXP.COM

Town & Country INDUSTRIES
Wholesale Aluminum and Building Products
A Division of ABC Supply Co., Inc.
400 WEST MCNAB ROAD
FT. LAUDERDALE, FL 33309

REMARKS	DRWN	CHKD	DATE
INIT ISSUE	KL	FLB	05/30/13

THIS DOCUMENT IS THE PROPERTY OF FRANK L. BENNARDO, P.E. AND SHALL NOT BE REPRODUCED IN WHOLE OR PART WITHOUT WRITTEN CONSENT OF FRANK L. BENNARDO, P.E. ALTERATIONS, ADDITIONS, AND/OR OTHER MARKINGS TO THIS DOCUMENT ARE NOT PERMITTED AND INVALIDATE OUR CERTIFICATION.
COPYRIGHT FRANK L. BENNARDO P.E.

13-TCM-02b
SCALE: - 01
PAGE DESCRIPTION:
-
-

C:\Documents and Settings\keith\My Documents\Dropbox\Work Stuff\Town And Country Maestro TDI\13-TCM-02 Maestroshield Roll-Up (TDI)13-TCM-02b_01a Mullion, Storm Bar, Header.dwg
06/05/2013 - 12:22pm keithl

HEADER SCHEDULE: 2"x6"x1/8" HEADER

HEADER LENGTH	STORM BAR HEIGHT 60"		76"		92"		108"		124"		140"		156"		172"		188"		204"		220"		228"	
	DESIGN PRESSURE (PSF)	REACTION AT ENDS (LBS)	DESIGN PRESSURE (PSF)	REACTION AT ENDS (LBS)	DESIGN PRESSURE (PSF)	REACTION AT ENDS (LBS)	DESIGN PRESSURE (PSF)	REACTION AT ENDS (LBS)	DESIGN PRESSURE (PSF)	REACTION AT ENDS (LBS)	DESIGN PRESSURE (PSF)	REACTION AT ENDS (LBS)	DESIGN PRESSURE (PSF)	REACTION AT ENDS (LBS)	DESIGN PRESSURE (PSF)	REACTION AT ENDS (LBS)	DESIGN PRESSURE (PSF)	REACTION AT ENDS (LBS)	DESIGN PRESSURE (PSF)	REACTION AT ENDS (LBS)	DESIGN PRESSURE (PSF)	REACTION AT ENDS (LBS)	DESIGN PRESSURE (PSF)	REACTION AT ENDS (LBS)
120"	106.0	883.0	83.7	883.0	69.1	883.0	58.9	883.0	51.3	883.0	45.4	883.0	40.8	883.0	37.0	883.0	33.8	883.0	31.2	883.0	28.9	883.0	27.9	883.0
108"	120.0	900.0	104.1	989.3	86.0	989.3	73.3	989.3	63.8	989.3	56.5	989.3	50.7	989.3	46.0	989.3	42.1	989.3	38.8	989.3	36.0	989.3	34.7	989.3
96"	120.0	800.0	120.0	1013.3	109.8	1122.7	93.6	1122.7	81.5	1122.7	72.2	1122.7	64.8	1122.7	58.7	1122.7	53.7	1122.7	49.5	1122.7	45.9	1122.7	44.3	1122.7
84"	120.0	700.0	120.0	886.7	120.0	1073.3	120.0	1260.0	107.4	1295.0	95.1	1295.0	85.4	1295.0	77.4	1295.0	70.9	1295.0	65.3	1295.0	60.5	1295.0	58.4	1295.0
72"	120.0	600.0	120.0	760.0	120.0	920.0	120.0	1080.0	120.0	1240.0	120.0	1400.0	117.4	1525.7	106.4	1525.7	97.4	1525.7	89.7	1525.7	83.2	1525.7	80.3	1525.7
60"	120.0	500.0	120.0	633.3	120.0	766.7	120.0	900.0	120.0	1033.3	120.0	1166.7	120.0	1300.0	120.0	1433.3	120.0	1566.7	120.0	1700.0	120.0	1833.3	116.9	1850.2
48"	120.0	400.0	120.0	506.7	120.0	613.3	120.0	720.0	120.0	826.7	120.0	933.3	120.0	1040.0	120.0	1146.7	120.0	1253.3	120.0	1360.0	120.0	1466.7	120.0	1520.0
36"	120.0	300.0	120.0	380.0	120.0	460.0	120.0	540.0	120.0	620.0	120.0	700.0	120.0	780.0	120.0	860.0	120.0	940.0	120.0	1020.0	120.0	1100.0	120.0	1140.0

HEADER SCHEDULE: 2"x6"x1/4" HEADER

HEADER LENGTH	STORM BAR HEIGHT 60"		76"		92"		108"		124"		140"		156"		172"		188"		204"		220"		228"	
	DESIGN PRESSURE (PSF)	REACTION AT ENDS (LBS)	DESIGN PRESSURE (PSF)	REACTION AT ENDS (LBS)	DESIGN PRESSURE (PSF)	REACTION AT ENDS (LBS)	DESIGN PRESSURE (PSF)	REACTION AT ENDS (LBS)	DESIGN PRESSURE (PSF)	REACTION AT ENDS (LBS)	DESIGN PRESSURE (PSF)	REACTION AT ENDS (LBS)	DESIGN PRESSURE (PSF)	REACTION AT ENDS (LBS)	DESIGN PRESSURE (PSF)	REACTION AT ENDS (LBS)	DESIGN PRESSURE (PSF)	REACTION AT ENDS (LBS)	DESIGN PRESSURE (PSF)	REACTION AT ENDS (LBS)	DESIGN PRESSURE (PSF)	REACTION AT ENDS (LBS)	DESIGN PRESSURE (PSF)	REACTION AT ENDS (LBS)
228"	29.2	462.3																						
216"	34.3	515.1	27.1	515.1																				
204"	40.8	577.5	32.2	577.5	26.6	577.5																		
192"	48.9	652.0	38.6	652.0	31.9	652.0	27.2	652.0																
180"	59.3	741.8	46.9	741.8	38.7	741.8	33.0	741.8	28.7	741.8	25.4	741.8												
168"	73.0	851.6	57.6	851.6	47.6	851.6	40.6	851.6	35.3	851.6	31.3	851.6	28.1	851.6	25.5	851.6								
156"	91.2	987.6	72.0	987.6	59.5	987.6	50.6	987.6	44.1	987.6	39.1	987.6	35.1	987.6	31.8	987.6	29.1	987.6	26.8	987.6				
144"	115.9	1159.1	91.5	1159.1	75.6	1159.1	64.4	1159.1	56.1	1159.1	49.7	1159.1	44.6	1159.1	40.4	1159.1	37.0	1159.1	34.1	1159.1	31.6	1159.1	30.5	1159.1
132"	120.0	1100.0	118.8	1379.4	98.1	1379.4	83.6	1379.4	72.8	1379.4	64.5	1379.4	57.9	1379.4	52.5	1379.4	48.0	1379.4	44.3	1379.4	41.0	1379.4	39.6	1379.4
120"	120.0	1000.0	120.0	1266.7	120.0	1533.3	111.3	1669.0	96.9	1669.0	85.8	1669.0	77.0	1669.0	69.9	1669.0	63.9	1669.0	58.9	1669.0	54.6	1669.0	52.7	1669.0
108"	120.0	900.0	120.0	1140.0	120.0	1380.0	120.0	1620.0	120.0	1860.0	117.7	2060.5	105.7	2060.5	95.8	2060.5	87.7	2060.5	80.8	2060.5	74.9	2060.5	72.3	2060.5
96"	120.0	800.0	120.0	1013.3	120.0	1226.7	120.0	1440.0	120.0	1653.3	120.0	1866.7	120.0	2080.0	120.0	2293.3	120.0	2506.7	115.1	2607.9	106.7	2607.9	102.9	2607.9

HEADER SCHEDULE: 3"x3"x1/8" HEADER

HEADER LENGTH	STORM BAR HEIGHT 60"		72"		84"		96"		108"		120"		132"		144"		156"		168"		180"		192"	
	DESIGN PRESSURE (PSF)	REACTION AT ENDS (LBS)	DESIGN PRESSURE (PSF)	REACTION AT ENDS (LBS)	DESIGN PRESSURE (PSF)	REACTION AT ENDS (LBS)	DESIGN PRESSURE (PSF)	REACTION AT ENDS (LBS)	DESIGN PRESSURE (PSF)	REACTION AT ENDS (LBS)	DESIGN PRESSURE (PSF)	REACTION AT ENDS (LBS)	DESIGN PRESSURE (PSF)	REACTION AT ENDS (LBS)	DESIGN PRESSURE (PSF)	REACTION AT ENDS (LBS)	DESIGN PRESSURE (PSF)	REACTION AT ENDS (LBS)	DESIGN PRESSURE (PSF)	REACTION AT ENDS (LBS)	DESIGN PRESSURE (PSF)	REACTION AT ENDS (LBS)	DESIGN PRESSURE (PSF)	REACTION AT ENDS (LBS)
120"	26.1	217.8																						
108"	35.9	268.9	29.9	268.9	25.6	268.9																		
96"	51.1	340.3	42.5	340.3	36.5	340.3	31.9	340.3	28.4	340.3	25.5	340.3												
84"	76.2	444.5	63.5	444.5	54.4	444.5	47.6	444.5	42.3	444.5	38.1	444.5	34.6	444.5	31.8	444.5	29.3	444.5	27.2	444.5	25.4	444.5		
72"	120.0	600.0	100.8	605.0	86.4	605.0	75.6	605.0	67.2	605.0	60.5	605.0	55.0	605.0	50.4	605.0	46.5	605.0	43.2	605.0	40.3	605.0	37.8	605.0
60"	120.0	500.0	120.0	600.0	120.0	700.0	120.0	800.0	116.2	871.3	104.6	871.3	95.0	871.3	87.1	871.3	80.4	871.3	74.7	871.3	69.7	871.3	65.3	871.3
48"	120.0	400.0	120.0	480.0	120.0	560.0	120.0	640.0	120.0	720.0	120.0	800.0	120.0	880.0	120.0	960.0	120.0	1040.0	119.3	1113.4	111.3	1113.4	104.4	1113.4
36"	120.0	300.0	120.0	360.0	120.0	420.0	120.0	480.0	120.0	540.0	120.0	600.0	120.0	660.0	120.0	720.0	120.0	780.0	120.0	840.0	120.0	900.0	120.0	960.0

HEADER SCHEDULE: 3"x3"x1/4" HEADER

HEADER LENGTH	STORM BAR HEIGHT 60"		72"		84"		96"		108"		120"		132"		144"		156"		168"		180"		192"	
	DESIGN PRESSURE (PSF)	REACTION AT ENDS (LBS)	DESIGN PRESSURE (PSF)	REACTION AT ENDS (LBS)	DESIGN PRESSURE (PSF)	REACTION AT ENDS (LBS)	DESIGN PRESSURE (PSF)	REACTION AT ENDS (LBS)	DESIGN PRESSURE (PSF)	REACTION AT ENDS (LBS)	DESIGN PRESSURE (PSF)	REACTION AT ENDS (LBS)	DESIGN PRESSURE (PSF)	REACTION AT ENDS (LBS)	DESIGN PRESSURE (PSF)	REACTION AT ENDS (LBS)	DESIGN PRESSURE (PSF)	REACTION AT ENDS (LBS)	DESIGN PRESSURE (PSF)	REACTION AT ENDS (LBS)	DESIGN PRESSURE (PSF)	REACTION AT ENDS (LBS)	DESIGN PRESSURE (PSF)	REACTION AT ENDS (LBS)
120"	46.0	383.7	38.4	383.7	32.9	383.7	28.8	383.7	25.6	383.7														
108"	63.2	473.7	52.6	473.7	45.1	473.7	39.5	473.7	35.1	473.7	31.6	473.7	28.7	473.7	26.3	473.7								
96"	89.9	599.5	74.9	599.5	64.2	599.5	56.2	599.5	50.0	599.5	45.0	599.5	40.9	599.5	37.5	599.5	34.6	599.5	32.1	599.5	30.0	599.5	28.1	599.5
84"	120.0	700.0	111.9	783.0	95.9	783.0	83.9	783.0	74.6	783.0	67.1	783.0	61.0	783.0	55.9	783.0	51.6	783.0	47.9	783.0	44.7	783.0	41.9	783.0
72"	120.0	600.0	120.0	720.0	120.0	840.0	120.0	960.0	118.4	1065.7	106.6	1065.7	96.9	1065.7	88.8	1065.7	82.0	1065.7	76.1	1065.7	71.0	1065.7	66.6	1065.7
60"	120.0	500.0	120.0	600.0	120.0	700.0	120.0	800.0	120.0	900.0	120.0	1000.0	120.0	1100.0	120.0	1200.0	120.0	1300.0	120.0	1400.0	120.0	1500.0	115.1	1534.7
48"	120.0	400.0	120.0	480.0	120.0	560.0	120.0	640.0	120.0	720.0	120.0	800.0	120.0	880.0	120.0	960.0	120.0	1040.0	120.0	1120.0	120.0	1200.0	120.0	1280.0
36"	120.0	300.0	120.0	360.0	120.0	420.0	120.0	480.0	120.0	540.0	120.0	600.0	120.0	660.0	120.0	720.0	120.0	780.0	120.0	840.0	120.0	900.0	120.0	960.0

SEE SHEET 12 FOR
HEADER SCHEDULE NOTES.

FRANK L. BENNARDO, P.E.
160 SW 12th AVENUE, #106
DEERFIELD BEACH, FL 33442
PH: (954) 354-0660 FAX: (954) 354-0443
POWERED BY THE INNOVATORS OF ENGINEERING EXPRESS
EXPERIENCE MORE AT WWW.ENGEXP.COM
CERT OF AUTH. #F-11383
06/05/2013

Town & Country INDUSTRIES
Wholesale Aluminum and Building Products
A Division of ABC Supply Co., Inc.
400 WEST MCNAB ROAD
FT. LAUDERDALE, FL 33309

REMARKS	DRWN	CHKD	DATE
INIT ISSUE	KL	FLB	05/30/13

THIS DOCUMENT IS THE PROPERTY OF FRANK L. BENNARDO, P.E. AND SHALL NOT BE REPRODUCED IN WHOLE OR PART WITHOUT WRITTEN CONSENT OF FRANK L. BENNARDO, P.E. ALTERATIONS, ADDITIONS, HIGHLIGHTING, OR OTHER MARKINGS TO THIS DOCUMENT ARE NOT PERMITTED AND INVALIDATE OUR CERTIFICATION.
COPYRIGHT FRANK L. BENNARDO P.E.

13-TCM-02b
SCALE: - 01
PAGE DESCRIPTION:
-
-

C:\Documents and Settings\keithl\My Documents\Dropbox\Work Stuff\Town And Country Maestro TDI\13-TCM-02 Maestroshield Roll-Up (TDI)\13-TCM-02b_01a Mullion, Storm Bar, Header.dwg
06/05/2013 - 12:22pm keithl

HEADER SCHEDULE: 4"x4"x1/8" HEADER

HEADER LENGTH	STORM BAR HEIGHT 60"		76"		92"		108"		124"		140"		156"		172"		188"		204"		220"		228"	
	DESIGN PRESSURE (PSF)	REACTION AT ENDS (LBS)	DESIGN PRESSURE (PSF)	REACTION AT ENDS (LBS)	DESIGN PRESSURE (PSF)	REACTION AT ENDS (LBS)	DESIGN PRESSURE (PSF)	REACTION AT ENDS (LBS)	DESIGN PRESSURE (PSF)	REACTION AT ENDS (LBS)	DESIGN PRESSURE (PSF)	REACTION AT ENDS (LBS)	DESIGN PRESSURE (PSF)	REACTION AT ENDS (LBS)	DESIGN PRESSURE (PSF)	REACTION AT ENDS (LBS)	DESIGN PRESSURE (PSF)	REACTION AT ENDS (LBS)	DESIGN PRESSURE (PSF)	REACTION AT ENDS (LBS)	DESIGN PRESSURE (PSF)	REACTION AT ENDS (LBS)	DESIGN PRESSURE (PSF)	REACTION AT ENDS (LBS)
120"	63.9	532.9	50.5	532.9	41.7	532.9	35.5	532.9	30.9	532.9	27.4	532.9												
108"	87.7	657.9	69.2	657.9	57.2	657.9	48.7	657.9	42.4	657.9	37.6	657.9	33.7	657.9	30.6	657.9	28.0	657.9	25.8	657.9				
96"	120.0	800.0	98.6	832.6	81.5	832.6	69.4	832.6	60.4	832.6	53.5	832.6	48.0	832.6	43.6	832.6	39.9	832.6	36.7	832.6	34.1	832.6	32.9	832.6
84"	120.0	700.0	120.0	886.7	120.0	1073.3	103.6	1087.5	90.2	1087.5	79.9	1087.5	71.7	1087.5	65.0	1087.5	59.5	1087.5	54.8	1087.5	50.8	1087.5	49.1	1087.5
72"	120.0	600.0	120.0	760.0	120.0	920.0	120.0	1080.0	120.0	1240.0	116.7	1361.9	104.8	1361.9	95.0	1361.9	86.9	1361.9	80.1	1361.9	74.3	1361.9	71.7	1361.9
60"	120.0	500.0	120.0	633.3	120.0	766.7	120.0	900.0	120.0	1033.3	120.0	1166.7	120.0	1300.0	120.0	1433.3	120.0	1566.7	115.4	1634.3	107.0	1634.3	103.2	1634.3
48"	120.0	400.0	120.0	506.7	120.0	613.3	120.0	720.0	120.0	826.7	120.0	933.3	120.0	1040.0	120.0	1146.7	120.0	1253.3	120.0	1360.0	120.0	1466.7	120.0	1520.0
36"	120.0	300.0	120.0	380.0	120.0	460.0	120.0	540.0	120.0	620.0	120.0	700.0	120.0	780.0	120.0	860.0	120.0	940.0	120.0	1020.0	120.0	1100.0	120.0	1140.0

HEADER SCHEDULE: 4"x4"x1/4" HEADER

HEADER LENGTH	STORM BAR HEIGHT 60"		76"		92"		108"		124"		140"		156"		172"		188"		204"		220"		228"	
	DESIGN PRESSURE (PSF)	REACTION AT ENDS (LBS)	DESIGN PRESSURE (PSF)	REACTION AT ENDS (LBS)	DESIGN PRESSURE (PSF)	REACTION AT ENDS (LBS)	DESIGN PRESSURE (PSF)	REACTION AT ENDS (LBS)	DESIGN PRESSURE (PSF)	REACTION AT ENDS (LBS)	DESIGN PRESSURE (PSF)	REACTION AT ENDS (LBS)	DESIGN PRESSURE (PSF)	REACTION AT ENDS (LBS)	DESIGN PRESSURE (PSF)	REACTION AT ENDS (LBS)	DESIGN PRESSURE (PSF)	REACTION AT ENDS (LBS)	DESIGN PRESSURE (PSF)	REACTION AT ENDS (LBS)	DESIGN PRESSURE (PSF)	REACTION AT ENDS (LBS)	DESIGN PRESSURE (PSF)	REACTION AT ENDS (LBS)
120"	116.3	969.2	91.8	969.2	75.8	969.2	64.6	969.2	56.3	969.2	49.8	969.2	44.7	969.2	40.6	969.2	37.1	969.2	34.2	969.2	31.7	969.2	30.6	969.2
108"	120.0	900.0	120.0	1140.0	104.0	1196.5	88.6	1196.5	77.2	1196.5	68.4	1196.5	61.4	1196.5	55.7	1196.5	50.9	1196.5	46.9	1196.5	43.5	1196.5	42.0	1196.5
96"	120.0	800.0	120.0	1013.3	120.0	1226.7	120.0	1440.0	109.9	1514.3	97.4	1514.3	87.4	1514.3	79.2	1514.3	72.5	1514.3	66.8	1514.3	62.0	1514.3	59.8	1514.3
84"	120.0	700.0	120.0	886.7	120.0	1073.3	120.0	1260.0	120.0	1446.7	120.0	1633.3	120.0	1820.0	118.3	1977.9	108.2	1977.9	99.7	1977.9	92.5	1977.9	89.2	1977.9
72"	120.0	600.0	120.0	760.0	120.0	920.0	120.0	1080.0	120.0	1240.0	120.0	1400.0	120.0	1560.0	120.0	1720.0	120.0	1880.0	120.0	2040.0	120.0	2200.0	120.0	2280.0
60"	120.0	500.0	120.0	633.3	120.0	766.7	120.0	900.0	120.0	1033.3	120.0	1166.7	120.0	1300.0	120.0	1433.3	120.0	1566.7	120.0	1700.0	120.0	1833.3	120.0	1900.0
48"	120.0	400.0	120.0	506.7	120.0	613.3	120.0	720.0	120.0	826.7	120.0	933.3	120.0	1040.0	120.0	1146.7	120.0	1253.3	120.0	1360.0	120.0	1466.7	120.0	1520.0
36"	120.0	300.0	120.0	380.0	120.0	460.0	120.0	540.0	120.0	620.0	120.0	700.0	120.0	780.0	120.0	860.0	120.0	940.0	120.0	1020.0	120.0	1100.0	120.0	1140.0

HEADER SCHEDULE: 4"x6"x1/4" HEADER

HEADER LENGTH	STORM BAR HEIGHT 60"		76"		92"		108"		124"		140"		156"		172"		188"		204"		220"		228"	
	DESIGN PRESSURE (PSF)	REACTION AT ENDS (LBS)	DESIGN PRESSURE (PSF)	REACTION AT ENDS (LBS)	DESIGN PRESSURE (PSF)	REACTION AT ENDS (LBS)	DESIGN PRESSURE (PSF)	REACTION AT ENDS (LBS)	DESIGN PRESSURE (PSF)	REACTION AT ENDS (LBS)	DESIGN PRESSURE (PSF)	REACTION AT ENDS (LBS)	DESIGN PRESSURE (PSF)	REACTION AT ENDS (LBS)	DESIGN PRESSURE (PSF)	REACTION AT ENDS (LBS)	DESIGN PRESSURE (PSF)	REACTION AT ENDS (LBS)	DESIGN PRESSURE (PSF)	REACTION AT ENDS (LBS)	DESIGN PRESSURE (PSF)	REACTION AT ENDS (LBS)	DESIGN PRESSURE (PSF)	REACTION AT ENDS (LBS)
228"	45.1	713.9	35.6	713.9	29.4	713.9	25.0	713.9																
216"	53.0	795.4	41.9	795.4	34.6	795.4	29.5	795.4	25.7	795.4														
204"	62.9	891.7	49.7	891.7	41.1	891.7	35.0	891.7	30.5	891.7	27.0	891.7												
192"	75.5	1006.7	59.6	1006.7	49.2	1006.7	41.9	1006.7	36.5	1006.7	32.4	1006.7	29.0	1006.7	26.3	1006.7								
180"	91.6	1145.3	72.3	1145.3	59.8	1145.3	50.9	1145,3	44.3	1145.3	39.3	1145.3	35.2	1145.3	32.0	1145.3	29.2	1145.3	26.9	1145.3				
168"	112.7	1314.8	89.0	1314.8	73.5	1314.8	62.6	1314.8	54.5	1314.8	48.3	1314.8	43.3	1314.8	39.3	1314.8	36.0	1314.8	33.1	1314.8	30.7	1314.8	29.7	1314.8
156"	120.0	1300.0	111.1	1524.9	91.8	1524.9	78.2	1524.9	68.1	1524.9	60.3	1524.9	54.1	1524.9	49.1	1524.9	44.9	1524.9	41.4	1524.9	38.4	1524.9	37.0	1524.9
144"	120.0	1200.0	120.0	1520.0	116.7	1789.6	99.4	1789.6	86.6	1789.6	76.7	1789.6	68.8	1789.6	62.4	1789.6	57.1	1789.6	52.6	1789.6	48.8	1789.6	47.1	1789.6
132"	120.0	1100.0	120.0	1393.3	120.0	1686.7	120.0	1980.0	112.4	2129.8	99.6	2129.8	89.4	2129.8	81.0	2129.8	74.2	2129.8	68.3	2129.8	63.4	2129.8	61.1	2129.8
120"	120.0	1000.0	120.0	1266.7	120.0	1533.3	120.0	1800.0	120.0	2066.7	120.0	2333.3	118.9	2577.0	107.9	2577.0	98.7	2577.0	91.0	2577.0	84.3	2577.0	81.4	2577.0
108"	120.0	900.0	120.0	1140.0	120.0	1380.0	120.0	1620.0	120.0	1860.0	120.0	2100.0	120.0	2340.0	120.0	2580.0	120.0	2820.0	120.0	3060.0	115.7	3181.5	111.6	3181.5
96"	120.0	800.0	120.0	1013.3	120.0	1226.7	120.0	1440.0	120.0	1653.3	120.0	1866.7	120.0	2080.0	120.0	2293.3	120.0	2506.7	120.0	2720.0	120.0	2933.3	120.0	3040.0
84"	120.0	700.0	120.0	886.7	120.0	1073.3	120.0	1260.0	120.0	1446.7	120.0	1633.3	120.0	1820.0	120.0	2006.7	120.0	2193.3	120.0	2380.0	120.0	2566.7	120.0	2660.0
72"	120.0	600.0	120.0	760.0	120.0	920.0	120.0	1080.0	120.0	1240.0	120.0	1400.0	120.0	1560.0	120.0	1720.0	120.0	1880.0	120.0	2040.0	120.0	2200.0	120.0	2280.0
60"	120.0	500.0	120.0	633.3	120.0	766.7	120.0	900.0	120.0	1033.3	120.0	1166.7	120.0	1300.0	120.0	1433.3	120.0	1566.7	120.0	1700.0	120.0	1833.3	120.0	1900.0
48"	120.0	400.0	120.0	506.7	120.0	613.3	120.0	720.0	120.0	826.7	120.0	933.3	120.0	1040.0	120.0	1146.7	120.0	1253.3	120.0	1360.0	120.0	1466.7	120.0	1520.0
36"	120.0	300.0	120.0	380.0	120.0	460.0	120.0	540.0	120.0	620.0	120.0	700.0	120.0	780.0	120.0	860.0	120.0	940.0	120.0	1020.0	120.0	1100.0	120.0	1140.0

SEE SHEET 12 FOR HEADER SCHEDULE NOTES.

FRANK L. BENNARDO, P.E.
160 SW 12th AVENUE, #106
DEERFIELD BEACH, FL 33442
PH: (954) 354-0660 FAX: (954) 354-0443
POWERED BY THE INNOVATIONS OF ENGINEERING EXPRESS®
EXPERIENCE MORE AT WWW.ENGEXP.COM

Town & Country INDUSTRIES
Wholesale Aluminum and Building Products
A Division of ABC Supply Co., Inc.
400 WEST MCNAB ROAD
FT. LAUDERDALE, FL 33309

REMARKS	DRWN	CHKD	DATE
INIT ISSUE	KL	FLB	05/30/13

COPYRIGHT FRANK L. BENNARDO P.E.

13-TCM-02b

SCALE: - 01

PAGE DESCRIPTION:
-
-

C:\Documents and Settings\keith\My Documents\Dropbox\Work Stuff\Town And Country Maestro TDI\13-TCM-02 Maestroshield Roll-Up (TDI)\13-TCM-02b_01a Mullion, Storm Bar, Header.dwg
keith
06/05/2013 - 12:22pm

HEADER SCHEDULE: 4"x8"x1/4" HEADER

HEADER LENGTH	STORM BAR HEIGHT 60"		76"		92"		108"		124"		140"		156"		172"		188"		204"		220"		228"	
	DESIGN PRESSURE (PSF)	REACTION AT ENDS (LBS)	DESIGN PRESSURE (PSF)	REACTION AT ENDS (LBS)	DESIGN PRESSURE (PSF)	REACTION AT ENDS (LBS)	DESIGN PRESSURE (PSF)	REACTION AT ENDS (LBS)	DESIGN PRESSURE (PSF)	REACTION AT ENDS (LBS)	DESIGN PRESSURE (PSF)	REACTION AT ENDS (LBS)	DESIGN PRESSURE (PSF)	REACTION AT ENDS (LBS)	DESIGN PRESSURE (PSF)	REACTION AT ENDS (LBS)	DESIGN PRESSURE (PSF)	REACTION AT ENDS (LBS)	DESIGN PRESSURE (PSF)	REACTION AT ENDS (LBS)	DESIGN PRESSURE (PSF)	REACTION AT ENDS (LBS)	DESIGN PRESSURE (PSF)	REACTION AT ENDS (LBS)
228"	91.5	1448.2	91.5	1448.2	91.5	1448.2	91.5	1448.2	91.5	1448.2	91.5	1448.2	91.5	1448.2	91.5	1448.2	91.5	1448.2	91.5	1448.2	91.5	1448.2	91.5	1448.2
216"	107.6	1613.5	107.6	1613.5	107.6	1613.5	107.6	1613.5	107.6	1613.5	107.6	1613.5	107.6	1613.5	107.6	1613.5	107.6	1613.5	107.6	1613.5	107.6	1613.5	107.6	1613.5
204"	120.0	1700.0	120.0	1700.0	120.0	1700.0	120.0	1700.0	120.0	1700.0	120.0	1700.0	120.0	1700.0	120.0	1700.0	120.0	1700.0	120.0	1700.0	120.0	1700.0	120.0	1700.0
192"	120.0	1600.0	120.0	1600.0	120.0	1600.0	120.0	1600.0	120.0	1600.0	120.0	1600.0	120.0	1600.0	120.0	1600.0	120.0	1600.0	120.0	1600.0	120.0	1600.0	120.0	1600.0
180"	120.0	1500.0	120.0	1500.0	120.0	1500.0	120.0	1500.0	120.0	1500.0	120.0	1500.0	120.0	1500.0	120.0	1500.0	120.0	1500.0	120.0	1500.0	120.0	1500.0	120.0	1500.0
168"	120.0	1400.0	120.0	1400.0	120.0	1400.0	120.0	1400.0	120.0	1400.0	120.0	1400.0	120.0	1400.0	120.0	1400.0	120.0	1400.0	120.0	1400.0	120.0	1400.0	120.0	1400.0
156"	120.0	1300.0	120.0	1300.0	120.0	1300.0	120.0	1300.0	120.0	1300.0	120.0	1300.0	120.0	1300.0	120.0	1300.0	120.0	1300.0	120.0	1300.0	120.0	1300.0	120.0	1300.0
144"	120.0	1200.0	120.0	1200.0	120.0	1200.0	120.0	1200.0	120.0	1200.0	120.0	1200.0	120.0	1200.0	120.0	1200.0	120.0	1200.0	120.0	1200.0	120.0	1200.0	120.0	1200.0
132"	120.0	1100.0	120.0	1100.0	120.0	1100.0	120.0	1100.0	120.0	1100.0	120.0	1100.0	120.0	1100.0	120.0	1100.0	120.0	1100.0	120.0	1100.0	120.0	1100.0	120.0	1100.0
120"	120.0	1000.0	120.0	1000.0	120.0	1000.0	120.0	1000.0	120.0	1000.0	120.0	1000.0	120.0	1000.0	120.0	1000.0	120.0	1000.0	120.0	1000.0	120.0	1000.0	120.0	1000.0
108"	120.0	900.0	120.0	900.0	120.0	900.0	120.0	900.0	120.0	900.0	120.0	900.0	120.0	900.0	120.0	900.0	120.0	900.0	120.0	900.0	120.0	900.0	120.0	900.0
96"	120.0	800.0	120.0	800.0	120.0	800.0	120.0	800.0	120.0	800.0	120.0	800.0	120.0	800.0	120.0	800.0	120.0	800.0	120.0	800.0	120.0	800.0	120.0	800.0
84"	120.0	700.0	120.0	700.0	120.0	700.0	120.0	700.0	120.0	700.0	120.0	700.0	120.0	700.0	120.0	700.0	120.0	700.0	120.0	700.0	120.0	700.0	120.0	700.0
72"	120.0	600.0	120.0	600.0	120.0	600.0	120.0	600.0	120.0	600.0	120.0	600.0	120.0	600.0	120.0	600.0	120.0	600.0	120.0	600.0	120.0	600.0	120.0	600.0
60"	120.0	500.0	120.0	500.0	120.0	500.0	120.0	500.0	120.0	500.0	120.0	500.0	120.0	500.0	120.0	500.0	120.0	500.0	120.0	500.0	120.0	500.0	120.0	500.0
48"	120.0	400.0	120.0	400.0	120.0	400.0	120.0	400.0	120.0	400.0	120.0	400.0	120.0	400.0	120.0	400.0	120.0	400.0	120.0	400.0	120.0	400.0	120.0	400.0
36"	120.0	300.0	120.0	300.0	120.0	300.0	120.0	300.0	120.0	300.0	120.0	300.0	120.0	300.0	120.0	300.0	120.0	300.0	120.0	300.0	120.0	300.0	120.0	300.0

HEADER SCHEDULE: 2"x4"x1/8" WITH 1.75"x3.75"x0.125" STEEL REINFORCEMENT*

HEADER LENGTH	STORM BAR HEIGHT 60"		76"		92"		108"		124"		140"		156"		172"		188"		204"		220"		228"	
	DESIGN PRESSURE (PSF)	REACTION AT ENDS (LBS)	DESIGN PRESSURE (PSF)	REACTION AT ENDS (LBS)	DESIGN PRESSURE (PSF)	REACTION AT ENDS (LBS)	DESIGN PRESSURE (PSF)	REACTION AT ENDS (LBS)	DESIGN PRESSURE (PSF)	REACTION AT ENDS (LBS)	DESIGN PRESSURE (PSF)	REACTION AT ENDS (LBS)	DESIGN PRESSURE (PSF)	REACTION AT ENDS (LBS)	DESIGN PRESSURE (PSF)	REACTION AT ENDS (LBS)	DESIGN PRESSURE (PSF)	REACTION AT ENDS (LBS)	DESIGN PRESSURE (PSF)	REACTION AT ENDS (LBS)	DESIGN PRESSURE (PSF)	REACTION AT ENDS (LBS)	DESIGN PRESSURE (PSF)	REACTION AT ENDS (LBS)
120"	48.3	402.2	38.1	402.2	31.5	402.2	26.8	402.2																
108"	66.2	496.5	52.3	496.5	43.2	496.5	36.8	496.5	32.0	496.5	28.4	496.5	25.5	496.5										
96"	94.3	628.4	74.4	628.4	61.5	628.4	52.4	628.4	45.6	628.4	40.4	628.4	36.3	628.4	32.9	628.4	30.1	628.4	27.7	628.4	25.7	628.4		
84"	120.0	700.0	111.1	820.8	91.8	820.8	78.2	820.8	68.1	820.8	60.3	820.8	54.1	820.8	49.1	820.8	44.9	820.8	41.4	820.8	38.4	820.8	37.0	820.8
72"	120.0	600.0	120.0	760.0	120.0	920.0	120.0	1080.0	108.1	1117.2	95.8	1117.2	85.9	1117.2	77.9	1117.2	71.3	1117.2	65.7	1117.2	60.9	1117.2	58.8	1117.2
60"	120.0	500.0	120.0	633.3	120.0	766.7	120.0	900.0	120.0	1033.3	120.0	1166.7	120.0	1300.0	120.0	1433.3	115.1	1503.1	106.1	1503.1	98.4	1503.1	94.9	1503.1
48"	120.0	400.0	120.0	506.7	120.0	613.3	120.0	720.0	120.0	826.7	120.0	933.3	120.0	1040.0	120.0	1146.7	120.0	1253.3	120.0	1360.0	120.0	1466.7	120.0	1520.0
36"	120.0	300.0	120.0	380.0	120.0	460.0	120.0	540.0	120.0	620.0	120.0	700.0	120.0	780.0	120.0	860.0	120.0	940.0	120.0	1020.0	120.0	1100.0	120.0	1140.0

HEADER SCHEDULE: 2"x5"x1/8" WITH 1.75"x4.75"x0.125" STEEL REINFORCEMENT*

HEADER LENGTH	STORM BAR HEIGHT 60"		76"		92"		108"		124"		140"		156"		172"		188"		204"		220"		228"	
	DESIGN PRESSURE (PSF)	REACTION AT ENDS (LBS)	DESIGN PRESSURE (PSF)	REACTION AT ENDS (LBS)	DESIGN PRESSURE (PSF)	REACTION AT ENDS (LBS)	DESIGN PRESSURE (PSF)	REACTION AT ENDS (LBS)	DESIGN PRESSURE (PSF)	REACTION AT ENDS (LBS)	DESIGN PRESSURE (PSF)	REACTION AT ENDS (LBS)	DESIGN PRESSURE (PSF)	REACTION AT ENDS (LBS)	DESIGN PRESSURE (PSF)	REACTION AT ENDS (LBS)	DESIGN PRESSURE (PSF)	REACTION AT ENDS (LBS)	DESIGN PRESSURE (PSF)	REACTION AT ENDS (LBS)	DESIGN PRESSURE (PSF)	REACTION AT ENDS (LBS)	DESIGN PRESSURE (PSF)	REACTION AT ENDS (LBS)
120"	84.4	703.1	66.6	703.1	55.0	703.1	46.9	703.1	40.8	703.1	36.2	703.1	32.5	703.1	29.4	703.1	26.9	703.1						
108"	115.7	868.1	91.4	868.1	75.5	868.1	64.3	868.1	56.0	868.1	49.6	868.1	44.5	868.1	40.4	868.1	36.9	868.1	34.0	868.1	31.6	868.1	30.5	868.1
96"	120.0	800.0	120.0	1013.3	107.5	1098.6	91.6	1098.6	79.7	1098.6	70.6	1098.6	63.4	1098.6	57.5	1098.6	52.6	1098.6	48.5	1098.6	44.9	1098.6	43.4	1098.6
84"	120.0	700.0	120.0	886.7	120.0	1073.3	120.0	1260.0	119.0	1435.0	105.4	1435.0	94.6	1435.0	85.8	1435.0	78.5	1435.0	72.4	1435.0	67.1	1435.0	64.7	1435.0
72"	120.0	600.0	120.0	760.0	120.0	920.0	120.0	1080.0	120.0	1240.0	120.0	1400.0	120.0	1560.0	120.0	1720.0	110.8	1735.2	102.1	1735.2	94.6	1735.2	91.3	1735.2
60"	120.0	500.0	120.0	633.3	120.0	766.7	120.0	900.0	120.0	1033.3	120.0	1166.7	120.0	1300.0	120.0	1433.3	120.0	1566.7	120.0	1700.0	120.0	1833.3	120.0	1900.0
48"	120.0	400.0	120.0	506.7	120.0	613.3	120.0	720.0	120.0	826.7	120.0	933.3	120.0	1040.0	120.0	1146.7	120.0	1253.3	120.0	1360.0	120.0	1466.7	120.0	1520.0
36"	120.0	300.0	120.0	380.0	120.0	460.0	120.0	540.0	120.0	620.0	120.0	700.0	120.0	780.0	120.0	860.0	120.0	940.0	120.0	1020.0	120.0	1100.0	120.0	1140.0

***NOTE**: STEEL REINFORCEMENT LENGTH SHALL BE A MINIMUM OF 90% THE MULLION LENGTH, LOCATED AT THE CENTER OF THE MULLION AND FASTENED IN PLACE WITH #14 18-8 SS OR COATED SAE GR. 5 STEEL SMS OR SDS AT 12" O.C. MAX STAGGERED ALONG THE FULL REINFORCEMENT LENGTH. (REFERENCE STEEL REINFORCEMENT DETAIL 1/2)

SEE SHEET 12 FOR HEADER SCHEDULE NOTES.

FRANK L. BENNARDO, P.E.
160 SW 12th AVENUE, #106
DEERFIELD BEACH, FL 33442
PH: (954) 354-0660 FAX: (954) 354-0443
POWERED BY THE INNOVATION OF
ENGINEERING EXPRESS
EXPERIENCE MORE AT WWW.ENGEXP.COM
CERT. OF REG. #F-11383

Town & Country INDUSTRIES
Wholesale Aluminum and Building Products
A Division of ABC Supply Co., Inc.
400 WEST MCNAB ROAD
FT. LAUDERDALE, FL 33309

REMARKS	DRWN	CHKD	DATE
INIT ISSUE	KL	FLB	05/30/13

COPYRIGHT FRANK L. BENNARDO P.E.

13-TCM-02b

SCALE: - 01

PAGE DESCRIPTION:
-
-

C:\Documents and Settings\keith\My Documents\Dropbox\Work Stuff\Town And Country Maestro TD\13-TCM-02 Maestroshield Roll-Up (TD)\13-TCM-02b_01a Mullion, Storm Bar, Header.dwg
06/05/2013 - 12:22pm keith

HEADER SCHEDULE: 2"x6"x1/8" WITH 1.75"x5.75"x0.125" STEEL REINFORCEMENT*

HEADER LENGTH	STORM BAR HEIGHT 60" DESIGN PRESSURE (PSF)	60" REACTION AT ENDS (LBS)	76" DESIGN PRESSURE (PSF)	76" REACTION AT ENDS (LBS)	92" DESIGN PRESSURE (PSF)	92" REACTION AT ENDS (LBS)	108" DESIGN PRESSURE (PSF)	108" REACTION AT ENDS (LBS)	124" DESIGN PRESSURE (PSF)	124" REACTION AT ENDS (LBS)	140" DESIGN PRESSURE (PSF)	140" REACTION AT ENDS (LBS)	156" DESIGN PRESSURE (PSF)	156" REACTION AT ENDS (LBS)	172" DESIGN PRESSURE (PSF)	172" REACTION AT ENDS (LBS)	188" DESIGN PRESSURE (PSF)	188" REACTION AT ENDS (LBS)	204" DESIGN PRESSURE (PSF)	204" REACTION AT ENDS (LBS)	220" DESIGN PRESSURE (PSF)	220" REACTION AT ENDS (LBS)	228" DESIGN PRESSURE (PSF)	228" REACTION AT ENDS (LBS)
120"	120.0	1000.0	105.9	1117.5	87.5	1117.5	74.5	1117.5	64.9	1117.5	57.5	1117.5	51.6	1117.5	46.8	1117.5	42.8	1117.5	39.4	1117.5	36.6	1117.5	35.3	1117.5
108"	120.0	900.0	120.0	1140.0	112.1	1289.4	95.5	1289.4	83.2	1289.4	73.7	1289.4	66.1	1289.4	60.0	1289.4	54.9	1289.4	50.6	1289.4	46.9	1289.4	45.2	1289.4
96"	120.0	800.0	120.0	1013.3	120.0	1226.7	120.0	1440.0	110.3	1519.8	97.7	1519.8	87.7	1519.8	79.5	1519.8	72.8	1519.8	67.0	1519.8	62.2	1519.8	60.0	1519.8
84"	120.0	700.0	120.0	886.7	120.0	1073.3	120.0	1260.0	120.0	1446.7	120.0	1633.3	120.0	1820.0	110.3	1844.9	100.9	1844.9	93.0	1844.9	86.3	1844.9	83.2	1844.9
72"	120.0	600.0	120.0	760.0	120.0	920.0	120.0	1080.0	120.0	1240.0	120.0	1400.0	120.0	1560.0	120.0	1720.0	120.0	1880.0	120.0	2040.0	120.0	2200.0	120.0	2280.0
60"	120.0	500.0	120.0	633.3	120.0	766.7	120.0	900.0	120.0	1033.3	120.0	1166.7	120.0	1300.0	120.0	1433.3	120.0	1566.7	120.0	1700.0	120.0	1833.3	120.0	1900.0
48"	120.0	400.0	120.0	506.7	120.0	613.3	120.0	720.0	120.0	826.7	120.0	933.3	120.0	1040.0	120.0	1146.7	120.0	1253.3	120.0	1360.0	120.0	1466.7	120.0	1520.0
36"	120.0	300.0	120.0	380.0	120.0	460.0	120.0	540.0	120.0	620.0	120.0	700.0	120.0	780.0	120.0	860.0	120.0	940.0	120.0	1020.0	120.0	1100.0	120.0	1140.0

HEADER SCHEDULE NOTES:

1. PRESSURES SHOWN IN "HEADER SCHEDULE" ARE MAXIMUM ALLOWABLE POSITIVE AND NEGATIVE DESIGN PRESSURES AT EACH RESPECTIVE HEADER LENGTH AND STORM BAR HEIGHT. DESIGN PRESSURES ARE APPLICABLE TO BOTH DOUBLE-SPAN AND TRIPLE-SPAN CONDITIONS.
2. "HEADER SCHEDULES" ARE APPLICABLE TO ALL HEADERS.
3. SEE SHEET 2 FOR HEADER AND REINFORCEMENT DETAIL AND MATERIALS.
4. ALLOWABLE DESIGN PRESSURES AND STORM BAR HEIGHTS INDICATED ARE FOR DETERMINING PERMISSIBLE HEADER LENGTHS ONLY. ACTUAL STORM BAR HEIGHT AND DESIGN PRESSURES SHALL NOT EXCEED THOSE INDICATED IN "STORM BAR AND MULLION SCHEDULES" AS APPLICABLE.
5. "REACTION AT ENDS" IS LISTED FOR EACH COMBINATION OF DESIGN LOAD, HEADER LENGTH, & STORM BAR HEIGHT. CHOOSE MOUNTING CONNECTIONS (PER APPLICABLE CONNECTION DETAILS HEREIN) THAT PROVIDES "CONNECTION CAPACITY" GREATER THAN OR EQUAL TO "REACTION AT ENDS" GIVEN ABOVE.
6. THIS SCHEDULE MAY BE USED FOR ALL MOUNTING CONDITIONS LISTED HEREIN.
7. DENOTES CONDITIONS NOT APPROVED FOR USE.

***NOTE**: STEEL REINFORCEMENT LENGTH SHALL BE A MINIMUM OF 90% THE MULLION LENGTH, LOCATED AT THE CENTER OF THE MULLION AND FASTENED IN PLACE WITH #14 18-8 SS OR COATED SAE GR. 5 STEEL SMS OR SDS AT 12" O.C. MAX STAGGERED ALONG THE FULL REINFORCEMENT LENGTH. (REFERENCE STEEL REINFORCEMENT DETAIL 1/2)

STORM BAR TO HEADER CONNECTION DETAILS

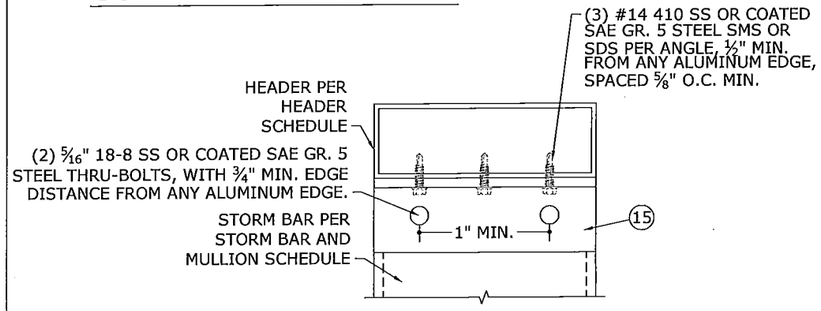

CONNECTION CAPACITY: 4262 LB

1/12 STORM BAR TO HEADER
N.T.S. VERT SECTION

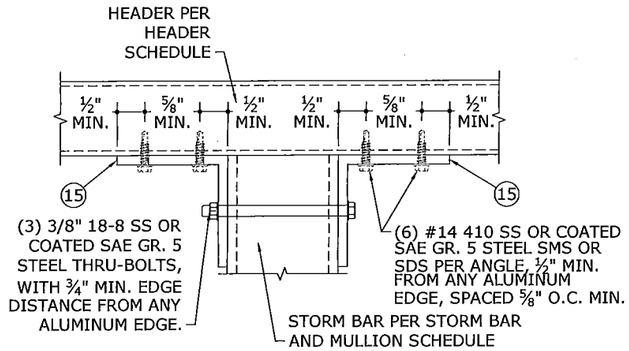

CONNECTION CAPACITY: 8524 LB

3/12 STORM BAR TO HEADER
N.T.S. VERT SECTION

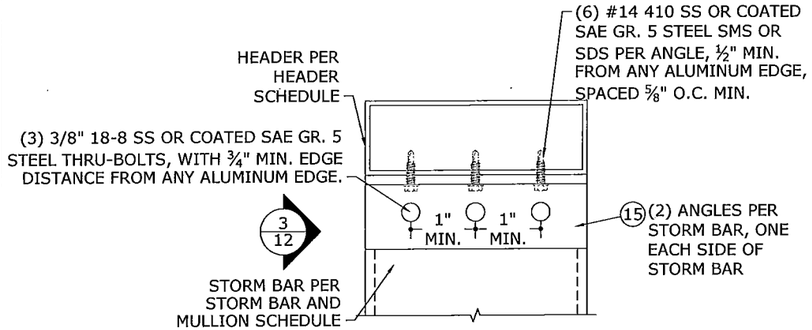

CONNECTION CAPACITY: 8524 LB

2/12 STORM BAR TO HEADER
N.T.S. VERT SECTION

FRANK L. BENNARDO P.E.
160 SW 12th AVENUE #106
DEERFIELD BEACH, FL 33442
Ph: (954) 354-0660 Fax: (954) 354-0665
POWERED BY THE INNOVATIONS OF ENGINEERING EXPRESS
EXPERIENCE MORE AT WWW.ENGEXP.COM

FRANK L. BENNARDO P.E. #36106 STATE OF FLORIDA PROFESSIONAL ENGINEER CERT OF REG. 06/05/2013

Town & Country INDUSTRIES
Wholesale Aluminum and Building Products
A Division of ABC Supply Co., Inc.
400 WEST MCNAB ROAD
FT. LAUDERDALE, FL 33309

REMARKS	DRWN	CHKD	DATE
INIT ISSUE	KL	FLB	05/30/13

THIS DOCUMENT IS THE PROPERTY OF FRANK L. BENNARDO, P.E. AND SHALL NOT BE REPRODUCED IN WHOLE OR PART WITHOUT WRITTEN CONSENT OF FRANK L. BENNARDO, P.E. - ALTERATIONS, ADDITIONS, HIGH LIGHTING, OR OTHER MARKINGS TO THIS DOCUMENT ARE NOT PERMITTED AND WILL BE CLAIMED AS FORGERY.
COPYRIGHT FRANK L. BENNARDO P.E.

13-TCM-02b
SCALE: - 01
PAGE DESCRIPTION:
-
-

12 OF 15

C:\Documents and Settings\keithl\My Documents\Dropbox\Work Stuff\Town And Country Maestro TDI\13-TCM-02 Maestroshield Roll-Up (TDI)\13-TCM-02b_01a Mullion, Storm Bar, Header.dwg
06/05/2013 - 12:22pm keithl

STORM BAR AND MULLION CONNECTION DETAILS

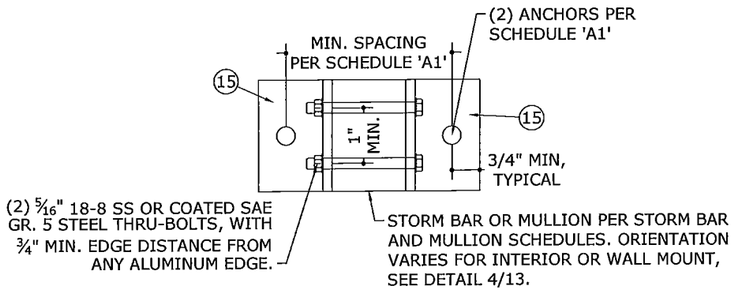

1/13 END CONNECTION INTERIOR OR WALL MOUNT

N.T.S.

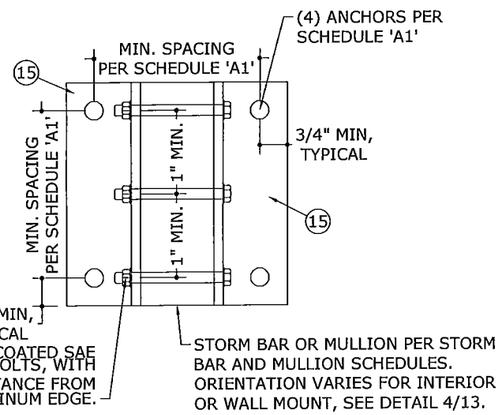

2/13 END CONNECTION INTERIOR OR WALL MOUNT

N.T.S.

- CLUSTER OF (4) 3/8" POWERS WEDGE BOLTS AT CENTERED EACH STORM BAR W/ 3½" MIN. EMBED, 3" MIN. EDGE DISTANCE, AND 4½" SPACING TO 3KSI MIN. CONCRETE. BALANCE SPACED AT 18" O.C. MAX
- CLUSTER OF (4) 5/16" ITW TAPCONS AT CENTERED EACH STORM BAR W/ 2-1/4" MIN. EMBED, 4" MIN. EDGE DISTANCE, AND 4" SPACING TO GROUT-FILLED CONCRETE BLOCK. BALANCE SPACED AT 18" O.C. MAX
- CLUSTER OF (4) 5/16" LAG SCREWS AT CENTERED EACH STORM BAR W/ 2" MIN. THREAD PENETRATION, 1-1/4" MIN. EDGE DISTANCE, AND 2" SPACING TO G=0.42 MIN. WOOD. BALANCE SPACED AT 18" O.C. MAX
-

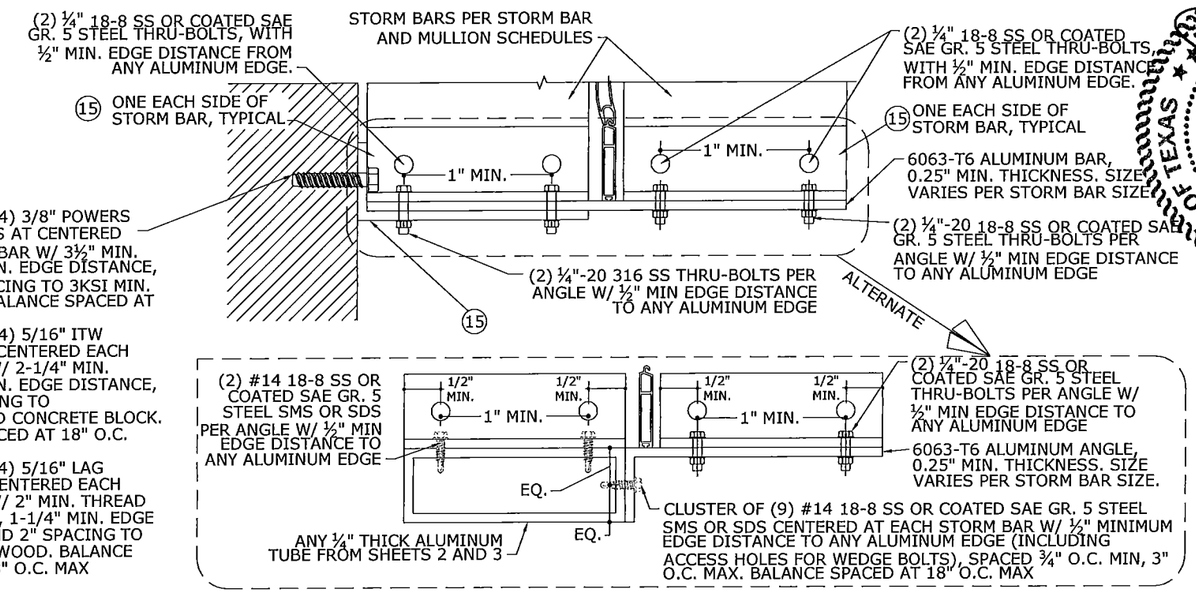

CONNECTION CAPACITY: 2276 LB

3/13 STORM BAR BUILD-OUT MOUNT

N.T.S.

VERT SECTION

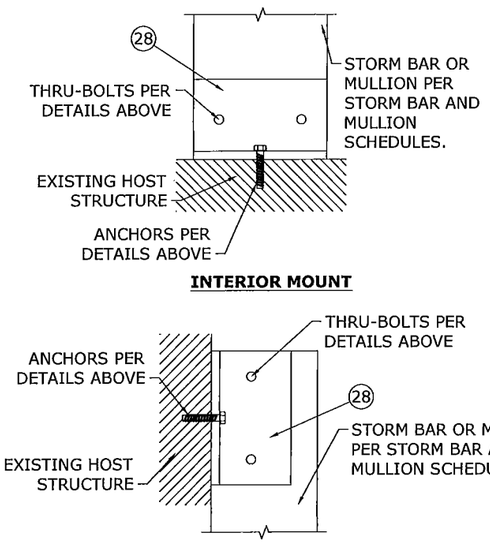

4/13 END CONNECTION MOUNTING CONDITIONS

N.T.S.

SCHEDULE 'A1'

ANCHOR TYPE	MINIMUM SPACING	MINIMUM EDGE DISTANCE	CONNECTION DETAIL	MOUNTING CONDITION	CONNECTION CAPACITY
3/8" POWERS WEDGE BOLTS W/ 3-1/2" EMBED TO 3KSI MIN. CONCRETE	4.5"	4.5"	1/13	WALL MOUNT	4332 LB
				INTERIOR MOUNT	3065 LB
			2/13	WALL MOUNT	8820 LB
				INTERIOR MOUNT	6130 LB
3/8" POWERS STEEL DROPIN W/ 1-9/16" EMBED TO 3KSI MIN. CONCRETE	4.5"	5.25"	1/13	WALL MOUNT	1590 LB
				INTERIOR MOUNT	2290 LB
			2/13	WALL MOUNT	3180 LB
				INTERIOR MOUNT	4580 LB
3/8" POWERS WEDGE BOLTS W/ 3-1/2" EMBED TO GROUT-FILLED CONCRETE BLOCK*	6.0"	12.0"	1/13	WALL MOUNT	2580 LB
				INTERIOR MOUNT	2200 LB
			2/13	WALL MOUNT	5160 LB
				INTERIOR MOUNT	4400 LB
5/16" ITW TAPCON XL OR ELCO ULTRACON W/ 2-1/4" MIN. EMBED TO 3.5KSI MIN. CONCRETE	5.0"	3.125"	1/13	WALL MOUNT	1576 LB
				INTERIOR MOUNT	1702 LB
			2/13	WALL MOUNT	3152 LB
				INTERIOR MOUNT	3404 LB
5/16" ITW TAPCON XL OR ELCO ULTRACON W/ 2-1/4" MIN. EMBED TO GROUT-FILLED CONCRETE BLOCK	5.0"	3.125"	1/13	WALL MOUNT	584 LB
				INTERIOR MOUNT	744 LB
			2/13	WALL MOUNT	1168 LB
				INTERIOR MOUNT	1488 LB
5/16" LAG SCREW W/ 2" MIN. THREAD PENETRATION TO G=0.42 MIN WOOD	2.0"	1.25"	1/13	WALL MOUNT	1310 LB
				INTERIOR MOUNT	302 LB
			2/13	WALL MOUNT	2620 LB
				INTERIOR MOUNT	604 LB

ANCHOR NOTES:

1. ANCHORS SHALL BE INSTALLED IN ACCORDANCE WITH MANUFACTURERS' RECOMMENDATIONS.
2. MINIMUM EMBEDMENT SHALL BE AS NOTED IN ANCHOR SCHEDULE. MINIMUM EMBEDMENT AND EDGE DISTANCE EXCLUDES STUCCO, FOAM, BRICK, AND OTHER WALL FINISHES.
3. ANCHOR SCHEDULE APPLIES TO ALL PRODUCTS CERTIFIED HEREIN.
4. WHERE EXISTING STRUCTURE IS WOOD FRAMING, EXISTING CONDITIONS MAY VARY. FIELD VERIFY THAT FASTENERS ARE INTO ADEQUATE WOOD FRAMING MEMBERS, NOT INTO PLYWOOD.
5. MACHINE SCREWS SHALL HAVE MINIMUM OF 5/8" ENGAGEMENT OF THREADS IN BASE ANCHOR AND MAY HAVE EITHER A PAN HEAD, TRUSS HEAD, OR WAFER HEAD ("SIDEWALK BOLT") U.N.O.
6. * ANCHOR SHALL PENETRATE THROUGH FACE SHELL INTO GROUTED CELL.

FRANK L. BENNARDO, P.E.
PE66864
06/05/2013
CERTIFICATE OF AUTH. #E-11883
STATE OF FLORIDA
FRANK L. BENNARDO, P.E.
160 SW 12th AVENUE, #106
DEERFIELD BEACH, FL 33442
PH: (954) 354-0660 FAX: (954) 354-0669
POWERED BY THE INNOVATORS
ENGINEERING EXPRESS
EXPERIENCE MORE AT WWW.ENGEXPRESS.COM

Town & Country INDUSTRIES
Wholesale Aluminum and Building Products
A Division of A&C Supply Co., Inc.
400 WEST MCNAB ROAD
FT. LAUDERDALE, FL 33309

REMARKS	DRWN	CHKD	DATE
INIT ISSUE	KL	FLB	05/30/13

THIS DOCUMENT IS THE PROPERTY OF FRANK L. BENNARDO, P.E AND SHALL NOT BE REPRODUCED IN WHOLE OR PART WITHOUT WRITTEN CONSENT OF FRANK L. BENNARDO, P.E. * ALTERATIONS, ADDITIONS, HIGHLIGHTING, OR OTHER MARKINGS TO THIS DOCUMENT WILL NOT BE PERMITTED UNLESS THEY ARE ACCEPTED BY THE ORIGINATOR.
COPYRIGHT FRANK L. BENNARDO P.E.

13-TCM-02b

SCALE: - 01

PAGE DESCRIPTION:

-

-

13 OF 15

06/05/2013 - 12:22pm keithl C:\Documents and Settings\keithl\My Documents\Dropbox\Work Stuff\Town And Country Maestro TDI\13-TCM-02 Maestroshield Roll-Up (TDI)\13-TCM-02b_01a Mullion, Storm Bar, Header.dwg

CONTINUOUSLY ANCHORED MULLION CONNECTION DETAILS

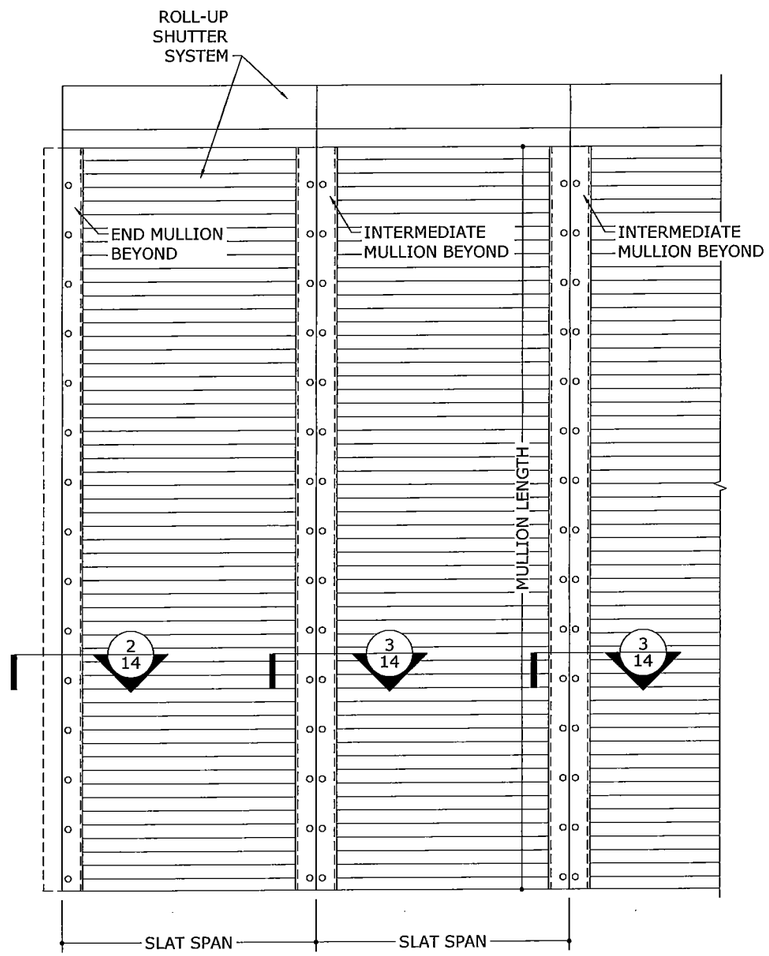

1/14 SHUTTER WITH MULLIONS ANCHORED CONTINUOUSLY

N.T.S. EXTERIOR ELEV

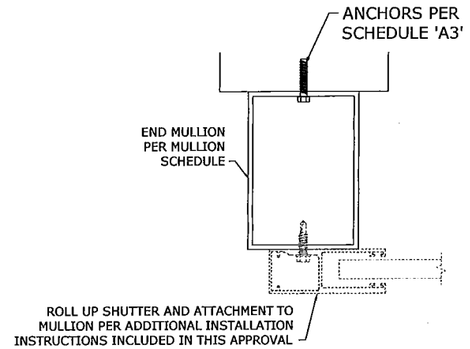

2/14 END MULLION CONTINUOUSLY ANCHORED

N.T.S. HORIZ SECTION

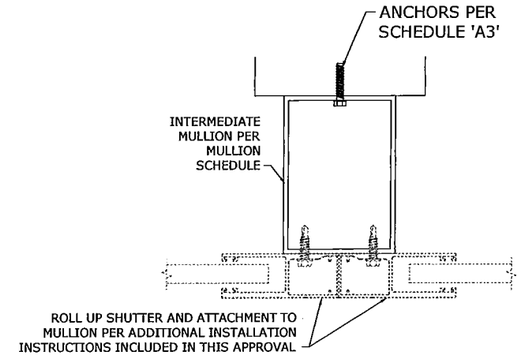

3/14 INTERMEDIATE MULLION CONTINUOUSLY ANCHORED

N.T.S. HORIZ SECTION

SCHEDULE 'A2'

SLAT SPAN	DESIGN PRESSURE (PSF)	REACTION ALONG LENGTH	
		END MULLION	INTERMEDIATE MULLION
30"	40	50 LB/FT	100 LB/FT
	60	75 LB/FT	150 LB/FT
	80	100 LB/FT	200 LB/FT
	100	125 LB/FT	250 LB/FT
	120	150 LB/FT	300 LB/FT
40"	40	67 LB/FT	133 LB/FT
	60	100 LB/FT	200 LB/FT
	80	133 LB/FT	267 LB/FT
	100	167 LB/FT	333 LB/FT
	120	200 LB/FT	400 LB/FT
50"	40	83 LB/FT	167 LB/FT
	60	125 LB/FT	250 LB/FT
	80	167 LB/FT	333 LB/FT
	100	208 LB/FT	417 LB/FT
	120	250 LB/FT	500 LB/FT
60"	40	100 LB/FT	200 LB/FT
	60	150 LB/FT	300 LB/FT
	80	200 LB/FT	400 LB/FT
	100	250 LB/FT	500 LB/FT
	120	300 LB/FT	600 LB/FT
70"	40	117 LB/FT	233 LB/FT
	60	175 LB/FT	350 LB/FT
	80	233 LB/FT	467 LB/FT
	100	292 LB/FT	583 LB/FT
	120	350 LB/FT	700 LB/FT
80"	40	133 LB/FT	267 LB/FT
	60	200 LB/FT	400 LB/FT
	80	267 LB/FT	533 LB/FT
	100	333 LB/FT	667 LB/FT
	120	400 LB/FT	800 LB/FT

SCHEDULE 'A3'

ANCHOR TYPE	MINIMUM EDGE DISTANCE	ANCHOR SPACING (ON CENTER)	CONNECTION CAPACITY
3/8" POWERS WEDGE BOLTS W/ 3-1/2" EMBED TO 3KSI MIN. CONCRETE	4.5"	12"	2205 LB/FT
		18"	1470 LB/FT
		24"	735 LB/FT
		30"	294 LB/FT
3/8" POWERS WEDGE BOLTS W/ 3-1/2" EMBED TO GROUT-FILLED CONCRETE BLOCK*	12.0"	12"	1290 LB/FT
		18"	860 LB/FT
		24"	430 LB/FT
		30"	172 LB/FT
3/8" POWERS STEEL DROPIN W/ 1-9/16" EMBED TO 3KSI MIN. CONCRETE	5.25"	12"	795 LB/FT
		18"	530 LB/FT
		24"	265 LB/FT
		30"	106 LB/FT
5/16" ITW TAPCON XL OR ELCO ULTRACON W/ 2-1/4" MIN. EMBED TO 3.5KSI MIN. CONCRETE	4.0"	12"	788 LB/FT
		18"	525 LB/FT
		24"	263 LB/FT
		30"	105 LB/FT
5/16" ITW TAPCON XL OR ELCO ULTRACON W/ 2-1/4" MIN. EMBED TO GROUT-FILLED CONCRETE BLOCK	3.125"	12"	292 LB/FT
		18"	195 LB/FT
		24"	97 LB/FT
		30"	39 LB/FT
5/16" LAG SCREW W/ 2" MIN. THREAD PENETRATION TO G=0.42 MIN WOOD	1.25"	12"	655 LB/FT
		18"	437 LB/FT
		24"	218 LB/FT
		30"	87 LB/FT

CONTINUOUSLY ANCHORED MULLION NOTES:

1. USE SCHEDULE 'A2' TO DETERMINE THE REACTION ALONG MULLION LENGTH FOR THE APPLICABLE SLAT SPAN AND DESIGN PRESSURE.
2. "REACTION ALONG LENGTH" IS LISTED FOR EACH COMBINATION OF DESIGN LOAD & SLAT SPAN. CHOOSE ANCHOR TYPE AND ANCHOR SPACING FROM SCHEDULE 'A3' THAT PROVIDES "CONNECTION CAPACITY" GREATER THAN OR EQUAL TO "REACTION ALONG LENGTH" GIVEN ABOVE IN SCHEDULE 'A2'.
3. SCHEDULES ARE APPLICABLE TO ALL NON-END RETENTION MULLIONS.
4. ALLOWABLE DESIGN PRESSURES AND SLAT SPANS INDICATED ARE FOR DETERMINING PERMISSIBLE MULLION ANCHORS ONLY. ACTUAL SLAT SPANS AND DESIGN PRESSURES SHALL NOT EXCEED THOSE INDICATED ROLL-UP SHUTTER INSTALLATION INSTRUCTIONS.
5. THIS SCHEDULE MAY BE USED FOR ALL NON-END RETENTION MULLIONS ANCHORED CONTINUOUSLY ALONG THEIR LENGTH.
6. SEE ANCHOR NOTES ON SHEET 13

FRANK L. BENNARDO, P.E. #PE56062
STATE OF TEXAS
05/30/2013
CERT OF REG. #8-11388
FRANK L. BENNARDO, P.E.
160 SW 12th AVENUE, #106
DEERFIELD BEACH, FL 33441
Ph: (954) 354-0660 Fax: (954) 354-0473
POWERED BY THE INNOVATORS OF PROESS
ENGINEER EXPRESS®
EXPERIENCE MORE AT WWW.ENGEXP.COM

Town & Country INDUSTRIES
Wholesale Aluminum and Building Products
A Division of A&C Supply Co., Inc.
400 WEST MCNAB ROAD
FT. LAUDERDALE, FL 33309

REMARKS	DRWN	CHKD	DATE
INIT ISSUE	KL	FLB	05/30/13

THIS DOCUMENT IS THE PROPERTY OF FRANK L. BENNARDO, P.E. AND SHALL NOT BE REPRODUCED IN WHOLE OR PART WITHOUT WRITTEN CONSENT OF FRANK L. BENNARDO, P.E. ALTERATIONS, ADDITIONS, LEGAL CAPTIONS, OR OTHER MARKINGS TO THIS DOCUMENT ARE NOT PERMITTED AND MAY NOT BE REPRODUCED.

COPYRIGHT FRANK L. BENNARDO P.E.

13-TCM-02b

SCALE: - 01

PAGE DESCRIPTION:
-
-

06/05/2013 - 12:23pm keithl C:\Documents and Settings\keithl\My Documents\Dropbox\Work Stuff\Town And Country Maestro TDI\13-TCM-02 Maestroshield Roll-Up (TDI)\13-TCM-02b_01a Mullion, Storm Bar, Header.dwg

HEADER CONNECTION DETAILS

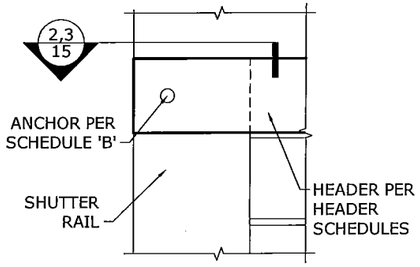

1/15 BUILD-OUT & WALL MOUNT
N.T.S. ELEV

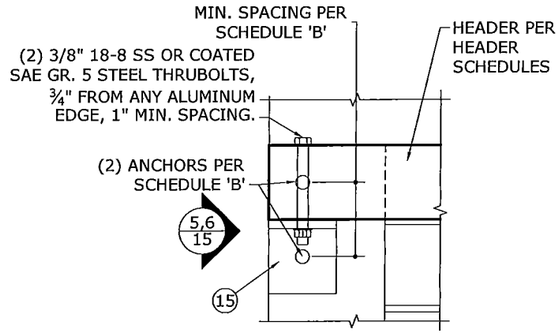

4/15 BUILD-OUT & WALL MOUNT
N.T.S. ELEV

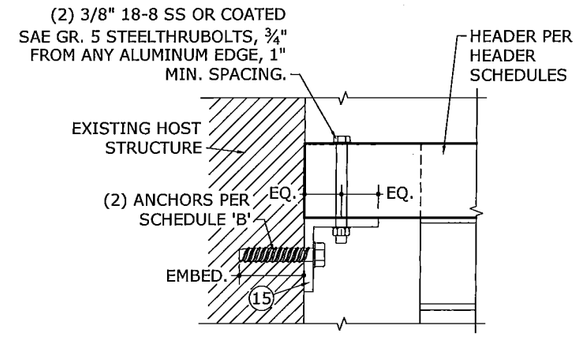

7/15 INTERIOR MOUNT
N.T.S. ELEV

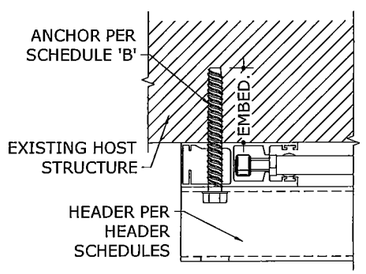

2/15 WALL MOUNT
N.T.S. HORIZ SECTION

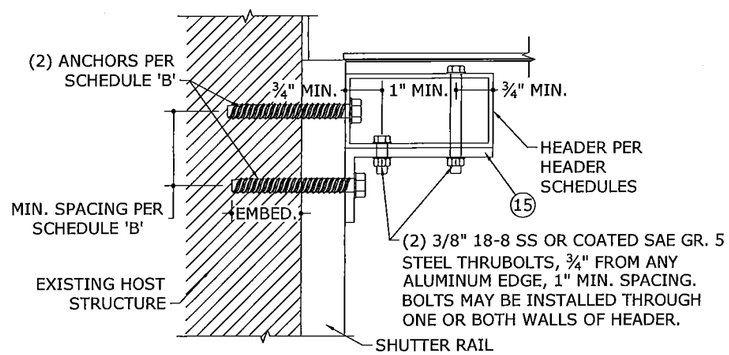

5/15 WALL MOUNT
N.T.S. VERT SECTION

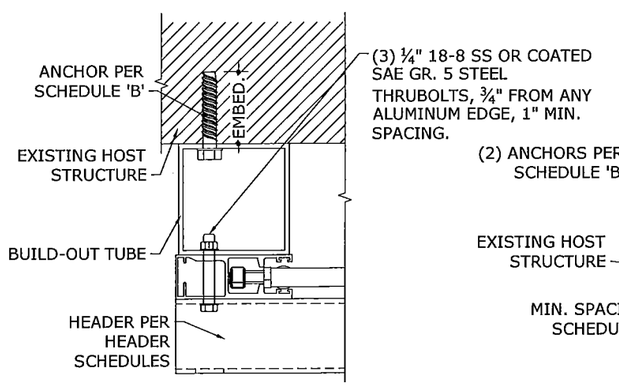

3/15 BUILD-OUT MOUNT
N.T.S. HORIZ SECTION

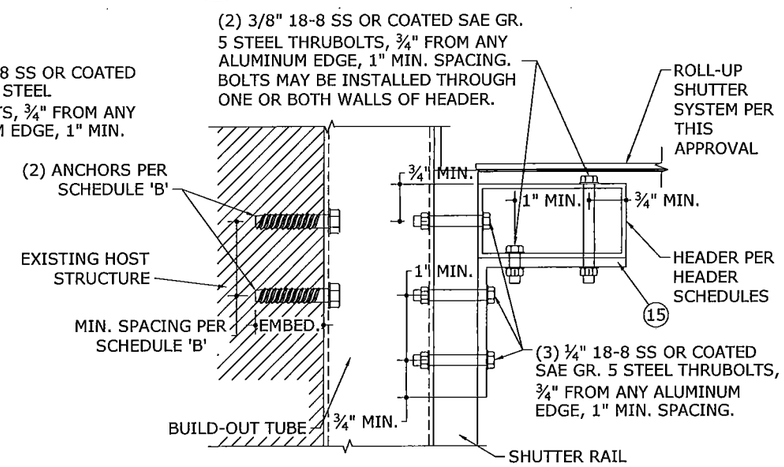

6/15 BUILD-OUT MOUNT
N.T.S. VERT SECTION

SCHEDULE 'B'

ANCHOR TYPE	MINIMUM SPACING	MINIMUM EDGE DISTANCE	MOUNTING CONDITION	NUMBER OF ANCHORS	CONNECTION CAPACITY
3/8" POWERS WEDGE BOLTS W/ 3-1/2" EMBED TO 3KSI MIN. CONCRETE	4.5"	4.5"	BUILD-OUT OR WALL MOUNT	1	2205 LB
				2	3093 LB
			INTERIOR MOUNT	1	1533 LB
				2	3065 LB
	2.5"	4.5"	BUILD-OUT OR WALL MOUNT	1	1477 LB
				2	2955 LB
			INTERIOR MOUNT	1	1272 LB
				2	2544 LB
3/8" POWERS WEDGE BOLTS W/ 3-1/2" EMBED TO GROUT-FILLED CONCRETE BLOCK*	6.0"	12.0"	BUILD-OUT OR WALL MOUNT	1	1290 LB
				2	2580 LB
			INTERIOR MOUNT	1	1100 LB
				2	2200 LB
3/8" POWERS STEEL DROPIN W/ 1-9/16" EMBED TO 3KSI MIN. CONCRETE	4.5"	5.25"	BUILD-OUT OR WALL MOUNT	1	795 LB
				2	1590 LB
			INTERIOR MOUNT	1	1145 LB
				2	2290 LB
	2.5"	5.25"	BUILD-OUT OR WALL MOUNT	1	461 LB
				2	922 LB
			INTERIOR MOUNT	1	664 LB
				2	1328 LB
5/16" ITW TAPCON XL OR ELCO ULTRACON W/ 2-1/4" MIN. EMBED TO 3.5KSI MIN. CONCRETE	5.0"	4.0"	BUILD-OUT OR WALL MOUNT	1	788 LB
				2	1576 LB
			INTERIOR MOUNT	1	851 LB
				2	1702 LB
5/16" ITW TAPCON XL OR ELCO ULTRACON W/ 2-1/4" MIN. EMBED TO GROUT-FILLED CONCRETE BLOCK	5.0"	3.125"	BUILD-OUT OR WALL MOUNT	1	292 LB
				2	584 LB
			INTERIOR MOUNT	1	372 LB
				2	744 LB
5/16" LAG SCREW W/ 2" MIN. THREAD PENETRATION TO G=0.42 MIN WOOD	2.0"	1.25"	BUILD-OUT OR WALL MOUNT	1	655 LB
				2	1311 LB
			INTERIOR MOUNT	1	151 LB
				2	301 LB

NOTES:

1. ALL ANCHORS SHALL BE ¾" MINIMUM FROM ANY ALUMINUM EDGE.
2. * ANCHOR SHALL PENETRATE THROUGH FACE SHELL INTO GROUTED CELL.
3. SEE ANCHOR NOTES ON SHEET 13.

FRANK L. BENNARDO P.E.
160 SW 12th AVENUE #106
DEERFIELD BEACH, FL 33442
Ph: (954) 354-0660 Fax: (954) 354-0443
POWERED BY THE INNOVATORS OF ENGINEERING EXPRESS
ENGINEERING EXPRESS
EXPERIENCE MORE AT WWW.ENGEXP.COM

STATE OF FLORIDA
FRANK L. BENNARDO
No. 36064
STATE OF FLORIDA
LICENSED PROFESSIONAL ENGINEER
06/05/2013
CERT OF REG. #PE 36064

Town & Country INDUSTRIES
Wholesale Aluminum and Building Products
A Division of ABC Supply Co., Inc.
400 WEST MCNAB ROAD
FT. LAUDERDALE, FL 33309

REMARKS	DRWN	CHKD	DATE
INIT ISSUE	KL	FLB	05/30/13

THIS DOCUMENT IS THE PROPERTY OF FRANK L. BENNARDO, P.E. AND SHALL NOT BE REPRODUCED IN WHOLE OR PART WITHOUT WRITTEN CONSENT OF FRANK L. BENNARDO, P.E. ALTERATIONS TO THIS DOCUMENT MAY BE MADE ONLY WITH WRITTEN CONSENT OF THE ENGINEER. OR OTHER MARKINGS TO THIS DOCUMENT, ARE NOT PERMITTED AND WILL LIMIT THE ENGINEER'S LIABILITY.
COPYRIGHT FRANK L. BENNARDO P.E.

13-TCM-02b
SCALE: - 01
PAGE DESCRIPTION:
-
-

C:\Documents and Settings\keithl\My Documents\Dropbox\Work Stuff\Town And Country Maestro TDI\13-TCM-02 Maestroshield Roll-Up (TDI)\13-TCM-02b_01a Mullion, Storm Bar, Header.dwg
06/05/2013 - 12:23pm keithl