BARRACUDA ROLL-UP SHUTTER

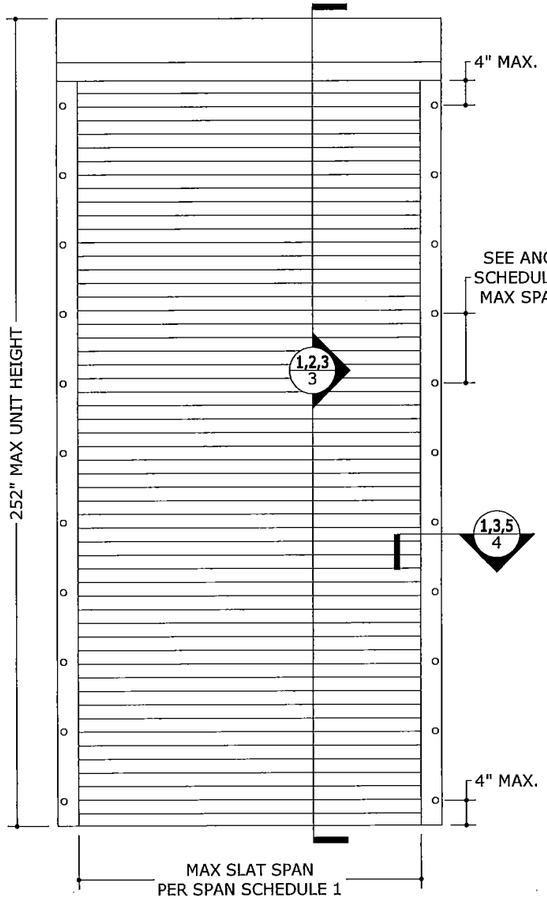

SPAN SCHEDULE 1

NON-END RETENTION SHUTTER

SLAT SPAN	ALLOWABLE DESIGN PRESSURE
36.0"	± 80.0 PSF
42.0"	± 61.2 PSF
48.0"	± 48.8 PSF
54.0"	± 40.0 PSF
60.0"	± 28.8 PSF
62.0"	±25.8 PSF

SPAN SCHEDULE 2

END RETENTION SHUTTER WITH DOUBLE WALL SLATS

SLAT SPAN	ALLOWABLE DESIGN PRESSURE
48.0"	± 113.3 PSF
54.0"	± 95.4 PSF
60.0"	± 84.4 PSF
66.0"	± 77.3 PSF
72.0"	± 72.4 PSF
78.0"	± 68.8 PSF
84.0"	± 66.0 PSF
90.0"	± 63.8 PSF
96.0"	± 61.9 PSF
102.0"	± 60.4 PSF
108.0"	± 59.0 PSF
114.0"	± 57.8 PSF
120.0"	± 56.3 PSF
126.0"	± 55.0 PSF
132.0"	± 53.8 PSF
138.0"	± 52.7 PSF
144.0"	± 51.6 PSF
150.0"	± 50.7 PSF
156.0"	± 49.8 PSF
162.0"	± 49.0 PSF
168.0"	± 48.2 PSF
174.0"	± 47.4 PSF
180.0"	± 46.7 PSF

GLASS SEPARATION SCHEDULE

END RETENTION SHUTTER WITH DOUBLE WALL SLATS (WIND ZONE 4 AND ESSENTIAL FACILITIES ONLY)

SLAT SPAN	INSTALLATIONS ≤ 30' ABOVE GRADE	INSTALLATIONS > 30' ABOVE GRADE
48.0"	9.0"	7.2"
54.0"	10.2"	7.5"
60.0"	10.2"	7.9"
66.0"	10.2"	8.3"
72.0"	10.2"	8.7"
78.0"	10.2"	9.1"
84.0"	10.2"	9.6"
90.0"	10.2"	10.0"
96.0"	10.4"	10.4"
102.0"	10.9"	10.9"
108.0"	11.3"	11.3"
114.0"	11.8"	11.8"
120.0"	12.1"	12.1"
126.0"	12.4"	12.4"
132.0"	12.7"	12.7"
138.0"	13.1"	13.1"
144.0"	13.4"	13.4"
150.0"	13.7"	13.7"
156.0"	14.1"	14.1"
162.0"	14.4"	14.4"
168.0"	14.8"	14.8"
174.0"	15.1"	15.1"
180.0"	15.5"	15.5"

SPAN AND GLAZING SEPARATION NOTES:

- SLAT SPAN IS DEFINED AS THE DISTANCE BETWEEN RAILS.
- SEPARATION FROM GLAZING IS APPLICABLE ONLY TO END RETENTION SHUTTERS WITH DOUBLE WALL SLATS, AND REQUIRED **ONLY** IN ASTM WIND ZONE 4 OR ESSENTIAL FACILITIES AS DEFINED IN ASTM E1996.
- NON-END RETENTION SHUTTER MAY NOT BE INSTALLED IN WIND ZONES 3 OR 4 OR ESSENTIAL FACILITIES, AS DEFINED IN ASTM E1996.
- LINEAR INTERPOLATION BETWEEN SHUTTER SPANS IS NOT PERMITTED. FOR SPANS BETWEEN THOSE INDICATED ABOVE, THE SEPARATION FROM GLASS AND/OR DESIGN PRESSURE FOR THE NEXT HIGHER SPAN SHALL BE USED.

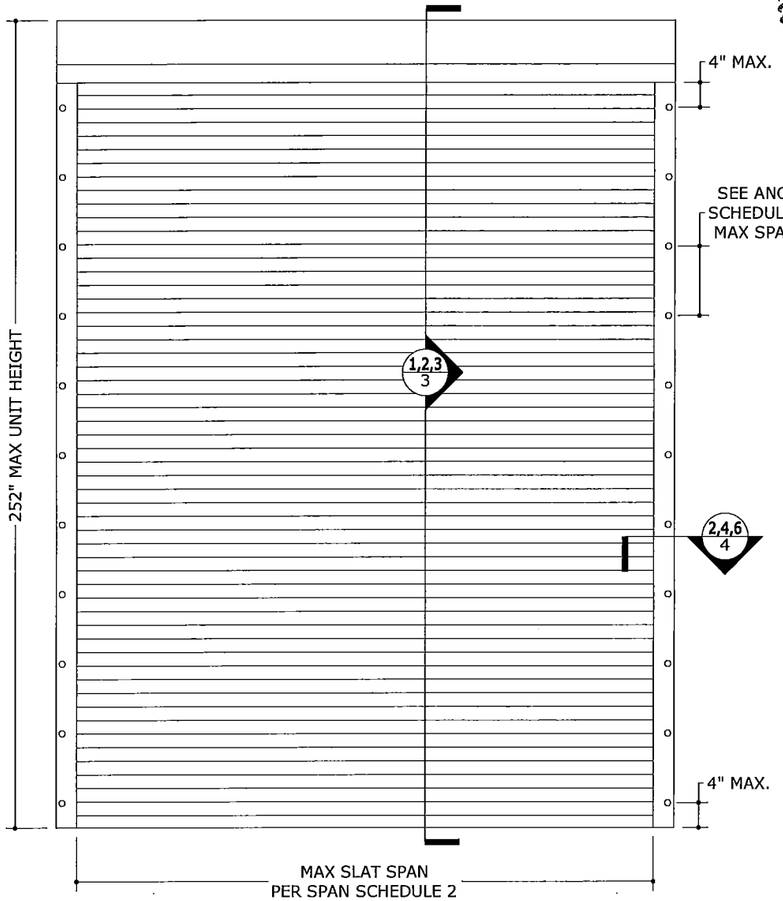

1/2 NON-END RETENTION SHUTTER
N.T.S. EXTERIOR ELEV

2/1 END RETENTION SHUTTER WITH DOUBLE WALL SLATS
N.T.S. EXTERIOR ELEV

GENERAL NOTES

1. THIS SYSTEM HAS BEEN TESTED AND EVALUATED AS A LARGE MISSILE IMPACT PROTECTIVE SYSTEM IN ACCORDANCE WITH THE 2006 & 2009 INTERNATIONAL BUILDING/RESIDENTIAL CODE PER ASTM STANDARDS E330, E1886, & E1996.
2. THIS SHUTTER SYSTEM MAY BE USED IN THE SEAWARD AND INLAND AREAS AS DEFINED BY THE TEXAS DEPARTMENT OF INSURANCE.
3. NO 33-1/3% INCREASE IN ALLOWABLE STRESS HAS BEEN USED IN THE DESIGN OF THIS SYSTEM. WIND LOAD DURATION FACTOR Cd=1.6 HAS BEEN USED FOR WOOD ANCHOR DESIGN.
4. POSITIVE AND NEGATIVE DESIGN PRESSURES CALCULATED FOR USE WITH THIS SYSTEM SHALL BE DETERMINED BY OTHERS ON A JOB-SPECIFIC BASIS IN ACCORDANCE WITH THE GOVERNING CODE. SITE-SPECIFIC PRESSURE REQUIREMENTS AS DETERMINED IN ACCORDANCE WITH ASCE 7-05 AND SHALL BE LESS THAN OR EQUAL TO THE POSITIVE OR NEGATIVE DESIGN PRESSURE CAPACITY VALUES LISTED HEREIN FOR ANY ASSEMBLY AS SHOWN. FOR WIND LOAD CALCULATIONS IN ACCORDANCE WITH ASCE 7-05, A DIRECTIONALITY FACTOR OF Kd =0.85 SHALL BE USED.
5. DESIGN PRESSURES NOTED HEREIN ARE BASED ON TESTED DESIGN PRESSURES DIVIDED BY A 1.5 SAFETY FACTOR.
6. THE SYSTEM DETAILED HEREIN IS GENERIC AND DOES NOT PROVIDE INFORMATION FOR A SPECIFIC SITE. FOR SITE CONDITIONS DIFFERENT FROM THE CONDITIONS DETAILED HEREIN, A LICENSED ENGINEER OR REGISTERED ARCHITECT SHALL PREPARE SITE SPECIFIC DOCUMENTS FOR USE IN CONJUNCTION WITH THIS DOCUMENT.
7. ROLL-UP MECHANISM AND HOOD ASSEMBLY ARE NOT PART OF THIS APPROVAL.
8. THIS DOCUMENT CONTAINS INFORMATION RELEVANT TO THE NECESSARY STRUCTURAL REQUIREMENTS OF THE SYSTEM INSTALLATION. COMPONENTS AND FASTENERS NOT REFERENCED WHICH ARE PART OF THE INTERNAL FABRICATION OF THE SPECIFIED SYSTEMS OR ASSEMBLIES SHALL BE PER MANUFACTURER PUBLISHED SPECIFICATIONS.
9. PERMIT HOLDER SHALL VERIFY THE ADEQUACY OF THE EXISTING STRUCTURE TO WITHSTAND SUPERIMPOSED LOADS. WOOD BUCKS (BY OTHERS) SHALL BE ANCHORED PROPERLY TO TRANSFER LOADS TO THE EXISTING STRUCTURE.
10. ALL EXTRUSIONS SHALL BE MINIMUM 6063-T5 ALUMINUM ALLOY, UNLESS NOTED OTHERWISE.
11. END RETENTION SHUTTER ASSEMBLY WITH DOUBLE WALL SLATS SHALL BEAR A PERMANENT LABEL ON THE BOTTOM OF THE HOOD OR ON THE BOTTOM SLAT FACING THE EXTERIOR WITH THE FOLLOWING MINIMUM INFORMATION:
    ALUTECH UNITED, INC.
    SELBYVILLE, DE
    MISSILE LEVEL D, WIND ZONE 4 - ASTM E1886, E1996 & E330
    TDI APPROVED
12. NON-END RETENTION SHUTTER ASSEMBLY AND END RETENTION SHUTTER ASSEMBLY WITH SINGLE WALL SLATS SHALL BEAR A PERMANENT LABEL ON THE BOTTOM OF THE HOOD OR ON THE BOTTOM SLAT FACING THE EXTERIOR WITH THE FOLLOWING MINIMUM INFORMATION:
    ALUTECH UNITED, INC.
    SELBYVILLE, DE
    MISSILE LEVEL C, WIND ZONE 2 - ASTM E1886, E1996 & E330
    TDI APPROVED
13. ALL BOLTS & WASHERS SHALL BE ZINC COATED STEEL, GALVANIZED STEEL, OR STAINLESS STEEL WITH A MINIMUM TENSILE YIELD STRENGTH OF 60 KSI. ALL ALUMINUM 3/16"Ø OR 1/4"Ø POP RIVETS SHALL BE 7075-T6 OR STRONGER.
14. ALL DISSIMILAR MATERIALS SHALL BE INSULATED FROM ELECTROLYSIS AS PRESCRIBED IN THE ABOVE-NOTED BUILDING CODE.

FRANK L. BENNARDO, P.E.
FL LIC. #56064
STATE OF TEXAS
FRANK L. BENNARDO
56064
LICENSED PROFESSIONAL ENGINEER
01/04/2013

FRANK L. BENNARDO, P.E.
160 SW 12th AVENUE, SUITE 202
DEERFIELD BEACH, FL 33442
PH: (954) 354-0660 FAX: (954) 354-0443
POWERED BY THE INNOVATIONS OF
ENGINEERING EXPRESS®
EXPERIENCE MORE AT WWW.ENGEXP.COM

ALUTECH UNITED, INC.
117 DIXON STREET
SELBYVILLE, DE 19975
PHONE: 302 - 436 - 6005 FAX: 302 - 436 - 5100

BARRACUDA ROLL-UP SHUTTER
TEXAS DEPARTMENT OF INSURANCE
PRODUCT APPROVAL

REMARKS	DRWN	CHKD	DATE
INIT ISSUE	CSL	TSB	01/02/13

THIS DOCUMENT IS THE PROPERTY OF FRANK L. BENNARDO P.E. AND SHALL NOT BE REPRODUCED IN WHOLE OR IN PART WITHOUT THE WRITTEN CONSENT OF FRANK L. BENNARDO, P.E. ALTERATIONS, ADDITIONS, MISINTERPRETATIONS, OR OTHER WORKS TO THIS DOCUMENT ARE NOT PERMITTED AND INVALIDATE OUR CERTIFICATION.
COPYRIGHT FRANK L. BENNARDO P.E.

12-AUI-03
SCALE: - 01
PAGE DESCRIPTION:
-
-
1 OF 12

01/04/2013 - 10:46am chen \\SERVER01\FileCabinet\01 Project Files\Alutech United, Inc (AUI)\2012\12-AUI-03 Barracuda Rollup\01 TDI SHU-151 Initial Submittal\12-AUI-03_01b Barracuda Roll-up Shutter (TDI).dwg

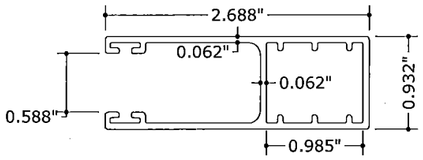

1 NON-END-RETENTION RAIL

8" = 1'-0" 6063-T5 ALUM.

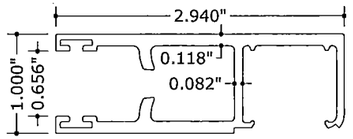

2 END-RETENTION RAIL

8" = 1'-0" 6063-T5 ALUM.

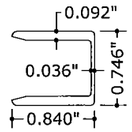

5 END-RETENTION RAIL INSERT

8" = 1'-0" PLASTIC

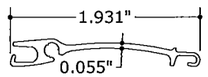

7 SINGLE WALL SLAT

8" = 1'-0" 6063-T5 ALUM.

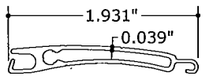

8 DOUBLE WALL SLAT

8" = 1'-0" 6063-T5 ALUM.

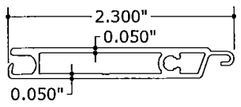

9 BASE SLAT

8" = 1'-0" 6063-T5 ALUM.

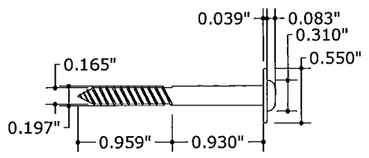

10 RETAINING SCREW

8" = 1'-0" 304 S.S.

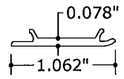

6 END-RETENTION RAIL SNAP COVER

8" = 1'-0" 6063-T5 ALUM.

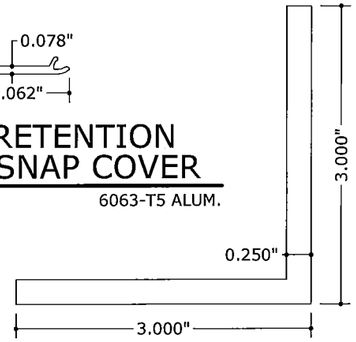

3 3"x3"x0.250" ANGLE

8" = 1'-0" 6063-T5 ALUM.

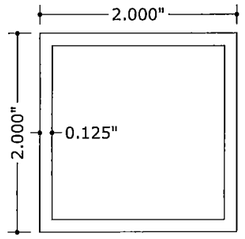

4 2"x2"x0.125" TUBE

8" = 1'-0" 6063-T5 ALUM.

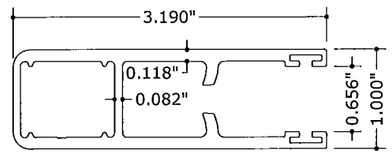

11 "BIII.1" END-RETENTION RAIL

8" = 1'-0" 6063-T5 ALUM.

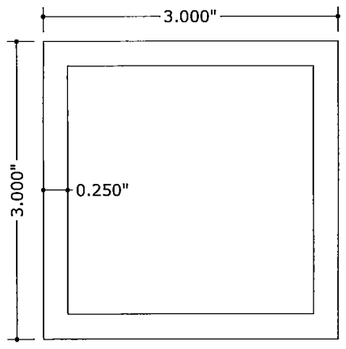

12 3"x3"x0.250" TUBE

8" = 1'-0" 6063-T5 ALUM.

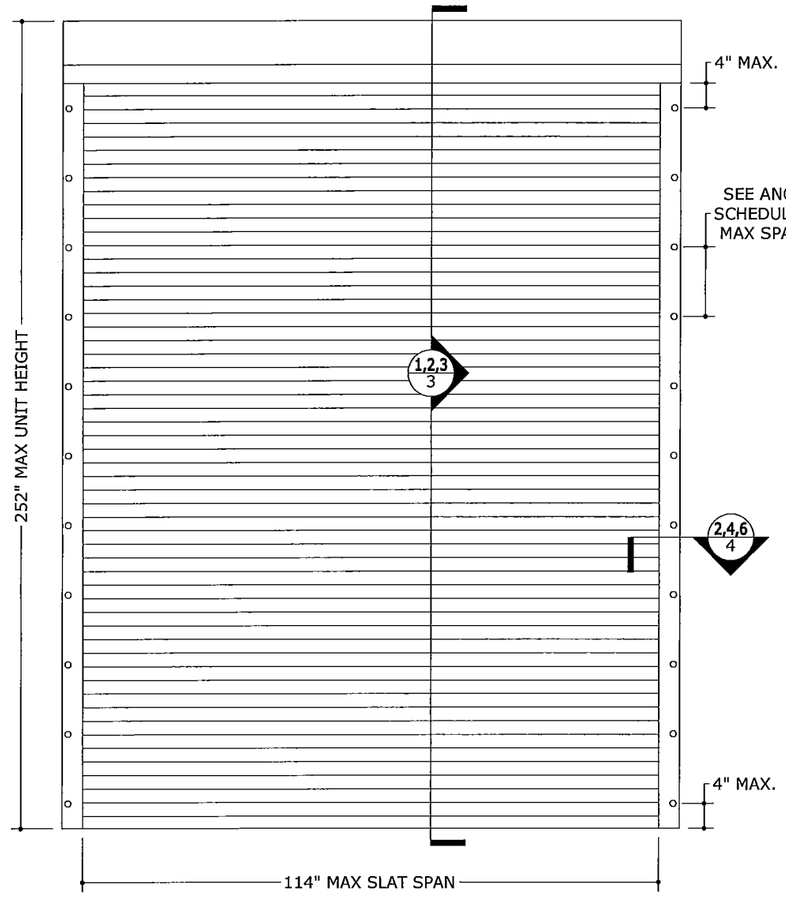

1/2 END RETENTION SHUTTER WITH SINGLE WALL SLATS

N.T.S. EXTERIOR ELEV

ALLOWABLE DESIGN PRESSURES

END RETENTION SHUTTER WITH SINGLE WALL SLATS*

+50 PSF / -50 PSF

***END RETENTION SHUTTER WITH SINGLE WALL SLAT NOTES:**

- END RETENTION SHUTTER WITH SINGLE WALL SLATS MAY NOT BE INSTALLED IN WIND ZONES 3 OR 4 OR ESSENTIAL FACILITIES, AS DEFINED IN ASTM E1996.
- SYSTEM HAS BEEN DESIGNED AS A NON-POROUS ASSEMBLY AND NO SEPARATION FROM GLAZING IS REQUIRED.

FRANK L. BENNARDO, P.E.
LIC. #PE0086064
STATE OF FLORIDA
FRANK L. BENNARDO
LICENSE #0086064
PROFESSIONAL ENGINEER
01/04/2013
FRANK L. BENNARDO, P.E.
160 SW 12th AVENUE, #204
DEERFIELD BEACH, FL 33442
PH: (954) 354-0660 FAX: (954) 354-0445
POWERED BY THE INNOVATIONS OF ENGINEERING EXPRESS
EXPERIENCE MORE AT WWW.ENGEXP.COM

ALUTECH UNITED, INC.
117 DIXON STREET
SELBYVILLE, DE 19975
PHONE: 302 - 436 - 6005 FAX: 302 - 436 - 5100

BARRACUDA ROLL-UP SHUTTER
TEXAS DEPARTMENT OF INSURANCE
PRODUCT APPROVAL

REMARKS	DRWN	CHKD	DATE
INIT ISSUE	CSL	TSB	01/02/13

THIS DOCUMENT IS THE PROPERTY OF FRANK L. BENNARDO, P.E. AND SHALL NOT BE REPRODUCED, IN WHOLE OR IN PART, WITHOUT THE WRITTEN CONSENT OF FRANK L. BENNARDO, P.E. ● ANY REUSE OF THIS DOCUMENT WITHOUT WRITTEN VERIFICATION OR ADAPTATION BY FRANK L. BENNARDO, P.E. FOR THE SPECIFIC PURPOSE INTENDED WILL BE AT USER'S SOLE RISK AND WITHOUT LIABILITY OR LEGAL EXPOSURE TO FRANK L. BENNARDO, P.E. ● UNAUTHORIZED REUSE OF THIS DOCUMENT IS PROHIBITED AND WILL VOID ANY AND ALL WARRANTIES EXPRESSED OR IMPLIED. ● ALTERATION OF THIS DOCUMENT IS PROHIBITED AND INVALIDATES OUR CERTIFICATION.

COPYRIGHT FRANK L. BENNARDO P.E.

12-AUI-03

SCALE: - 01

PAGE DESCRIPTION:
-
-

2 OF 12

01/04/2013 - 10:46am chen \\SERVER01\FileCabinet\01 Project Files\Alutech United, Inc (AUI)\2012\12-AUI-03 Barracuda Rollup\01 TDI SHU-151 Initial Submittal\12-AUI-03_01b Barracuda Roll-up Shutter (TDI).dwg

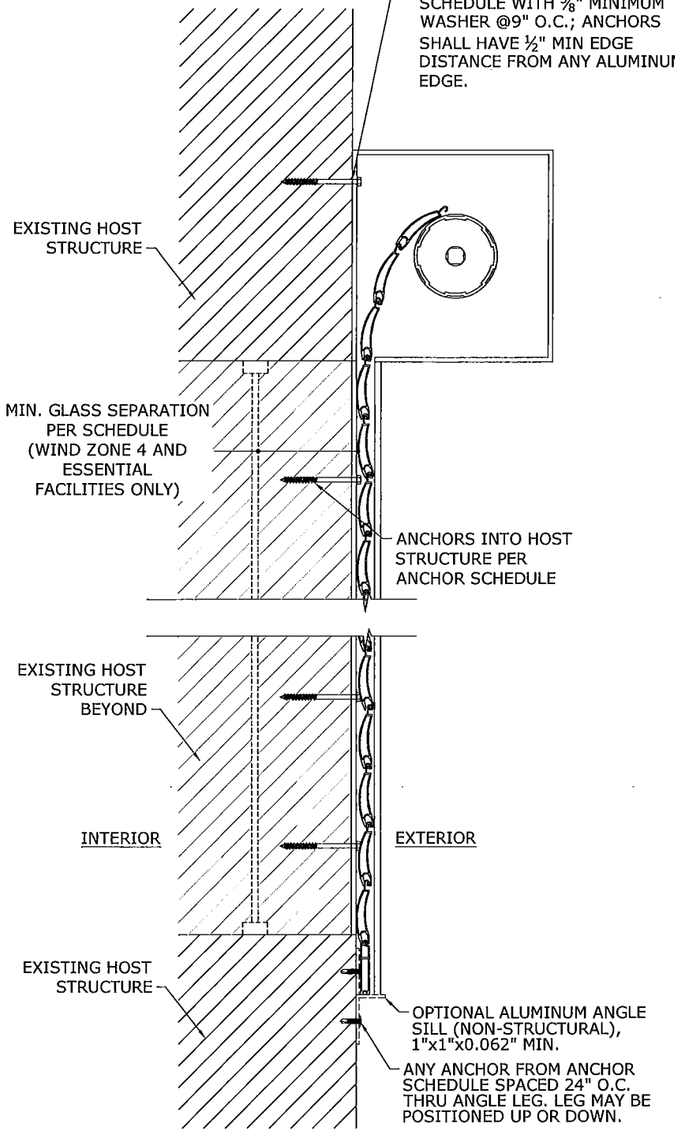

1/3 TYPICAL WALL MOUNT
N.T.S. VERT SECTION

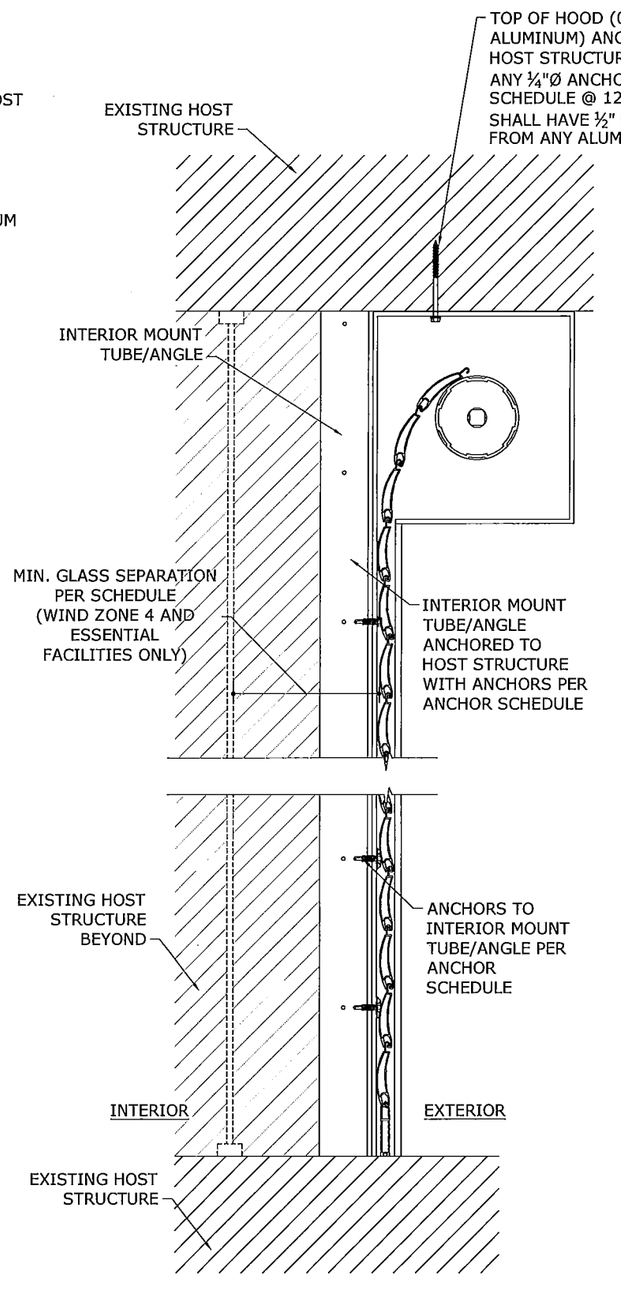

2/3 TYPICAL INTERIOR MOUNT
N.T.S. VERT SECTION

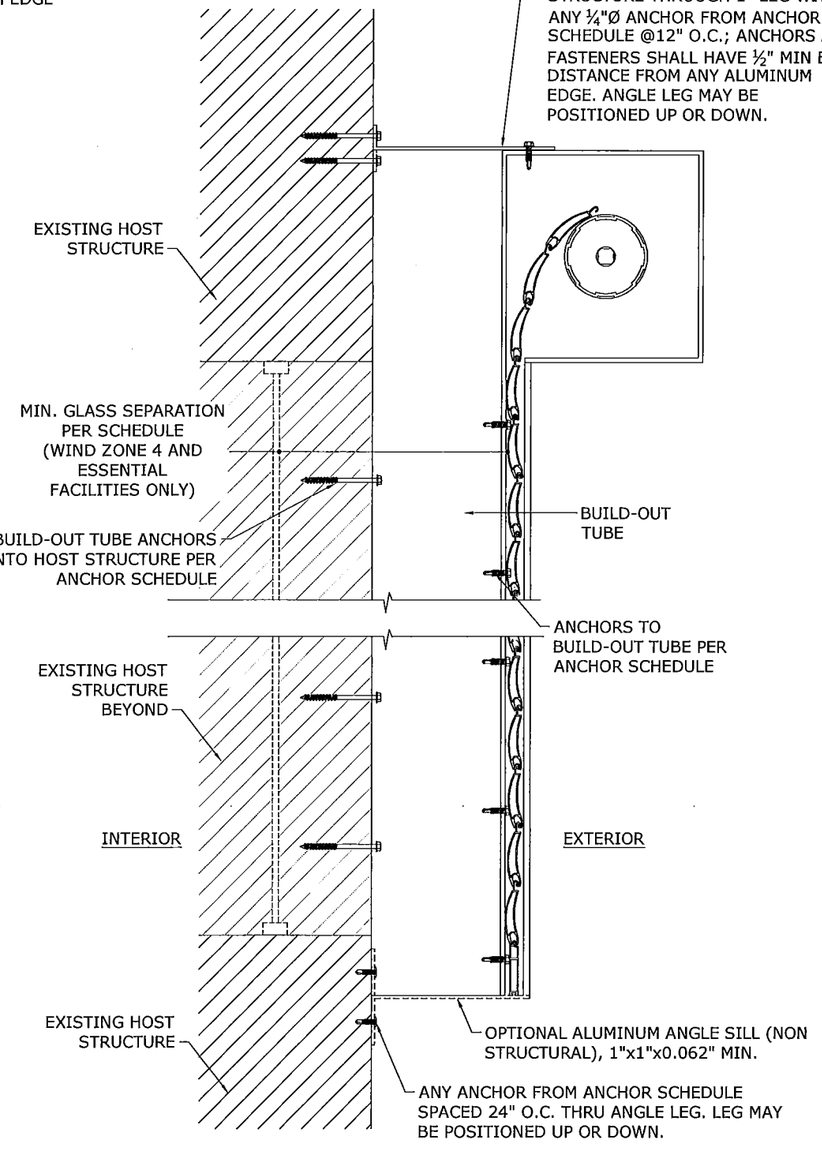

3/3 BUILD-OUT WALL MOUNT
N.T.S. VERT SECTION

NOTE: SHUTTERS WITH DOUBLE WALL SLATS SHOWN HERE. INSTALLATION WITH SINGLE WALL SLATS SIMILAR.

STATE OF TEXAS
FRANK L. BENNARDO P.E.
#PE096064
01/04/2013
PROFESSIONAL ENGINEER

FRANK L. BENNARDO, P.E.
160 SW 12th AVENUE #205
DEERFIELD BEACH, FL 33442
Ph: (954) 354-0660 Fax: (954) 354-0443

POWERED BY THE INNOVATION OF ENGINEERING
ENGINEERING EXPRESS®
EXPERIENCE MORE AT WWW.ENGEXP.COM

ALUTECH UNITED, INC.
117 DIXON STREET
SELBYVILLE, DE 19975
PHONE: 302 - 436 - 6005 FAX: 302 - 436 - 5100

BARRACUDA ROLL-UP SHUTTER
TEXAS DEPARTMENT OF INSURANCE
PRODUCT APPROVAL

REMARKS	DRWN	CHKD	DATE
INIT ISSUE	CSL	TSB	01/02/13

THIS DOCUMENT IS THE PROPERTY OF FRANK L. BENNARDO, P.E.AND SHALL NOT BE REPRODUCED IN WHOLE OR PART WITHOUT WRITTEN CONSENT OF FRANK L. BENNARDO, P.E. ANY REPRODUCTION WILL AUTOMATICALLY CONVEY RIGHTS TO THIS DOCUMENT ARE NOT PERMITTED AND INVALIDATE OUR CERTIFICATION.
COPYRIGHT FRANK L. BENNARDO P.E.

12-AUI-03
SCALE: - 01
PAGE DESCRIPTION:
-
-

3 OF 12

01/04/2013 - 10:46am chen \\SERVER01\FileCabinet\01 Project Files\Alutech United, Inc (AUI)\2012\12-AUI-03 Barracuda Rollup\01 TDI SHU-151 Initial Submittal\12-AUI-03_01b Barracuda Roll-up Shutter (TDI).dwg

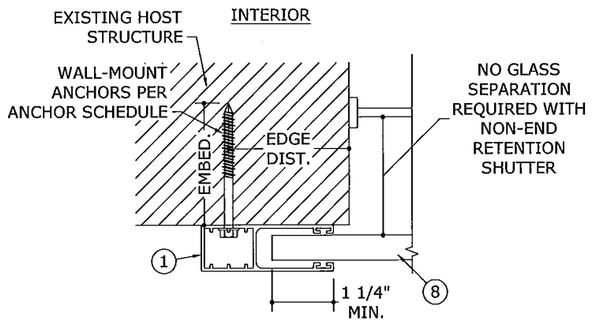

1/4 NON-END RETENTION TYPICAL WALL MOUNT

N.T.S. HORIZ SECTION

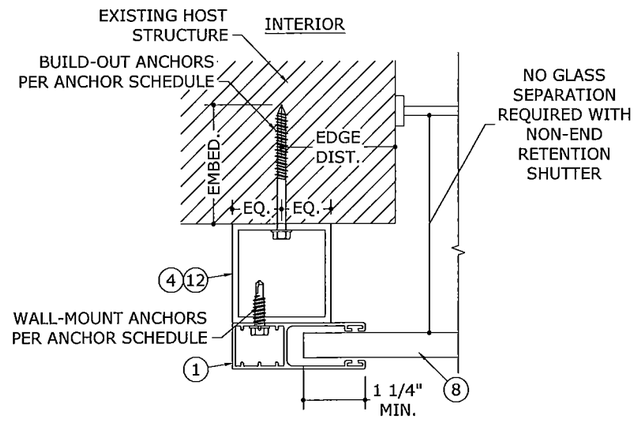

3/4 NON-END RETENTION TYP. BUILD-OUT MOUNT

N.T.S. HORIZ SECTION

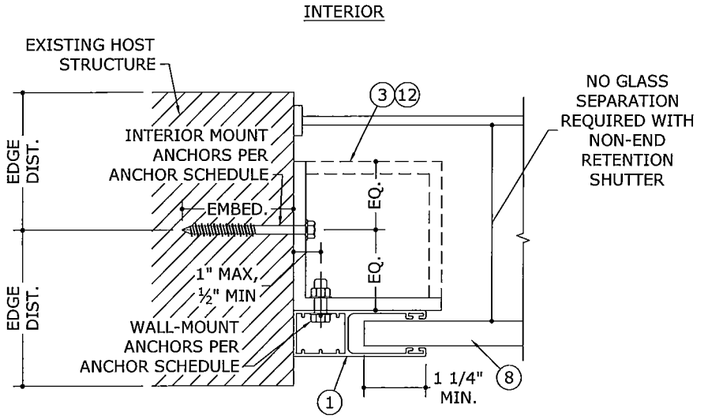

5/4 NON-END RETENTION TYP. INTERIOR MOUNT

N.T.S. HORIZ SECTION

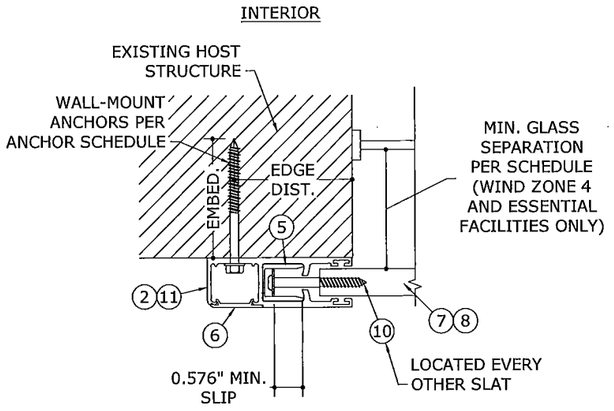

2/4 END RETENTION TYPICAL WALL MOUNT

N.T.S. HORIZ SECTION

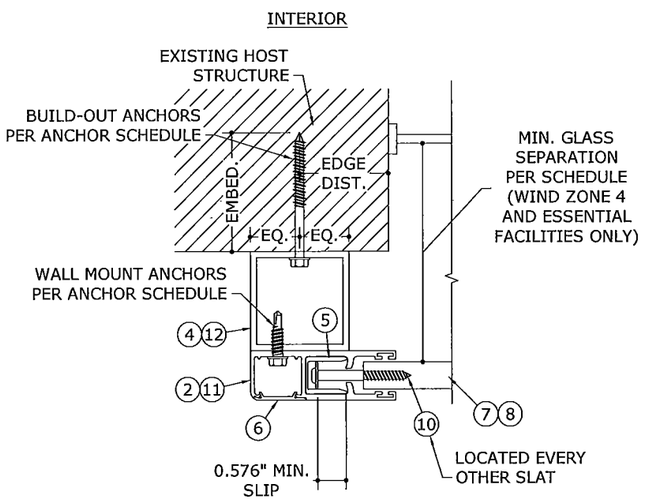

4/4 END RETENTION TYP. BUILD-OUT MOUNT

N.T.S. HORIZ SECTION

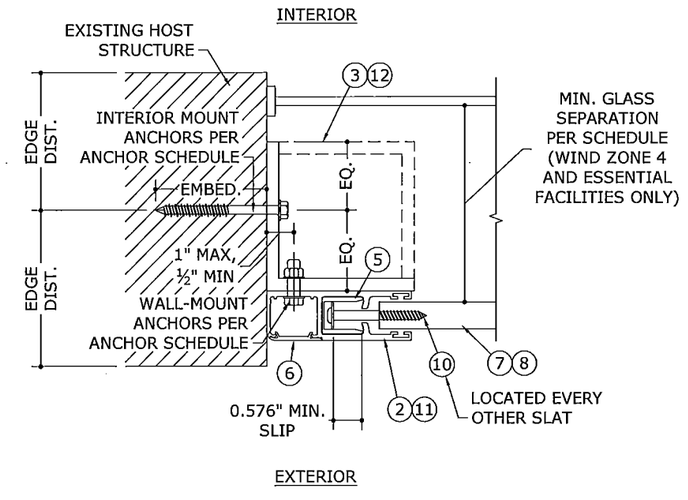

6/4 END RETENTION TYP. INTERIOR MOUNT

N.T.S. HORIZ SECTION

STATE OF TEXAS
FRANK L. BENNARDO P.E.
DED96064
01/04/2013
PROFESSIONAL ENGINEER
LICENSED
96064

FRANK L. BENNARDO P.E.
160 SW 12th AVENUE, SUITE 442
DEERFIELD BEACH, FL 33442
PH: (954) 354-0660 FAX: (954) 354-0443
POWERED BY THE INNOVATIONS OF ENGINEERING EXPRESS®
EXPERIENCE MORE AT WWW.ENGEXP.COM

ALUTECH UNITED, INC.
117 DIXON STREET
SELBYVILLE, DE 19975
PHONE: 302 - 436 - 6005 FAX: 302 - 436 - 5100

BARRACUDA ROLL-UP SHUTTER
TEXAS DEPARTMENT OF INSURANCE
PRODUCT APPROVAL

REMARKS	DRWN	CHKD	DATE
INIT ISSUE	CSL	TSB	01/02/13

THIS DOCUMENT IS THE PROPERTY OF FRANK L. BENNARDO, P.E. AND SHALL NOT BE REPRODUCED IN WHOLE OR IN PART WITHOUT WRITTEN CONSENT OF FRANK L. BENNARDO, P.E. ANY UNAUTHORIZED USE OF THIS DOCUMENT SHALL BE AT THE USER'S SOLE RISK AND WITHOUT LIABILITY TO FRANK L. BENNARDO, P.E. ALTERATIONS TO THIS DOCUMENT ARE NOT PERMITTED AND INVALIDATE OUR CERTIFICATION.

COPYRIGHT FRANK L. BENNARDO P.E.

12-AUI-03

SCALE: - 01

PAGE DESCRIPTION:
-
-

OF 12

4

01/04/2013 - 10:46am chen \\SERVER01\FileCabinet\01 Project Files\Alutech United, Inc (AUI)\2012\12-AUI-03 Barracuda Rollup\01 TDI SHU-151 Initial Submittal\12-AUI-03_01b Barracuda Roll-up Shutter (TDI).dwg

ANCHOR SCHEDULE:
NON-END RETENTION WALL MOUNT

ANCHOR	SUBSTRATE	MINIMUM EMBEDMENT	MINIMUM EDGE DISTANCE	MAXIMUM SPACING (O.C.)
1/4" ELCO ULTRACON	2846 PSI MIN. CONCRETE	1.75"	2.5"	12.0"
	GROUT-FILLED CONCRETE BLOCK	2.25"	2.5"	12.0"
	HOLLOW CONCRETE BLOCK	1.25"	2.5"	12.0"
1/4" ITW SS TAPCON	3192 PSI MIN. CONCRETE	1.75"	2.5"	12.0"
	HOLLOW CONCRETE BLOCK	1.25"	2.5"	12.0"
1/4" LAG SCREW	G=0.42 MIN. WOOD	1.5"	0.75"	12.0"
#14 WOOD SCREW	G=0.42 MIN. WOOD	1.5"	0.75"	12.0"
#14 316 SS SMS (OR 1/4-20 316 SS THRU-BOLT) W/ 5/8" WASHER	1/8" THICK MIN. 6063-T5 ALUMINUM OR A36 STEEL	FULL THREAD PENETRATION	0.5"	12.0"

ANCHOR SCHEDULE:
NON-END RETENTION BUILD-OUT MOUNT

ANCHOR	SUBSTRATE	MINIMUM EMBEDMENT	MINIMUM EDGE DISTANCE	MAXIMUM SPACING (O.C.)
1/4" ELCO ULTRACON	2846 PSI MIN. CONCRETE	1.75"	2.5"	12.0"
	GROUT-FILLED CONCRETE BLOCK	2.25"	2.5"	12.0"
	HOLLOW CONCRETE BLOCK	1.25"	2.5"	8.3"
1/4" ITW SS TAPCON	3192 PSI MIN. CONCRETE	1.75"	2.5"	12.0"
	HOLLOW CONCRETE BLOCK	1.25"	2.5"	7.6"
1/4" LAG SCREW	G=0.42 MIN. WOOD	1.5"	0.75"	12.0"
#14 WOOD SCREW	G=0.42 MIN. WOOD	1.5"	0.75"	12.0"
#14 316 SS SMS (OR 1/4-20 316 SS THRU-BOLT) W/ 5/8" WASHER	1/8" THICK MIN. 6063-T5 ALUMINUM OR A36 STEEL	FULL THREAD PENETRATION	0.5"	10.2"

ANCHOR SCHEDULE:
NON-END RETENTION INTERIOR MOUNT

ANCHOR	SUBSTRATE	MINIMUM EMBEDMENT	MINIMUM EDGE DISTANCE	MAXIMUM SPACING (O.C.)
1/4" ELCO ULTRACON	2846 PSI MIN. CONCRETE	1.75"	2.5"	12.0"
	GROUT-FILLED CONCRETE BLOCK	2.25"	2.5"	12.0"
	HOLLOW CONCRETE BLOCK	1.25"	2.5"	12.0"
1/4" ITW SS TAPCON	3192 PSI MIN. CONCRETE	1.75"	2.5"	12.0"
	HOLLOW CONCRETE BLOCK	1.25"	2.5"	10.3"
1/4" LAG SCREW	G=0.42 MIN. WOOD	1.5"	0.75"	11.5"
#14 WOOD SCREW	G=0.42 MIN. WOOD	1.5"	0.75"	10.2"
#14 316 SS SMS (OR 1/4-20 316 SS THRU-BOLT) W/ 5/8" WASHER	1/8" THICK MIN. 6063-T5 ALUMINUM OR A36 STEEL	FULL THREAD PENETRATION	0.5"	12.0"

ANCHOR NOTES:

1. ANCHORS SHALL BE INSTALLED IN ACCORDANCE WITH MANUFACTURERS' RECOMMENDATIONS.
2. WHERE ANCHORS FASTEN TO NARROW FACE OF STUD FRAMING, ANCHOR SHALL BE LOCATED IN CENTER OF NOMINAL 2x (MIN) WOOD STUD (i.e. 3/4" EDGE DISTANCE IS ACCEPTABLE FOR ANCHORS TO WOOD FRAMING).
3. MINIMUM EMBEDMENT SHALL BE AS NOTED IN ANCHOR SCHEDULE. MINIMUM EMBEDMENT AND EDGE DISTANCE EXCLUDES STUCCO, FOAM, BRICK, AND OTHER WALL FINISHES.
4. ANCHOR SCHEDULE APPLIES TO ALL PRODUCTS CERTIFIED HEREIN, BUT ONLY PROVIDES MAXIMUM ALLOWABLE ANCHOR SPACING. MAXIMUM ALLOWABLE SPANS AND PRESSURES INDICATED IN SPAN SCHEDULE SHALL APPLY.
5. WHERE EXISTING STRUCTURE IS WOOD FRAMING, EXISTING CONDITIONS MAY VARY. FIELD VERIFY THAT FASTENERS ARE INTO ADEQUATE WOOD FRAMING MEMBERS, NOT INTO PLYWOOD.
6. SHEET METAL SCREWS SHALL BE INSTALLED WITH FULL ENGAGEMENT OF THREADS INTO METAL HOST STRUCTURE.
7. ▨ DESIGNATES ANCHOR CONDITIONS WHICH ARE NOT ACCEPTABLE FOR USE.

STATE OF FLORIDA
FRANK L. BENNARDO, P.E.
PE 59064
FRANK L. BENNARDO
9606
LICENSED
PROFESSIONAL ENGINEER
01/04/2013

FRANK L. BENNARDO P.E. #59064
160 SW 12th AVENUE, SUITE 106
DEERFIELD BEACH, FL 33442
PH: (954) 354-0660 FAX: (954) 354-0443
POWERED BY THE INNOVATIONS OF ENGINEERING EXPRESS®
EXPERIENCE MORE AT WWW.ENGEXP.COM

ALUTECH UNITED, INC.
117 DIXON STREET
SELBYVILLE, DE 19975
PHONE: 302 - 436 - 6005 FAX: 302 - 436 - 5100

BARRACUDA ROLL-UP SHUTTER
TEXAS DEPARTMENT OF INSURANCE
PRODUCT APPROVAL

REMARKS	DRWN	CHKD	DATE
INIT ISSUE	CSL	TSB	01/02/13

THIS DOCUMENT IS THE PROPERTY OF FRANK L. BENNARDO, P.E AND SHALL NOT BE REPRODUCED IN ANY FORM WITHOUT THE EXPRESS WRITTEN CONSENT OF FRANK L. BENNARDO, P.E. * ALTERATIONS, ADDITIONS, HIGHLIGHTING, OR OTHER MARKINGS TO THIS DOCUMENT ARE NOT PERMITTED AND INVALIDATE OUR CERTIFICATION.

COPYRIGHT FRANK L. BENNARDO P.E.

12-AUI-03
SCALE: - 01
PAGE DESCRIPTION:
-
-

01/04/2013 - 10:46am chen \\SERVER01\FileCabinet\01 Project Files\Alutech United, Inc (AUI)\2012\12-AUI-03_01b Barracuda Rollup\01 TDI SHU-151 Initial Submittal\12-AUI-03 Barracuda Rollup\01 TDI SHU-151 Initial Submittal\12-AUI-03_01b Barracuda Roll-up Shutter (TDI).dwg

ANCHOR SCHEDULE:
WALL MOUNT: END RETENTION SHUTTER WITH DOUBLE WALL SLATS

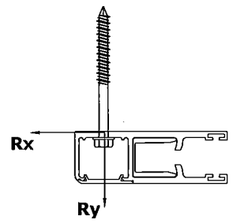

SLAT SPAN	DESIGN PRESSURE	Rx	Ry	MAXIMUM SPACING (O.C.) 1/4" ELCO ULTRACON TO 2846 PSI MIN. CONCRETE; 1.75" MIN. EMBEDMENT; 2.5" MIN. EDGE DISTANCE	1/4" SS ITW TAPCON TO 3192 PSI MIN. CONCRETE; 1.75" MIN. EMBEDMENT; 2.5" MIN. EDGE DISTANCE	5/16" ITW TAPCON TO 2899 PSI MIN. CONCRETE; 2.25" MIN. EMBEDMENT; 3.125" MIN. EDGE DISTANCE	5/16" ITW TAPCON TO GROUT-FILLED CONCRETE BLOCK; 2.25" MIN. EMBEDMENT; 4" MIN. EDGE DISTANCE	5/16" ITW TAPCON TO HOLLOW CONCRETE BLOCK; 1.75" MIN. EMBEDMENT; 4" MIN. EDGE DISTANCE	1/4" POWERS POWER-BOLT TO 3000 PSI MIN. CONCRETE; 2.5" MIN. EMBEDMENT; 3" MIN. EDGE DISTANCE	1/4" ALL-POINTS SOLID-SET TO 3000 PSI MIN. CONCRETE; 0.875" MIN. EMBEDMENT; 3" MIN. EDGE DISTANCE	1/4" ALL-POINTS SOLID-SET TO HOLLOW BLOCK; 0.875" MIN. EMBEDMENT; 3" MIN. EDGE DISTANCE	1/4" LAG SCREW TO G=0.55 MIN WOOD; 1.5" MIN. EMBEDMENT; 0.75" MIN. EDGE DISTANCE	5/16" LAG SCREW TO G=0.42 MIN WOOD; 2" MIN. EMBEDMENT; 0.75" MIN. EDGE DISTANCE	#14 WOOD SCREW TO G=0.55 MIN WOOD; 1.5" MIN. EMBEDMENT; 0.75" MIN. EDGE DISTANCE	#14 316 SS SMS W/ FULL THREAD PENETRATION (OR 1/4-20 316 SS THRU-BOLT) W/ 5/8" WASHER TO 0.125" MIN. 6063-T5 ALUM; 0.5" MIN. EDGE DISTANCE	#14 316 SS SMS W/ FULL THREAD PENETRATION (OR 1/4-20 316 SS THRU-BOLT) W/ 5/8" WASHER TO 0.25" MIN. 6063-T5 ALUM; 0.5" MIN. EDGE DISTANCE	3/8" POWERS WEDGE BOLT TO 3000 PSI MIN. CONCRETE; 3.5" MIN. EMBEDMENT; 4.5" MIN. EDGE DISTANCE
48"	+/- 40 PSF	0.0 LB/FT	80.0 LB/FT	4.0"	4.0"	4.0"	4.0"	4.0"	4.0"	4.0"	4.0"	4.0"	4.0"	4.0"	4.0"	4.0"	4.0"	4.0"
	+/- 50 PSF	0.0 LB/FT	100.0 LB/FT	4.0"	4.0"	4.0"	4.0"	4.0"	4.0"	4.0"	4.0"	4.0"	4.0"	4.0"	4.0"	4.0"	4.0"	4.0"
	+/- 60 PSF	0.0 LB/FT	120.0 LB/FT	4.0"	4.0"	4.0"	4.0"	4.0"	4.0"	4.0"	4.0"	4.0"	4.0"	4.0"	4.0"	4.0"	4.0"	4.0"
	+/- 70 PSF	40.3 LB/FT	156.4 LB/FT	4.0"	4.0"	4.0"	4.0"	4.0"	4.0"	4.0"	4.0"	4.0"	4.0"	4.0"	4.0"	4.0"	4.0"	4.0"
	+/- 80 PSF	89.5 LB/FT	198.9 LB/FT	4.0"	4.0"	4.0"	4.0"	4.0"	4.0"	4.0"	4.0"	4.0"	4.0"	4.0"	4.0"	4.0"	4.0"	4.0"
	+/- 90 PSF	137.6 LB/FT	243.7 LB/FT	4.0"	4.0"	4.0"	4.0"	4.0"	4.0"	4.0"	4.0"	4.0"	4.0"	4.0"	4.0"	4.0"	4.0"	4.0"
	+/- 100 PSF	184.6 LB/FT	290.6 LB/FT	4.0"	4.0"	4.0"	4.0"	4.0"	4.0"	4.0"	4.0"	4.0"	4.0"	4.0"	4.0"	4.0"	4.0"	4.0"
	+/- 113 PSF	245.3 LB/FT	356.2 LB/FT	4.0"	4.0"	4.0"	4.0"	4.0"	4.0"	4.0"	4.0"	4.0"	4.0"	4.0"	4.0"	4.0"	4.0"	4.0"
60"	+/- 40 PSF	81.4 LB/FT	130.0 LB/FT	4.0"	4.0"	4.0"	4.0"	4.0"	4.0"	4.0"	4.0"	4.0"	4.0"	4.0"	4.0"	4.0"	4.0"	4.0"
	+/- 50 PSF	150.7 LB/FT	183.9 LB/FT	4.0"	4.0"	4.0"	4.0"	4.0"	4.0"	4.0"	4.0"	4.0"	4.0"	4.0"	4.0"	4.0"	4.0"	4.0"
	+/- 60 PSF	219.0 LB/FT	240.4 LB/FT	4.0"	4.0"	4.0"	4.0"	4.0"	4.0"	4.0"	4.0"	4.0"	4.0"	4.0"	4.0"	4.0"	4.0"	4.0"
	+/- 70 PSF	286.0 LB/FT	299.5 LB/FT	4.0"	4.0"	4.0"	4.0"	4.0"	4.0"	4.0"	4.0"	4.0"	4.0"	4.0"	4.0"	4.0"	4.0"	4.0"
	+/- 80 PSF	351.9 LB/FT	361.0 LB/FT	4.0"	4.0"	4.0"	4.0"	4.0"	4.0"	4.0"	4.0"	4.0"	4.0"	4.0"	4.0"	4.0"	4.0"	4.0"
	+/- 84 PSF	380.5 LB/FT	388.8 LB/FT	4.0"	4.0"	4.0"	4.0"	4.0"	4.0"	4.0"	4.0"	4.0"	3.8"	4.0"	4.0"	4.0"	4.0"	4.0"
72"	+/- 40 PSF	230.3 LB/FT	204.2 LB/FT	4.0"	4.0"	4.0"	4.0"	4.0"	4.0"	4.0"	4.0"	4.0"	4.0"	4.0"	4.0"	4.0"	4.0"	4.0"
	+/- 50 PSF	320.3 LB/FT	273.9 LB/FT	4.0"	4.0"	4.0"	4.0"	4.0"	4.0"	4.0"	4.0"	4.0"	4.0"	4.0"	4.0"	4.0"	4.0"	4.0"
	+/- 60 PSF	408.9 LB/FT	346.9 LB/FT	4.0"	4.0"	4.0"	4.0"	4.0"	4.0"	4.0"	4.0"	4.0"	3.6"	4.0"	4.0"	4.0"	4.0"	4.0"
	+/- 70 PSF	496.1 LB/FT	423.1 LB/FT	4.0"	4.0"	4.0"	4.0"	3.9"	4.0"	4.0"	4.0"	3.4"	3.0"	3.4"	4.0"	4.0"	4.0"	4.0"
	+/- 72 PSF	516.8 LB/FT	441.9 LB/FT	4.0"	4.0"	4.0"	4.0"		4.0"	4.0"	4.0"	3.2"	2.9"	3.3"	4.0"	4.0"	4.0"	4.0"
84"	+/- 40 PSF	362.9 LB/FT	269.4 LB/FT	4.0"	4.0"	4.0"	4.0"	4.0"	4.0"	4.0"	4.0"	4.0"	4.0"	4.0"	4.0"	4.0"	4.0"	4.0"
	+/- 50 PSF	475.8 LB/FT	355.0 LB/FT	4.0"	4.0"	4.0"	4.0"	4.0"	4.0"	4.0"	4.0"	3.6"	3.2"	3.7"	4.0"	4.0"	4.0"	4.0"
	+/- 60 PSF	587.0 LB/FT	444.8 LB/FT	4.0"	4.0"	4.0"	4.0"		4.0"	4.0"	3.7"	2.9"	2.6"	3.0"	3.8"	4.0"	4.0"	4.0"
	+/- 66 PSF	652.7 LB/FT	500.7 LB/FT	4.0"	4.0"	4.0"	4.0"		4.0"	4.0"	3.3"	2.6"	2.3"	2.7"	3.4"	4.0"	4.0"	4.0"
96"	+/- 40 PSF	490.1 LB/FT	330.6 LB/FT	4.0"	4.0"	4.0"	4.0"	4.0"	4.0"	4.0"	4.0"	3.6"	3.1"	3.7"	4.0"	4.0"	4.0"	4.0"
	+/- 50 PSF	627.7 LB/FT	432.7 LB/FT	4.0"	4.0"	4.0"	4.0"		4.0"	4.0"	3.6"	2.8"	2.4"	2.9"	3.8"	4.0"	4.0"	4.0"
	+/- 60 PSF	763.0 LB/FT	540.1 LB/FT	4.0"	4.0"	4.0"	4.0"		4.0"	4.0"		2.3"	2.0"	2.3"	3.1"	4.0"	4.0"	4.0"
	+/- 62 PSF	788.5 LB/FT	561.1 LB/FT	4.0"	4.0"	4.0"	4.0"		4.0"	4.0"		2.2"		2.3"	3.0"	4.0"	4.0"	4.0"
108"	+/- 40 PSF	616.6 LB/FT	390.2 LB/FT	4.0"	4.0"	4.0"	4.0"		4.0"	4.0"	3.8"	2.9"	2.5"	3.0"	4.0"	4.0"	4.0"	4.0"
	+/- 50 PSF	780.4 LB/FT	509.6 LB/FT	4.0"	4.0"	4.0"	4.0"		4.0"	4.0"		2.2"	2.0"	2.3"	3.2"	4.0"	4.0"	4.0"
	+/- 59 PSF	925.4 LB/FT	622.8 LB/FT		3.9"	4.0"	4.0"			4.0"					2.6"	3.6"	4.0"	
132"	+/- 40 PSF	877.4 LB/FT	504.5 LB/FT	4.0"	4.0"	4.0"	4.0"		4.0"	4.0"		2.0"		2.1"	3.1"	4.0"	4.0"	
	+/- 50 PSF	1098.8 LB/FT	658.5 LB/FT		3.4"	4.0"	4.0"			3.8"					2.4"	3.2"	4.0"	
	+/- 54 PSF	1182.0 LB/FT	719.5 LB/FT		3.1"	4.0"	4.0"			3.5"					2.2"	3.0"	4.0"	
144"	+/- 40 PSF	1013.0 LB/FT	561.8 LB/FT		3.8"	4.0"	4.0"			4.0"					2.7"	3.6"	4.0"	
	+/- 50 PSF	1265.5 LB/FT	734.0 LB/FT		3.0"	4.0"	4.0"			3.3"					2.1"	2.8"	4.0"	
	+/- 52 PSF	1305.4 LB/FT	762.6 LB/FT			4.0"	3.9"			3.2"					2.1"	2.7"	4.0"	
156"	+/- 40 PSF	1152.6 LB/FT	620.3 LB/FT		3.4"	4.0"	4.0"			3.8"					2.5"	3.2"	4.0"	
	+/- 50 PSF	1437.1 LB/FT	811.6 LB/FT			4.0"				3.0"						2.5"	4.0"	
168"	+/- 40 PSF	1296.2 LB/FT	680.1 LB/FT		3.0"	4.0"	4.0"			3.4"					2.2"	2.9"	4.0"	
	+/- 48 PSF	1557.2 LB/FT	852.3 LB/FT			4.0"										2.4"	4.0"	
180.0"	+/- 40 PSF	1443.9 LB/FT	741.4 LB/FT			4.0"				3.1"					2.0"	2.7"	4.0"	
	+/- 47 PSF	1680.5 LB/FT	895.3 LB/FT			3.9"										2.2"	4.0"	

ANCHOR NOTES: SEE SHEET 5 FOR ANCHOR NOTES.

FRANK L. BENNARDO, P.E.
#PE0060064
01/04/2013
FRANK L. BENNARDO P.E.
960 64
LICENSED
PROFESSIONAL ENGINEER
STATE OF TEXAS

FRANK L. BENNARDO, P.E.
160 SW 12th AVENUE, #106
DEERFIELD BEACH, FL 33442
PH: (954) 354-0660 FAX: (954) 354-0473
POWERED BY THE INNOVATIONS OF
ENGINEERING EXPRESS®
EXPERIENCE MORE AT WWW.ENGEXP.COM

ALUTECH UNITED, INC.
117 DIXON STREET
SELBYVILLE, DE 19975
PHONE: 302 - 436 - 6005 FAX: 302 - 436 - 5100

BARRACUDA ROLL-UP SHUTTER
TEXAS DEPARTMENT OF INSURANCE
PRODUCT APPROVAL

REMARKS	DRWN	CHKD	DATE
INIT ISSUE	CSL	TSB	01/02/13

THIS DOCUMENT IS THE PROPERTY OF FRANK L. BENNARDO, P.E AND SHALL NOT BE REPRODUCED IN ANY FORM WITHOUT THE WRITTEN PERMISSION OF FRANK L. BENNARDO, P.E.* ALTERATIONS, ADDITIONS, HIGHLIGHTING OR OTHER MARKINGS TO THIS DOCUMENT ARE NOT PERMITTED AND INVALIDATE OUR CERTIFICATION.

COPYRIGHT FRANK L. BENNARDO P.E.

12-AUI-03

SCALE: - 01

PAGE DESCRIPTION:
-
-

6 OF 12

01/04/2013 - 10:46am chen \\SERVER01\FileCabinet\01 Project Files\Alutech United, Inc (AUI)\2012\12-AUI-03 Barracuda Rollup\01 TDI SHU-151 Initial Submittal\12-AUI-03_01b Barracuda Roll-up Shutter (TDI).dwg

ANCHOR SCHEDULE:
BUILD-OUT MOUNT: END RETENTION SHUTTER WITH DOUBLE WALL SLATS

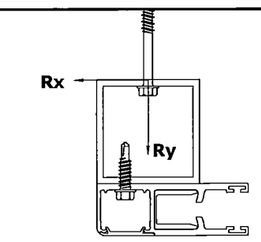

SLAT SPAN	DESIGN PRESSURE	Rx	Ry	MAXIMUM SPACING (O.C.)													
				1/4" ELCO ULTRACON TO 2846 PSI MIN. CONCRETE; 1.75" MIN. EMBEDMENT; 2.5" MIN. EDGE DISTANCE	1/4" SS ITW TAPCON TO 3192 PSI MIN. CONCRETE; 1.75" MIN. EMBEDMENT; 2.5" MIN. EDGE DISTANCE	5/16" ITW TAPCON TO 2899 PSI MIN. CONCRETE; 2.25" MIN. EMBEDMENT; 3.125" MIN. EDGE DISTANCE	5/16" ITW TAPCON TO GROUT-FILLED CONCRETE BLOCK; 2.25" MIN. EMBEDMENT; 4" MIN. EDGE DISTANCE	5/16" ITW TAPCON TO HOLLOW CONCRETE BLOCK; 1.75" MIN. EMBEDMENT; 4" MIN. EDGE DISTANCE	1/4" POWERS POWER-BOLT TO 3000 PSI MIN. CONCRETE; 2.5" MIN. EMBEDMENT; 3" MIN. EDGE DISTANCE	1/4" ALL-POINTS SOLID-SET TO 3000 PSI MIN. CONCRETE; 0.875" MIN. EMBEDMENT; 3" MIN. EDGE DISTANCE	1/4" ALL-POINTS SOLID-SET TO HOLLOW BLOCK; 0.875" MIN. EMBEDMENT; 3" MIN. EDGE DISTANCE	1/4" LAG SCREW TO G=0.55 MIN WOOD; 1.5" MIN. EMBEDMENT; 0.75" MIN. EDGE DISTANCE	5/16" LAG SCREW TO G=0.42 MIN WOOD; 2" MIN. EMBEDMENT; 0.75" MIN. EDGE DISTANCE	#14 WOOD SCREW TO G=0.55 MIN WOOD; 1.5" MIN. EMBEDMENT; 0.75" MIN. EDGE DISTANCE	#14 316 SS SMS W/ FULL THREAD PENETRATION (OR 1/4-20 316 SS THRU-BOLT) W/ 5/8" WASHER TO 0.125" MIN. 6063-T5 ALUM; 0.5" MIN. EDGE DISTANCE	#14 316 SS SMS W/ FULL THREAD PENETRATION (OR 1/4-20 316 SS THRU-BOLT) W/ 5/8" WASHER TO 0.25" MIN. 6063-T5 ALUM; 0.5" MIN. EDGE DISTANCE	3/8" POWERS WEDGE BOLT TO 3000 PSI MIN. CONCRETE; 3.5" MIN. EMBEDMENT; 4.5" MIN. EDGE DISTANCE
48"	+/- 40 PSF	0.0 LB/FT	133.4 LB/FT	4.0"	4.0"	4.0"	4.0"	4.0"	4.0"	4.0"	4.0"	4.0"	4.0"	4.0"	4.0"	4.0"	4.0"
	+/- 50 PSF	0.0 LB/FT	166.7 LB/FT	4.0"	4.0"	4.0"	4.0"	4.0"	4.0"	4.0"	4.0"	4.0"	4.0"	4.0"	4.0"	4.0"	4.0"
	+/- 60 PSF	0.0 LB/FT	200.0 LB/FT	4.0"	4.0"	4.0"	4.0"	4.0"	4.0"	4.0"	4.0"	4.0"	4.0"	4.0"	4.0"	4.0"	4.0"
	+/- 70 PSF	40.3 LB/FT	260.7 LB/FT	4.0"	4.0"	4.0"	4.0"	4.0"	4.0"	4.0"	4.0"	4.0"	4.0"	4.0"	4.0"	4.0"	4.0"
	+/- 80 PSF	89.5 LB/FT	331.6 LB/FT	4.0"	4.0"	4.0"	4.0"	4.0"	4.0"	4.0"	4.0"	4.0"	4.0"	4.0"	4.0"	4.0"	4.0"
	+/- 90 PSF	137.6 LB/FT	406.2 LB/FT	4.0"	4.0"	4.0"	4.0"	4.0"	4.0"	4.0"	4.0"	4.0"	4.0"	4.0"	4.0"	4.0"	4.0"
	+/- 100 PSF	184.6 LB/FT	484.4 LB/FT	4.0"	4.0"	4.0"	4.0"	4.0"	4.0"	4.0"	4.0"	4.0"	4.0"	4.0"	4.0"	4.0"	4.0"
	+/- 113 PSF	245.3 LB/FT	593.8 LB/FT	4.0"	4.0"	4.0"	4.0"		4.0"	4.0"	4.0"	4.0"	4.0"	4.0"	3.6"	4.0"	4.0"
60"	+/- 40 PSF	81.4 LB/FT	216.7 LB/FT	4.0"	4.0"	4.0"	4.0"	4.0"	4.0"	4.0"	4.0"	4.0"	4.0"	4.0"	4.0"	4.0"	4.0"
	+/- 50 PSF	150.7 LB/FT	306.6 LB/FT	4.0"	4.0"	4.0"	4.0"	4.0"	4.0"	4.0"	4.0"	4.0"	4.0"	4.0"	4.0"	4.0"	4.0"
	+/- 60 PSF	219.0 LB/FT	400.8 LB/FT	4.0"	4.0"	4.0"	4.0"	4.0"	4.0"	4.0"	4.0"	4.0"	4.0"	4.0"	4.0"	4.0"	4.0"
	+/- 70 PSF	286.0 LB/FT	499.2 LB/FT	4.0"	4.0"	4.0"	4.0"	4.0"	4.0"	4.0"	4.0"	4.0"	4.0"	4.0"	4.0"	4.0"	4.0"
	+/- 80 PSF	351.9 LB/FT	601.7 LB/FT	4.0"	4.0"	4.0"	4.0"		4.0"	4.0"	4.0"	3.6"	3.9"	3.4"	4.0"	4.0"	4.0"
	+/- 84 PSF	380.5 LB/FT	648.1 LB/FT	4.0"	4.0"	4.0"	4.0"		4.0"	4.0"	3.7"	3.7"	3.4"	3.6"	3.1"	4.0"	4.0"
72"	+/- 40 PSF	230.3 LB/FT	340.4 LB/FT	4.0"	4.0"	4.0"	4.0"	4.0"	4.0"	4.0"	4.0"	4.0"	4.0"	4.0"	4.0"	4.0"	4.0"
	+/- 50 PSF	320.3 LB/FT	456.6 LB/FT	4.0"	4.0"	4.0"	4.0"	4.0"	4.0"	4.0"	4.0"	4.0"	4.0"	4.0"	4.0"	4.0"	4.0"
	+/- 60 PSF	408.9 LB/FT	578.4 LB/FT	4.0"	4.0"	4.0"	4.0"		4.0"	4.0"	3.8"	3.6"	3.3"	3.6"	3.4"	4.0"	4.0"
	+/- 70 PSF	496.1 LB/FT	705.3 LB/FT	4.0"	4.0"	4.0"	4.0"		4.0"	4.0"	3.2"	3.0"	2.7"	3.0"	2.8"	4.0"	4.0"
	+/- 72 PSF	516.8 LB/FT	736.6 LB/FT	4.0"	4.0"	4.0"	4.0"		4.0"	4.0"	3.0"	2.9"	2.6"	2.8"	2.7"	3.9"	4.0"
84"	+/- 40 PSF	362.9 LB/FT	449.2 LB/FT	4.0"	4.0"	4.0"	4.0"	4.0"	4.0"	4.0"	4.0"	4.0"	3.8"	4.0"	4.0"	4.0"	4.0"
	+/- 50 PSF	475.8 LB/FT	591.9 LB/FT	4.0"	4.0"	4.0"	4.0"		4.0"	4.0"	3.6"	3.2"	2.9"	3.2"	3.2"	4.0"	4.0"
	+/- 60 PSF	587.0 LB/FT	741.6 LB/FT	4.0"	4.0"	4.0"	4.0"		4.0"	4.0"		2.6"	2.3"	2.6"	2.6"	3.8"	4.0"
	+/- 66 PSF	652.7 LB/FT	834.6 LB/FT		4.0"	4.0"	4.0"			4.0"		2.3"	2.1"	2.3"	2.3"	3.3"	4.0"
96"	+/- 40 PSF	490.1 LB/FT	551.1 LB/FT	4.0"	4.0"	4.0"	4.0"		4.0"	4.0"	3.7"	3.2"	2.9"	3.2"	3.4"	4.0"	4.0"
	+/- 50 PSF	627.7 LB/FT	721.2 LB/FT	4.0"	4.0"	4.0"	4.0"		4.0"	4.0"		2.5"	2.2"	2.5"	2.6"	3.8"	4.0"
	+/- 60 PSF	763.0 LB/FT	900.3 LB/FT		3.7"	4.0"	4.0"			4.0"		2.0"		2.0"	2.1"	3.0"	4.0"
	+/- 62 PSF	788.5 LB/FT	935.3 LB/FT		3.5"	4.0"	4.0"			3.9"		2.0"		2.0"	2.0"	2.9"	4.0"
108"	+/- 40 PSF	616.6 LB/FT	650.4 LB/FT	4.0"	4.0"	4.0"	4.0"		4.0"	4.0"	3.0"	2.6"	2.3"	2.6"	2.9"	4.0"	4.0"
	+/- 50 PSF	780.4 LB/FT	849.5 LB/FT		3.7"	4.0"	4.0"			4.0"		2.0"		2.0"	2.2"	3.1"	4.0"
	+/- 59 PSF	925.4 LB/FT	1038.2 LB/FT		3.1"	4.0"	4.0"			3.4"						2.6"	4.0"
132"	+/- 40 PSF	877.4 LB/FT	841.0 LB/FT		3.5"	4.0"	4.0"			3.9"					2.2"	3.0"	4.0"
	+/- 50 PSF	1098.8 LB/FT	1097.7 LB/FT			4.0"				3.0"						2.4"	4.0"
	+/- 54 PSF	1182.0 LB/FT	1199.4 LB/FT			4.0"										2.2"	4.0"
144"	+/- 40 PSF	1013.0 LB/FT	936.6 LB/FT		3.1"	4.0"	4.0"			3.4"						2.7"	4.0"
	+/- 50 PSF	1265.5 LB/FT	1223.6 LB/FT			3.9"										2.1"	4.0"
	+/- 52 PSF	1305.4 LB/FT	1271.2 LB/FT			3.8"										2.0"	4.0"
156"	+/- 40 PSF	1152.6 LB/FT	1034.0 LB/FT			4.0"				3.0"						2.4"	4.0"
	+/- 50 PSF	1437.1 LB/FT	1352.9 LB/FT														4.0"
168"	+/- 40 PSF	1296.2 LB/FT	1133.7 LB/FT			4.0"										2.2"	4.0"
	+/- 48 PSF	1557.2 LB/FT	1420.8 LB/FT														4.0"
180.0"	+/- 40 PSF	1443.9 LB/FT	1236.0 LB/FT													2.0"	4.0"
	+/- 47 PSF	1680.5 LB/FT	1492.4 LB/FT														4.0"

ANCHOR NOTES: SEE SHEET 5 FOR ANCHOR NOTES.

FRANK L. BENNARDO, P.E.
PROFESSIONAL ENGINEER
960[illegible]
LICENSED
01/04/2013
FRANK L. BENNARDO, P.E.
160 SW 12th AVENUE #103
DEERFIELD BEACH, FL 33442
PH: (954) 354-0660 FAX: (954) 354-0664
POWERED BY THE INNOVATIONS OF
ENGINEERING EXPRESS®
EXPERIENCE MORE AT WWW.ENGEXP.COM

ALUTECH UNITED, INC.
117 DIXON STREET
SELBYVILLE, DE 19975
PHONE: 302 - 436 - 6005 FAX: 302 - 436 - 5100

BARRACUDA ROLL-UP SHUTTER
TEXAS DEPARTMENT OF INSURANCE
PRODUCT APPROVAL

REMARKS	DRWN	CHKD	DATE
INIT ISSUE	CSL	TSB	01/02/13

THIS DOCUMENT IS THE PROPERTY OF FRANK L. BENNARDO, P.E. AND SHALL NOT BE REPRODUCED IN WHOLE OR IN PART WITHOUT THE WRITTEN CONSENT OF FRANK L. BENNARDO, P.E. " ALTERATIONS, ADDITIONS, HIGHLIGHTING, OR OTHER MARKINGS TO THIS DOCUMENT ARE NOT PERMITTED AND INVALIDATE OUR CERTIFICATION.

COPYRIGHT FRANK L. BENNARDO P.E.

12-AUI-03
SCALE: - 01
PAGE DESCRIPTION:
-
-

7 OF 12

01/04/2013 - 10:46am chen \\SERVER01\FileCabinet\01 Project Files\Alutech United, Inc (AUI)\2012\12-AUI-03_01b Barracuda Rollup\01 TDI SHU-151 Initial Submittal\12-AUI-03_01b Barracuda Rollup Shutter (TDI).dwg

ANCHOR SCHEDULE:
INTERIOR MOUNT: END RETENTION SHUTTER WITH DOUBLE WALL SLATS

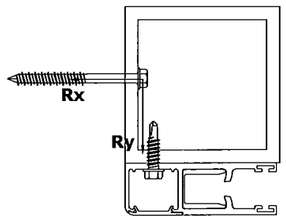

SLAT SPAN	DESIGN PRESSURE	Rx	Ry	MAXIMUM SPACING (O.C.) 1/4" ELCO ULTRACON TO 2846 PSI MIN. CONCRETE; 1.75" MIN. EMBEDMENT; 2.5" MIN. EDGE DISTANCE	1/4" SS ITW TAPCON TO 3192 PSI MIN. CONCRETE; 1.75" MIN. EMBEDMENT; 2.5" MIN. EDGE DISTANCE	5/16" ITW TAPCON TO 2899 PSI MIN. CONCRETE; 2.25" MIN. EMBEDMENT; 3.125" MIN. EDGE DISTANCE	5/16" ITW TAPCON TO GROUT-FILLED CONCRETE BLOCK; 2.25" MIN. EMBEDMENT; 4" MIN. EDGE DISTANCE	5/16" ITW TAPCON TO HOLLOW CONCRETE BLOCK; 1.75" MIN. EMBEDMENT; 4" MIN. EDGE DISTANCE	1/4" POWERS POWER-BOLT TO 3000 PSI MIN. CONCRETE; 2.5" MIN. EMBEDMENT; 3" MIN. EDGE DISTANCE	1/4" ALL-POINTS SOLID-SET TO 3000 PSI MIN. CONCRETE; 0.875" MIN. EMBEDMENT; 3" MIN. EDGE DISTANCE	1/4" ALL-POINTS SOLID-SET TO HOLLOW BLOCK; 0.875" MIN. EMBEDMENT; 3" MIN. EDGE DISTANCE	1/4" LAG SCREW TO G=0.55 MIN WOOD; 1.5" MIN. EMBEDMENT; 0.75" MIN. EDGE DISTANCE	5/16" LAG SCREW TO G=0.42 MIN WOOD; 2" MIN. EMBEDMENT; 0.75" MIN. EDGE DISTANCE	#14 WOOD SCREW TO G=0.55 MIN WOOD; 1.5" MIN. EMBEDMENT; 0.75" MIN. EDGE DISTANCE	#14 316 SS SMS W/ FULL THREAD PENETRATION (OR 1/4-20 316 SS THRU-BOLT) W/ 5/8" WASHER TO 0.125" MIN. 6063-T5 ALUM; 0.5" MIN. EDGE DISTANCE	#14 316 SS SMS W/ FULL THREAD PENETRATION (OR 1/4-20 316 SS THRU-BOLT) W/ 5/8" WASHER TO 0.25" MIN. 6063-T5 ALUM; 0.5" MIN. EDGE DISTANCE	3/8" POWERS WEDGE BOLT TO 3000 PSI MIN. CONCRETE; 3.5" MIN. EMBEDMENT; 4.5" MIN. EDGE DISTANCE
48"	+/- 40 PSF	53.4 LB/FT	80.0 LB/FT	4.0"	4.0"	4.0"	4.0"	4.0"	4.0"	4.0"	4.0"	4.0"	4.0"	4.0"	4.0"	4.0"
	+/- 50 PSF	66.7 LB/FT	100.0 LB/FT	4.0"	4.0"	4.0"	4.0"	4.0"	4.0"	4.0"	4.0"	4.0"	4.0"	4.0"	4.0"	4.0"
	+/- 60 PSF	80.0 LB/FT	120.0 LB/FT	4.0"	4.0"	4.0"	4.0"	4.0"	4.0"	4.0"	4.0"	4.0"	4.0"	4.0"	4.0"	4.0"
	+/- 70 PSF	144.7 LB/FT	156.4 LB/FT	4.0"	4.0"	4.0"	4.0"	4.0"	4.0"	4.0"	4.0"	4.0"	4.0"	4.0"	4.0"	4.0"
	+/- 80 PSF	222.1 LB/FT	198.9 LB/FT	4.0"	4.0"	4.0"	4.0"	4.0"	4.0"	4.0"	4.0"	4.0"	4.0"	4.0"	4.0"	4.0"
	+/- 90 PSF	300.1 LB/FT	243.7 LB/FT	4.0"	4.0"	4.0"	4.0"	4.0"	4.0"	4.0"	4.0"	4.0"	4.0"	4.0"	4.0"	4.0"
	+/- 100 PSF	378.4 LB/FT	290.6 LB/FT	4.0"	4.0"	4.0"	4.0"	4.0"	4.0"	4.0"	4.0"	4.0"	4.0"	4.0"	4.0"	4.0"
	+/- 113 PSF	482.9 LB/FT	356.2 LB/FT	4.0"	4.0"	4.0"	4.0"	3.9"	4.0"	4.0"	4.0"	3.8"	4.0"	4.0"	4.0"	4.0"
60"	+/- 40 PSF	168.2 LB/FT	130.0 LB/FT	4.0"	4.0"	4.0"	4.0"	4.0"	4.0"	4.0"	4.0"	4.0"	4.0"	4.0"	4.0"	4.0"
	+/- 50 PSF	273.4 LB/FT	183.9 LB/FT	4.0"	4.0"	4.0"	4.0"	4.0"	4.0"	4.0"	4.0"	4.0"	4.0"	4.0"	4.0"	4.0"
	+/- 60 PSF	379.3 LB/FT	240.4 LB/FT	4.0"	4.0"	4.0"	4.0"	4.0"	4.0"	4.0"	4.0"	4.0"	4.0"	4.0"	4.0"	4.0"
	+/- 70 PSF	485.8 LB/FT	299.5 LB/FT	4.0"	4.0"	4.0"	4.0"	4.0"	4.0"	4.0"	4.0"	4.0"	4.0"	4.0"	4.0"	4.0"
	+/- 80 PSF	592.7 LB/FT	361.0 LB/FT	4.0"	4.0"	4.0"	4.0"		4.0"	4.0"	4.0"	3.9"	3.6"	3.9"	3.4"	4.0"
	+/- 84 PSF	639.8 LB/FT	388.8 LB/FT	4.0"	4.0"	4.0"	4.0"		4.0"	4.0"	4.0"	3.7"	3.7"	3.3"	3.6"	3.2"	4.0"	4.0"
72"	+/- 40 PSF	366.4 LB/FT	204.2 LB/FT	4.0"	4.0"	4.0"	4.0"	4.0"	4.0"	4.0"	4.0"	4.0"	4.0"	4.0"	4.0"	4.0"
	+/- 50 PSF	503.0 LB/FT	273.9 LB/FT	4.0"	4.0"	4.0"	4.0"	4.0"	4.0"	4.0"	4.0"	4.0"	4.0"	4.0"	4.0"	4.0"
	+/- 60 PSF	640.3 LB/FT	346.9 LB/FT	4.0"	4.0"	4.0"	4.0"		4.0"	4.0"	3.8"	3.9"	3.6"	3.8"	3.2"	4.0"	4.0"
	+/- 70 PSF	778.3 LB/FT	423.1 LB/FT	4.0"	4.0"	4.0"	4.0"		4.0"	4.0"	3.2"	3.2"	3.0"	3.2"	2.6"	3.9"	4.0"
	+/- 72 PSF	811.5 LB/FT	441.9 LB/FT	4.0"	4.0"	4.0"	4.0"		4.0"	4.0"	3.0"	3.1"	2.8"	3.0"	2.5"	3.8"	4.0"
84"	+/- 40 PSF	542.7 LB/FT	269.4 LB/FT	4.0"	4.0"	4.0"	4.0"	3.8"	4.0"	4.0"	4.0"	4.0"	4.0"	4.0"	3.8"	4.0"	4.0"
	+/- 50 PSF	712.7 LB/FT	355.0 LB/FT	4.0"	4.0"	4.0"	4.0"		4.0"	4.0"	3.6"	3.7"	3.4"	3.6"	2.9"	4.0"	4.0"
	+/- 60 PSF	883.7 LB/FT	444.8 LB/FT	4.0"	4.0"	4.0"	4.0"			4.0"		3.0"	2.7"	2.9"	2.3"	3.5"	4.0"
	+/- 66 PSF	986.7 LB/FT	500.7 LB/FT		4.0"	4.0"	4.0"			4.0"		2.7"	2.4"	2.6"	2.1"	3.1"	4.0"
96"	+/- 40 PSF	710.6 LB/FT	330.6 LB/FT	4.0"	4.0"	4.0"	4.0"		4.0"	4.0"	3.6"	3.9"	3.6"	3.8"	3.0"	4.0"	4.0"
	+/- 50 PSF	916.3 LB/FT	432.7 LB/FT	4.0"	4.0"	4.0"	4.0"			4.0"		3.0"	2.8"	2.9"	2.3"	3.4"	4.0"
	+/- 60 PSF	1123.2 LB/FT	540.1 LB/FT		3.8"	4.0"	4.0"			4.0"		2.4"	2.2"	2.3"		2.8"	4.0"
	+/- 62 PSF	1162.7 LB/FT	561.1 LB/FT		3.6"	4.0"	4.0"			3.8"		2.3"	2.1"	2.3"		2.7"	4.0"
108"	+/- 40 PSF	876.9 LB/FT	390.2 LB/FT	4.0"	4.0"	4.0"	4.0"		4.0"	4.0"	3.0"	3.3"	3.0"	3.1"	2.4"	3.6"	4.0"
	+/- 50 PSF	1120.3 LB/FT	509.6 LB/FT		3.8"	4.0"	4.0"			4.0"		2.5"	2.3"	2.4"		2.8"	4.0"
	+/- 59 PSF	1340.8 LB/FT	622.8 LB/FT		3.2"	4.0"	4.0"			3.4"		2.1"		2.0"		2.4"	4.0"
132"	+/- 40 PSF	1213.9 LB/FT	504.5 LB/FT		3.6"	4.0"	4.0"			3.8"		2.5"	2.3"	2.3"		2.7"	4.0"
	+/- 50 PSF	1538.1 LB/FT	658.5 LB/FT			4.0"	3.9"			3.0"						2.1"	4.0"
	+/- 54 PSF	1661.9 LB/FT	719.5 LB/FT			4.0"											4.0"
144"	+/- 40 PSF	1387.8 LB/FT	561.8 LB/FT		3.2"	4.0"	4.0"			3.4"		2.2"	2.0"	2.1"		2.3"	4.0"
	+/- 50 PSF	1755.0 LB/FT	734.0 LB/FT			3.9"											4.0"
	+/- 52 PSF	1814.1 LB/FT	762.6 LB/FT			3.8"											4.0"
156"	+/- 40 PSF	1566.3 LB/FT	620.3 LB/FT			4.0"	3.9"			3.0"		2.0"				2.1"	4.0"
	+/- 50 PSF	1978.5 LB/FT	811.6 LB/FT														4.0"
168"	+/- 40 PSF	1749.8 LB/FT	680.1 LB/FT			4.0"											4.0"
	+/- 48 PSF	2125.7 LB/FT	852.3 LB/FT														4.0"
180.0"	+/- 40 PSF	1938.4 LB/FT	741.4 LB/FT														4.0"
	+/- 47 PSF	2277.6 LB/FT	895.3 LB/FT														4.0"

ANCHOR NOTES: SEE SHEET 5 FOR ANCHOR NOTES.

STATE OF FLORIDA
FRANK L. BENNARDO, P.E.
#96064
FRANK L. BENNARDO
96064
LICENSED
PROFESSIONAL ENGINEER
01/04/2013

FRANK L. BENNARDO, P.E. # 96064
160 SW 12th AVENUE, SUITE 101
DEERFIELD BEACH, FL 33442
PH: (954) 354-0660 FAX: (954) 354-0662
POWERED BY THE INNOVATIONS OF ENGINEERING EXPRESS®
EXPERIENCE MORE AT WWW.ENGEXP.COM

ALUTECH UNITED, INC.
117 DIXON STREET
SELBYVILLE, DE 19975
PHONE: 302 - 436 - 6005 FAX: 302 - 436 - 5100

BARRACUDA ROLL-UP SHUTTER
TEXAS DEPARTMENT OF INSURANCE
PRODUCT APPROVAL

REMARKS	DRWN	CHKD	DATE
INIT ISSUE	CSL	TSB	01/02/13

THIS DOCUMENT IS THE PROPERTY OF FRANK L. BENNARDO, PE AND SHALL NOT BE REPRODUCED IN WHOLE OR PART WITHOUT WRITTEN CONSENT OF FRANK L. BENNARDO, PE. ALTERATIONS MADE TO THIS DOCUMENT NOT PERFORMED BY OR UNDER DIRECTION OF FRANK L. BENNARDO, PE ARE NOT TO BE CONSIDERED AS PART OF THIS DOCUMENT AND SHALL RELIEVE FRANK L. BENNARDO, PE OF RESPONSIBILITY FOR ANY DEVIATIONS FROM THE ORIGINAL DOCUMENT. ADDITIONS OR DELETIONS TO THIS DOCUMENT ARE NOT PERMITTED AND INVALIDATE OUR CERTIFICATION.

COPYRIGHT FRANK L. BENNARDO P.E.

12-AUI-03

SCALE: - 01

PAGE DESCRIPTION:
-
-

8

OF 12

01/04/2013 - 10:46am chen \\SERVER01\FileCabinet\01 Project Files\Alutech United, Inc (AUI)\2012\12-AUI-03 Barracuda Rollup\01 TDI SHU-151 Initial Submittal\12-AUI-03_01b Barracuda Roll-up Shutter (TDI).dwg

ANCHOR SCHEDULE:
END RETENTION SHUTTER WITH SINGLE WALL SLATS

ANCHOR NOTES: SEE SHEET 5 FOR ANCHOR NOTES.

SLAT SPAN	DESIGN PRESSURE	Rx	Ry	MAXIMUM SPACING (O.C.) 1/4" ELCO ULTRACON TO 2846 PSI MIN. CONCRETE; 1.75" MIN. EMBEDMENT; 2.5" MIN. EDGE DISTANCE	1/4" SS ITW TAPCON TO 3192 PSI MIN. CONCRETE; 1.75" MIN. EMBEDMENT; 2.5" MIN. EDGE DISTANCE	5/16" ITW TAPCON TO 2899 PSI MIN. CONCRETE; 2.25" MIN. EMBEDMENT; 3.125" MIN. EDGE DISTANCE	5/16" ITW TAPCON TO GROUT-FILLED CONCRETE BLOCK; 2.25" MIN. EMBEDMENT; 4" MIN. EDGE DISTANCE	5/16" ITW TAPCON TO HOLLOW CONCRETE BLOCK; 1.75" MIN. EMBEDMENT; 4" MIN. EDGE DISTANCE	1/4" POWERS POWER-BOLT TO 3000 PSI MIN. CONCRETE; 2.5" MIN. EMBEDMENT; 3" MIN. EDGE DISTANCE	1/4" ALL-POINTS SOLID-SET TO 3000 PSI MIN. CONCRETE; 0.875" MIN. EMBEDMENT; 3" MIN. EDGE DISTANCE	1/4" ALL-POINTS SOLID-SET TO HOLLOW BLOCK; 0.875" MIN. EMBEDMENT; 3" MIN. EDGE DISTANCE	1/4" LAG SCREW TO G=0.55 MIN WOOD; 1.5" MIN. EMBEDMENT; 0.75" MIN. EDGE DISTANCE	5/16" LAG SCREW TO G=0.42 MIN WOOD; 2" MIN. EMBEDMENT; 0.75" MIN. EDGE DISTANCE	#14 WOOD SCREW TO G=0.55 MIN WOOD; 1.5" MIN. EMBEDMENT; 0.75" MIN. EDGE DISTANCE	#14 316 SS SMS W/ FULL THREAD PENETRATION (OR 1/4-20 316 SS THRU-BOLT) W/ 5/8" WASHER TO 0.125" MIN. 6063-T5 ALUM; 0.5" MIN. EDGE DISTANCE	#14 316 SS SMS W/ FULL THREAD PENETRATION (OR 1/4-20 316 SS THRU-BOLT) W/ 5/8" WASHER TO 0.25" MIN. 6063-T5 ALUM; 0.5" MIN. EDGE DISTANCE	3/8" POWERS WEDGE BOLT TO 3000 PSI MIN. CONCRETE; 3.5" MIN. EMBEDMENT; 4.5" MIN. EDGE DISTANCE
WALL MOUNT																	
114"	+/- 25 PSF	426.4 LB/FT	253.8 LB/FT	4.0"	4.0"	4.0"	4.0"	4.0"	4.0"	4.0"	4.0"	4.0"	3.6"	4.0"	4.0"	4.0"	4.0"
	+/- 30 PSF	516.7 LB/FT	313.8 LB/FT	4.0"	4.0"	4.0"	4.0"	4.0"	4.0"	4.0"	4.0"	3.4"	3.0"	3.5"	4.0"	4.0"	4.0"
	+/- 35 PSF	606.1 LB/FT	376.3 LB/FT	4.0"	4.0"	4.0"	4.0"	3.8"	4.0"	4.0"	3.9"	2.9"	2.6"	3.0"	4.0"	4.0"	4.0"
	+/- 40 PSF	694.5 LB/FT	441.2 LB/FT	4.0"	4.0"	4.0"	4.0"		4.0"	4.0"	3.3"	2.5"	2.2"	2.6"	3.7"	4.0"	4.0"
	+/- 45 PSF	782.0 LB/FT	508.3 LB/FT	4.0"	4.0"	4.0"	4.0"		4.0"	4.0"		2.2"	2.0"	2.3"	3.2"	4.0"	4.0"
	+/- 50 PSF	868.5 LB/FT	577.7 LB/FT		4.0"	4.0"	4.0"			4.0"		2.0"		2.1"	2.8"	3.8"	4.0"
BUILD-OUT MOUNT																	
114"	+/- 25 PSF	426.4 LB/FT	423.0 LB/FT	4.0"	4.0"	4.0"	4.0"	4.0"	4.0"	4.0"	4.0"	3.8"	3.4"	3.8"	4.0"	4.0"	4.0"
	+/- 30 PSF	516.7 LB/FT	523.2 LB/FT	4.0"	4.0"	4.0"	4.0"		4.0"	4.0"	3.7"	3.1"	2.8"	3.2"	3.5"	4.0"	4.0"
	+/- 35 PSF	606.1 LB/FT	627.4 LB/FT	4.0"	4.0"	4.0"	4.0"		4.0"	4.0"	3.1"	2.7"	2.4"	2.7"	2.9"	4.0"	4.0"
	+/- 40 PSF	694.5 LB/FT	735.4 LB/FT		4.0"	4.0"	4.0"			4.0"		2.3"	2.1"	2.3"	2.5"	3.6"	4.0"
	+/- 45 PSF	782.0 LB/FT	847.3 LB/FT		3.7"	4.0"	4.0"			4.0"		2.0"		2.0"	2.2"	3.1"	4.0"
	+/- 50 PSF	868.5 LB/FT	963.0 LB/FT		3.3"	4.0"	4.0"			3.6"						2.8"	4.0"
INTERIOR MOUNT																	
114"	+/- 25 PSF	595.6 LB/FT	253.8 LB/FT	4.0"	4.0"	4.0"	4.0"		4.0"	4.0"	4.0"	4.0"	4.0"	4.0"	3.6"	4.0"	4.0"
	+/- 30 PSF	726.0 LB/FT	313.8 LB/FT	4.0"	4.0"	4.0"	4.0"		4.0"	4.0"	3.7"	4.0"	3.7"	3.8"	2.9"	4.0"	4.0"
	+/- 35 PSF	857.1 LB/FT	376.3 LB/FT	4.0"	4.0"	4.0"	4.0"		4.0"	4.0"	3.1"	3.4"	3.1"	3.2"	2.5"	3.7"	4.0"
	+/- 40 PSF	988.8 LB/FT	441.2 LB/FT		4.0"	4.0"	4.0"			4.0"		2.9"	2.7"	2.8"	2.1"	3.2"	4.0"
	+/- 45 PSF	1121.0 LB/FT	508.3 LB/FT		3.8"	4.0"	4.0"			4.0"		2.5"	2.3"	2.4"		2.8"	4.0"
	+/- 50 PSF	1253.8 LB/FT	577.7 LB/FT		3.4"	4.0"	4.0"			3.6"		2.2"	2.1"	2.1"		2.5"	4.0"

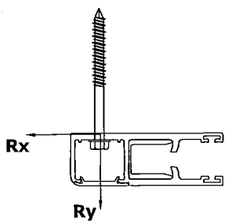

WALL MOUNT

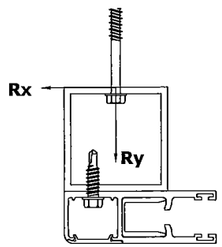

BUILD-OUT MOUNT

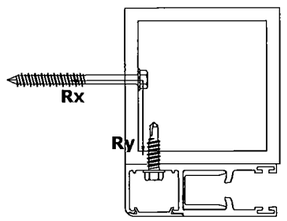

INTERIOR MOUNT

STATE OF TEXAS
FRANK L. BENNARDO, P.E.
#96064
01/04/2013

FRANK L. BENNARDO, P.E.
#96064
160 SW 12th AVENUE, SUITE 106
DEERFIELD BEACH, FL 33442
Ph: (954) 354-0660 Fax: (954) 354-0445
POWERED BY THE INNOVATIONS OF
ENGINEERING EXPRESS®
EXPERIENCE MORE AT WWW.ENGEXP.COM

ALUTECH UNITED, INC.
117 DIXON STREET
SELBYVILLE, DE 19975
PHONE: 302 - 436 - 6005 FAX: 302 - 436 - 5100

BARRACUDA ROLL-UP SHUTTER
TEXAS DEPARTMENT OF INSURANCE
PRODUCT APPROVAL

REMARKS	DRWN	CHKD	DATE
INIT ISSUE	CSL	TSB	01/02/13

THIS DOCUMENT IS THE PROPERTY OF FRANK L. BENNARDO, P.E. AND SHALL NOT BE REPRODUCED IN WHOLE OR PART WITHOUT WRITTEN CONSENT OF FRANK L. BENNARDO, P.E. ANY REPRODUCTION, ALTERATION, MODIFICATION, OR OTHER WORKS TO THIS DOCUMENT MADE BY PERSONS OTHER THAN FRANK L. BENNARDO, P.E. WITHOUT HIS WRITTEN CONSENT IS UNAUTHORIZED.
COPYRIGHT FRANK L. BENNARDO P.E.

12-AUI-03

SCALE: - 01

PAGE DESCRIPTION:
-
-

9 OF 12

01/04/2013 - 10:46am chen \\SERVER01\FileCabinet\01 Project Files\Alutech United, Inc (AUI)\2012\12-AUI-03 Barracuda Rollup\01 TDI SHU-151 Initial Submittal\12-AUI-03_01b Barracuda Roll-up Shutter (TDI).dwg

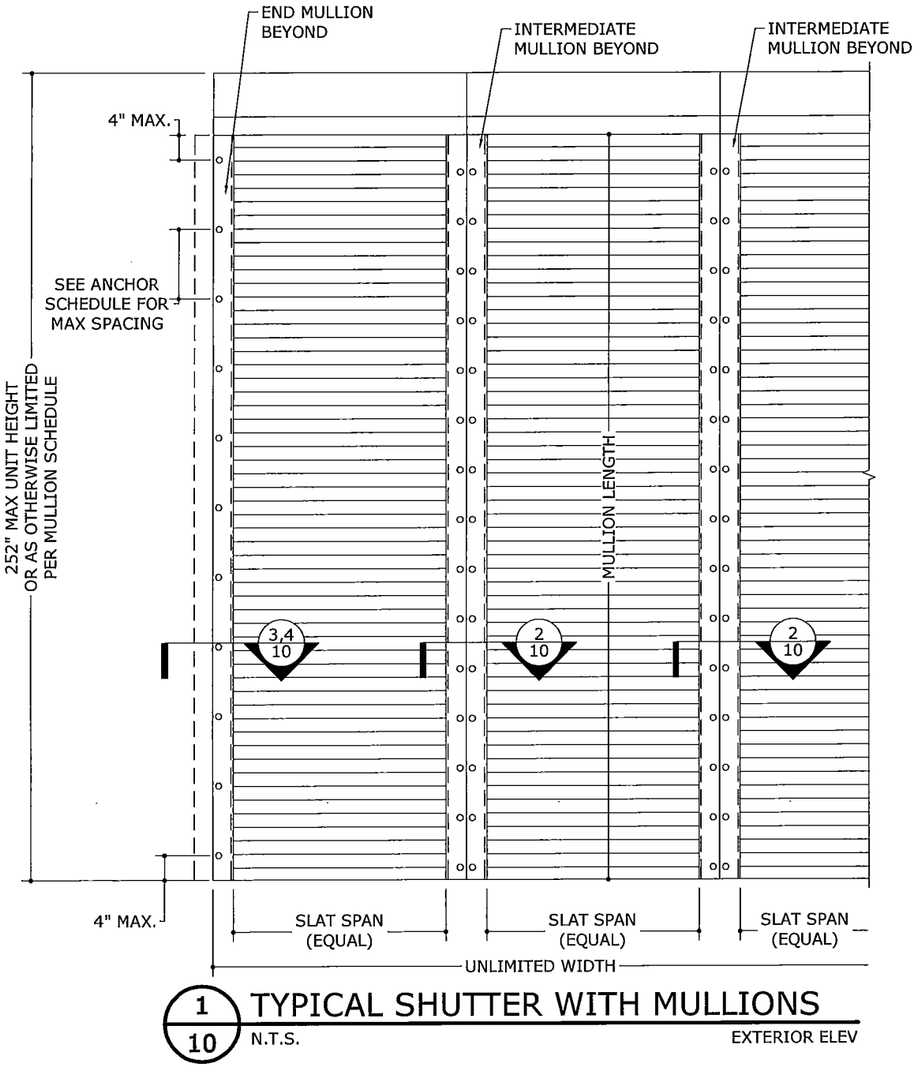

1 / 10 TYPICAL SHUTTER WITH MULLIONS

N.T.S. EXTERIOR ELEV

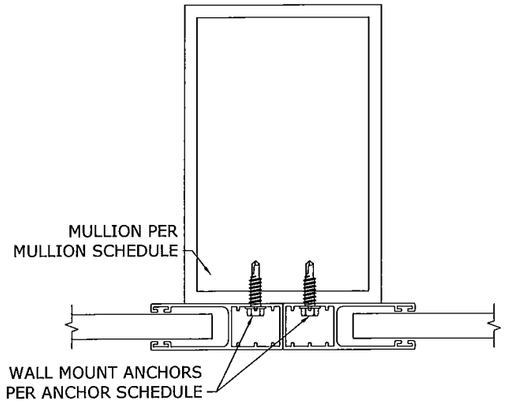

NOTE: SEE SHEET 4 FOR ADDITIONAL LIMITATIONS AND REQUIREMENTS. NON-END RETENTION SHUTTER SHOWN HERE. END RETENTION SHUTTER WALL MOUNT TO MULLION SIMILAR, SEE DETAIL 2/4.

2 / 10 TYPICAL MOUNT TO INTERMEDIATE MULLION

N.T.S. HORIZ SECTION

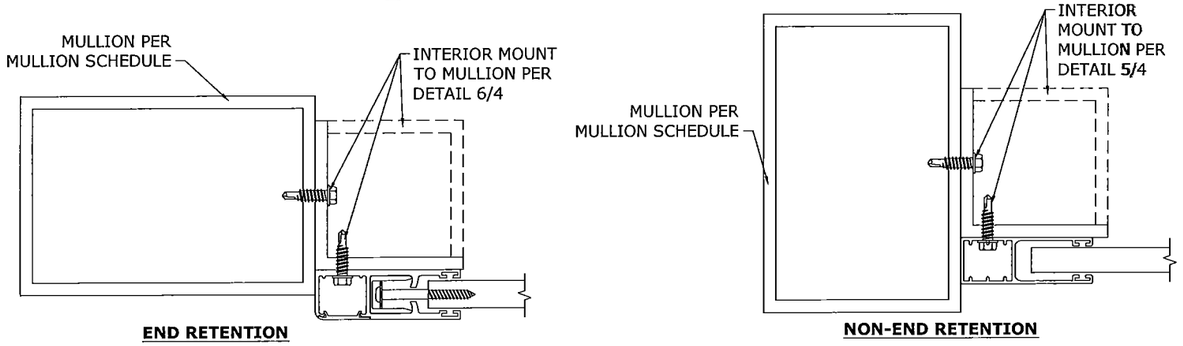

3 / 10 INTERIOR MOUNT TO END MULLION

N.T.S. HORIZ SECTION

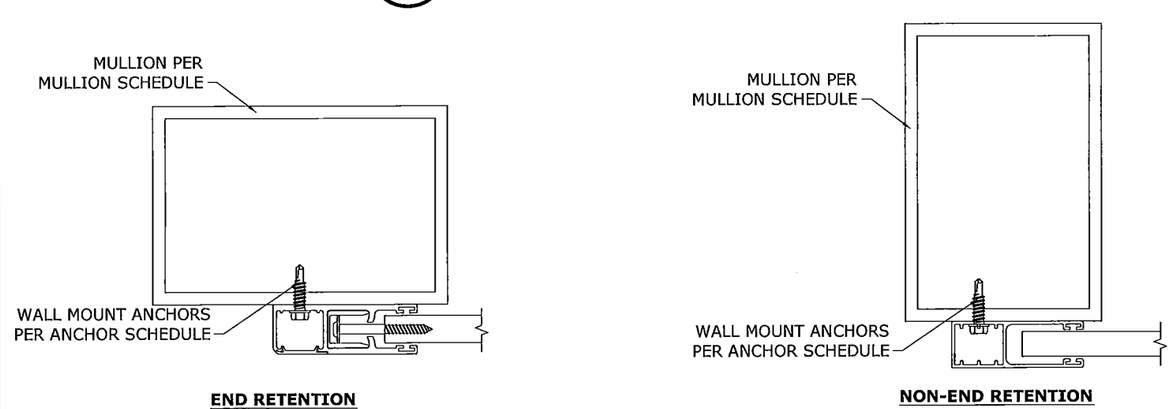

4 / 10 WALL MOUNT TO END MULLION

N.T.S. HORIZ SECTION

FRANK L. BENNARDO, P.E.
#PE09064
01/04/2013
FRANK L. BENNARDO, P.E.
160 SW 12th AVENUE #106
DEERFIELD BEACH, FL 33444
PH: (954) 354-0660 FAX: (954) 354-0445
POWERED BY THE INNOVATIONS
ENGINEERING EXPRESS®
EXPERIENCE MORE AT WWW.ENGEXP.COM

ALUTECH UNITED, INC.
117 DIXON STREET
SELBYVILLE, DE 19975
PHONE: 302 - 436 - 6005 FAX: 302 - 436 - 5100

BARRACUDA ROLL-UP SHUTTER
TEXAS DEPARTMENT OF INSURANCE
PRODUCT APPROVAL

REMARKS	DRWN	CHKD	DATE
INIT ISSUE	CSL	TSB	01/02/13

THIS DOCUMENT IS THE PROPERTY OF FRANK L. BENNARDO, P.E. AND SHALL NOT BE REPRODUCED IN WHOLE OR PART WITHOUT WRITTEN CONSENT OF FRANK L. BENNARDO, P.E. ALTERATIONS, ADDITIONS, HIGHLIGHTING, OR OTHER MARKINGS TO THIS DOCUMENT ARE NOT PERMITTED AND INVALIDATE OUR CERTIFICATION.
COPYRIGHT FRANK L. BENNARDO P.E.

12-AUI-03

SCALE: - 01

PAGE DESCRIPTION:

-

-

OF 12

10

01/04/2013 - 10:46am chen \\SERVER01\FileCabinet\01 Project Files\Alutech United, Inc (AUI)\2012\12-AUI-03 Barracuda Rollup\01 TDI SHU-151 Initial Submittal\12-AUI-03_01b Barracuda Roll-up Shutter (TDI).dwg

END RETENTION MULLION SCHEDULE

SLAT SPAN	DESIGN PRESSURE	3"x3"x0.25" 6063-T6 ALUMINUM TUBE						4"x6"x0.25" 6063-T6 ALUMINUM TUBE						4"x8"x0.25" 6063-T6 ALUMINUM TUBE					
		INTERMEDIATE MULLION		END MULLION				INTERMEDIATE MULLION		END MULLION				INTERMEDIATE MULLION		END MULLION			
		MAX MULLION LENGTH	END REACTION Rsum	MAX MULLION LENGTH	END REACTION Rv	END REACTION Rt	END REACTION Rsum	MAX MULLION LENGTH	END REACTION Rsum	MAX MULLION LENGTH	END REACTION Rv	END REACTION Rt	END REACTION Rsum	MAX MULLION LENGTH	END REACTION Rsum	MAX MULLION LENGTH	END REACTION Rv	END REACTION Rt	END REACTION Rsum
UP TO 96"	UP TO 60 PSF	55.1"	2480 LB	49.1"	1562 LB	1106 LB	1914 LB	102.6"	4620 LB	83.9"	2669 LB	1889 LB	3270 LB	126.3"	5685 LB	91.2"	2901 LB	2054 LB	3555 LB
	UP TO 113 PSF	54.1"	2529 LB	48.6"	1596 LB	1136 LB	1959 LB	100.7"	4709 LB	82.9"	2723 LB	1938 LB	3342 LB	123.9"	5795 LB	90.1"	2960 LB	2107 LB	3633 LB
UP TO 180"	UP TO 40 PSF	47.1"	2908 LB	38.8"	2332 LB	1198 LB	2622 LB	87.6"	5414 LB	69.1"	4157 LB	2135 LB	4673 LB	107.8"	6661 LB	81.9"	4928 LB	2531 LB	5540 LB
	UP TO 62 PSF	42.8"	3195 LB	35.7"	2500 LB	1332 LB	2833 LB	79.7"	5949 LB	63.6"	4452 LB	2372 LB	5044 LB	98.1"	7319 LB	75.3"	5273 LB	2809 LB	5975 LB

END RETENTION MULLION SCHEDULE NOTES:

1. "END RETENTION MULLION SCHEDULE" IS APPLICABLE TO ALL END RETENTION MULLIONS.
2. "INTERMEDIATE MULLIONS" AND "END MULLIONS" ARE AS DEFINED IN ELEVATION 1/10.
3. ALLOWABLE DESIGN PRESSURES AND SLAT SPANS INDICATED ARE FOR DETERMINING PERMISSIBLE MULLION LENGTHS ONLY. ACTUAL SLAT SPANS AND DESIGN PRESSURES SHALL NOT EXCEED THOSE INDICATED IN SPAN SCHEDULES.
4. "END REACTIONS" ARE LISTED FOR EACH COMBINATION OF DESIGN LOAD, MULLION TYPE, & SLAT SPAN. CHOOSE MOUNTING CONNECTIONS (PER APPLICABLE CONNECTION DETAILS HEREIN) THAT PROVIDES "CONNECTION CAPACITY" GREATER THAN OR EQUAL TO "END REACTIONS" GIVEN ABOVE.
5. THIS SCHEDULE MAY BE USED FOR ALL MOUNTING CONDITIONS LISTED HEREIN.
6. SEE MULLION HORIZONTAL SECTIONS ON SHEET 10 FOR REQUIRED MULLION ORIENTATIONS.

NON-END RETENTION MULLION SCHEDULE

3"x3"x0.25" 6063-T6 ALUMINUM TUBE				4"x6"x0.25" 6063-T6 ALUMINUM TUBE				4"x8"x0.25" 6063-T6 ALUMINUM TUBE			
INTERMEDIATE MULLION		END MULLION		INTERMEDIATE MULLION		END MULLION		INTERMEDIATE MULLION		END MULLION	
MAX MULLION LENGTH	END REACTION Rsum	MAX MULLION LENGTH	END REACTION Rsum	MAX MULLION LENGTH	END REACTION Rsum	MAX MULLION LENGTH	END REACTION Rsum	MAX MULLION LENGTH	END REACTION Rsum	MAX MULLION LENGTH	END REACTION Rsum
91.0"	910 LB	114.6"	574 LB	171.7"	1717 LB	216.3"	1082 LB	217.3"	2173 LB	240.0"	1200 LB

NON-END RETENTION MULLION SCHEDULE NOTES:

1. "NON-END RETENTION MULLION SCHEDULE" IS APPLICABLE TO NON-END RETENTION MULLIONS.
2. "INTERMEDIATE MULLIONS" AND "END MULLIONS" ARE AS DEFINED IN ELEVATION 1/10.
3. MULLION HEIGHTS NOTED ARE APPLICABLE TO ALL ALLOWABLE SHUTTER SPANS AND DESIGN PRESSURES NOTED IN NON-END RETENTION SPAN SCHEDULE.
4. "END REACTIONS" ARE LISTED FOR EACH MULLION TYPE. CHOOSE MOUNTING CONNECTIONS (PER APPLICABLE CONNECTION DETAILS HEREIN) THAT PROVIDES "CONNECTION CAPACITY" GREATER THAN OR EQUAL TO "END REACTIONS" GIVEN ABOVE.
5. THIS SCHEDULE MAY BE USED FOR ALL MOUNTING CONDITIONS LISTED HEREIN.
6. SEE MULLION HORIZONTAL SECTIONS ON SHEET 10 FOR REQUIRED MULLION ORIENTATIONS.

STATE OF FLORIDA
FRANK L. BENNARDO
96064
LICENSED
PROFESSIONAL ENGINEER
FRANK L. BENNARDO, P.E.
PE0096064
01/04/2013

FRANK L. BENNARDO, P.E.
160 SW 12th AVENUE, #206
DEERFIELD BEACH, FL 33442
PH: (954) 354-0660 FAX: (954) 354-0663
POWERED BY THE INNOVATIONS OF ENGINEERING EXPRESS®
EXPERIENCE MORE AT WWW.ENGEXP.COM

ALUTECH UNITED, INC.
117 DIXON STREET
SELBYVILLE, DE 19975
PHONE: 302 - 436 - 6005 FAX: 302 - 436 - 5100

BARRACUDA ROLL-UP SHUTTER
TEXAS DEPARTMENT OF INSURANCE
PRODUCT APPROVAL

REMARKS	DRWN	CHKD	DATE
INIT ISSUE	CSL	TSB	01/02/13

THIS DOCUMENT IS THE PROPERTY OF FRANK L. BENNARDO, P.E. AND SHALL NOT BE REPRODUCED IN WHOLE OR IN PART WITHOUT WRITTEN PERMISSION OF FRANK L. BENNARDO, P.E. * ALTERATIONS, ADDITIONS, MODELLISTING, OR OTHER MARKINGS TO THIS DOCUMENT ARE NOT PERMITTED AND INVALIDATE OUR CERTIFICATION.
COPYRIGHT FRANK L. BENNARDO P.E.

12-AUI-03
SCALE: - 01
PAGE DESCRIPTION:
-
-

01/04/2013 - 10:48am chen \\SERVER01\FileCabinet\01 Project Files\Alutech United, Inc (AUI)\2012\12-AUI-03 Barracuda Rollup\01 TDI SHU-151 Initial Submittal\12-AUI-03_01b Barracuda Roll-up Shutter (TDI).dwg

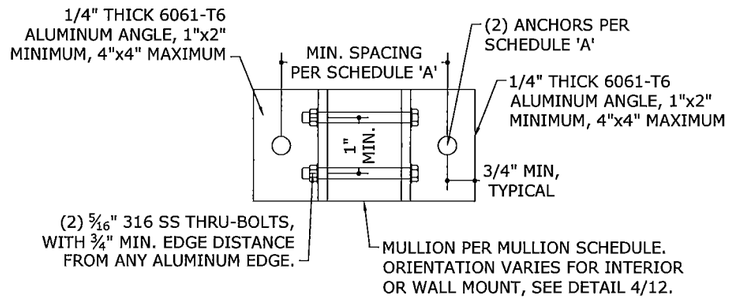

1/12 INTERIOR OR WALL MOUNT

N.T.S.

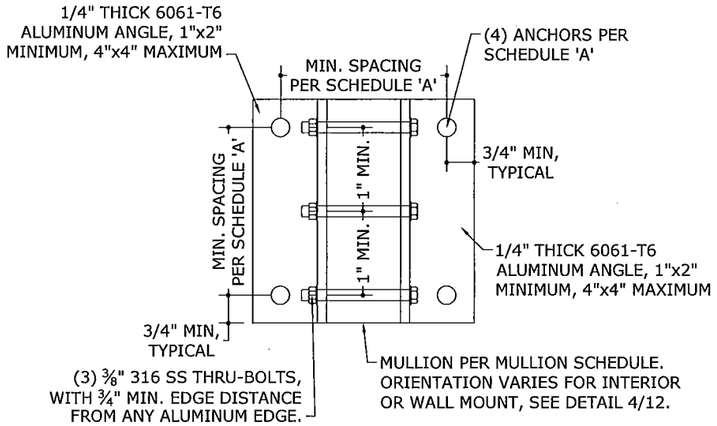

2/12 INTERIOR OR WALL MOUNT

N.T.S.

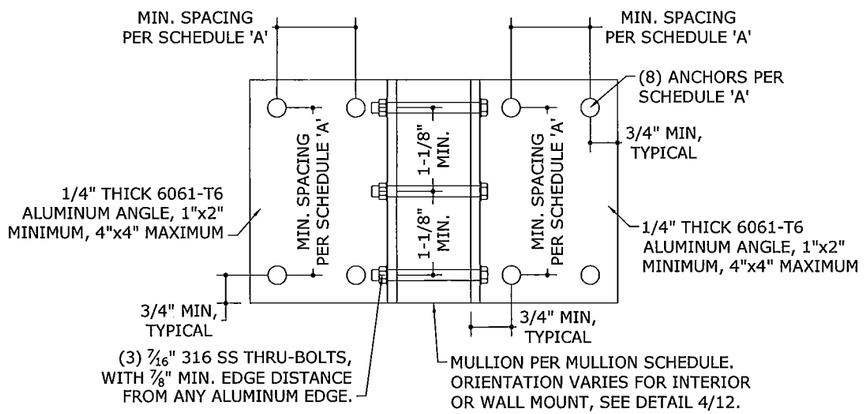

3/12 INTERIOR OR WALL MOUNT

N.T.S.

SCHEDULE 'A'

ANCHOR TYPE	MINIMUM SPACING	MINIMUM EDGE DISTANCE	CONNECTION DETAIL	CONNECTION CAPACITY	
3/8" POWERS WEDGE BOLTS W/ 3-1/2" EMBED TO 3KSI MIN. CONCRETE	4.5"	4.5"	1/12	Tcap	4410 LB
				Vcap	3065 LB
			2/12	Tcap	8820 LB
				Vcap	6130 LB
	2.5"	4.5"	3/12	Tcap	11819 LB
				Vcap	10176 LB
3/8" POWERS STEEL DROPIN W/ 1-9/16" EMBED TO 3KSI MIN. CONCRETE	4.5"	5.25"	1/12	Tcap	1590 LB
				Vcap	2290 LB
			2/12	Tcap	3180 LB
				Vcap	4580 LB
	2.5"	5.25"	3/12	Tcap	3689 LB
				Vcap	5313 LB
5/16" ITW TAPCON XL OR ELCO ULTRACON W/ 2-1/4" MIN. EMBED TO 3.515 KSI MIN. CONCRETE	5.0"	3.125"	1/12	Tcap	1576 LB
				Vcap	1700 LB
			2/12	Tcap	3152 LB
				Vcap	3400 LB

SCHEDULE 'A' NOTES:

1. INTERIOR MOUNT:
   - 1.1. FOR ALL MULLIONS, 'Rsum' VALUES IN MULLION SCHEDULE SHALL NOT EXCEED MAX 'Vcap' VALUES NOTED IN SCHEDULE 'A'.
2. WALL MOUNT:
   - 2.1. FOR INTERMEDIATE END RETENTION MULLIONS AND ALL NON-END RETENTION MULLIONS, 'Rsum' VALUES IN MULLION SCHEDULE SHALL NOT EXCEED MAX 'Tcap' VALUES NOTED IN SCHEDULE 'A'.
   - 2.2. FOR END RETENTION END MULLIONS, **Rv/Vcap + Rt/Tcap SHALL BE LESS THAN OR EQUAL TO 1.0**, WHERE 'Rv' AND 'Rt' ARE PER MULLION SCHEDULE, AND 'Tcap' AND 'Vcap' ARE PER SCHEDULE 'A'.

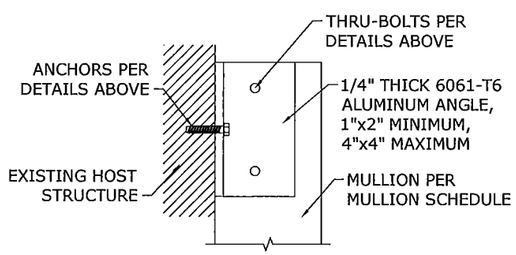

WALL MOUNT

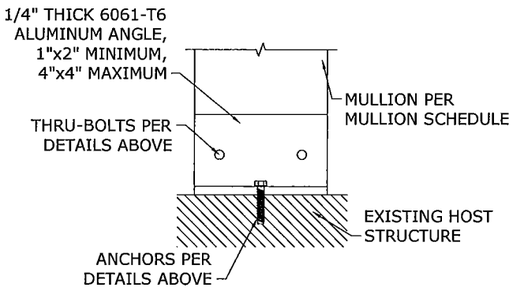

INTERIOR MOUNT

4/12 MOUNTING CONDITIONS VERTICAL SECTIONS

N.T.S.

FRANK L. BENNARDO, P.E. #96064
STATE OF FLORIDA
FRANK L. BENNARDO
96064
LICENSED
PROFESSIONAL ENGINEER
01/04/2013

FRANK L. BENNARDO, P.E.
160 SW 12th AVENUE, #106
DEERFIELD BEACH, FL 33442
PH: (954) 354-0660 FAX: (954) 354-0443
POWERED BY THE INNOVATIONS OF ENGINEERING EXPRESS®
EXPERIENCE MORE AT WWW.ENGEXP.COM

ALUTECH UNITED, INC.
117 DIXON STREET
SELBYVILLE, DE 19975
PHONE: 302 - 436 - 6005 FAX: 302 - 436 - 5100

BARRACUDA ROLL-UP SHUTTER
TEXAS DEPARTMENT OF INSURANCE
PRODUCT APPROVAL

REMARKS	DRWN	CHKD	DATE
INIT ISSUE	CSL	TSB	01/02/13

THIS DOCUMENT IS THE PROPERTY OF FRANK L. BENNARDO, P.E. AND SHALL NOT BE REPRODUCED IN WHOLE OR IN PART WITHOUT WRITTEN CONSENT OF FRANK L. BENNARDO, P.E. " ALTERATIONS, ADDITIONS, ERASURES, OR OTHER MARKINGS TO THIS DOCUMENT ARE NOT PERMITTED AND INVALIDATE OUR CERTIFICATION.

COPYRIGHT FRANK L. BENNARDO P.E.

12-AUI-03

SCALE: - 01

PAGE DESCRIPTION:
-
-

OF 12

12

01/04/2013 - 10:47am chen \\SERVER01\FileCabinet\01 Project Files\Alutech United, Inc (AUI)\2012\12-AUI-03 Barracuda Rollup\01 TDI SHU-151 Initial Submittal\12-AUI-03_01b Barracuda Roll-up Shutter (TDI).dwg