GENERAL NOTES:

1. THE BRICKHOUSE LOW PROFILE COLONIAL SHUTTER WAS TESTED IN ACCORDANCE WITH ASTM E 1886-04, E 1996-04 AND E 330-02 STANDARDS.

2. MAXIMUM OVERALL DIMENSIONS: 45 ¼" WIDE X 99" HIGH

3. THE MAXIMUM DESIGN PRESSURE RATING = +/- 60.0 PSF.

4. THE SHUTTER ASSEMBLY PASSED MISSILE LEVEL D SPECIFIED IN ASTM E 1996-04.

5. IN ACCORDANCE WITH INTERNATIONAL BUILDING CODE/INTERNATIONAL RESIDENTIAL CODE 2006, THE MAXIMUM ALLOWABLE BASIC WIND SPEED = 135 MPH WITH THE FOLLOWING DESIGN CRITERIA:
   A) BUILDING IMPORTANCE FACTOR = 1.0
   B) BUILDING EXPOSURE CATEGORY = C
   C) BUILDING ENCLOSURE CLASSIFICATION = ENCLOSED
   D) MEAN ROOF HEIGHT ≤ 25'
   E) ROOF SLOPE = 1/4:12 ≤ ROOF SLOPE ≤ 12:12

6. IF PROJECT DESIGN CRITERIA IS OUTSIDE THE CRITERIA MENTIONED ABOVE, SITE SPECIFIC ENGINEERING MUST BE DONE BY A REGISTERED PROFESSIONAL ENGINEER IN THAT STATE.

7. ALL ALUMINUM EXTRUSIONS SHALL BE ALUMINUM ASSOCIATION 6063-T5 OR 6063-T6 ALLOY AND TEMPER. THE THICKNESS OF THE EXTRUSIONS SHALL BE AS NOTED ON THE DRAWINGS WITH STANDARD TOLERANCES IN ACCORDANCE WITH THE "ALUMINUM STANDARDS AND DATA 2006 EDITION".

8. ALL FASTENERS SHALL BE CORROSION RESISTANT AS SPECIFIED IN THE INTERNATIONAL RESIDENTIAL CODE (IRC) AND THE INTERNATIONAL BUILDING CODE (IBC).

9. ANCHORS TO WALL SHALL BE AS FOLLOWS:
   -TO EXISTING WOOD FRAMING: SOUTHERN YELLOW PINE NO. 2, G=0.55
      *(2) ¼"x4" TIMBERLOK HEAVY DUTY WOOD SCREWS MANUFACTURED BY FASTENMASTER
      *MINIMUM 2" THREADED PENETRATION INTO WOOD
      *IN CASE THE WALL HAS SIDING PANELS ON THE EXTERIOR, THE ANCHOR MUST BE LONG ENOUGH TO REACH THE MAIN BUILDING WOOD STRUCTURE.
      *ANCHORS SHALL BE INSTALLED PER MANUFACTURER'S RECOMMENDATIONS AND SPECIFICATIONS.

10. IT SHALL BE THE RESPONSIBILITY OF THE CONTRACTOR TO VERIFY THE SOUNDNESS OF THE STRUCTURE WHERE THE SHUTTER IS TO BE ATTACHED TO INSURE PROPER ANCHORAGE. THIS SHUTTER SHALL ONLY BE ATTACHED TO WOOD FRAMING BUILDINGS.

11. EACH SHUTTER SHALL HAVE A LEGIBLE AND READILY VISIBLE MARKING INSTRUCTING THE BUILDING OWNER OR TENANT TO SECURE THE SHUTTER WITH STORM BARS AND COMPONENTS DURING PERIODS OF HURRICANE WARNINGS.

12. THE BUILDING OWNER OR TENANT IS RESPONSIBLE FOR SECURING THE SHUTTER WITH STORM BARS AND COMPONENTS DURING PERIODS OF HURRICANE WARNINGS.

13. THE INSTALLATION CONTRACTOR IS TO SEAL/CAULK AROUND ALL SHUTTER COMPONENTS IN CONTINUOUS CONTACT WITH BUILDING EXTERIOR TO PREVENT WIND/RAIN INTRUSION.

14. THE SHUTTER SHALL COMPLY WITH ALL SPECIFICATIONS INDICATED IN THIS DRAWING AND ANY BUILDING AND ZONING REGULATIONS PROVIDED BY THE JURISDICTION WHERE PERMIT IS APPLIED.

15. THIS PRODUCT EVALUATION DOCUMENT WILL BE CONSIDERED INVALID IF ALTERED BY ANY MEANS.

16. SHUTTER MUST HAVE A MINIMUM SEPERATION FROM GLASS OF 3".

STATE OF TEXAS
BRANDON T. JASEK
95727
LICENSED
PROFESSIONAL ENGINEER

10-19-12

Force Engineering & Testing, Inc.
State of Texas
Reg. # F-4611

REV	BY	DATE	DESCRIPTION

DRAWN BY: CVE
DATE DRAWN: 12-18-09
CHECKED BY: BJ
DATE CHECKED: 12-18-09
APPROVED BY:
DATE APPROVED:
SCALE: VARIES

Force Engineering & Testing Inc.
19530 Ramblewood Drive Humble, TX. 77338
(281) 548-6883 Fax (281) 548-6888

PROJECT: BRICKHOUSE LOW PROFILE COLONIAL SHUTTER SYSTEM
LOCATION: HOUSTON, TEXAS
CONTRACTOR:
ARCHITECT:

JOB NO: 368-0446T-09
DRAWING NO: G-1
REV NO:
SHEET 1 OF 4

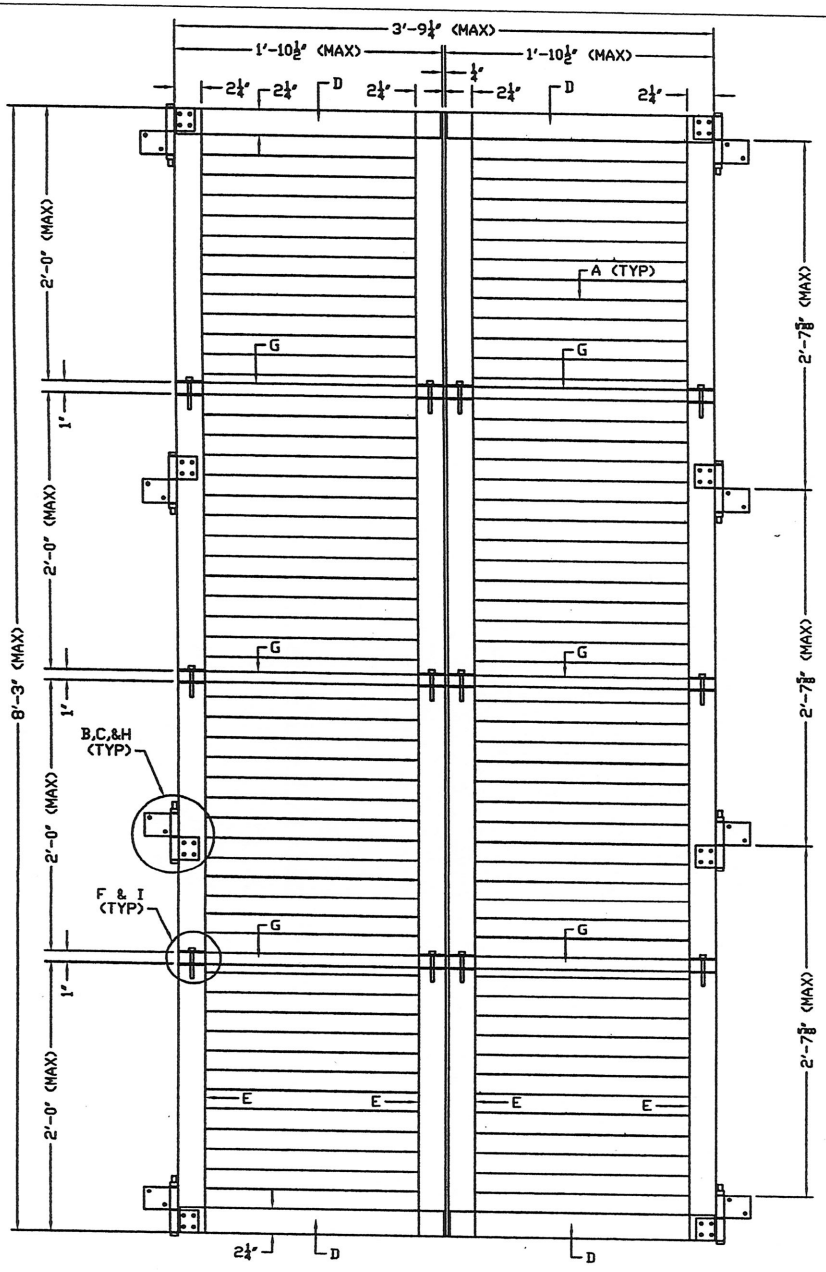

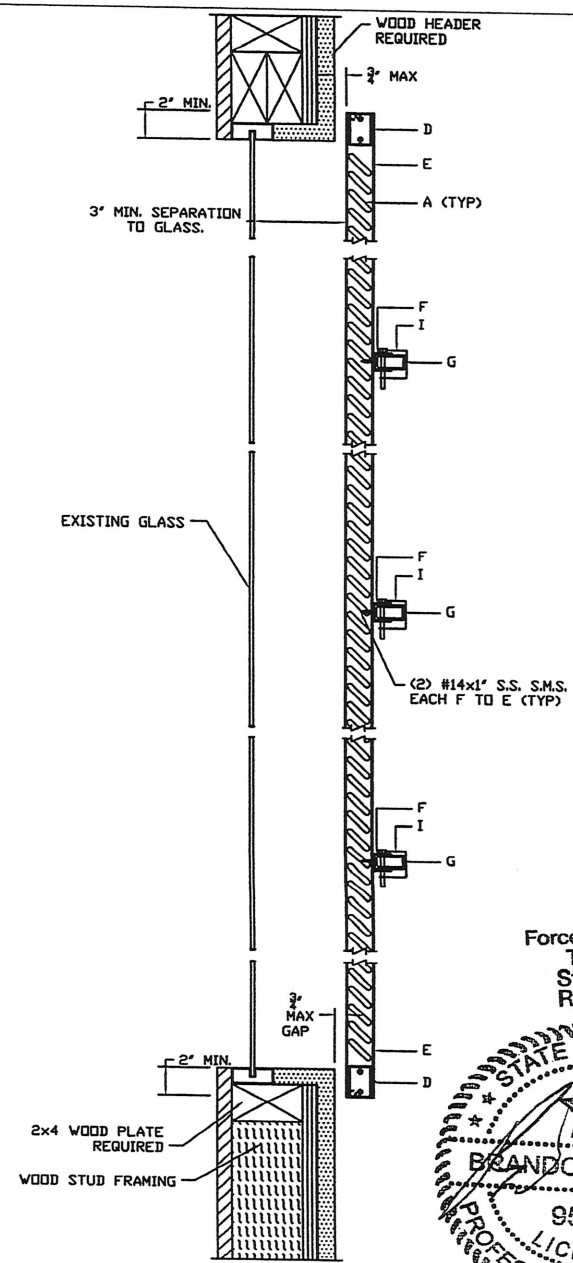

Force Engineering & Testing, Inc.
State of Texas
Reg. # F-4611

STATE OF TEXAS
BRANDON T. JASEK
95727
LICENSED
PROFESSIONAL ENGINEER

10-19-12

REV	BY	DATE	DESCRIPTION

DRAWN BY: CVE
DATE DRAWN: 12-18-09
CHECKED BY: BJ
DATE CHECKED: 12-18-09
APPROVED BY:
DATE APPROVED:
SCALE:

Force Engineering & Testing Inc.
19530 Ramblewood Drive Humble, TX 77338
(281) 548-8883 Fax (281) 548-8888

BROOKHOUSE LOW PROFILE COLONIAL SHUTTER SYSTEM
LOCATION: HOUSTON, TEXAS
CONTRACTOR:
ARCHITECT:

JOB NO: 368-0446T-09
DRAWING NO: E-1
REV NO:
SHEET 2 OF

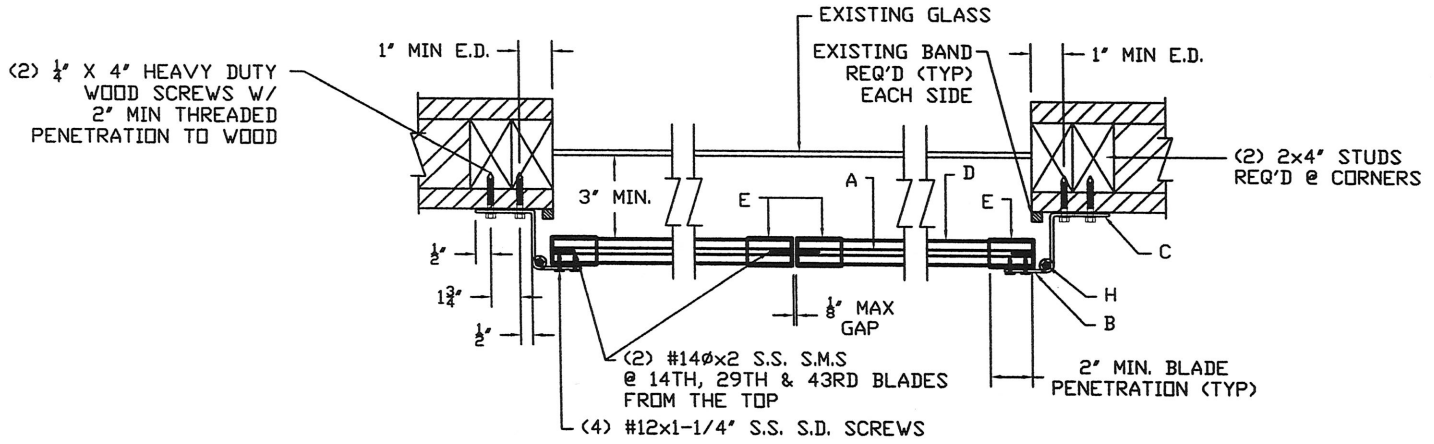

HURRICANE POSITION (STORM BARS AT 24" O.C.)

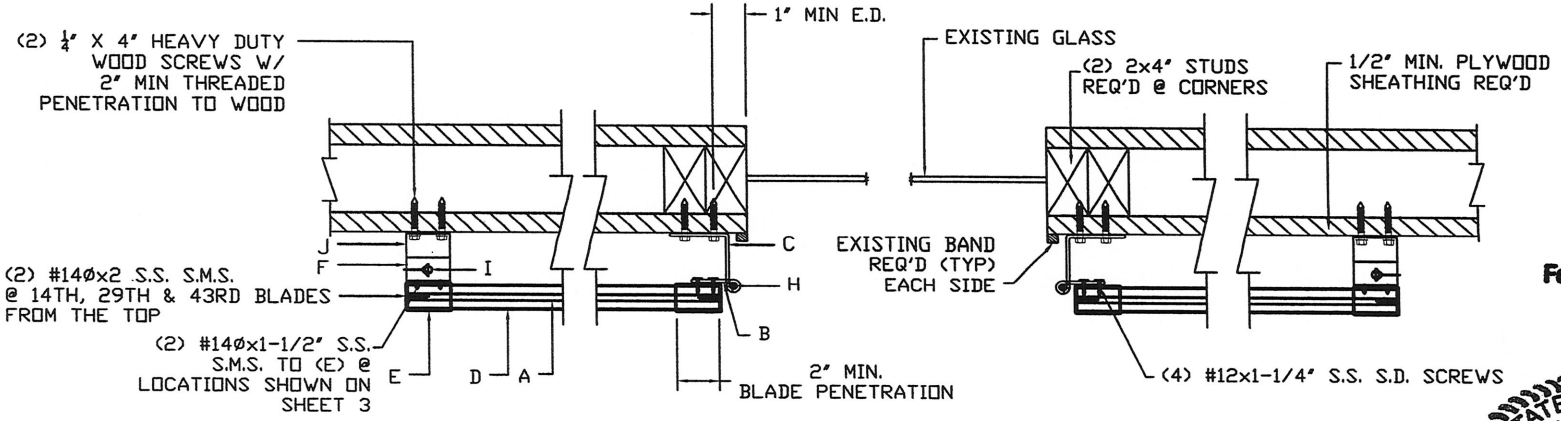

NON-HURRICANE POSITION

Force Engineering & Testing, Inc.
State of Texas
Reg. # F-4611

STATE OF TEXAS
BRANDON T. JASEK
95727
LICENSED
PROFESSIONAL ENGINEER

10-14-12

REV	BY	DATE	DESCRIPTION

DRAWN BY: CVE
DATE DRAWN: 12-18-09
CHECKED BY: BJ
DATE CHECKED: 12-18-09
APPROVED BY:
DATE APPROVED:

Force Engineering & Testing, Inc.
19530 Rensselaer Drive Houston, TX 77339

PROJECT: BROKHOUSE LOW PROFILE COLONIAL SHUTTER SYSTEM
LOCATION: HOUSTON, TEXAS
CONTRACTOR:
JOB NO: 368-0446T-09
DRAWING NO: S-1
REV NO:
SHEET 3 OF

SHUTTER COMPONENTS

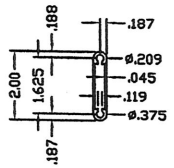

(A) LOUVER BLADE
6063-T6 ALUM. ALLOY

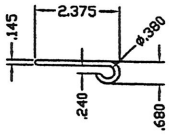

(B) FLAT HINGE, 2" LONG
6063-T5 ALUM. ALLOY

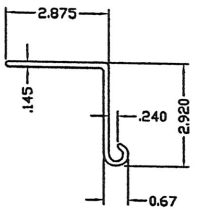

(C) DOUBLE HINGE, 2" LONG
6063-T5 ALUM. ALLOY

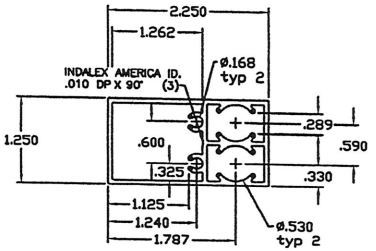

(D) TOP & BOTTOM RAIL
6063-T6 ALUM. ALLOY

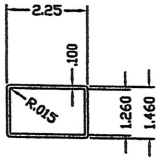

(E) JAMB
6063-T6 ALUM. ALLOY

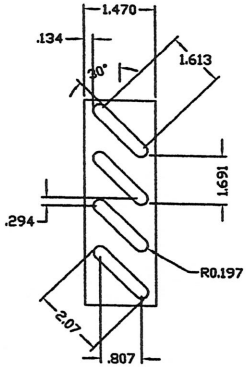

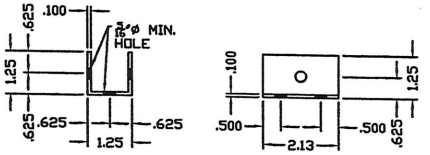

(F) H.V. STORM BAR CLIP
6063-T6 ALUM. ALLOY

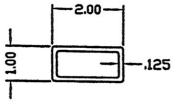

(G) STORM BAR
6063-T5 ALUM. ALLOY

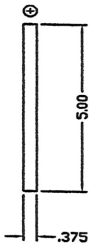

(H) S.S. HINGE PIN
W/ LOCK NUT

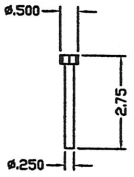

(I) S.S. H.V. SAFETY PEN
W/ 2 S.S. WIRE SNAP

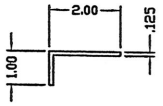

(J) NON-HURRICANE BRACKET ANGLE
6063-T6 ALUM. ALLOY

Force Engineering & Testing, Inc.
State of Texas
Reg. # F-4611

10-19-12

DESCRIPTION	DATE	BY	REV

DRAWN BY: CVE
DATE DRAWN: 12-18-09
CHECKED BY: BJ
DATE CHECKED: 12-18-09
APPROVED BY:
DATE APPROVED:
SCALE:

Force Engineering & Testing, Inc.
16535 Diana Lane Houston, TX 77058
(281) 486-4888 Fax (281) 486-4889

PROJECT: BROOKHOUSE LOW PROFILE COLONIAL SHUTTER SYSTEM
LOCATION: HOUSTON, TEXAS
CONTRACTOR:
ARCHITECT:
JOB NO.: 368-0446T-09
DRAWING NO.: C-1
REV NO.:
SHEET 4 OF