GENERAL NOTES:

1. BERTHA H.V. ACCORDION SHUTTER SYSTEM WITH H.V. BLADE #3 W/ OR W/O H.V. WINDOW BLADE #3 SHOWN ON THIS PRODUCT EVALUATION DOCUMENT (P.E.D.) HAS BEEN VERIFIED FOR COMPLIANCE IN ACCORDANCE WITH THE 2006 EDITIONS OF THE INTERNATIONAL BUILDING CODE, (I.B.C.) AND INTERNATIONAL RESIDENTIAL CODE, (I.R.C.) WITH THE 2006 TEXAS REVISIONS, EFFECTIVE JANUARY 1, 2008.
THIS PRODUCT'S SHALL BE INSTALLED AT SEAWARD AND INLAND AREAS, AS DEFINED BY THE TEXAS DEPARTMENT OF INSURANCE. DESIGN WIND LOADS SHALL BE DETERMINED AS PER SECTION 1609 OF THE OF THE INTERNATIONAL BUILDING CODE, FOR A BASIC WIND SPEED AS REQUIRED BY THE JURISDICTION WHERE SHUTTER WILL BE INSTALLED, AND FOR A DIRECTIONALITY FACTOR Kd=0.85, IN ACCORDANCE W/ ASCE 7-05 STANDARD IN ORDER TO VERIFY THAT COMPONENTS AND ANCHORS ON THIS P.E.D. AS TESTED WERE NOT OVER STRESSED, A 33% INCREASE IN ALLOWABLE STRESS FOR WIND LOADS WAS NOT USED IN THEIR ANALYSIS. FASTENERS SPACING TO WOOD HAS BEEN DETERMINED IN ACCORDANCE WITH N.D.S. 2005.

   BERTHA H.V. ACCORDION SHUTTER SYSTEM WITH H.V. BLADE #3 W/ OR W/O H.V. WINDOW BLADE #3 ADEQUACY FOR IMPACT AND WIND RESISTANCE HAS BEEN VERIFIED IN ACCORDANCE WITH SECTIONS 1609.1.2 AND R301.1.3 OF THE INTERNATIONAL AND RESIDENTIAL BUILDING CODE, RESPECTIVELY, AS PER AMERICAN TEST LAB OF SOUTH FLORIDA REPORTS:

   - (1) H.V. BLADE #3 #0403.01-08 WITH ADDENDUMS #3 & #3A, DATED 4/30/14, AS PER PROTOCOLS TAS 201, 202 & 203 AND ASTM E-330, ASTM E-1886 AND E-1996 STANDARDS (MISSILE LEVEL D, WIND ZONES 1,2,3&4), 0825.01-10 (WITH ADDENDUM #2, DATED 4/30/14), 1220.01-10, 1209.01-10 & 0422.02-14, AS PER PROTOCOLS TAS-201, TAS 202 & TAS-203, LARGE MISSILE.
   - (1) H.V. BLADE #3 WORKING IN UNISON WITH (1A) H.V. WINDOW BLADE #3 #0829.01-08 WITH ADDENDUM #2, DATED 4/30/14, AS PER PROTOCOLS TAS-201, TAS 202 & TAS-203 AND ASTM E-330, ASTM E-1886 AND E-1996 STANDARDS (MISSILE LEVEL D, WIND ZONES 1, 2, 3 & 4).
   - (1) H.V. BLADE #3 AND (1A) H.V. WINDOW BLADE #3 ARE ENGINEERED TO WORK IN UNISON WITH EACH OTHER UNDER THE GENERAL LIMITATIONS AND CONDITIONS OF USE INDICATED ON SHEET 18.

2. BERTHA ACCORDION PINS (33), (34), (35) OR ALTERNATE (36), SHALL BE AS INDICATED ON SHEETS 3 & 4, USED AT BLADE'S KNUCKLE . ACCORDION PINS (32), USED AT HV DIRECT MOUNT SHALL BE AS INDICATED ON SHEET 3. PINS SHALL BE 410-HT MINIMUM SERIES STAINLESS STEEL SCREWS WITH 173.6 KSI YIELD STRENGTH AND 187.4 KSI TENSILE STRENGTH. PINS SHALL BE COATED WITH BERTHA HV DACROSHIELD COATING SYSTEM AS MANUFACTURED BY APPROVED COATING APPLICATORS, REGISTERED WITH AMERICAN SHUTTER SYSTEMS ASSOCIATION.

3. ALL ALUMINUM EXTRUSIONS SHALL BE ALUMINUM ASSOCIATION 6063-T6 ALLOY AND TEMPER, WITH Fy = 27.1 ksi MINIMUM (UNLESS OTHERWISE NOTED).

4. ALL SCREWS & BOLTS INSTALLED AT SEAWARD AREAS TO BE STAINLESS STEEL 304 OR 316 AISI SERIES AND MEET ASTM A167, OR HOT DIPPED GALVANIZED (AFTER FABRICATION) CARBON STEEL AS PER ASTM A123 OR ASTM A153, OR HOT DIPPED GALVANIZED OR GALVANNEALED (PRIOR TO FABRICATION) AND MEET ASTM A653 WITH 50 KSI YIELD STRENGTH AND 90 KSI TENSILE STRENGTH, PER 2006 TEXAS REVISIONS TO SECTION 1716.1.1 OF THE 2006 I.B.C. AND SECTION R325.1.1 OF THE 2006 I.R.C.

5. ALL SCREWS & BOLTS INSTALLED AT INLAND I AREAS TO BE STAINLESS STEEL 304 OR 316 AISI SERIES AND MEET ASTM A167, OR HOT DIPPED GALVANIZED (AFTER FABRICATION) CARBON STEEL AS PER ASTM A123 OR ASTM A153, OR HOT DIPPED GALVANIZED OR GALVANNEALED (PRIOR TO FABRICATION) AND MEET ASTM A653; HOT DIP GALVANIZED OR ELECTRO GALVANIZED PER ASTM A641, MECHANICALLY DEPOSITED ZINC COATINGS PER ASTM B695 OR ELECTRO DEPOSITED ZINC COATINGS PER ASTM B633, PER THE 2006 TEXAS REVISIONS TO SECTION 1716.1.2 OF THE 2006 I.B.C. AND TO SECTION R325.1.2 OF THE 2006 I.R.C.

6. SEE SHEETS 6 & 8 FOR ANCHORS SPECIFICATIONS ON DIFFERENT SUBSTRATES.

7. THIS BERTHA H.V. ACCORDION SHUTTER SYSTEM BEARS A U.S. PATENT #6779582. COMPONENTS OF THIS APPROVAL ARE COVERED, IN WHOLE OR IN PART BY U.S. PATENT #5458179 ISSUED TO EASTERN METAL SUPPLY, INC.

8. IT SHALL BE THE RESPONSIBILITY OF THE CONTRACTOR TO VERIFY THE SOUNDNESS OF THE STRUCTURE WHERE SHUTTER IS TO BE ATTACHED TO INSURE PROPER ANCHORAGE. CONTRACTOR TO SEAL/CAULK ALL SHUTTER COMPONENT EDGES WHICH REMAIN, THRU FASTENING IN CONTINUOUS CONTACT WITH THE BUILDING TO PREVENT WIND/RAIN INTRUSION.

9. EACH UNIT MUST BEAR PERMANENT LABEL IN A VISIBLE PLACE WITH WARNING NOTE: DURING PERIODS OF HURRICANE WARNINGS HOME OWNER, TENANT, OR OTHERS, MUST PROPERLY CLOSE ALL CENTERMATES AND ENGAGE OR LOCK ALL LOCKS.

10. BERTHA H.V. ACCORDION SHUTTER SYSTEM WITH H.V. BLADE #3 W/ OR W/O H.V. WINDOW BLADE #3 INSTALLATION SHALL COMPLY WITH SPECS INDICATED IN THIS DRAWING PLUS ANY BUILDING AND ZONING REGULATIONS PROVIDED BY THE JURISDICTION WHERE PERMIT IS APPLIED TO.

11. THE INSTALLATION CONTRACTOR IS TO SEAL/CAULK ALL SHUTTER COMPONENT EDGES WHICH REMAIN IN CONTINUOUS CONTACT WITH THE BUILDING TO PREVENT WIND/RAIN INTRUSION. CAULK AND SEAL SHUTTER TRACKS ALL AROUND FULL LENGTH.

12. (a) THIS P.E.D. PREPARED BY THIS ENGINEER IS GENERIC AND DOES NOT PROVIDE INFORMATION FOR A SITE SPECIFIC PROJECT; i.e. WHERE THE SITE CONDITIONS DEVIATE FROM THE P.E.D.

    (b) CONTRACTOR TO BE RESPONSIBLE FOR THE SELECTION, PURCHASE AND INSTALLATION INCLUDING LIFE SAFETY OF THIS PRODUCT, BASED ON THIS P.E.D., PROVIDED HE/SHE DOES NOT DEVIATE FROM THE CONDITIONS DETAILED ON THIS DOCUMENT. CONSTRUCTION SAFETY AT SITE IS THE CONTRACTOR'S RESPONSIBILITY.

    (c) THIS P.E.D. WILL BE CONSIDERED INVALID IF ALTERED BY ANY MEANS.

    (d) SITE SPECIFIC PROJECTS SHALL BE PREPARED BY A PROFESSIONAL REGISTERED ENGINEER OR ARCHITECT WHICH WILL BECOME THE ENGINEER OF RECORD (E.O.R.) FOR THE PROJECT AND WHO WILL BE RESPONSIBLE FOR THE PROPER USE OF THE P.E.D. ENGINEER OF RECORD, ACTING AS A DELEGATED ENGINEER TO THE P.E.D. ENGINEER SHALL SUBMIT TO THIS LATTER THE SITE SPECIFIC DRAWINGS FOR REVIEW.

    (e) THIS P.E.D. SHALL BEAR THE DATE AND ORIGINAL SEAL AND SIGNATURE OF THE PROFESSIONAL ENGINEER OF RECORD THAT PREPARED IT.

13. SHUTTER MANUFACTURER'S LABEL SHALL BE LOCATED ON A READILY VISIBLE LOCATION AT ACCORDION SHUTTER. ONE LABEL SHALL BE PLACED FOR EVERY OPENING. LABELING SHALL INDICATE MANUFACTURER'S NAME, PRODUCT NAME, ASTM E-330, E-1886, E-1996 & FLORIDA BUILDING CODE HIGH VELOCITY HURRICANE ZONE TAS 201, TAS 202 & TAS 203, COMPLIANT.

TABLE OF CONTENTS

AREA 1: HV BLADES (1) & (1A)

GENERAL NOTES.		SHEET 1
SYSTEM COMPONENTS.	1-21	SHEET 2
SYSTEM COMPONENTS.	22-36	SHEET 3
TYPICAL SHUTTER ASSEMBLY.		SHEET 3A

AREA 2: HV BLADE (1) AND HV WINDOW BLADE (1A) (WHERE APPLICABLE)

TYPICAL SHUTTER ELEVATION & NOTES ON LOCKS.	SHEET 4
MAXIMUM SPAN TABLES.	SHEET 5
ANCHOR SCHEDULE- CONCRETE	SHEET 6
ANCHOR SCHEDULE- CONCRETE & BLOCK.	SHEET 7
ANCHOR SCHEDULE- WOOD	SHEET 8
INSTALLATION DETAILS 1-6 -CONCRETE & BLOCK	SHEET 9
INSTALLATION DETAILS 7-9 -CONCRETE & BLOCK	SHEET 10
INSTALLATION DETAILS 10 -METAL STUD	SHEET 10A
INST. DETAILS W/ HV CENTERMATES (13) & (14)	SHEET 11
INST. DETAILS W/ HV "T" LOCK CENTERMATES (18) & (19)	SHEET 12
INST. DETAILS W/ HD CENTERMATES (22), (23) & (24)	SHEET 12
END CONNECTION DETAILS 1-6-CONCRETE & BLOCK	SHEET 13
INSTALLATION DETAILS 1W-6W -WOOD	SHEET 14
INSTALLATION DETAILS 7W-10W -WOOD	SHEET 15
END CONNECTION DETAILS 1-6-WOOD	SHEET 16

AREA 3: HV WINDOW BLADE (1A) ONLY

TYPICAL WINDOW BLADE & WINDOW DETAIL	SHEET 17
TYPICAL SHUTTER ELEVATION	SHEET 18

SIGNED AND SEALED COPIES OF THIS DRAWING SHALL BE USED ONLY TO OBTAIN PERMITS IN THE STATE OF TEXAS

TEXAS DEPARTMENT OF INSURANCE - 2006

5/12/14

P.E. SEAL/SIGNATURE/DATE

WALTER A. TILLIT Jr. P.E.
PROFESSIONAL ENGINEER

6355 N.W. 36TH. ST., STE. 305
VIRGINIA GARDENS, FL. 33166
PHONE : (305) 871-1530 , FAX : (305) 871-1531

TEXAS LIC. # 90691
FIRM REGISTRATION # F-13790

A.S.S.A.
American Shutter Systems Association, Inc.
4268 Westroads Drive
West Palm Beach, FL 33407

© 2014 EASTERN METAL SUPPLY, INC.

BERTHA HV™
Accordion Shutter System
H.V. BLADE #3 W/ OR W/O H.V. WINDOW BLADE #3

REV. No	DESCRIPTION	DATE	DRAWN BY: A.G.
1	OLD 13-032	05/06/14	DATE: 04/02/13
2			DRAWING No
3			14-038
4			
5			SHEET
6			1 OF 18

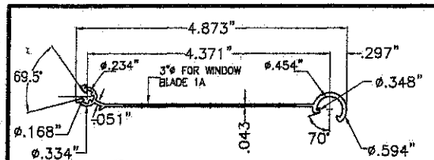

1 HV BLADE #3
HV WINDOW BLADE #3 *

* SEE LIMITATIONS OF USE FOR BLADE 1A ON SHEET 18

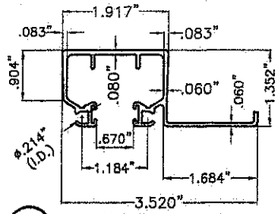

2 HV HEADER
QUALIFIED FOR USE W/ HV BLADES 1, 1A

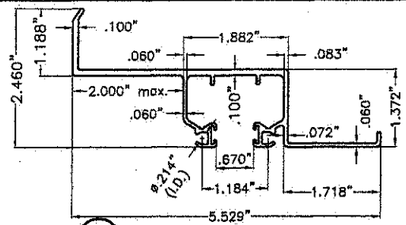

3 HV B.O. TRACK
QUALIFIED FOR USE W/ HV BLADES 1, 1A

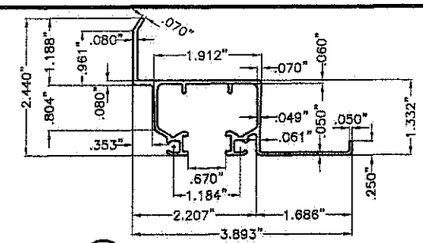

4 HV HEADER/SILL
QUALIFIED FOR USE W/ HV BLADES 1, 1A

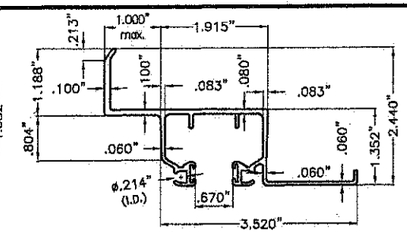

4A HV 1" B.O. HEADER/SILL
QUALIFIED FOR USE W/ HV BLADE 1

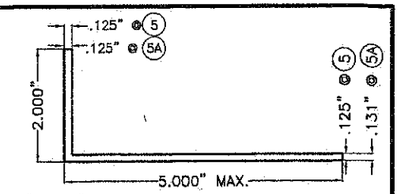

5, 5A ALUMINUM ANGLES
QUALIFIED FOR USE W/ HV BLADE 1

1A

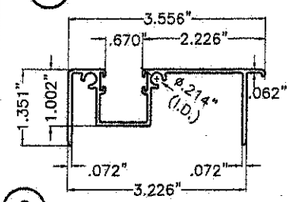

6 HV ADJ. FLOOR TRACK
QUALIFIED FOR USE W/ HV BLADES 1, 1A

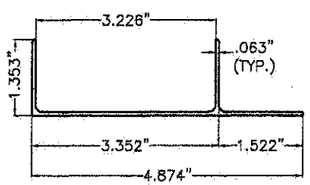

7 HV ADJ. ADAPTER W/ LIP
QUALIFIED FOR USE W/ HV BLADES 1, 1A

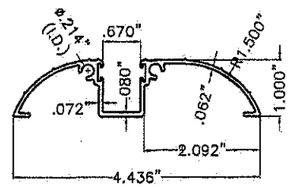

8 HV WALK-OVER TRACK
QUALIFIED FOR USE W/ HV BLADE 1

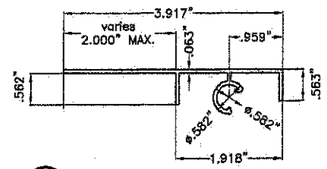

9 HV DIRECT MOUNT
QUALIFIED FOR USE W/ HV BLADES 1, 1A

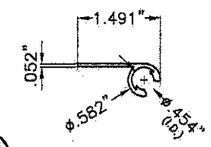

10 HV 90°/180° STARTER
QUALIFIED FOR USE W/ HV BLADES 1, 1A

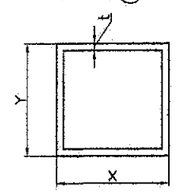

X	Y	t
2"	2"	0.125"
3"	3"	0.090"

11 CORNER POSTS
QUALIFIED FOR USE W/ HV BLADES 1, 1A

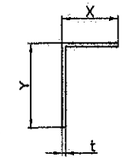

MIN. X	MIN. Y	MIN. t
1"	1"	0.062"

12 SIDE ANGLES
QUALIFIED FOR USE W/ HV BLADES 1, 1A

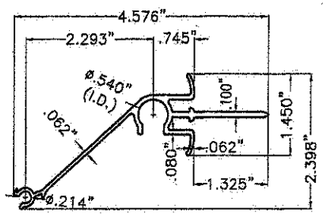

13 HV CENTERMATE
QUALIFIED FOR USE W/ HV BLADES 1, 1A

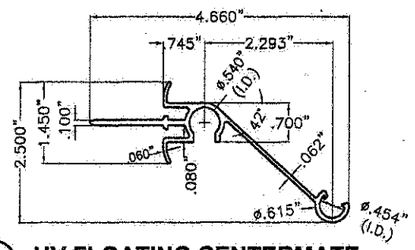

14 HV FLOATING CENTERMATE
QUALIFIED FOR USE W/ HV BLADES 1, 1A

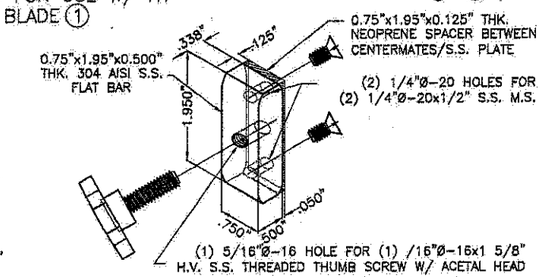

15 S.S. SALT WATER LOCK
QUALIFIED FOR USE W/ HV BLADE 1

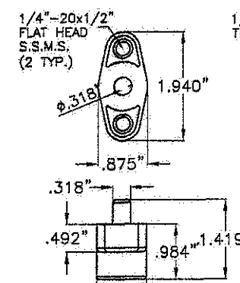

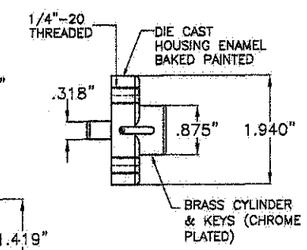

16 H.V. LOCK
QUALIFIED FOR USE W/ HV BLADES 1, 1A

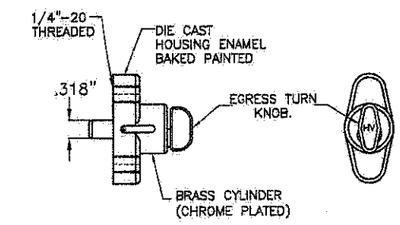

17 H.V. EGRESS LOCK
QUALIFIED FOR USE W/ HV BLADES 1, 1A

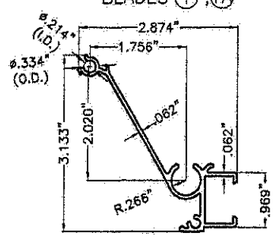

18 HV MALE "T" LOCK CENTERMATE
QUALIFIED FOR USE W/ HV BLADE 1

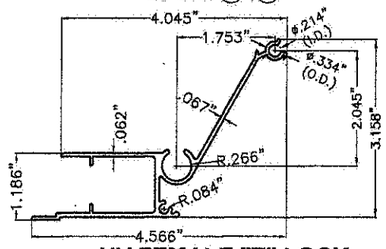

19 HV FEMALE "T" LOCK CENTERMATE
QUALIFIED FOR USE W/ HV BLADE 1

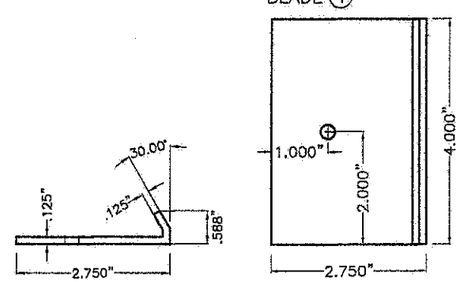

20 "J" CLIP FOR "T" LOCK CENTERMATE
QUALIFIED FOR USE W/ HV BLADE 1

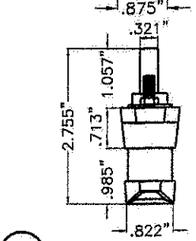

21 HV "T" LOCK
QUALIFIED FOR USE W/ HV BLADE 1

COMPONENTS
6063-T6 ALLOY AND TEMPER
SCALE 3/8"=1"

TEXAS DEPARTMENT OF INSURANCE – 2006

P.E. SEAL/SIGNATURE/DATE

WALTER A. TILLIT Jr. P.E.
PROFESSIONAL ENGINEER
6355 N.W. 36TH. ST., STE. 305
VIRGINIA GARDENS, FL 33166
PHONE : (305) 871-1530 , FAX : (305) 871-1531
TEXAS LIC. # 90691
FIRM REGISTRATION # F-13790

A.S.S.A.
American Shutter Systems Association, Inc.
4268 Westroads Drive
West Palm Beach, FL 33407

© 2014 EASTERN METAL SUPPLY, INC.

BERTHA HV™
Accordion Shutter System
H.V. BLADE #3 W/ OR W/O H.V. WINDOW BLADE #3

REV. No	DESCRIPTION	DATE	DRAWN BY: A.G.
1	OLD 13-032	05/06/14	DATE: 04/02/13
2			DRAWING No
3			14-038
4			
5			SHEET
6			2 OF 18

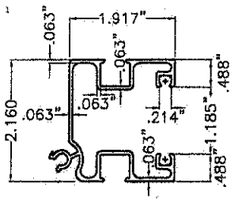

(22) HD CENTERMATE W/ LOCKING ROD

QUALIFIED FOR USE W/ HV BLADE (1)

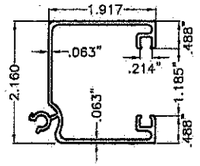

(23) HD CENTERMATE W/ NO LOCKING ROD

QUALIFIED FOR USE W/ HV BLADE (1)

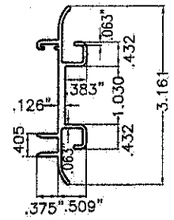

(24) HD CENTERMATE'S INSERT

QUALIFIED FOR USE W/ HV BLADE (1)

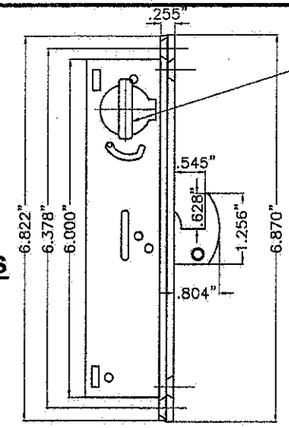

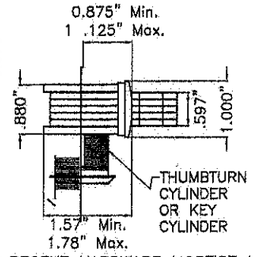

(25) HD LOCK

QUALIFIED FOR USE W/ HV BLADE (1)

BY REGENT HARDWARE MORTISE LOCKS SERIES 2333 HOOK BOLT LOCK.

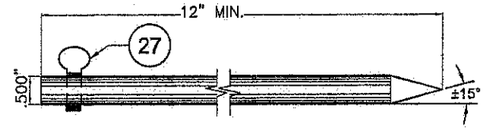

(26) 12" LOCKING ROD △

QUALIFIED FOR USE W/ HV BLADE (1)

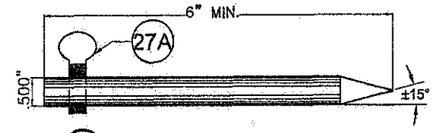

(26A) 6" LOCKING ROD △

QUALIFIED FOR USE W/ HV BLADE (1)

△ (26), (26A) INSTALLATION WILL REQUIRE A 7/16" HOLE DRILLED AT TRACKS FOR PROPER EMBEDMENT

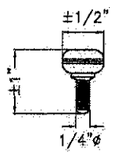

(27) HV 1/4" Ø-20 AISI 304 SERIES S.S. THUMBSCREWS

QUALIFIED FOR USE W/ HV BLADE (1)

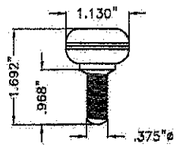

(27A) HV 3/8" Ø-16 ACETAL THUMBSCREWS

QUALIFIED FOR USE W/ HV BLADE (1)

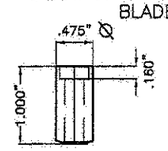

(28) HV LONG RECESSED NYLON BUSHING

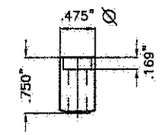

(29) HV SHORT RECESSED NYLON BUSHING

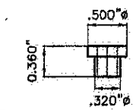

(30) HV NYLON HAT WASHER

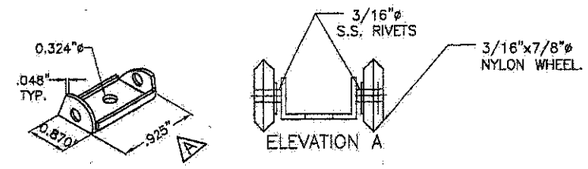

(31) HV WHEEL CARRIAGE

AISI 302-303 SERIES

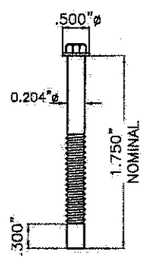

(32) HV DIRECT MOUNT PIN

#14-14x1 3/4" W/ #8 HD, W/ HV HD MARKING (SEE DETAIL X, SHEETS 13 & 16) W/ DACROSHIELD COATING

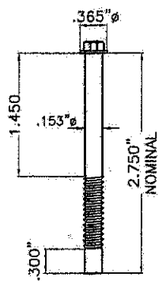

(33) HV PIN @ BLADE

#10-18"x2 3/4" W/ #8 HD, W/ HV HD MARKING W/ DACROSHIELD COATING

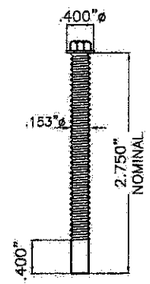

(34) HV PIN @ (31)

#10-18"x2 3/4" W/ #8 HD, W/ HV HD MARKING W/ DACROSHIELD COATING

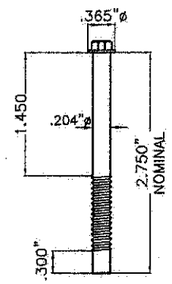

(35) HV PIN @ MALE KNUCKLE @ (13), (18), (19), (22), (23).

#14-14"x2 3/4" W/ #8 HD, W/ HV HD MARKING W/ DACROSHIELD COATING

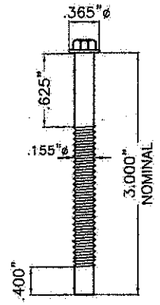

(36) ALTERNATE PIN @ BLADE & @ (31).

#10-18"x3" W/ #8 HD, W/ "4" HD MARKING W/ DACROSHIELD COATING

COMPONENTS (CONTINUED)

N.T.S

TEXAS DEPARTMENT OF INSURANCE – 2006

5/12/14

P.E. SEAL/SIGNATURE/DATE

WALTER A. TILLIT Jr. P.E.
PROFESSIONAL ENGINEER

6355 N.W. 36TH. ST., STE. 305
VIRGINIA GARDENS, FL. 33166
PHONE : (305) 871-1530 , FAX : (305) 871-1531

TEXAS LIC. # 90691
FIRM REGISTRATION # F-13790

A.S.S.A.
American Shutter Systems Association, Inc.
4268 Westroads Drive
West Palm Beach, FL 33407

© 2014 EASTERN METAL SUPPLY, INC.

BERTHA HV™
Accordion Shutter System
H.V. BLADE #3 W/ OR W/O H.V. WINDOW BLADE #3

REV. No	DESCRIPTION	DATE	DRAWN BY: A.G.
1	OLD 13-032	05/06/14	DATE: 04/02/13
2			DRAWING No
3			14-038
4			
5			SHEET
6			3 OF 18

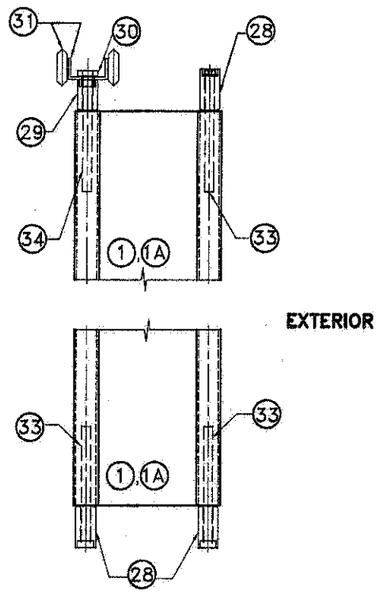

ASSEMBLY AT (31).
((31) GO EVERY OTHER INTERIOR KNUCKLE)

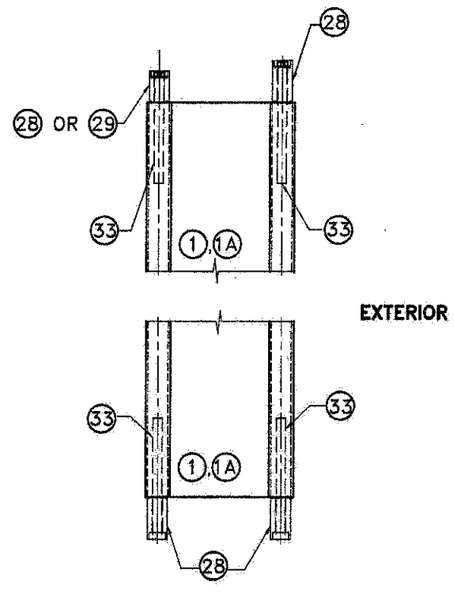

ASSEMBLY IN BETWEEN (31).

TYPICAL SHUTTER ASSEMBLY
WHEN $2\frac{3}{4}$" LONG NOMINAL PINS ARE USED *

SCALE: 1/4" = 1"

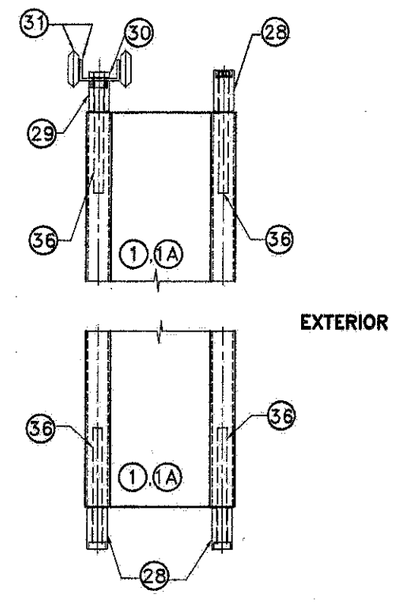

ASSEMBLY AT (31).
((31) GO EVERY OTHER INTERIOR KNUCKLE)

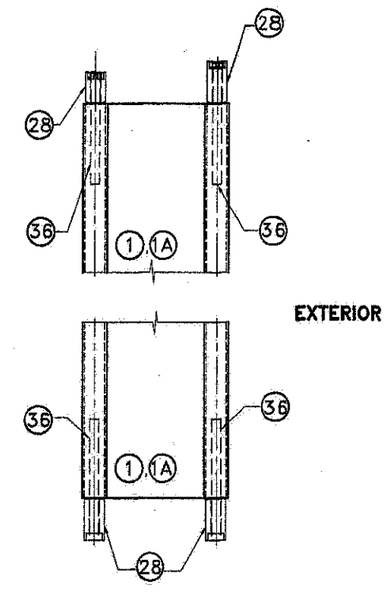

ASSEMBLY IN BETWEEN (31).

TYPICAL SHUTTER ASSEMBLY
WHEN 3" LONG NOMINAL PINS ARE USED

SCALE: 1/4" = 1"

* THE HV PINS & BUSHINGS ARE PRE-ASSEMBLED. TO KEEP BUSHINGS ON THE PIN A NOMINAL 0.275" O.D. x 0.130" I.D. x 0.072" THK. RUBBER RING IS PLACED OVER THE END OF THE SCREW, THE RING IS LEFT ON THE PIN WHEN INSTALLED INTO THE KNUCKLE'S SCREW BOSS.

TEXAS DEPARTMENT OF INSURANCE – 2006

5/12/14

P.E. SEAL/SIGNATURE/DATE

WALTER A. TILLIT Jr. P.E.
PROFESSIONAL ENGINEER

6355 N.W. 36TH. ST., STE. 305
VIRGINIA GARDENS, FL 33166
PHONE : (305) 871-1530 , FAX : (305) 871-1531

TEXAS LIC. # 90691
FIRM REGISTRATION # F-13790

A.S.S.A.
American Shutter Systems Association, Inc.
4268 Westroads Drive
West Palm Beach, FL 33407

© 2014 EASTERN METAL SUPPLY, INC.

BERTHA HV™
Accordion Shutter System
H.V. BLADE #3 W/ OR W/O H.V. WINDOW BLADE #3

REV. No	DESCRIPTION	DATE	DRAWN BY: A.G.
1	OLD 13-032	05/06/14	DATE: 04/02/13
2			DRAWING No
3			14-038
4			
5			SHEET
6			3A OF 18

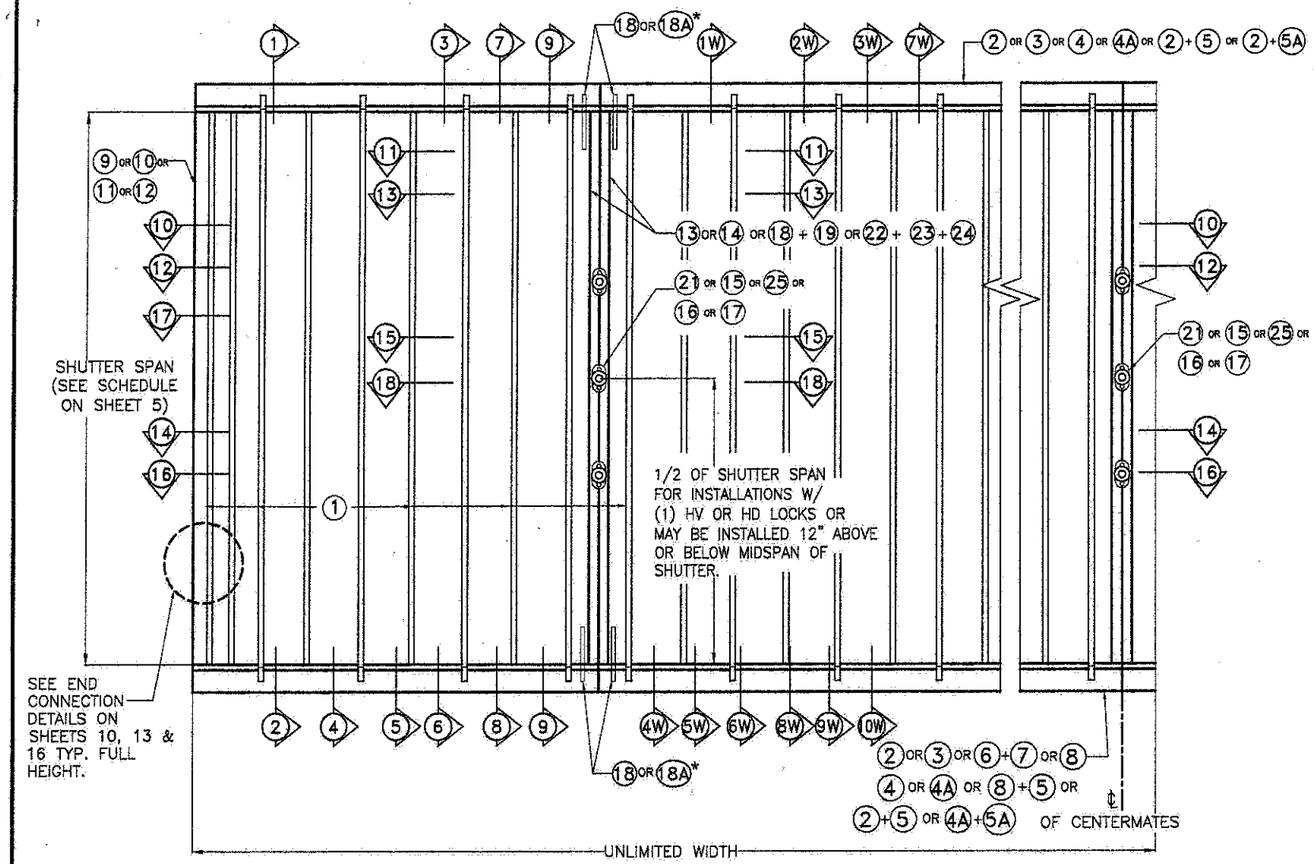

TYPICAL (1) H.V. BLADE #3 SHUTTER ELEVATION

N.T.S.

SEE LIMITATIONS OF USE FOR BLADE (1A) ON SHEET 18.

NOTES ON HV, HV "T" AND HD LOCKS AND CENTERMATES: VALID ONLY FOR INSTALLATIONS W/ HV (1) BLADE

* APPLICATION W/ HV LOCKS AND CENTERMATES:

1. **MANDATORY CONDITION #1:** ONE HV LOCK (15) or (16) or (17) SHALL BE USED AT 1/2 OF SHUTTER SPAN FOR ANY SPAN OR 12" ABOVE OR BELOW 1/2 OF SHUTTER SPAN FOR SPANS UP TO 156", AND FOR INSTALLATIONS AT ANY ELEVATION EXCEPT FOR INSTALLATIONS INTO METAL STUDS. HV LOCK (15) or (16) or (17) MAY BE USED AS AN INSIDE OR OUTSIDE LOCK, ATTACHED TO (13) or (14) CENTERMATES W/ (2) 1/4"–20 x 1/2" LONG FLAT HEAD S.S. M.S. LOCATION OF LOCK SHALL BE AS INDICATED ON TYPICAL SHUTTER ELEVATION. USE OF LOCKING RODS (26) W/ (27) AND (27A) IS COMPLETELY OPTIONAL.

2. **MANDATORY CONDITION #2 FOR INSTALLATIONS INTO METAL STUDS:** ONE HV LOCK (15) or (16) or (17) SHALL BE USED AT 1/2 OF SHUTTER SPAN FOR ANY SPAN OR 12" ABOVE OR BELOW 1/2 OF SHUTTER SPAN FOR SPANS UP TO **156"**, AND FOR INSTALLATIONS AT ANY ELEVATION EXCEPT FOR INSTALLATIONS INTO METAL STUD. HV LOCK (15) or (16) or (17) MAY BE USED AS AN INSIDE OR OUTSIDE LOCK, ATTACHED TO (13) or (14) CENTERMATES W/ (2) 1/4"–20 x 1/2" LONG FLAT HEAD S.S. M.S. LOCATION OF LOCK SHALL BE AS INDICATED ON TYPICAL SHUTTER ELEVATION. USE OF LOCKING RODS (26A) W/ (27) OR (27A) TOP AND BOTTOM IS COMPLETELY MANDATORY.

3. **MANDATORY CONDITION #3 FOR KEYSTONE MOUNTING INSTALLATIONS:** ONE HV LOCK 15 or 16 or 17 SHALL BE USED AT 1/2 OF SHUTTER SPAN FOR ANY SPAN OR 12" ABOVE OR BELOW 1/2 OF SHUTTER SPAN FOR SPANS UP TO **96"**, AND FOR INSTALLATIONS AT ANY ELEVATION. HV LOCK 15 or 16 or 17 MAY BE USED AS AN INSIDE OR OUTSIDE LOCK, ATTACHED TO 13 or 14 SYMMETRICAL CENTERMATES W/ (2) 1/4"–20 x 1/2" LONG FLAT HEAD S.S. M.S. LOCATION OF LOCK SHALL BE AS INDICATED ON TYPICAL SHUTTER ELEVATION. USE OF LOCKING RODS 26A W/ 27 OR 27A TOP AND BOTTOM IS COMPLETELY MANDATORY.

4. **OPTIONAL CONDITION #1:** IF DESIRED, FOR BETTER PERFORMANCE OR FOR SECURITY PURPOSES, UP TO TWO HV LOCKS (16), (17) OR (15) MAY BE USED AS AN INSIDE OR OUTSIDE LOCK. CONNECTION OF LOCKS TO CENTERMATES (13) OR (14) SHALL BE AS INDICATED ON NOTE (1) ABOVE.
LOCATION OF LOCKS SHALL BE AS INDICATED ON TYPICAL SHUTTER ELEVATION.

* APPLICATION W/ HV "T" LOCKS AND CENTERMATES:

1. **SECOND ALTERNATE TO MANDATORY CONDITION #1 VALID ONLY FOR HV "T" LOCK (21), AND CENTERMATES (18) AND (19):**
ONE ALTERNATE HV "T" LOCK (21) MAY BE INSTALLED IN LIEU OF OTHER LOCKS FOR ANY SPAN AND INSTALLATION AT ANY ELEVATION. ALTERNATE LOCK (21) MAY BE USED AS AN INSIDE OR OUTSIDE LOCK. ATTACHMENT OF LOCK (21) INCLUDES USING "J" CLIP (20), AS SHOWN ON SECTION 15, SHEET 12, WHICH MUST BE CONNECTED TO CENTERMATES (18) AND (19) W/ 1/4" ø–20x1" S.S.M.S. INTO A 1/4"ø x 5/8" RIVNUT. LOCK MAY BE INSTALLED AT MIDSPAN OR 12" MAXIMUM ABOVE AND BELOW MIDSPAN. USE OF TWO LOCKING RODS (26) or (26A) TOP AND BOTTOM IS MANDATORY.

* APPLICATION W/ HD LOCKS & CENTERMATES:

1. **THIRD ALTERNATE TO MANDATORY CONDITION # 1 VALID FOR HD LOCK (25) W/ (2) HD CENTERMATES (22) OR (23) OR (22) + (23) W/ (24):**
ONE ALTERNATE HD LOCK (25) MAYBE USED IN LIEU OF OTHER LOCKS FOR ANY SPAN AND INSTALLATIONS AT ANY ELEVATION. ALTERNATE HD LOCK (25) MAY BE USED AS AN INSIDE OR OUTSIDE LOCK. ATTACHMENT OF HD LOCK (25) TO (24) IS W/ (3) #8 x 3/8" F.H. S.S.M.S., AND INCLUDES REINFORCEMENT INSERT (24) AS SHOWN ON SECTION 18, SHEET 12. LOCK MAY BE INSTALLED AT MIDSPAN OR 12" MAXIMUM BELOW OR ABOVE MIDSPAN. USE OF LOCKING RODS (26) or (26A) IS COMPLETELY OPTIONAL.

TEXAS DEPARTMENT OF INSURANCE – 2006

5/12/14

P.E. SEAL/SIGNATURE/DATE

WALTER A. TILLIT Jr. P.E.
PROFESSIONAL ENGINEER
6355 N.W. 36TH. ST., STE. 305
VIRGINIA GARDENS, FL. 33166
PHONE : (305) 871–1530 , FAX : (305) 871–1531
TEXAS LIC. # 90691
FIRM REGISTRATION # F–13790

A.S.S.A.
American Shutter Systems Association, Inc.
4268 Westroads Drive
West Palm Beach, FL 33407

© 2014 EASTERN METAL SUPPLY, INC.

BERTHA HV™
Accordion Shutter System
H.V. BLADE #3 W/ OR W/O H.V. WINDOW BLADE #3

REV. No	DESCRIPTION	DATE	DRAWN BY: A.G.
1	OLD 13-032	05/06/14	DATE: 04/02/13
2			DRAWING No 14–038
3			
4			
5			SHEET 4 OF 18
6			

MAXIMUM SHUTTER SPAN "L+" OR "L−"* (ft.) FOR INSTALLATIONS W/ ① HV BLADE. Δ

MAXIMUM A.S.D. PRESSURE RATING (psf) (+ or -)	POURED CONCRETE, CONCRETE BLOCK AND WOOD INSTALLATIONS ♣						
	WALL MOUNTING		FLOOR / CEILING MOUNTING		MIN. SEPARATION TO GLASS		
						WIND ZONE 4	
	L^+ (FT)	L^- (FT)	L^+ (FT)	L^- (FT)	WIND ZONES 1, 2 & 3	KNUCKLE	LOCK/ CENTERMATE
35	12' - 7"	13' - 0"	12' - 7"	13' - 0"	1"	4 11/16"	5 1/2"
40	11' - 10"	12' - 3"	11' - 10"	12' - 3"	1"	4 11/16"	5 1/2"
45	11' - 9"	11' - 11"	11' - 9"	11' - 11"	1"	4 11/16"	5 1/2"
50	11' - 5"	11' - 6"	11' - 5"	11' - 6"	1"	4 11/16"	5 1/2"
55	11' - 4"	11' - 4"	11' - 4"	11' - 4"	1"	4 11/16"	5 1/2"
60	10' - 6"	10' - 6"	10' - 6"	10' - 6"	1"	4 11/16"	5 1/2"
65	8' - 8"	8' - 8"	8' - 8"	8' - 8"	1"	3 5/8"	5 1/8"
70	8' - 3"	8' - 3"	8' - 3"	8' - 3"	1"	3 5/8"	5 1/8"
75	7' - 9"	7' - 9"	7' - 9"	7' - 9"	1"	3 5/8"	5 1/8"
80	7' - 3"	7' - 3"	7' - 3"	7' - 3"	1"	3 5/8"	5 1/8"
85	6' - 10"	6' - 10"	6' - 10"	6' - 10"	1"	3 5/8"	5 1/8"
90	5' - 7"	5' - 7"	5' - 7"	5' - 7"	1"	3 5/8"	5 1/8"
95	5' - 6"	5' - 6"	5' - 6"	5' - 6"	1"	3 5/8"	5 1/8"
100	5' - 5"	5' - 5"	5' - 5"	5' - 5"	1"	3 5/8"	5 1/8"
105	5' - 3"	5' - 3"	5' - 3"	5' - 3"	1"	3 5/8"	5 1/8"
110	5' - 2"	5' - 2"	5' - 2"	5' - 2"	1"	3 5/8"	5 1/4"

† EXCEPT THAT MAXIMUM SHUTTER SPAN "L+" OR "L−" AND MAXIMUM A.S.D. DESIGN PRESSURE RATING FOR INSTALLATIONS INTO CONCRETE OR CONCRETE BLOCK SHALL BE LIMITED AS FOLLOWS:
1− CONNECTIONS TO KEYSTONE MOUNTING LIMITED TO +64,−72 p.s.f. AND 7'−6" SPAN, SEE SECTION 9 ON SHEET 10.

♣ EXCEPT THAT MAXIMUM SHUTTER SPAN "L+" OR "L−" AND MAXIMUM A.S.D. DESIGN PRESSURE RATING FOR INSTALLATIONS INTO WOOD SHALL BE LIMITED AS FOLLOWS:
1− CONNECTIONS TO PLYWOOD LIMITED TO ±62 p.s.f. AND 8'−11" SPAN, SEE SECTION 5W ON SHEET 14.
2− CONNECTIONS TO HOLLOW CEILING LIMITED TO ±62 p.s.f. AND 8'−0" SPAN, SEE SECTION 2W ON SHEET 14.

MAXIMUM SHUTTER SPAN "L+" OR "L−"* (ft.) FOR INSTALLATIONS W/ ① HV BLADE. Δ

MAXIMUM A.S.D. PRESSURE RATING (psf) (+ or -)	FOR METAL STUD IN INSTALLATIONS ■						
	WALL MOUNTING		FLOOR / CEILING MOUNTING		MIN. SEPARATION TO GLASS		
						WIND ZONE 4	
	L^+ (FT)	L^- (FT)	L^+ (FT)	L^- (FT)	WIND ZONES 1, 2 & 3	KNUCKLE	LOCK/ CENTERMATE
64	7' - 0"	7' - 0"	-	-	1"	3 7/16"	5 1/8"
72	6' - 7"	6' - 7"	-	-	1"	3 7/16"	5 1/8"

■ SEE SECTION ⑩ ON SHEET 10A.

MAXIMUM SHUTTER SPAN "L+" OR "L−"* (ft.) FOR INSTALLATIONS W/ ① & ⑩ ◆HV BLADES. Δ

MAXIMUM A.S.D. PRESSURE RATING (psf) (+ or -)	POURED CONCRETE, CONCRETE BLOCK AND WOOD INSTALLATIONS						
	WALL MOUNTING		FLOOR / CEILING MOUNTING		MIN. SEPARATION TO GLASS		
						WIND ZONE 4	
	L^+ (FT)	L^- (FT)	L^+ (FT)	L^- (FT)	WIND ZONES 1, 2 & 3	KNUCKLE	LOCK/ CENTERMATE
55	9' - 6"	9' - 6"	9' - 6"	9' - 6"	1"	4 3/8"	4 1/4"
62	8' - 11"	8' - 11"	8' - 11"	8' - 11"	1"	4 3/8"	4 1/4"

◆ SEE LIMITATIONS OF USE FOR BLADE ⑩ ON SHEET 18.

* NOTES:

(1) L+: MAXIMUM ALLOWABLE SPAN FOR A GIVEN POSITIVE A.S.D. DESIGN PRESSURE RATING.
L−: MAXIMUM ALLOWABLE SPAN FOR A GIVEN NEGATIVE A.S.D. DESIGN PRESSURE RATING.

(2) PROCEDURE TO DETERMINE MAXIMUM SPAN FOR WALL MOUNTINGS (TOP/BOTTOM) OR FLOOR/CEILING:

GIVEN A POSITIVE A.S.D. DESIGN PRESSURE RATING, DETERMINE MAXIMUM SPAN "L+" FROM SCHEDULES.
GIVEN A NEGATIVE A.S.D. DESIGN PRESSURE RATING, DETERMINE MAXIMUM SPAN "L−" FROM SCHEDULES.

FINAL MAXIMUM ALLOWABLE SPAN IS EQUAL TO THE MINIMUM DETERMINED SPAN BETWEEN "L+" AND "L−".

(3) PROCEDURE TO DETERMINE MAXIMUM SPAN FOR COMBINATIONS IN BETWEEN WALL MOUNTINGS W/ FLOOR/CEILING MOUNTINGS:

FOR A GIVEN POSITIVE A.S.D. DESIGN PRESSURE RATING:
DETERMINE:
L_{1+}= MAX. SPAN FOR WALL MOUNTING INSTALLATIONS.
L_{2+}= MAX. SPAN FOR FLOOR/CEILING MOUNTING INSTALLATIONS.

FOR A GIVEN NEGATIVE A.S.D. DESIGN PRESSURE RATING:
DETERMINE:
L_{1-}= MAX. SPAN FOR WALL MOUNTING INSTALLATIONS.
L_{2-}= MAX. SPAN FOR FLOOR/CEILING MOUNTING INSTALLATIONS.

FINAL MAXIMUM ALLOWABLE SPAN IS EQUAL TO THE MINIMUM BETWEEN "L_{1+}", "L_{2+}", "L_{1-}" AND "L_{2-}"

(4) GO TO ANCHOR SCHEDULE ON SHEETS 6 & 7 FOR CONCRETE AND BLOCK, SHEET 8 FOR WOOD AND TO SECTION ON SHEET 10 FOR KEYSTONE MOUNTINGS AND SHEET 10A FOR METAL STUDS WITH FINAL MAXIMUM ALLOWABLE SPAN AND NEGATIVE DESIGN LOAD TO DETERMINE MAXIMUM ANCHOR SPACING.

(5) MINIMUM SEPARATION TO GLASS SHALL BE THE GREATEST MEASURED FROM EITHER REAR OF KNUCKLES OR REAR OF LOCKS/CENTERMATES (AS APPLICABLE) TO GLASS.

Δ INSTALLATION LEGEND APPLICABLE FOR ① HV AND ⑩ HV BLADES

SUBSTRATES / MOUNTINGS	CONCRETE & MASONRY	METAL STUD	WOOD
WALL	1, 2, 3, 4, 5 & 9	10	1W, 3W, 4W 7W, 9W & 10W
FLOOR/CEILING	6, 7 & 8	---	2W, 3W, 6W & 8W

TEXAS DEPARTMENT OF INSURANCE − 2006

STATE OF TEXAS
5/12/14

P.E. SEAL/SIGNATURE/DATE

WALTER A. TILLIT Jr. P.E.
PROFESSIONAL ENGINEER
6355 N.W. 36TH. ST., STE. 305
VIRGINIA GARDENS, FL. 33166
PHONE : (305) 871−1530 , FAX : (305) 871−1531
TEXAS LIC. # 90691
FIRM REGISTRATION # F−13790

A.S.S.A.
American Shutter Systems Association, Inc.
4268 Westroads Drive
West Palm Beach, FL 33407

© 2014 EASTERN METAL SUPPLY, INC.

BERTHA HV™
Accordion Shutter System
H.V. BLADE #3 W/ OR W/O H.V. WINDOW BLADE #3

REV. No	DESCRIPTION	DATE	DRAWN BY: A.G.
1	OLD 13−032	05/06/14	DATE: 04/02/13
2			DRAWING No
3			14−038
4			
5			SHEET
6			5 OF 18

MAXIMUM ANCHOR * SPACING (in.) SCHEDULE FOR A GIVEN MAX. SHUTTER SPAN, A.S.D. DESIGN NEGATIVE PRESSURE RATING AND A CORRESPONDING MOUNTING TYPE FOR CONCRETE OR CONCRETE BLOCK INSTALLATIONS

(SEE MOUNTINGS 1, 2, 3, 4 & 5 ON SHEET 9)

POURED CONCRETE

MAXIMUM SPAN (ft)	① & ② WALL MOUNTINGS W/ ③, ④ OR ④A — A.S.D. DESIGN NEGATIVE LOAD (psf)									③ & ④ WALL MOUNTING W/ ② + ⑤ — A.S.D. DESIGN NEGATIVE LOAD (psf)									⑤ WALL SILL MOUNTING W/ ⑧ + ⑤ — A.S.D DESIGN NEGATIVE LOAD (psf)								
	30	40	50	60	70	80	90	100	110	30	40	50	60	70	80	90	100	110	30	40	50	60	70	80	90	100	110
3'-0" OR LESS	9	9	9	9	9	9	9	9	9	9	9	9	9	9	9	9	9	9	9	9	9	9	9	9	9	9	9
	–	–	–	–	–	–	–	–	–	–	–	–	–	–	–	–	–	–	–	–	–	–	–	–	–	–	–
	9	9	9	9	9	9	9	9	9	9	9	9	9	9	9	9	9	9	9	9	9	9	9	9	9	9	9
	9	9	9	9	9	9	9	9	9	9	9	9	9	9	9	9	9	9	9	9	9	9	9	9	9	9	9
4'-0"	9	9	9	9	9	9	9	9	9	9	9	9	9	9	9	9	9	9	9	9	9	9	9	9	9	9	9
	–	–	–	–	–	–	–	–	–	–	–	–	–	–	–	–	–	–	–	–	–	–	–	–	–	–	–
	9	9	9	9	9	9	9	8	6	9	9	9	9	9	9	9	9	9	9	9	9	9	9	9	9	9	9
	9	9	9	9	9	9	9	9	9	9	9	9	9	9	9	9	9	9	9	9	9	9	9	9	9	9	9
5'-0"	9	9	9	9	9	9	9	7.5	6	9	9	9	9	9	9	9	9	9	9	9	9	9	9	9	9	9	9
	–	–	–	–	–	–	–	–	–	–	–	–	–	–	–	–	–	–	–	–	–	–	–	–	–	–	–
	9	9	9	9	9	8	5.5	4.5	3.5	9	9	9	9	9	9	9	9	9	9	9	9	9	9	9	9	9	9
	9	9	9	9	9	9	8.5	7	5.5	9	9	9	9	9	9	9	9	9	9	9	9	9	9	9	9	9	9
6'-0"	9	9	9	9	9	8.5	6.5	5	–	9	9	9	9	9	9	9	9	–	9	9	9	9	9	9	9	9	–
	–	–	–	–	–	–	–	–	–	–	–	–	–	–	–	–	–	–	–	–	–	–	–	–	–	–	–
	9	9	9	9	6.5	4.5	4	3	–	9	9	9	9	9	9	9	9	–	9	9	9	9	9	9	9	9	–
	9	9	9	9	9	7.5	5.5	4.5	–	9	9	9	9	9	9	9	9	–	9	9	9	9	9	9	9	9	–
7'-0"	9	9	9	9	8	6	4.5	–	–	9	9	9	9	9	9	9	–	–	9	9	9	9	9	9	9	–	–
	–	–	–	–	–	–	–	–	–	–	–	–	–	–	–	–	–	–	–	–	–	–	–	–	–	–	–
	9	9	6.5	4.5	3.5	3.5	–	–	–	9	9	9	9	9	9	9	–	–	9	9	9	9	9	9	9	–	–
	9	9	9	9	7	5.5	4	–	–	9	9	9	9	9	9	9	–	–	9	9	9	9	9	9	9	–	–
8'-0"	9	9	9	8.5	6	4.5	–	–	–	9	9	9	9	9	9	–	–	–	9	9	9	9	9	9	–	–	–
	–	–	–	–	–	–	–	–	–	–	–	–	–	–	–	–	–	–	–	–	–	–	–	–	–	–	–
	9	9	8	4.5	3.5	–	–	–	–	9	9	9	9	9	9	–	–	–	9	9	9	9	9	9	–	–	–
	9	9	9	7.5	5.5	4	–	–	–	9	9	9	9	9	9	–	–	–	9	9	9	9	9	9	–	–	–
9'-0"	9	9	9	6.5	4.5	–	–	–	–	9	9	9	9	9	–	–	–	–	9	9	9	9	9	–	–	–	–
	–	–	–	–	–	–	–	–	–	–	–	–	–	–	–	–	–	–	–	–	–	–	–	–	–	–	–
	9	9	5.5	3.5	–	–	–	–	–	9	9	9	9	9	–	–	–	–	9	9	9	9	9	–	–	–	–
	9	9	8.5	5.5	4	–	–	–	–	9	9	9	9	9	–	–	–	–	9	9	9	9	9	–	–	–	–
10'-0"	9	9	7.5	5	4	–	–	–	–	9	9	9	9	9	–	–	–	–	9	9	9	9	9	–	–	–	–
	–	–	–	–	–	–	–	–	–	–	–	–	–	–	–	–	–	–	–	–	–	–	–	–	–	–	–
	9	8	4.5	3	–	–	–	–	–	9	9	9	9	9	–	–	–	–	9	9	9	9	9	–	–	–	–
	9	9	7	4.5	–	–	–	–	–	9	9	9	9	9	–	–	–	–	9	9	9	9	9	–	–	–	–
11'-0"	9	9	6	4.5	3.5	–	–	–	–	9	9	9	9	9	–	–	–	–	9	9	9	9	9	–	–	–	–
	–	–	–	–	–	–	–	–	–	–	–	–	–	–	–	–	–	–	–	–	–	–	–	–	–	–	–
	9	6	3.5	–	–	–	–	–	–	9	9	9	9	9	–	–	–	–	9	9	9	9	9	–	–	–	–
	9	9	5.5	4	–	–	–	–	–	9	9	9	9	9	–	–	–	–	9	9	9	9	9	–	–	–	–
12'-0"	9	8.5	5	3.5	–	–	–	–	–	9	9	9	9	–	–	–	–	–	9	9	9	9	–	–	–	–	–
	–	–	–	–	–	–	–	–	–	–	–	–	–	–	–	–	–	–	–	–	–	–	–	–	–	–	–
	9	4.5	3	–	–	–	–	–	–	9	9	9	9	–	–	–	–	–	9	9	9	9	–	–	–	–	–
	9	7.5	4.5	–	–	–	–	–	–	9	9	9	9	–	–	–	–	–	9	9	9	9	–	–	–	–	–
13'-0"	9	7	–	–	–	–	–	–	–	9	9	–	–	–	–	–	–	–	9	9	–	–	–	–	–	–	–
	–	–	–	–	–	–	–	–	–	–	–	–	–	–	–	–	–	–	–	–	–	–	–	–	–	–	–
	8.5	4	–	–	–	–	–	–	–	9	9	–	–	–	–	–	–	–	9	9	–	–	–	–	–	–	–
	9	6	–	–	–	–	–	–	–	9	9	–	–	–	–	–	–	–	9	9	–	–	–	–	–	–	–

*SPECIFICATIONS ON ANCHOR REQUIREMENTS: POURED CONCRETE OR CONCRETE BLOCK SUBSTRATES

1. ANCHORS TO WALL SHALL BE AS FOLLOWS:

(A) TO EXISTING POURED CONCRETE:
- 1/4"ø TAPCON OR TAPCON W/ ADVANCED THREADFORM TECHNOLOGY, AS MANUFACTURED BY I.T.W. BUILDEX. (Min. f'c = 3 ksi).
- 1/4"ø x 3/4" ALL POINTS SOLID-SET ANCHORS AS DISTRIBUTED BY ALL POINTS SCREW, BOLT & SPECIALTY COMPANY. (Min. f'c = 3 ksi).
- 1/4"ø BLUE TAP CONCRETE ANCHORS WITH CAP, AS MANUFACTURED BY FLORIDA FASTENERS DIRECT, INC. (Min. f'c = 2 ksi).
- 1/4"ø TAPPER+ ANCHORS AS MANUFACTURED BY POWERS FASTENERS, INC. (Min. f'c = 3 ksi), AND DISTRIBUTED BY ALL POINTS SCREW, BOLT & SPECIALTY COMPANY OR ANY OTHER APPROVED LICENSED OR AUTHORIZED VENDOR REGISTERED W/ THE AMERICAN SHUTTER SYSTEMS ASSOCIATION, INC.

NOTES:

A.1) MINIMUM EMBEDMENT INTO POURED CONCRETE OF TAPCON OR TAPCON W/ ADVANCED THREADFORM TECHNOLOGY AND TAPPER+ ANCHORS IS 1 3/4", AND 1 1/2" FOR BLUE TAP WITH CAP ANCHORS.

A.2) MINIMUM EMBEDMENT OF 1/4"ø x 3/4" ALL POINTS SOLID-SET ANCHORS SHALL BE 7/8" INTO THE POURED CONCRETE. NO EMBEDMENT INTO STUCCO SHALL BE PERMITTED. 1/4" ø-20 S.S. MACHINE SCREW USED SHALL BE 1 1/2" LONG MINIMUM SHOULD STUCCO EXIST, AND 1" MINIMUM FOR WALLS WITH NO STUCCO.

A.3) IN CASE THAT PRECAST STONE, PRECAST CONCRETE PANELS, PAVERS OR ANY VENEER BE FOUND ON THE EXISTING WALL OR FLOOR, ANCHORS SHALL BE LONG ENOUGH TO REACH THE MAIN STRUCTURE BEHIND SAID WALL FINISHES. ANCHORAGE SHALL BE AS INDICATED ON NOTES A.1) & A.2) ABOVE. FOR INSTALLATIONS ON VINYL SIDING WITH OR WITHOUT METAL STUDS OR EIFS WITH WOOD STUDS CONSULT THIS ENGINEER. FOR INSTALLATIONS INTO EIFS WITH METAL STUDS SEE SHEET 10.

(B) TO EXISTING ASTM C-90 CONCRETE BLOCK WALL:
- 1/4"ø TAPCON OR TAPCON W/ ADVANCED THREADFORM TECHNOLOGY ANCHORS, AS MANUFACTURED BY I.T.W. BUILDEX.
- 1/4"ø x 3/4" ALL POINTS SOLID-SET ANCHORS AS DISTRIBUTED BY ALL POINTS SCREW, BOLT & SPECIALTY COMPANY.
- 1/4"ø BLUE TAP CONCRETE ANCHORS WITH CAP, AS MANUFACTURED BY FLORIDA FASTENERS DIRECT, INC.
- 1/4"ø TAPPER+ ANCHORS AS MANUFACTURED BY POWERS FASTENERS, INC., AND DISTRIBUTED BY ALL POINTS SCREW, BOLT & SPECIALTY COMPANY OR ANY OTHER APPROVED LICENSED OR AUTHORIZED VENDOR REGISTERED W/ THE AMERICAN SHUTTER SYSTEMS ASSOCIATION, INC.

NOTES:

B.1) MINIMUM EMBEDMENT INTO CONCRETE BLOCK OF TAPCON ANCHOR IS 1 1/4" AND 1" FOR TAPCON W/ ADVANCED THREADFORM TECHNOLOGY ANCHOR, AND 1 1/4" FOR TAPPER+ AND BLUE TAP WITH CAP ANCHORS.

B.2) MINIMUM EMBEDMENT OF 1/4"ø x 3/4" ALL POINTS SOLID-SET ANCHORS SHALL BE ENTIRELY EMBEDDED INTO THE CONCRETE BLOCK. NO EMBEDMENT INTO STUCCO SHALL BE PERMITTED. 1/4" ø-20 S.S. MACHINE SCREW USED SHALL BE 1 1/2" LONG MINIMUM SHOULD STUCCO EXIST, AND 1" MINIMUM FOR WALLS WITH NO STUCCO.

B.3) IN CASE THAT PRECAST STONE, PRECAST CONCRETE PANELS, PAVERS OR ANY VENEER BE FOUND ON THE EXISTING WALL OR FLOOR, ANCHORS SHALL BE LONG ENOUGH TO REACH THE MAIN STRUCTURE BEHIND SAID WALL FINISHES. ANCHORAGE SHALL BE AS INDICATED ON NOTES B.1) & B.2) ABOVE. FOR INSTALLATIONS ON VINYL SIDING WITH OR WITHOUT METAL STUDS OR EIFS WITH WOOD STUDS CONSULT THIS ENGINEER. FOR INSTALLATIONS INTO EIFS WITH METAL STUDS SEE SHEET 10.

(C) ANCHORS SHALL BE INSTALLED FOLLOWING ALL OF THE RECOMMENDATIONS AND SPECIFICATIONS OF THE ANCHOR'S MANUFACTURER.

(D) SEE SCHEDULE BELOW FOR EDGE DISTANCE (E.D.) VERSUS SPACING RELATIONSHIP FOR ANCHORS.

ANCHORS SPACING LEGEND

TAPCON OR TAPCON W/ ADVANCED THREADFORM TECHNOLOGY
ALL POINTS SOLID-SET
BLUE TAP WITH CAP
TAPPER +

EDGE DISTANCE VERSUS SPACING SCHEDULE FOR ANCHORS:

MAXIMUM ANCHOR SPACINGS ARE VALID FOR EDGE DISTANCES INDICATED BELOW. FOR E. D. LESS THAN THE INDICATED, REDUCE ANCHOR SPACING BY MULTIPLYING SPACING SHOWN ON SCHEDULE BY THE FOLLOWING FACTORS. REDUCED SPACING OBTAINED USING FACTOR SHALL NOT BE LESS THAN MINIMUM SPACING INDICATED FOR EACH ANCHOR TYPE.

ACTUAL EDGE DICTANCE E.D.	FACTOR						
	TAPCON	TAPCON WITH ADVANCED THREADFORM TECHNOLOGY		ALL POINTS SOLID SET	BLUE TAP WITH CAP	TAPPER + MIN. SPACING	
	MIN. SPACING = 3"	MIN. SPACING = 3"		MIN. SPACING = 3 1/2"	MIN. SPACING = 3"	3 3/4"	4"
	POURED CONCRETE & CONCRETE BLOCK MIN. E.D. = 3"	POURED CONCRETE MIN. E.D. = 3 1/2"	CONCRETE BLOCK MIN. E.D. = 2 1/2"	POURED CONCRETE & CONCRETE BLOCK MIN. E.D. = 3 1/2"	POURED CONCRETE & CONCRETE BLOCK MIN. E.D. = 3"	POURED CONCRETE MIN. E.D. = 3 1/2"	CONCRETE BLOCK MIN. E.D. = 2 1/2"
3"	1.0	0.90	1.0	0.78	1.0	0.84	1.0
2 1/2"	–	0.81	1.0	–	–	0.67	1.0
2"	–	0.71	–	–	–	0.51	–
1 3/4"	–	0.91	–	–	–	0.43	–
1 1/2"	0.35	–	–	–	–	0.35	–

① HV BLADE #3 OR ① HV BLADE #3 W/ ①A HV WINDOW BLADE WORKING IN UNISON◆

◆ SEE LIMITATIONS OF USE FOR BLADE ①A ON SHEET 18.

TEXAS DEPARTMENT OF INSURANCE – 2006

P.E. SEAL/SIGNATURE/DATE

WALTER A. TILLIT Jr. P.E.
PROFESSIONAL ENGINEER
6355 N.W. 36TH. ST., STE. 305
VIRGINIA GARDENS, FL. 33166
PHONE : (305) 871-1530 , FAX : (305) 871-1531
TEXAS LIC. # 90691
FIRM REGISTRATION # F-13790

A.S.S.A.
American Shutter Systems Association, Inc.
4268 Westroads Drive
West Palm Beach, FL 33407

© 2014 EASTERN METAL SUPPLY, INC.

BERTHA HV™
Accordion Shutter System
H.V. BLADE #3 W/ OR W/O H.V. WINDOW BLADE #3

REV. No	DESCRIPTION	DATE	DRAWN BY: A.G.
1	OLD 13-032	05/06/14	DATE: 04/02/13
2			DRAWING No
3			14-038
4			
5			SHEET
6			6 OF 18

ANCHORS SPACING LEGEND

TAPCON OR TAPCON W/ ADVANCED THREADFORM TECHNOLOGY
ALL POINTS SOLID-SET
BLUE TAP WITH CAP
TAPPER +

(1) HV BLADE #3 OR (1) HV BLADE #3 W/ (1A) HV WINDOW BLADE WORKING IN UNISON ◆

* SEE ANCHOR SPECIFICATIONS ON SHEET 6

◆ SEE LIMITATIONS OF USE FOR BLADE (1A) ON SHEET 18.

MAXIMUM ANCHOR * SPACING (in.) SCHEDULE FOR A GIVEN MAX. SHUTTER SPAN, A.S.D. DESIGN NEGATIVE PRESSURE RATING AND A CORRESPONDING MOUNTING TYPE FOR CONCRETE OR CONCRETE BLOCK INSTALLATIONS

(SEE MOUNTINGS 1 THRU 8, SEE SHEETS 9 & 10)

CONCRETE BLOCK

MAXIMUM SPAN (ft)	(1) & (2) WALL MOUNTINGS W/ (3) OR (4A)								(1) & (2) WALL MOUNTINGS W/ (4).								(3) & (4) WALL MOUNTING W/ (2) + (5)								(5) WALL SILL MOUNTING W/ (8) + (5)							
	A.S.D. DESIGN NEGATIVE LOAD (psf)								A.S.D. DESIGN NEGATIVE LOAD (psf)								A.S.D. DESIGN NEGATIVE LOAD (psf)								A.S.D. DESIGN NEGATIVE LOAD (psf)							
	30	40	50	60	70	80	90	110	30	40	50	60	70	80	90	110	30	40	50	60	70	80	90	110	30	40	50	60	70	80	90	110
3'-0" OR LESS	9	9	9	9	9	9	9	9	9	9	9	9	9	9	9	8	9	9	9	9	9	9	9	9	9	9	9	9	9	9	9	9
	–	–	–	–	–	–	–	–	–	–	–	–	–	–	–	–	–	–	–	–	–	–	–	–	–	–	–	–	–	–	–	–
	9	9	9	9	9	9	9	9	9	9	9	9	9	9	9	9	9	9	9	9	9	9	9	9	9	9	9	9	9	9	9	9
	9	9	9	9	9	9	9	9	9	9	9	9	9	9	9	9	9	9	9	9	9	9	9	9	9	9	9	9	9	9	9	9
4'-0"	9	9	9	9	9	9	9	8	9	9	9	9	9	9	5	–	9	9	9	9	9	9	9	8	9	9	9	9	9	9	9	9
	–	–	–	–	–	–	–	–	–	–	–	–	–	–	–	–	–	–	–	–	–	–	–	–	–	–	–	–	–	–	–	–
	9	9	9	9	9	9	9	3	9	9	9	9	9	9	6.5	3	9	9	9	9	9	9	9	9	9	9	9	9	9	9	9	9
	9	9	9	9	9	9	9	9	9	9	9	9	9	9	7	–	9	9	9	9	9	9	9	9	9	9	9	9	9	9	9	9
5'-0"	9	9	9	9	9	8.5	7.5	3	9	9	9	9	6	3.5	–	–	9	9	9	9	9	8.5	7.5	6	9	9	9	9	9	8.5	7.5	6
	–	–	–	–	–	–	–	–	–	–	–	–	–	–	–	–	–	–	–	–	–	–	–	–	–	–	–	–	–	–	–	–
	9	9	9	9	9	8	5.5	–	9	9	9	9	7	4	3	–	9	9	9	9	9	9	9	7.5	9	9	9	9	9	9	9	7.5
	9	9	9	9	9	9	9	4	9	9	9	9	8	4.5	–	–	9	9	9	9	9	9	9	6	9	9	9	9	9	9	9	8
6'-0"	9	9	9	9	8	6	3	–	9	9	9	5	3	–	–	–	9	9	9	9	8	7	6.5	–	9	9	9	9	8	7	6.5	–
	–	–	–	–	–	–	–	–	–	–	–	–	–	–	–	–	–	–	–	–	–	–	–	–	–	–	–	–	–	–	–	–
	9	9	9	8	6	4	4	–	9	9	9	6.5	3.5	–	–	–	9	9	9	9	9	8.5	7.5	–	9	9	9	9	9	8.5	7.5	–
	9	9	9	9	9	8	4	–	9	9	9	7	4.5	–	–	–	9	9	9	9	9	9	8	–	9	9	9	9	9	9	8	–
7'-0"	9	9	9	8	5.5	3	–	–	9	9	6	3	–	–	–	–	9	9	9	8	7	6	5.5	–	9	9	9	8	7	6.5	5.5	–
	–	–	–	–	–	–	–	–	–	–	–	–	–	–	–	–	–	–	–	–	–	–	–	–	–	–	–	–	–	–	–	–
	9	9	9	6	4.5	3.5	3	–	9	9	7	3.5	–	–	–	–	9	9	9	9	8.5	7.5	6.5	–	9	9	9	9	8.5	7.5	6.5	–
	9	9	9	9	7	–	–	–	9	9	7.5	4	–	–	–	–	9	9	9	9	9	8	7	–	9	9	9	9	9	8	7	–
8'-0"	9	9	8.5	6	3	–	–	–	9	9	3.5	–	–	–	–	–	9	9	8.5	7	6	5.5	–	–	9	9	8.5	7	6	5.5	–	–
	–	–	–	–	–	–	–	–	–	–	–	–	–	–	–	–	–	–	–	–	–	–	–	–	–	–	–	–	–	–	–	–
	9	9	8	4	3.5	–	–	–	9	6.5	4	–	–	–	–	–	9	9	9	8.5	7.5	6.6	–	–	9	9	9	8.5	7.5	6.5	–	–
	9	9	9	8	–	–	–	–	9	9	4.5	–	–	–	–	–	9	9	9	9	8	7	–	–	9	9	9	9	8	7	–	–
9'-0"	9	9	7.5	3	–	–	–	–	9	5	–	–	–	–	–	–	9	9	7.5	6.5	5.5	–	–	–	9	9	7.5	6.5	5.5	–	–	–
	–	–	–	–	–	–	–	–	–	–	–	–	–	–	–	–	–	–	–	–	–	–	–	–	–	–	–	–	–	–	–	–
	9	9	5	3.5	–	–	–	–	9	4	3	–	–	–	–	–	9	9	9	7.5	6.5	–	–	–	9	9	9	7.5	6.5	–	–	–
	9	9	9	4	–	–	–	–	9	7	–	–	–	–	–	–	9	9	9	8	7	–	–	–	9	9	9	8	7	–	–	–
10'-0"	9	8.5	4.5	–	–	–	–	–	9	3.5	–	–	–	–	–	–	9	8.5	7	5.5	5	–	–	–	9	8.5	7	5.5	5	–	–	–
	–	–	–	–	–	–	–	–	–	–	–	–	–	–	–	–	–	–	–	–	–	–	–	–	–	–	–	–	–	–	–	–
	9	8	4.5	3	–	–	–	–	9	3	–	–	–	–	–	–	9	9	8	7	6	–	–	–	9	9	8	7	6	–	–	–
	9	9	6	–	–	–	–	–	9	4.5	–	–	–	–	–	–	9	9	9	7.5	6.5	–	–	–	9	9	9	7.5	6.5	–	–	–
11'-0"	9	8	3	–	–	–	–	–	8	–	–	–	–	–	–	–	9	8	6	5	4	–	–	–	9	8	6	5	4.5	–	–	–
	–	–	–	–	–	–	–	–	–	–	–	–	–	–	–	–	–	–	–	–	–	–	–	–	–	–	–	–	–	–	–	–
	9	5	3	–	–	–	–	–	9	9	–	–	–	–	–	–	9	9	7.5	6	5	–	–	–	9	9	7.5	6	5.5	–	–	–
	7	9	4	–	–	–	–	–	7	–	–	–	–	–	–	–	9	9	9	6.5	5	–	–	–	9	9	8	6.5	5.5	–	–	–
12'-0"	9	6	–	–	–	–	–	–	5	–	–	–	–	–	–	–	9	7	5.5	4.5	–	–	–	–	9	7	5.5	4.5	–	–	–	–
	–	–	–	–	–	–	–	–	–	–	–	–	–	–	–	–	–	–	–	–	–	–	–	–	–	–	–	–	–	–	–	–
	9	4.5	3	–	–	–	–	–	6.5	–	–	–	–	–	–	–	9	8.5	7	5.5	–	–	–	–	9	8.5	7	5.5	–	–	–	–
	9	8	–	–	–	–	–	–	9	–	–	–	–	–	–	–	9	9	9	6	–	–	–	–	9	9	7.5	6	–	–	–	–
13'-0"	9	4	–	–	–	–	–	–	4	–	–	–	–	–	–	–	9	6.5	–	–	–	–	–	–	9	6.5	–	–	–	–	–	–
	–	–	–	–	–	–	–	–	–	–	–	–	–	–	–	–	–	–	–	–	–	–	–	–	–	–	–	–	–	–	–	–
	8	4	–	–	–	–	–	–	4.5	–	–	–	–	–	–	–	9	8	–	–	–	–	–	–	9	8	–	–	–	–	–	–
	9	5	–	–	–	–	–	–	5	–	–	–	–	–	–	–	9	8.5	–	–	–	–	–	–	9	8.5	–	–	–	–	–	–

POURED CONCRETE

MAXIMUM SPAN (ft)	(6) FLOOR MOUNTING W/ (8)								(7) CEILING MOUNTING W/ (2)								(8) FLOOR MOUNTING W/ (6) + (7)							
	A.S.D. DESIGN NEGATIVE LOAD (psf)								A.S.D. DESIGN NEGATIVE LOAD (psf)								A.S.D. DESIGN NEGATIVE LOAD (psf)							
	30	40	50	60	70	80	90	110	30	40	50	60	70	80	90	110	30	40	50	60	70	80	90	110
3'-0" OR LESS	9	9	9	9	9	9	9	9	9	9	9	9	9	9	9	9	9	9	9	9	9	9	9	9
	9	9	9	9	9	9	9	9	–	–	–	–	–	–	–	–	9	9	9	9	9	9	9	9
	9	9	9	9	9	9	9	9	9	9	9	9	9	9	9	9	9	9	9	9	9	9	9	9
	9	9	9	9	9	9	9	9	9	9	9	9	9	9	9	9	9	9	9	9	8	9	9	9
4'-0"	9	9	9	9	9	9	9	9	9	9	9	9	9	9	9	9	9	9	9	9	9	9	9	9
	9	9	9	9	9	9	9	9	–	–	–	–	–	–	–	–	9	9	9	9	9	9	9	9
	9	9	9	9	9	9	9	9	9	9	9	9	9	9	9	9	9	9	9	9	9	9	8.5	7
	9	9	9	9	9	9	9	9	9	9	9	9	9	9	9	9	9	9	9	9	9	9	9	8.5
5'-0"	9	9	9	9	9	9	9	9	9	9	9	9	9	9	9	9	9	9	9	9	9	9	9	7.5
	9	9	9	9	9	9	9	9	–	–	–	–	–	–	–	–	9	9	9	9	9	9	9	8.5
	9	9	9	9	9	9	9	9	9	9	9	9	9	9	8.5	7	9	9	9	9	8.5	7.5	6.5	5.5
	9	9	9	9	9	9	9	9	9	9	9	9	9	9	9	8.5	9	9	9	9	9	9	8.5	7
6'-0"	9	9	9	9	9	9	9	–	9	9	9	9	9	9	9	–	9	9	9	9	9	9	8.5	7.5
	9	9	9	9	9	9	9	–	–	–	–	–	–	–	–	–	9	9	9	9	9	9	8.5	–
	9	9	9	9	9	9	9	–	9	9	9	9	9	8	7	–	9	9	9	8.5	7	6	5.5	–
	9	9	9	9	9	9	9	–	9	9	9	9	9	9	8.5	–	9	9	9	9	9	8	7	–
7'-0"	9	9	9	9	9	9	9	–	9	9	9	9	9	9	8	–	9	9	9	9	9	8.5	7.5	6.5
	9	9	9	9	9	9	9	–	–	–	–	–	–	–	–	–	9	9	9	9	9	8.5	7.5	–
	9	9	9	9	9	9	9	–	9	9	9	9	8	7	6	–	9	9	8.5	7	6	5.5	4.5	–
	9	9	9	9	9	9	9	–	9	9	9	9	9	8	7.5	–	9	9	9	9	7.5	6.5	6	–
8'-0"	9	9	9	9	9	9	–	–	9	9	9	9	9	8	–	–	9	9	9	8.5	7.5	6.5	–	–
	9	9	9	9	9	9	–	–	–	–	–	–	–	–	–	–	9	9	9	9	8	7.5	–	–
	9	9	9	9	9	9	–	–	9	9	9	8	7	6	–	–	9	9	7.5	6	5.5	4.5	–	–
	9	9	9	9	9	9	–	–	9	9	9	8	7	6	–	–	9	9	9	8	6.5	6	–	–
9'-0"	9	9	9	9	9	9	–	–	9	9	9	9	9	8	–	–	9	9	9	7.5	6.5	–	–	–
	9	9	9	9	9	9	–	–	–	–	–	–	–	–	–	–	9	9	9	8.5	7.5	–	–	–
	9	9	9	9	9	9	–	–	9	9	9	7	6	–	–	–	9	8.5	6.5	5.5	4.5	–	–	–
	9	9	9	9	9	9	–	–	9	9	9	8.5	7.5	–	–	–	9	9	8.5	7	6	–	–	–
10'-0"	9	9	9	9	9	9	–	–	9	9	9	8.5	7	–	–	–	9	9	8.5	7	6	–	–	–
	9	9	9	9	9	9	–	–	–	–	–	–	–	–	–	–	9	9	9	8	6.5	–	–	–
	9	9	9	9	9	9	–	–	9	9	8.5	6.5	5.5	–	–	–	9	7.5	6	5	4	–	–	–
	9	9	9	9	9	9	–	–	9	9	9	7.5	6.5	–	–	–	9	9	7.5	6.5	5.5	–	–	–
11'-0"	9	9	9	9	9	9	–	–	9	9	9	7.5	6.5	–	–	–	9	9	7.5	6.5	5.5	–	–	–
	9	9	9	9	9	9	–	–	–	–	–	–	–	–	–	–	9	9	8.5	7	6	–	–	–
	9	9	9	9	9	9	–	–	9	9	7	6	5	–	–	–	9	7	5.5	4.5	4	–	–	–
	9	9	9	9	9	9	–	–	9	9	8.5	7	6	–	–	–	9	8.5	7	5.5	5	–	–	–
12'-0"	9	9	9	9	9	9	–	–	9	9	8.5	7	–	–	–	–	9	8.5	7	5.5	–	–	–	–
	9	9	9	9	9	9	–	–	–	–	–	–	–	–	–	–	9	9	8	6.5	–	–	–	–
	9	9	9	9	9	9	–	–	9	9	6.5	5.5	–	–	–	–	8.5	6	5	4	–	–	–	–
	9	9	9	9	9	9	–	–	9	9	7.5	6.5	–	–	–	–	9	8	6.5	5	–	–	–	–
13'-0"	9	9	–	–	–	–	–	–	9	9	–	–	–	–	–	–	9	8	–	–	–	–	–	–
	–	–	–	–	–	–	–	–	–	–	–	–	–	–	–	–	9	9	–	–	–	–	–	–
	9	9	–	–	–	–	–	–	9	8	–	–	–	–	–	–	7.5	5.5	–	–	–	–	–	–
	9	9	–	–	–	–	–	–	9	8	–	–	–	–	–	–	9	7	–	–	–	–	–	–

TEXAS DEPARTMENT OF INSURANCE – 2006

P.E. SEAL/SIGNATURE/DATE

WALTER A. TILLIT Jr. P.E.
PROFESSIONAL ENGINEER
6355 N.W. 36TH. ST., STE. 305
VIRGINIA GARDENS, FL. 33166
PHONE : (305) 871-1530 , FAX : (305) 871-1531
TEXAS LIC. # 90691
FIRM REGISTRATION # F-13790

A.S.S.A.
American Shutter Systems Association, Inc.
4268 Westroads Drive
West Palm Beach, FL 33407

© 2014 EASTERN METAL SUPPLY, INC.

BERTHA HV™
Accordion Shutter System
H.V. BLADE #3 W/ OR W/O H.V. WINDOW BLADE #3

REV. No	DESCRIPTION	DATE	DRAWN BY: A.G.
1	OLD 13-032	05/08/14	DATE: 04/02/13
2			DRAWING No 14-038
3			
4			
5			SHEET 7 OF 18
6			

MAXIMUM ANCHOR +SPACING (in.) SCHEDULE FOR A GIVEN MAX. SHUTTER SPAN, A.S.D. DESIGN NEGATIVE PRESSURE RATING AND A CORRESPONDING MOUNTING TYPE.

(SEE MOUNTINGS ON SHEETS 14 & 15).

SUBSTRATE: SOUTHERN PINE No. 2 W/ MIN. G=0.55, DOUGLAS FIR W/ MIN. G=0.50

MAXIMUM SPAN (ft)	WALL MOUNTINGS 1W, 4W, 7W, 9W & 10W — A.S.D. DESIGN NEGATIVE LOAD (psf)									CEILING MOUNT 3W FLOOR MOUNTINGS 6W & 8W — A.S.D. DESIGN NEGATIVE LOAD (psf)								
	30	40	50	60	70	80	90	100	110	30	40	50	60	70	80	90	100	110
3'-0" OR LESS	9	9	9	9	9	9	9	9	9	9	9	9	9	9	8	7	6.5	6
4'-0"	9	9	9	9	9	9	9	9	8	9	9	9	8	7	6	5.5	5	4.5
5'-0"	9	9	9	9	9	9	7.5	6	4.5	9	9	8	6.5	5.5	5	4	4	3.5
6'-0"	9	9	9	9	9	8	5	4	3.5	9	8	6.5	5.5	4.5	4	3.5	3	3
7'-0"	9	9	9	9	6	4.5	–	–	–	9	7	5.5	4.5	4	3.5	–	–	–
8'-0"	9	9	9	6.5	4.5	4.5	–	–	–	8	6	5	4	2.5	3	–	–	–
9'-6"	9	9	6	4	3.5	–	–	–	–	6.5	5	4	3	2.5	–	–	–	–
10'-0"	9	9	6	4	–	–	–	–	–	6.5	5	4	3	–	–	–	–	–
11'-0"	9	9	4.5	3	–	–	–	–	–	6	4.5	3.5	2.5	–	–	–	–	–
12'-0"	9	9	3.5	–	–	–	–	–	–	5.5	4	3	–	–	–	–	–	–
13'-0"	9	5.5	3.5	–	–	–	–	–	–	5	3.5	3	–	–	–	–	–	–

SUBSTRATE: SPRUCE PINE FIR NORTH W/ MIN. G=0.43

MAXIMUM SPAN (ft)	WALL MOUNTINGS 1W, 4W, 7W, 9W & 10W — A.S.D. DESIGN NEGATIVE LOAD (psf)									CEILING MOUNT 3W FLOOR MOUNTINGS 6W & 8W — A.S.D. DESIGN NEGATIVE LOAD (psf)								
	30	40	50	60	70	80	90	100	110	30	40	50	60	70	80	90	100	110
3'-0" OR LESS	9	9	9	9	9	9	9	9	9	9	9	9	9	8	7	6	5.5	5
4'-0"	9	9	9	9	9	9	9	9	9	9	9	8.5	7	6	5	4.5	4	3.5
5'-0"	9	9	9	9	9	8	9	8	8	9	8.5	6.5	5.5	4.5	4	3.5	3	3
6'-0"	9	9	9	9	6.5	4.5	9	8	–	9	7	5.5	4.5	4	3.5	3	2.5	–
7'-0"	9	9	9	9	4.5	3.5	–	–	–	8	6	4.5	4	3.5	3	–	–	–
8'-0"	9	9	8	8	3.5	2.5	–	–	–	7	5	4	3.5	3	2	–	–	–
9'-6"	9	8	5.5	3	2.5	–	–	–	–	5.5	4	3	2.5	2.5	–	–	–	–
10'-0"	9	8	4	2.5	–	–	–	–	–	5.5	4	3	2.5	–	–	–	–	–
11'-0"	9	6	3.5	–	–	–	–	–	–	5	3.5	3	2	–	–	–	–	–
12'-0"	9	4	2.5	–	–	–	–	–	–	4.5	3.5	2.5	–	–	–	–	–	–
13'-0"	8.5	4	2.5	–	–	–	–	–	–	4	3	–	–	–	–	–	–	–

SUBSTRATE: SPRUCE PINE FIR SOUTH W/ MIN. G=0.36 / 1/2" MIN. CDX PLYWOOD

MAXIMUM SPAN (ft)	WALL MOUNTINGS 1W, 4W, 7W, 9W & 10W — A.S.D. DESIGN NEGATIVE LOAD (psf)									CEILING MOUNT 3W FLOOR MOUNTINGS 6W & 8W — A.S.D. DESIGN NEGATIVE LOAD (psf)									WALL MOUNTING 5W — A.S.D. DESIGN NEGATIVE LOAD (psf)			
	30	40	50	60	70	80	90	100	110	30	40	50	60	70	80	90	100	110	30	40	50	62
3'-0" OR LESS	9	9	9	9	9	9	9	9	9	9	9	9	7.5	6.5	5.5	5	4.5	4	9	9	9	9
4'-0"	9	9	9	9	9	9	8	5.5	4	9	8.5	7	5.5	5	4	3.5	3.5	3	9	9	9	9
5'-0"	9	9	9	9	9	5.5	4	3	2.5	9	7	5.5	4.5	4	3.5	3	2.5	2.5	9	9	9	9
6'-0"	9	9	9	8	4.5	3	2.5	–	–	7.5	5.5	4.5	3.5	3	8	2.5	2	–	9	9	9	4.5
7'-0"	9	9	9	4.5	3	2.5	–	–	–	6.5	5	4	3	2.5	2.5	–	–	–	9	9	6.5	2.5
8'-0"	9	8	5.5	3	2.5	–	–	–	–	5.5	4	3.5	2.5	2	2	–	–	–	9	9	3.5	2
9'-6"	9	5.5	3	2.5	–	–	–	–	–	4.5	3.5	2.5	2	2	–	–	–	–	9	4.5	2	–
10'-0"	9	5.5	3	–	–	–	–	–	–	4.5	3.5	2.5	2	–	–	–	–	–	–	–	–	–
11'-0"	9	4	2.5	–	–	–	–	–	–	4	3	2	–	–	–	–	–	–	–	–	–	–
12'-0"	8	3	–	–	–	–	–	–	–	4	2.5	–	–	–	–	–	–	–	–	–	–	–
13'-0"	6	2.5	–	–	–	–	–	–	–	3.5	2.5	–	–	–	–	–	–	–	–	–	–	–

+NOTES ON ANCHORS REQUIREMENTS: WOOD SUBSTRATES.

1. ANCHORS TO WALL, FLOOR OR SOLID WOOD SOFFIT SHALL BE AS FOLLOWS:
   – 1/4"ø TAPCON OR TAPCON W/ ADVANCED THREADFORM TECHNOLOGY ANCHORS, AS MANUFACTURED BY I.T.W. BUILDEX W/ MINIMUM PENETRATION OF THREADED AREA AS INDICATED AT EACH SECTION ON SHEETS 14 & 15.
   EXCEPTION: SEE NOTE 2 BELOW.
2. ANCHORS TO HOLLOW CEILING SHALL BE AS PER MOUNTING TYPE 2W, SHEET 14 AND SHALL CONSIST OF LAG SCREWS AS PER NDS 2005 SPECIFICATIONS.
3. SUBSTRATE SHALL CONSIST OF THE FOLLOWING:
   –SOUTHERN PINE No. 2 W/ G=0.55 (N.D.S)
   –DOUGLAS FIR W/ G=0.50 (N.D.S.)
   –SPRUCE PINE FIR NORTH W/ G=0.43 (N.D.S.)
   –SPRUCE PINE FIR SOUTH W/ G=0.36 (N.D.S.)
   –MIN. 1/2" CDX PLYWOOD (1986 APA)
4. ANCHORS SHALL BE INSTALLED FOLLOWING ALL OF THE RECOMMENDATIONS AND SPECIFICATIONS PER NDS 2005

(1) HV BLADE #3 OR (1) HV BLADE #3 W/ (1A) HV WINDOW BLADE #3 WORKING IN UNISON ◆

◆SEE LIMITATIONS OF USE FOR BLADE (1A) ON SHEET 18.

TEXAS DEPARTMENT OF INSURANCE – 2006

P.E. SEAL/SIGNATURE/DATE

9/2/14

WALTER A. TILLIT Jr. P.E.
PROFESSIONAL ENGINEER
6355 N.W. 36TH. ST., STE. 305
VIRGINIA GARDENS, FL. 33166
PHONE : (305) 871–1530 , FAX : (305) 871–1531
TEXAS LIC. # 90691
FIRM REGISTRATION # F–13790

A.S.S.A.
American Shutter Systems Association, Inc.
4268 Westroads Drive
West Palm Beach, FL 33407

© 2014 EASTERN METAL SUPPLY, INC.

BERTHA HV™
Accordion Shutter System
H.V. BLADE #3 W/ OR W/O H.V. WINDOW BLADE #3

REV. No	DESCRIPTION	DATE	DRAWN BY: A.G.
1	OLD 13–032	05/06/14	DATE: 04/02/13
2			DRAWING No
3			14–038
4			
5			SHEET
6			8 OF 18

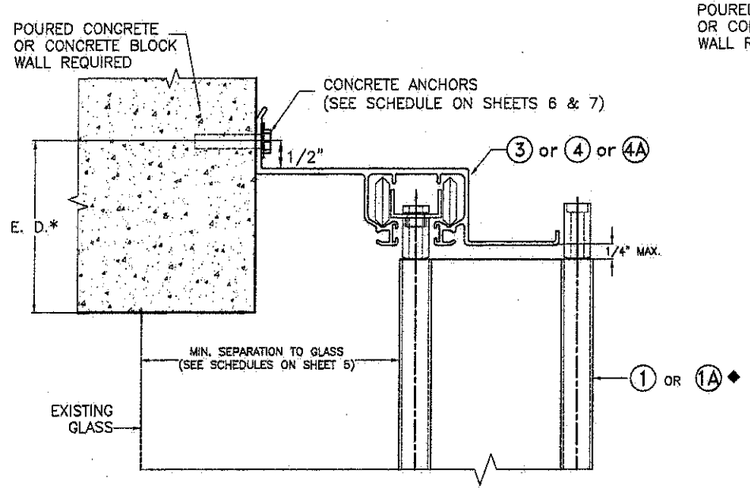

① WALL MOUNTING INSTALLATION

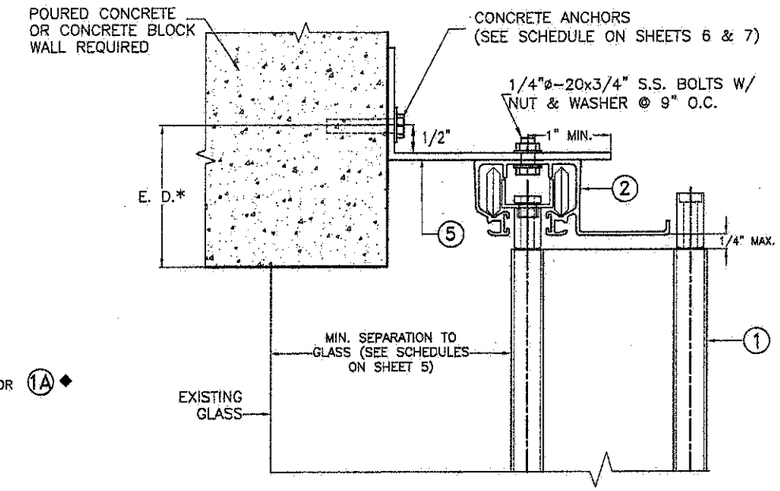

③ WALL MOUNTING INSTALLATION

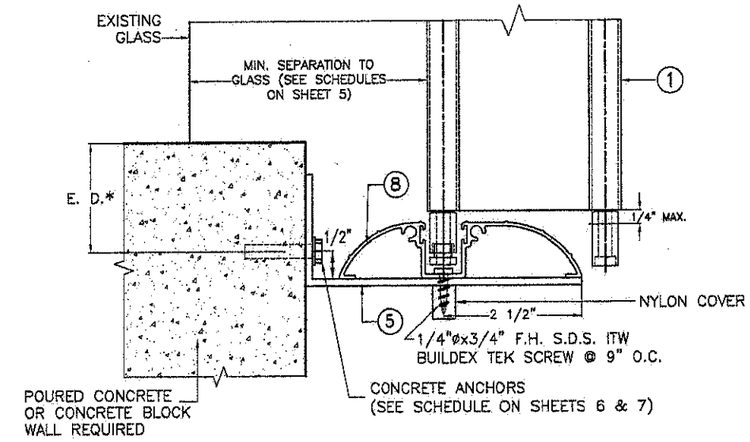

⑤ WALL MOUNTING INSTALLATION

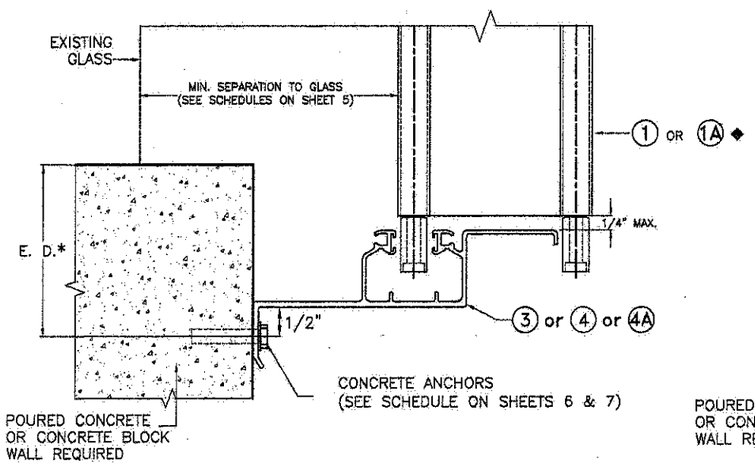

② WALL MOUNTING INSTALLATION

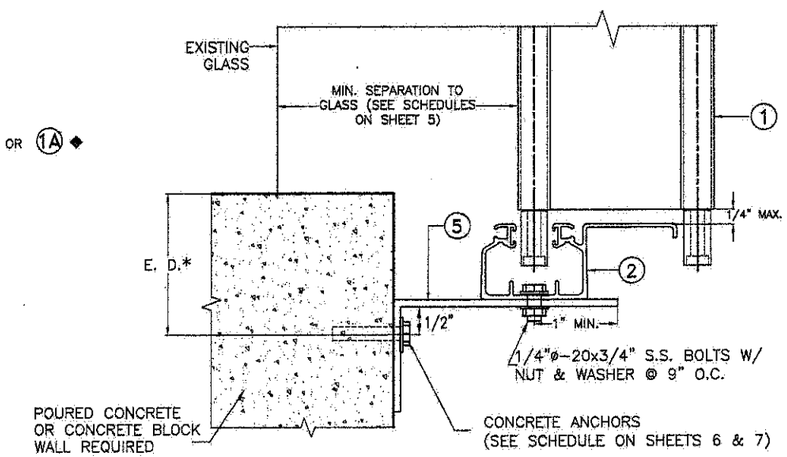

④ WALL MOUNTING INSTALLATION

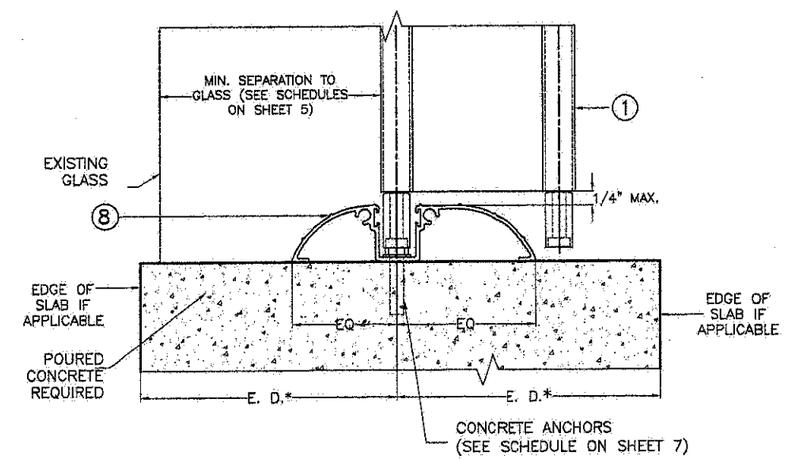

⑥ FLOOR MOUNTING INSTALLATION

NOTE FOR COMBINATION OF SECTIONS:

1- SEE SHEET 3 FOR TYPICAL SHUTTER ASSEMBLY
2- MOUNTING SECTIONS CAN BE COMBINED IN ANY WAY TO SUIT ANY INSTALLATION.

* E.D. = EDGE DISTANCE (SEE NOTES & SCHEDULE ON SHEET 7)

◆ SEE LIMITATIONS OF USE FOR BLADE 1A ON SHEET 18.

INSTALLATION DETAILS

SCALE 3/8"=1"

TEXAS DEPARTMENT OF INSURANCE – 2006

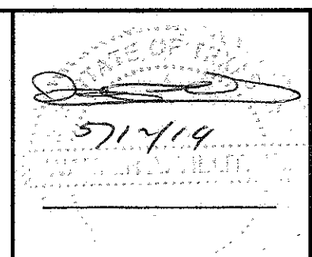

P.E. SEAL/SIGNATURE/DATE

WALTER A. TILLIT Jr. P.E.
PROFESSIONAL ENGINEER

6355 N.W. 36TH. ST., STE. 305
VIRGINIA GARDENS, FL 33166
PHONE : (305) 871-1530 , FAX : (305) 871-1531

TEXAS LIC. # 90691
FIRM REGISTRATION # F-13790

A.S.S.A.
American Shutter Systems Association, Inc.
4268 Westroads Drive
West Palm Beach, FL 33407

© 2014 EASTERN METAL SUPPLY, INC.

BERTHA HV™
Accordion Shutter System
H.V. BLADE #3 W/ OR W/O H.V. WINDOW BLADE #3

REV. No	DESCRIPTION	DATE	DRAWN BY: A.G.
1	OLD 13-032	05/06/14	DATE: 04/02/13
2			DRAWING No
3			14-038
4			
5			SHEET
6			9 OF 18

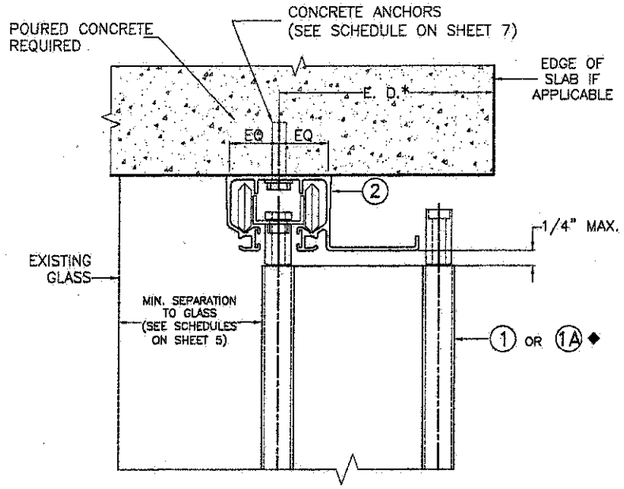

7 CEILING MOUNTING INSTALLATION

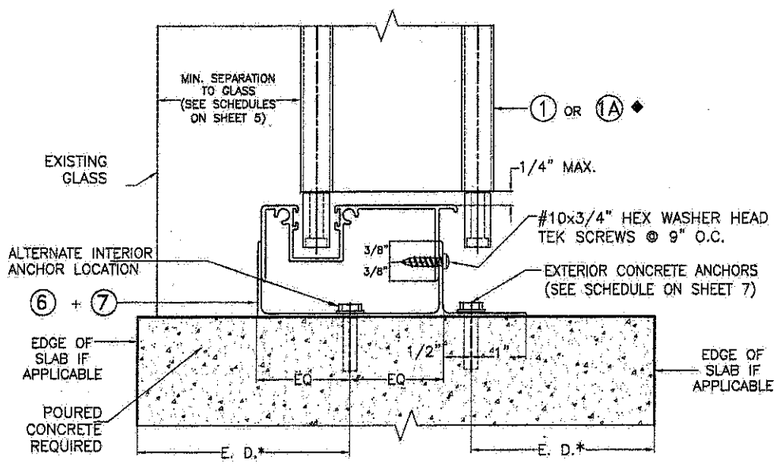

8 FLOOR MOUNTING INSTALLATION Ω

Ω NOTE: THIS INSTALLATION SHALL BE REMOVABLE WHEN PERFORMED ADJACENT TO AN OPERABLE EXIT OR ENTRANCE

* E.D. = EDGE DISTANCE (SEE NOTES & SCHEDULE ON SHEET 7)

NOTE FOR COMBINATION OF SECTIONS:

1- SEE SHEET 3 FOR TYPICAL SHUTTER ASSEMBLY
2- MOUNTING SECTIONS CAN BE COMBINED IN ANY WAY TO SUIT ANY INSTALLATION.

◆ SEE LIMITATIONS OF USE FOR BLADE 1A ON SHEET 18.

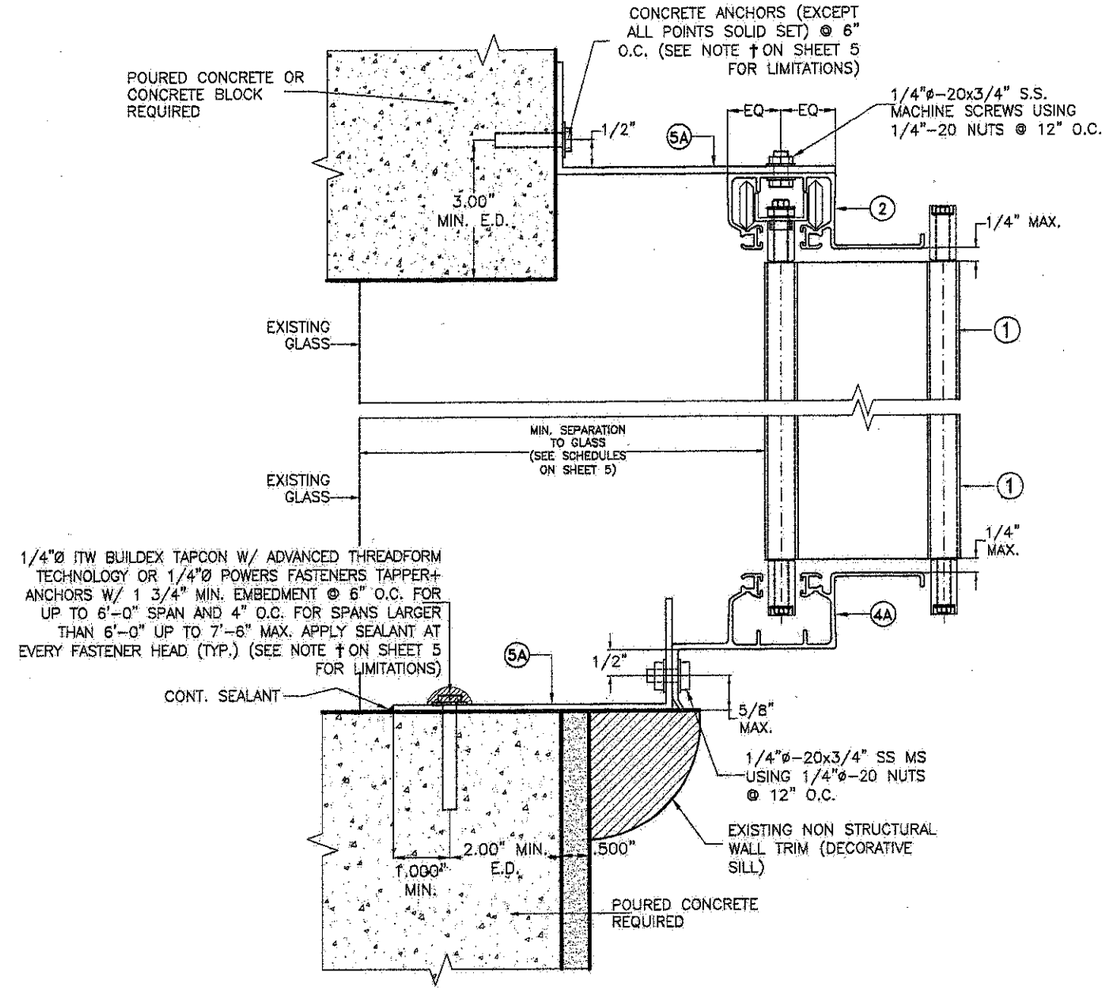

9 KEYSTONE MOUNTING INSTALLATION

MAXIMUM A.S.D. DESIGN PRESSURE: +64,-72 psf
MAXIMUM SHUTTER SPAN 7'-6"

INSTALLATION DETAILS (CONTINUED)

SCALE 3/8"=1"

TEXAS DEPARTMENT OF INSURANCE – 2006

P.E. SEAL/SIGNATURE/DATE

WALTER A. TILLIT Jr. P.E.
PROFESSIONAL ENGINEER

6355 N.W. 36TH. ST., STE. 305
VIRGINIA GARDENS, FL. 33166
PHONE : (305) 871-1530 , FAX : (305) 871-1531

TEXAS LIC. # 90691
FIRM REGISTRATION # F-13790

A.S.S.A.
American Shutter Systems Association, Inc.
4268 Westroads Drive
West Palm Beach, FL 33407

© 2014 EASTERN METAL SUPPLY, INC.

BERTHA HV™
Accordion Shutter System
H.V. BLADE #3 W/ OR W/O H.V. WINDOW BLADE #3

REV. No	DESCRIPTION	DATE	DRAWN BY: A.G.
1			DATE: 04/02/13
2			DRAWING No
3			14-038
4			
5			SHEET
6			10 OF 18

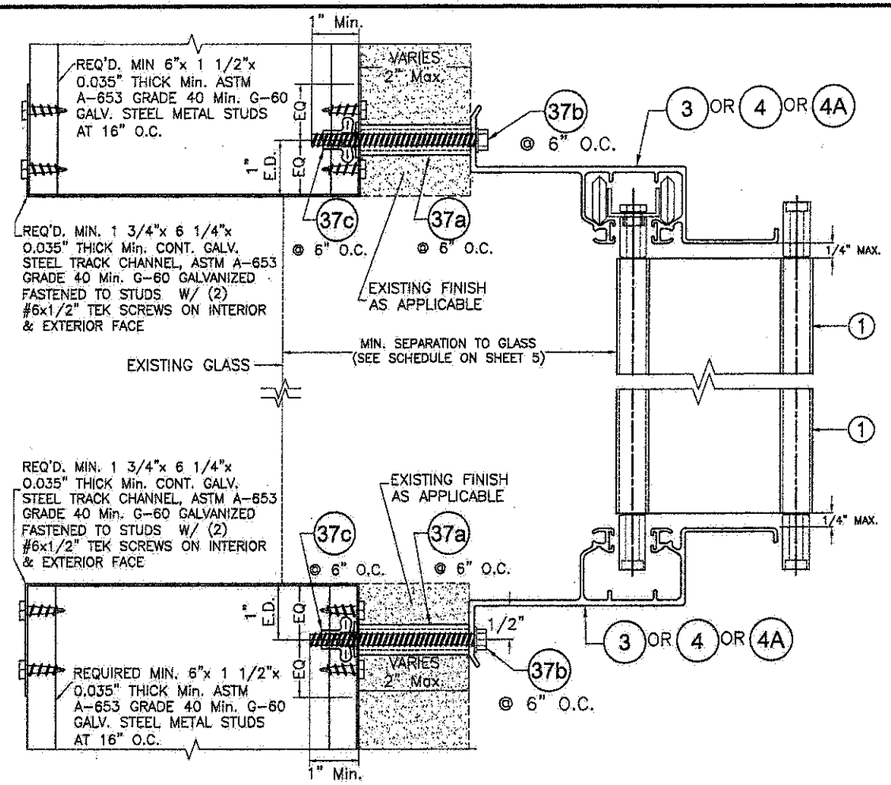

10 B.O. WALL MOUNTING INSTALLATION

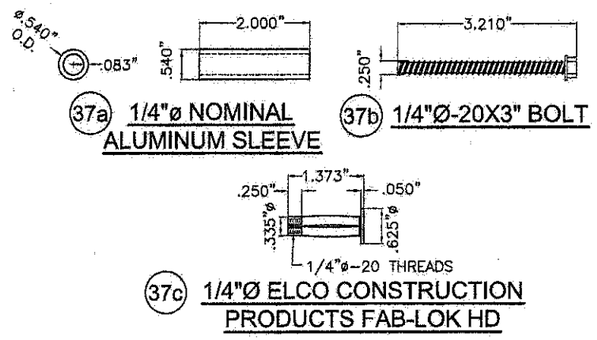

INSTALLATION DETAILS (CONTINUED)

SCALE 3/8"=1"

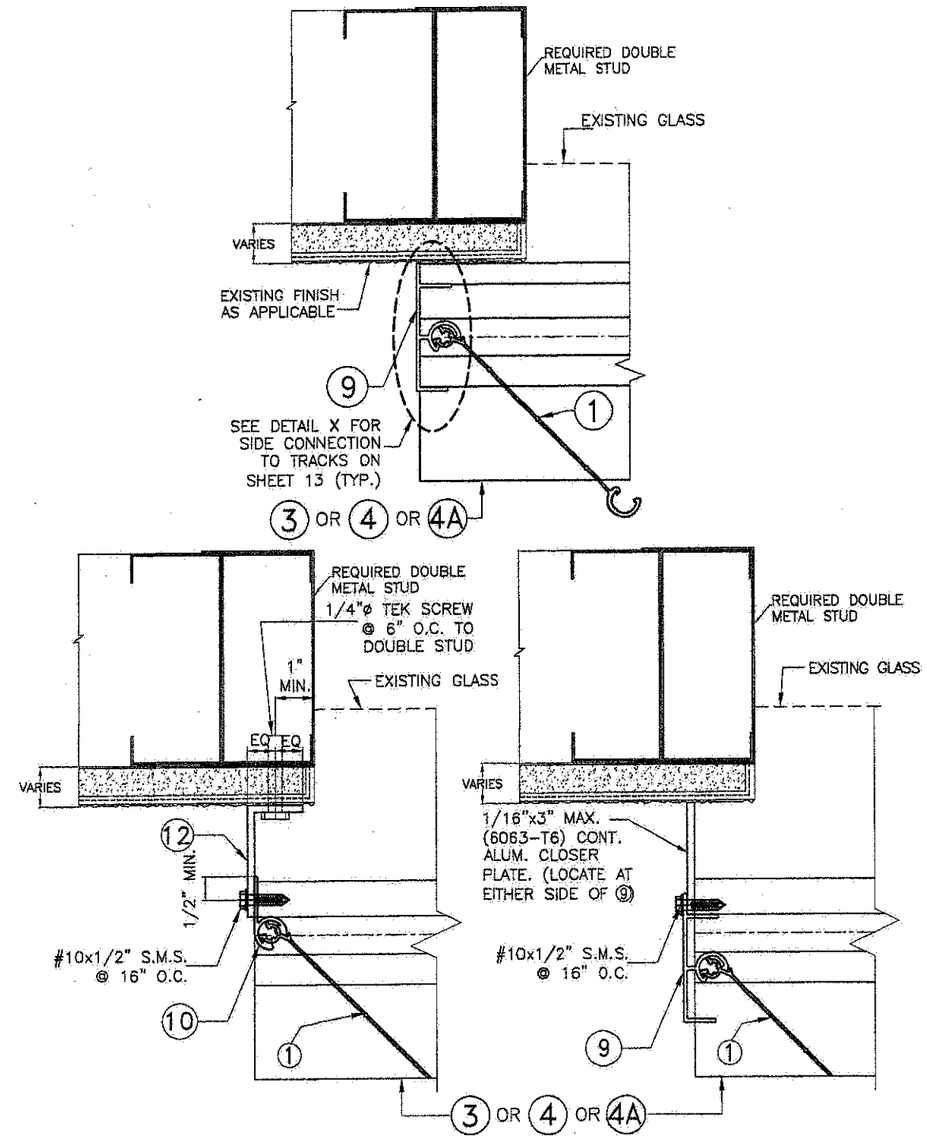

END INSTALLATION INTO METAL STUD WALL

SCALE 3/8"=1"

TEXAS DEPARTMENT OF INSURANCE – 2006

P.E. SEAL/SIGNATURE/DATE

WALTER A. TILLIT Jr. P.E.
PROFESSIONAL ENGINEER

6355 N.W. 36TH. ST., STE. 305
VIRGINIA GARDENS, FL 33166
PHONE : (305) 871-1530 , FAX : (305) 871-1531

TEXAS LIC. # 90691
FIRM REGISTRATION # F-13790

A.S.S.A.
American Shutter Systems Association, Inc.
4268 Westroads Drive
West Palm Beach, FL 33407

© 2014 EASTERN METAL SUPPLY, INC.

BERTHA HV™
Accordion Shutter System
H.V. BLADE #3 W/ OR W/O H.V. WINDOW BLADE #3

REV. No	DESCRIPTION	DATE	DRAWN BY: A.G.
1	OLD 13-032	05/06/14	DATE: 04/02/13
2			DRAWING No
3			14-038
4			
5			SHEET
6			10A OF 18

INSTALLATION WITH (1) OR (1A)◆ HV BLADE W/ HV CENTERMATES (13) & (14)

SCALE 3/8"=1"

* SEE NOTES ON HV LOCK (15) AND ALTERNATE LOCKS (16) OR (17) ON SHEET 4.

◆ SEE LIMITATIONS OF USE FOR BLADE (1A) ON SHEET 18.

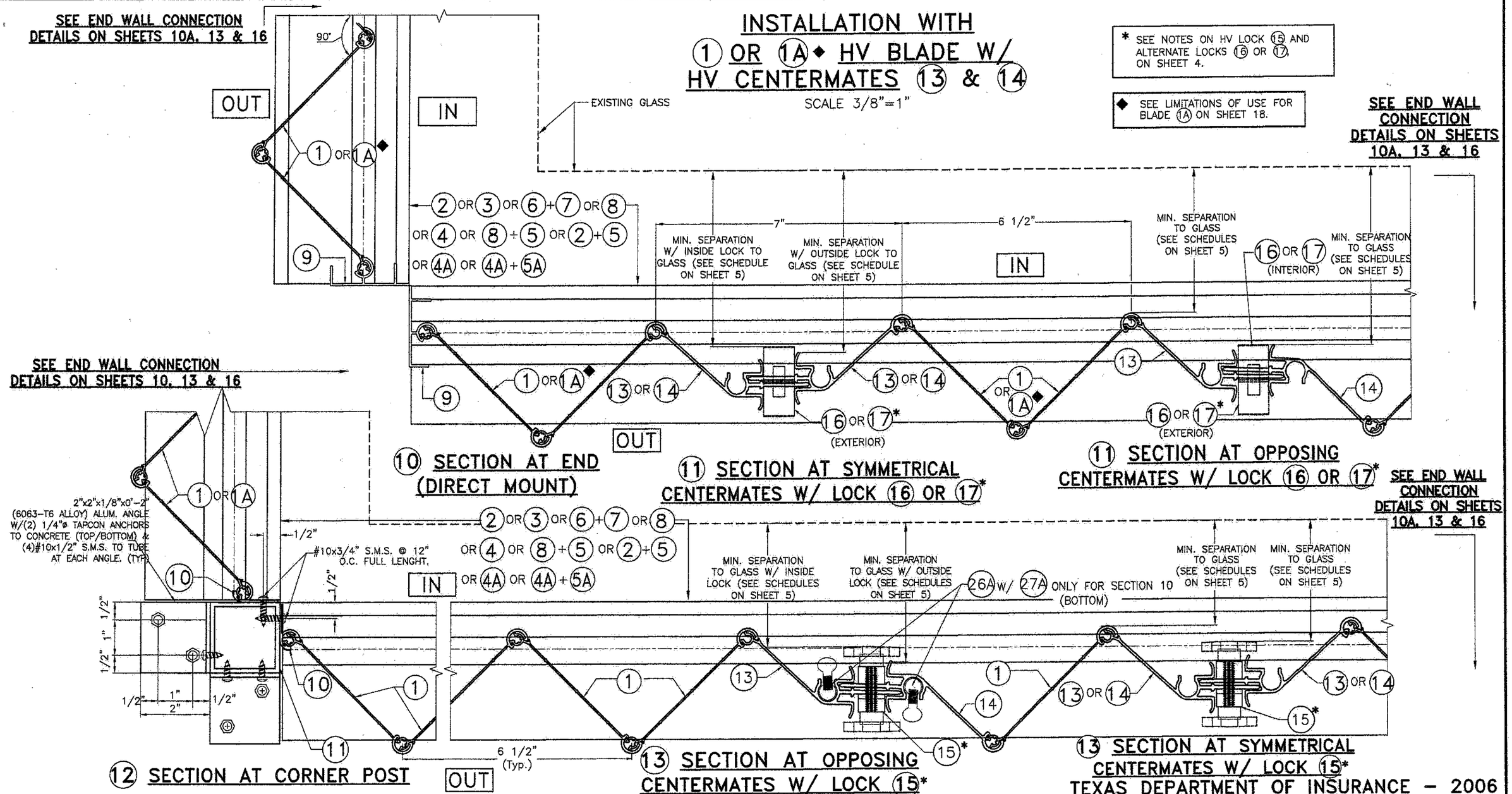

(10) SECTION AT END (DIRECT MOUNT)

(11) SECTION AT SYMMETRICAL CENTERMATES W/ LOCK (16) OR (17)*

(11) SECTION AT OPPOSING CENTERMATES W/ LOCK (16) OR (17)*

(12) SECTION AT CORNER POST

(13) SECTION AT OPPOSING CENTERMATES W/ LOCK (15)*

(13) SECTION AT SYMMETRICAL CENTERMATES W/ LOCK (15)*

TEXAS DEPARTMENT OF INSURANCE – 2006

STATE OF TEXAS
5/12/14
WALTER A. TILLIT

P.E. SEAL/SIGNATURE/DATE

WALTER A. TILLIT Jr. P.E.
PROFESSIONAL ENGINEER

6355 N.W. 36TH. ST., STE. 305
VIRGINIA GARDENS, FL. 33166
PHONE : (305) 871-1530 , FAX : (305) 871-1531

TEXAS LIC. # 90691
FIRM REGISTRATION # F-13790

A.S.S.A.
American Shutter Systems Association, Inc.
4268 Westroads Drive
West Palm Beach, FL 33407

© 2014 EASTERN METAL SUPPLY, INC.

BERTHA HV™
Accordion Shutter System
H.V. BLADE #3 W/ OR W/O H.V. WINDOW BLADE #3

REV. No	DESCRIPTION	DATE	DRAWN BY: A.G.
1	OLD 13-032	05/06/14	DATE: 04/02/13
2			DRAWING No
3			14-038
4			
5			SHEET
6			11 OF 18

INSTALLATION WITH (1) HV BLADE W/ HV "T" LOCK CENTERMATES (18) & (19)

SCALE 3/8"=1"

† SERIES 9444 ALUMINUM (2024-T3 ALLOY) LARGE FLANGE THIN SHEET NUTSERT, PART # 0820, AS MANUFACTURED BY AVDEL CHERRY TEXTORN, PARSIPPENY, NEW JERSEY 07054 OR EQUAL.

* SEE NOTES ON HV "T" LOCKS (21) ON SHEET 4.

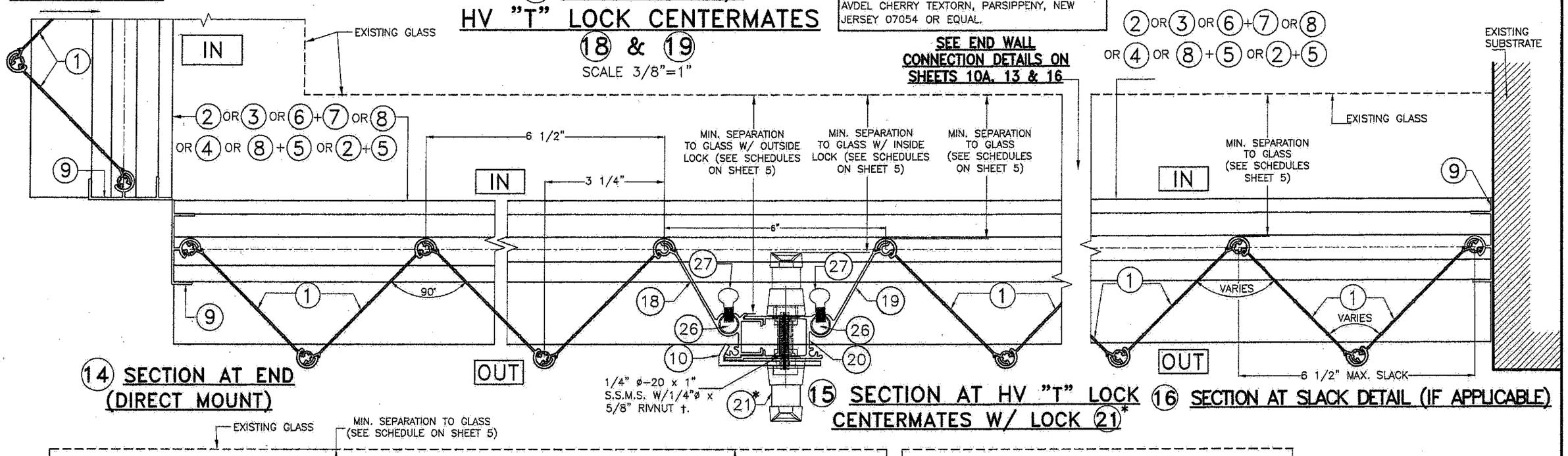

(14) SECTION AT END (DIRECT MOUNT)

(15) SECTION AT HV "T" LOCK CENTERMATES W/ LOCK (21)*

(16) SECTION AT SLACK DETAIL (IF APPLICABLE)

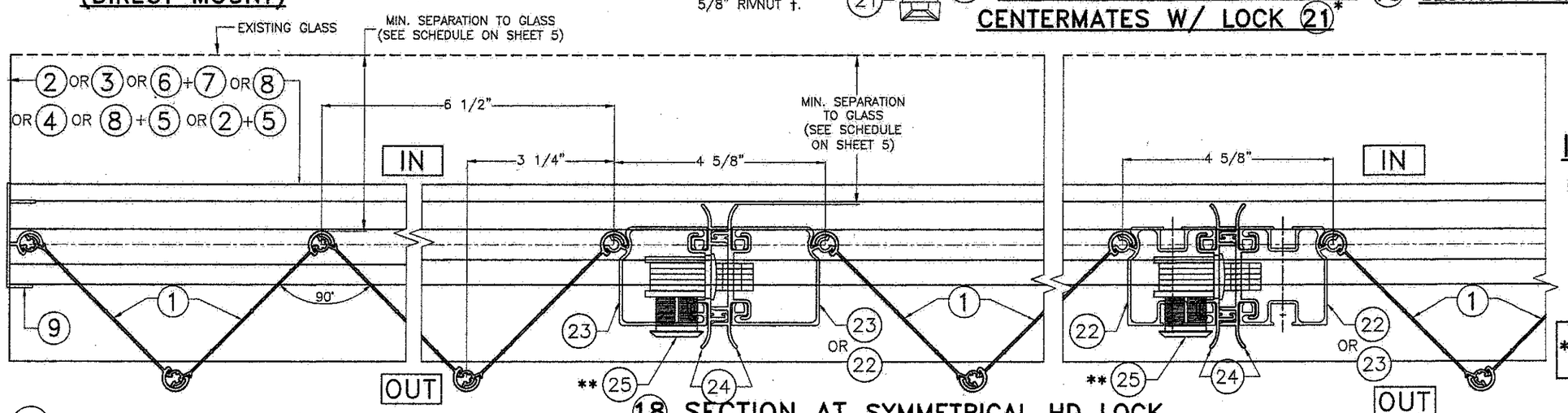

(17) SECTION AT END (DIRECT MOUNT)

(18) SECTION AT SYMMETRICAL HD LOCK CENTERMATES W/ HD LOCK (25)

INSTALLATION WITH (1) HV BLADE W/ HD CENTERMATES (22), (23), (24)

SCALE 3/8"=1"

**SEE NOTES ON HD LOCKS (25) ON SHEET 4.

TEXAS DEPARTMENT OF INSURANCE – 2006

P.E. SEAL/SIGNATURE/DATE

WALTER A. TILLIT Jr. P.E.
PROFESSIONAL ENGINEER
6355 N.W. 36TH. ST., STE. 305
VIRGINIA GARDENS, FL. 33166
PHONE : (305) 871-1530 , FAX : (305) 871-1531
TEXAS LIC. # 90691
FIRM REGISTRATION # F-13790

A.S.S.A.
American Shutter Systems Association, Inc.
4268 Westroads Drive
West Palm Beach, FL 33407

© 2014 EASTERN METAL SUPPLY, INC.

BERTHA HV™
Accordion Shutter System
H.V. BLADE #3 W/ OR W/O H.V. WINDOW BLADE #3

REV. No	DESCRIPTION	DATE	DRAWN BY: A.G.
1	OLD 13-032	05/06/14	DATE: 04/02/13
2			DRAWING No
3			14-038
4			
5			SHEET
6			12 OF 18

END INSTALLATION INTO CONCRETE OR CONCRETE BLOCK WALL ◆

SCALE 3/8"=1"

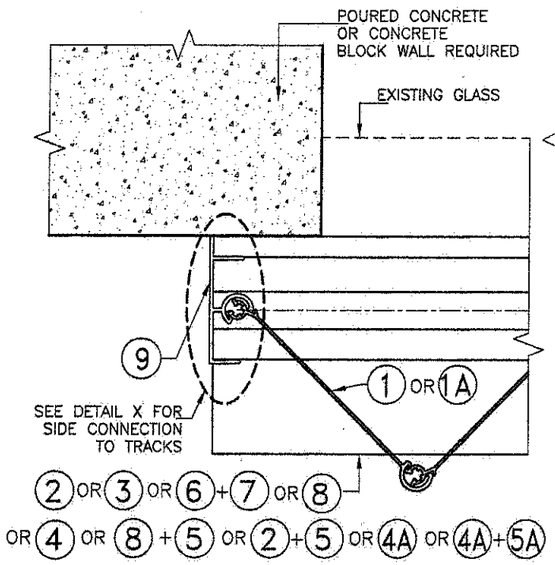

① END CONNECTION DETAIL

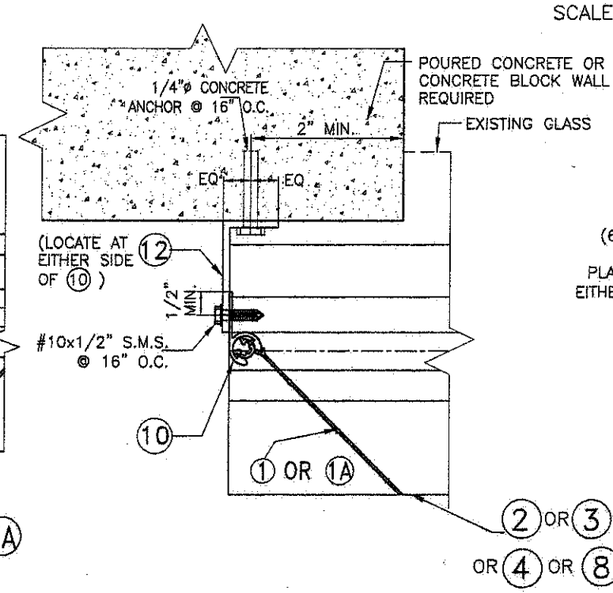

② END CONNECTION DETAIL

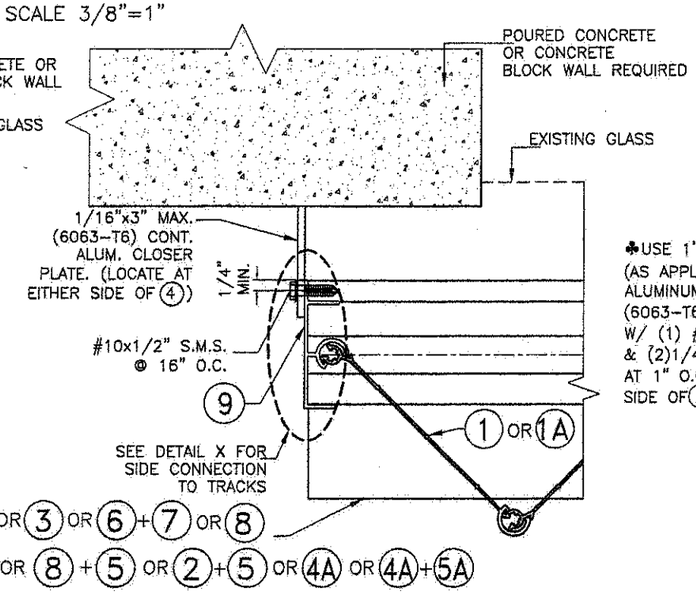

③ END CONNECTION DETAIL

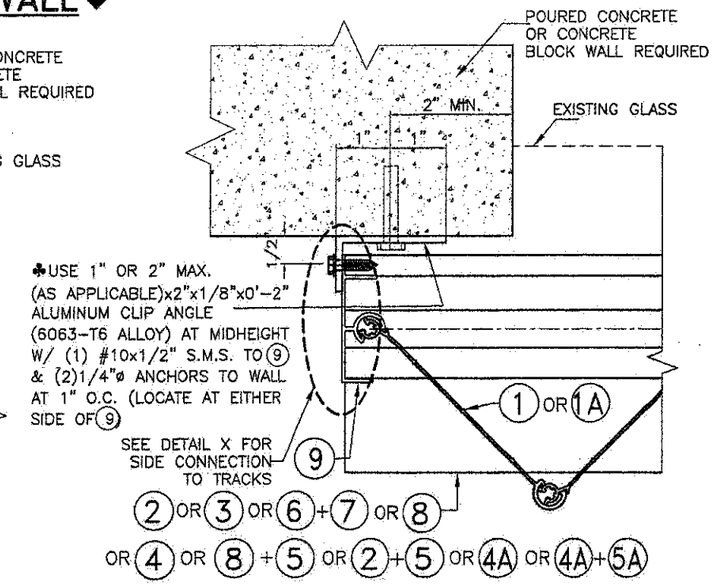

④ END CONNECTION DETAIL

♣ REQUIRED ONLY FOR SPANS GREATER THAN 12'-0"

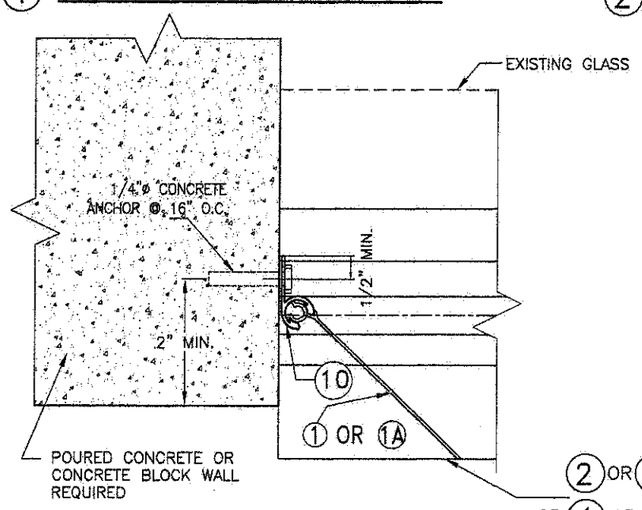

⑤ END CONNECTION DETAIL

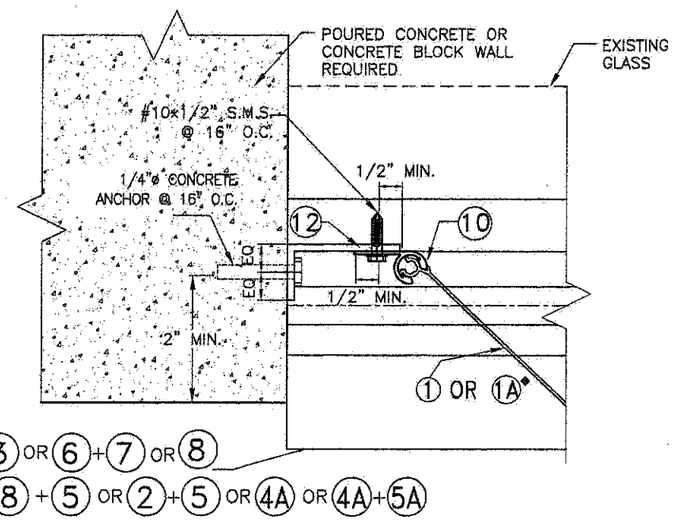

⑥ END CONNECTION DETAIL

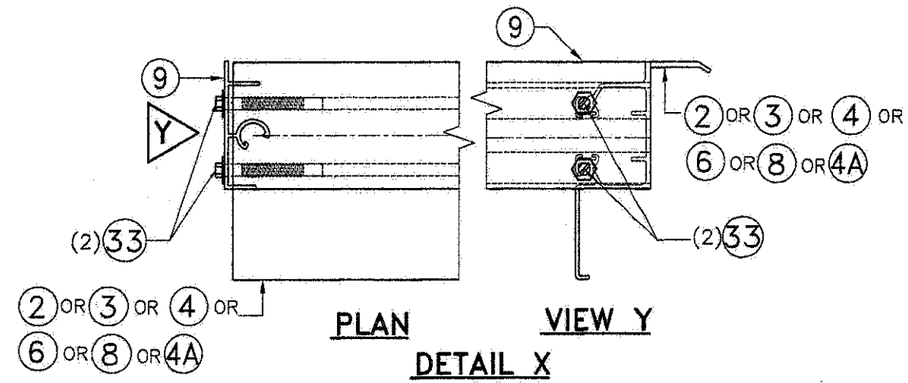

PLAN

VIEW Y

DETAIL X

◆ SEE LIMITATIONS OF USE FOR BLADE 1A ON SHEET 18.

TEXAS DEPARTMENT OF INSURANCE – 2006

P.E. SEAL/SIGNATURE/DATE

5/12/14

WALTER A. TILLIT Jr. P.E.
PROFESSIONAL ENGINEER

6355 N.W. 36TH. ST., STE. 305
VIRGINIA GARDENS, FL 33166
PHONE : (305) 871-1530 , FAX : (305) 871-1531

TEXAS LIC. # 90691
FIRM REGISTRATION # F-13790

A.S.S.A.
American Shutter Systems Association, Inc.
4268 Westroads Drive
West Palm Beach, FL 33407

© 2014 EASTERN METAL SUPPLY, INC.

BERTHA HV™
Accordion Shutter System
H.V. BLADE #3 W/ OR W/O H.V. WINDOW BLADE #3

REV. No	DESCRIPTION	DATE	DRAWN BY: A.G.
1	OLD 13-032	05/06/14	DATE: 04/02/13
2			DRAWING No
3			14-038
4			
5			SHEET
6			13 OF 18

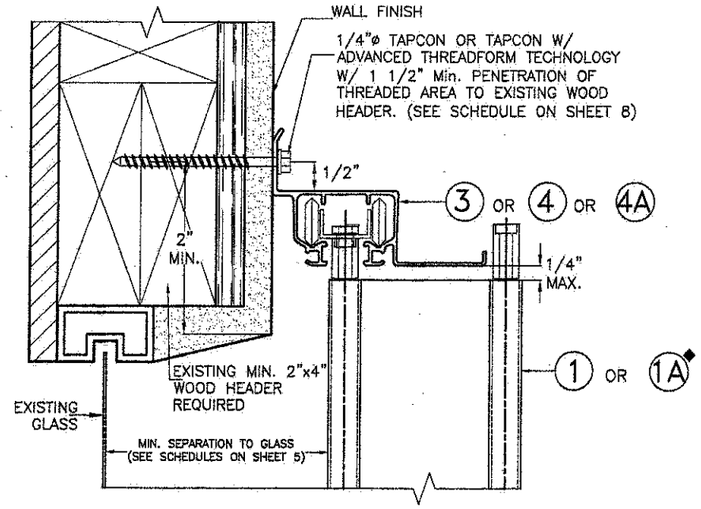

1W WALL CONNECTION AT TOP

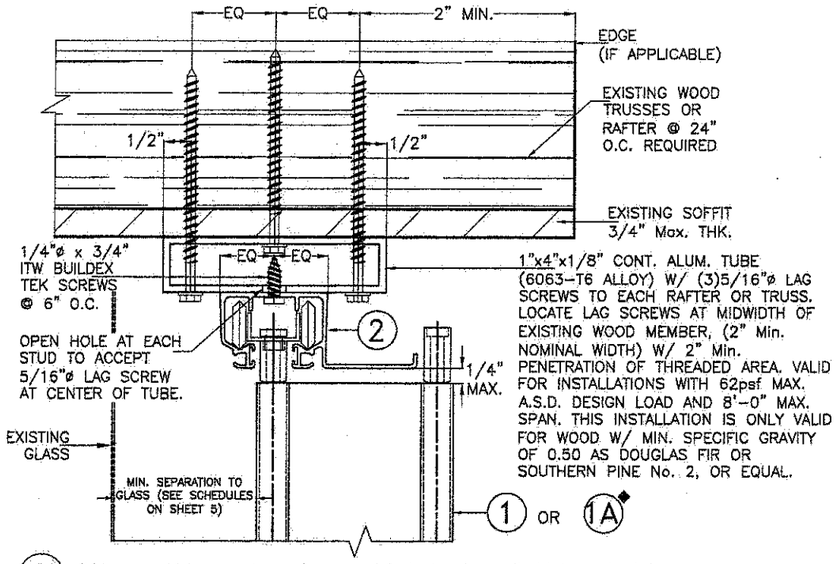

2W HOLLOW CEILING MOUNTING INSTALLATION

MAXIMUM DESIGN PRESSURE: ±62 psf
MAXIMUM SHUTTER SPAN 8'-0"

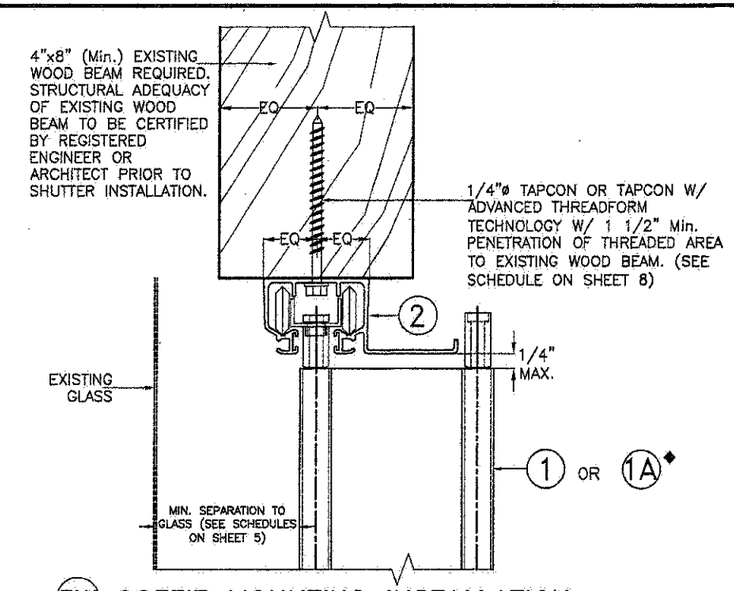

3W SOFFIT MOUNTING INSTALLATION

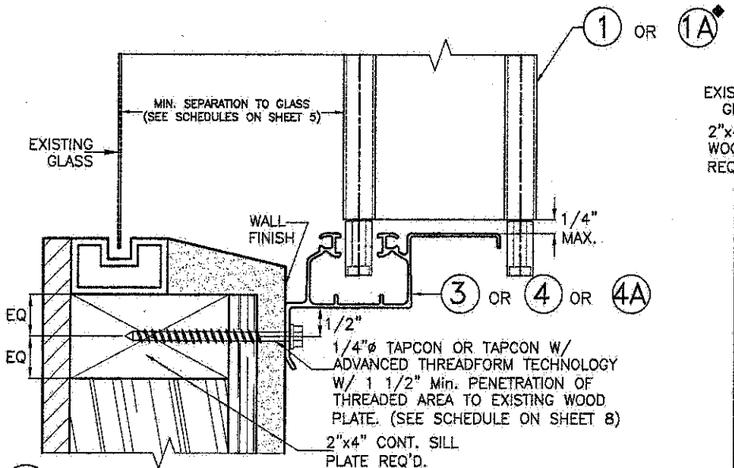

4W WALL CONNECTION AT BOTTOM

NOTE:
1-SEE SHEET 3 FOR TYPICAL SHUTTER ASSEMBLY

2-MOUNTING SECTIONS CAN BE COMBINED IN ANY WAY TO SUIT ANY INSTALLATION.

◆SEE LIMITATIONS OF USE FOR BLADE 1A ON SHEET 18.

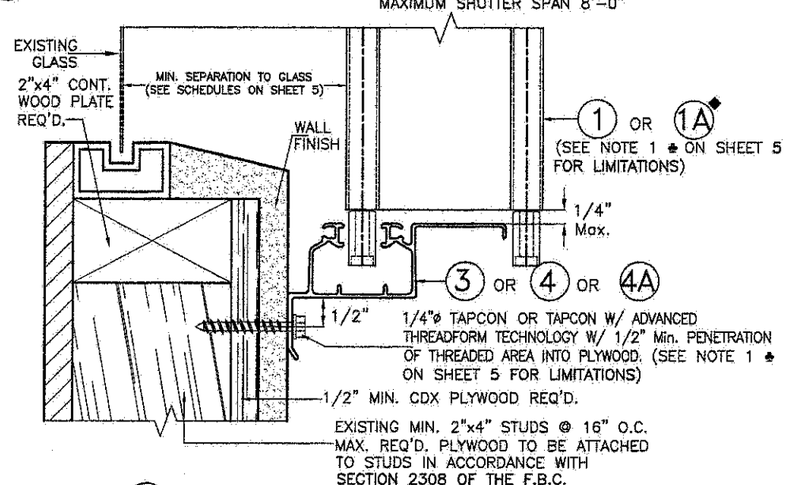

5W WALL CONNECTION AT BOTTOM

MAXIMUM DESIGN PRESSURE: ±62 psf
MAXIMUM SHUTTER SPAN 8'-11"

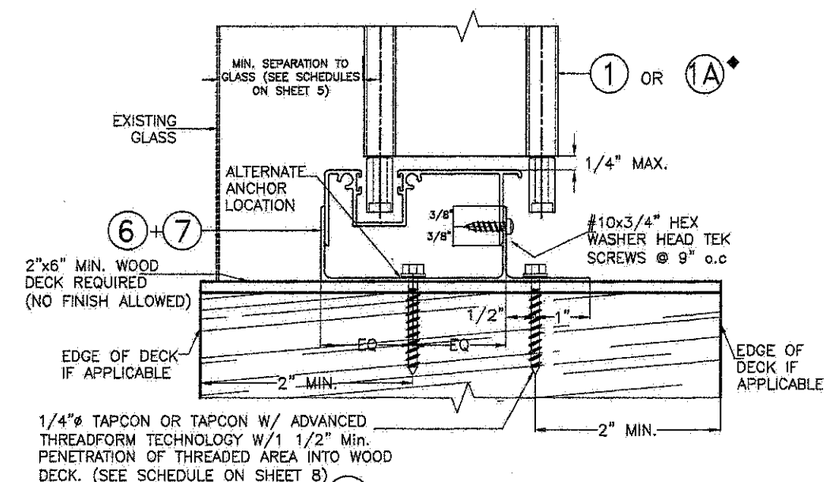

6W FLOOR CONNECTION

INSTALLATION DETAILS ON EXISTING WOOD BUILDINGS

SCALE 3/8"=1"

TEXAS DEPARTMENT OF INSURANCE - 2006

P.E. SEAL/SIGNATURE/DATE

WALTER A. TILLIT Jr. P.E.
PROFESSIONAL ENGINEER

6355 N.W. 36TH. ST., STE. 305
VIRGINIA GARDENS, FL 33166
PHONE : (305) 871-1530 , FAX : (305) 871-1531

TEXAS LIC. # 90691
FIRM REGISTRATION # F-13790

A.S.S.A.
American Shutter Systems Association, Inc.
4268 Westroads Drive
West Palm Beach, FL 33407

© 2014 EASTERN METAL SUPPLY, INC.

BERTHA HV™
Accordion Shutter System
H.V. BLADE #3 W/ OR W/O H.V. WINDOW BLADE #3

REV. No	DESCRIPTION	DATE	DRAWN BY: A.G.
1	OLD 13-032	05/06/14	DATE: 04/02/13
2			DRAWING No
3			14-038
4			
5			SHEET
6			14 OF 18

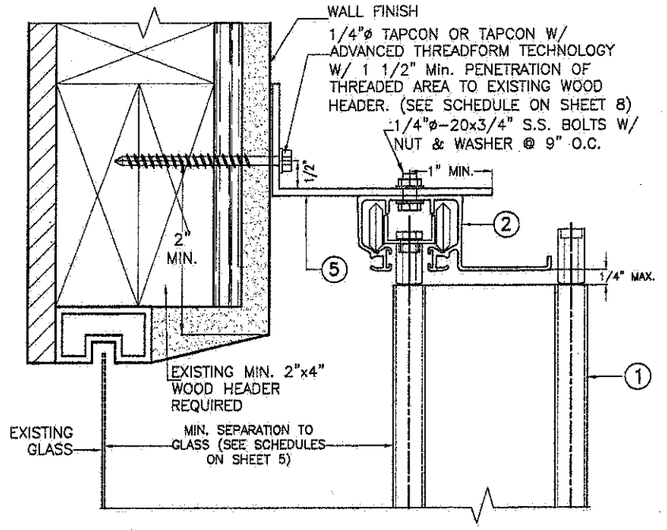

7W WALL MOUNTING INSTALLATION

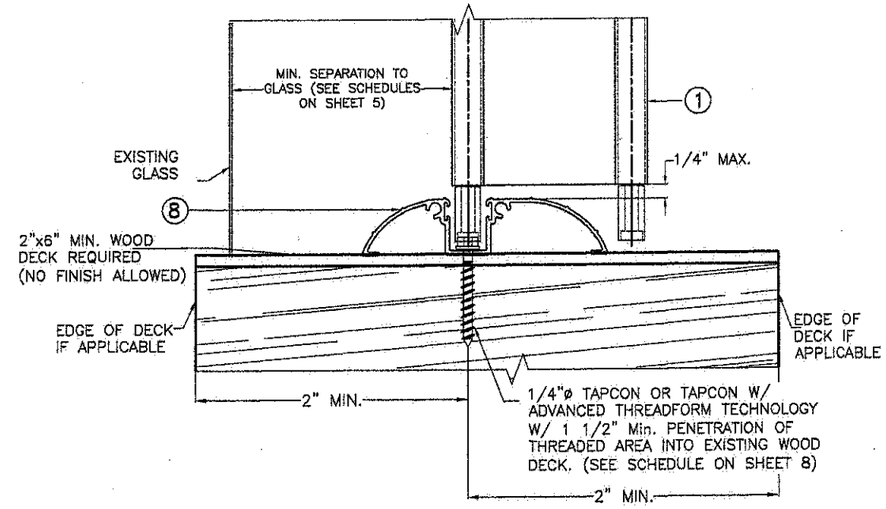

8W FLOOR CONNECTION

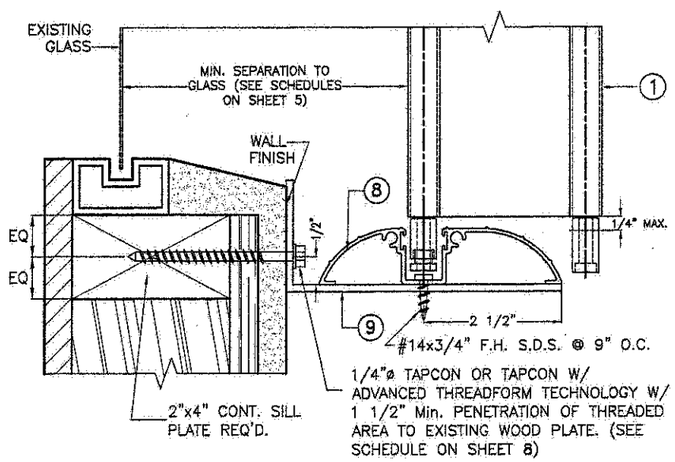

9W WALL MOUNTING INSTALLATION

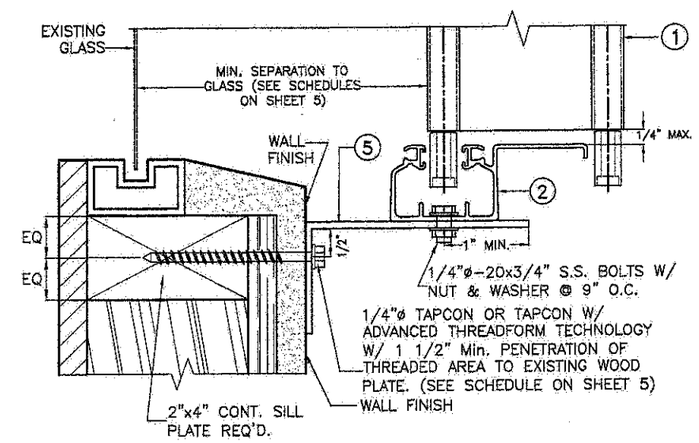

10W WALL MOUNTING INSTALLATION

NOTE:
1-SEE SHEET 3 FOR TYPICAL SHUTTER ASSEMBLY

2-MOUNTING SECTIONS CAN BE COMBINED IN ANY WAY TO SUIT ANY INSTALLATION.

INSTALLATION DETAILS ON EXISTING WOOD BUILDINGS

SCALE 3/8"=1"

TEXAS DEPARTMENT OF INSURANCE – 2006

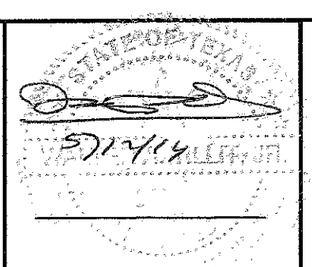

P.E. SEAL/SIGNATURE/DATE

WALTER A. TILLIT Jr. P.E.
PROFESSIONAL ENGINEER

6355 N.W. 36TH. ST., STE. 305
VIRGINIA GARDENS, FL. 33166
PHONE : (305) 871-1530 , FAX : (305) 871-1531

TEXAS LIC. # 90691
FIRM REGISTRATION # F-13790

A.S.S.A.
American Shutter Systems Association, Inc.
4268 Westroads Drive
West Palm Beach, FL 33407

© 2014 EASTERN METAL SUPPLY, INC.

BERTHA HV™
Accordion Shutter System
H.V. BLADE #3 W/ OR W/O H.V. WINDOW BLADE #3

REV. No	DESCRIPTION	DATE	DRAWN BY: A.G.
1	OLD 13-032	05/06/14	DATE: 04/02/13
2			DRAWING No
3			14-038
4			
5			SHEET
6			15 OF 18

END INSTALLATION INTO 2"x4" MIN. WOOD STUDS ◆

SCALE 3/8"=1"

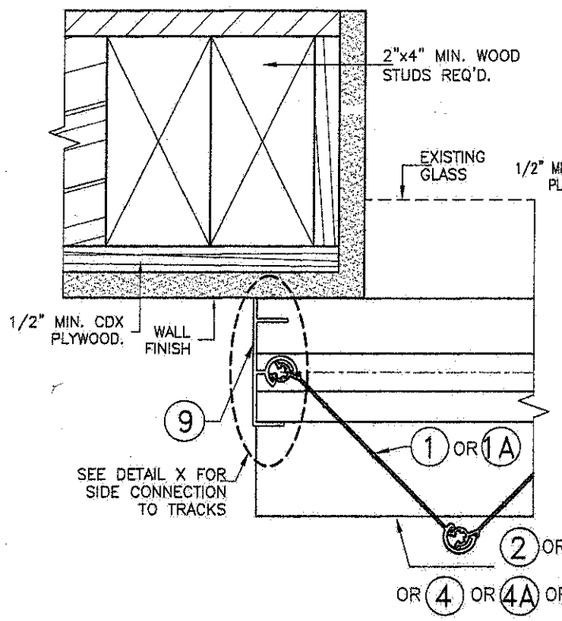

1 END CONNECTION DETAIL

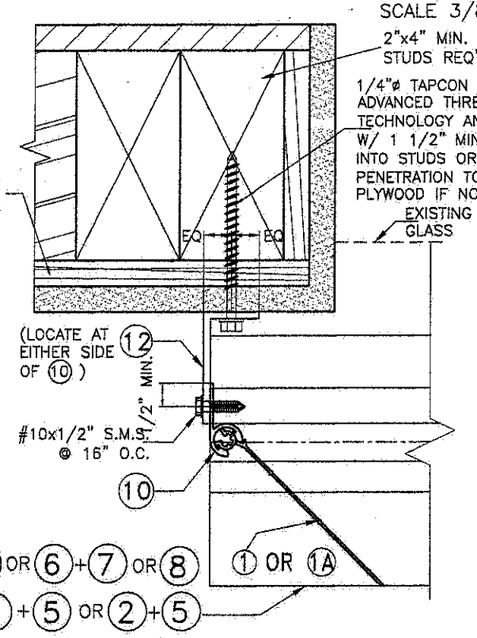

2 END CONNECTION DETAIL

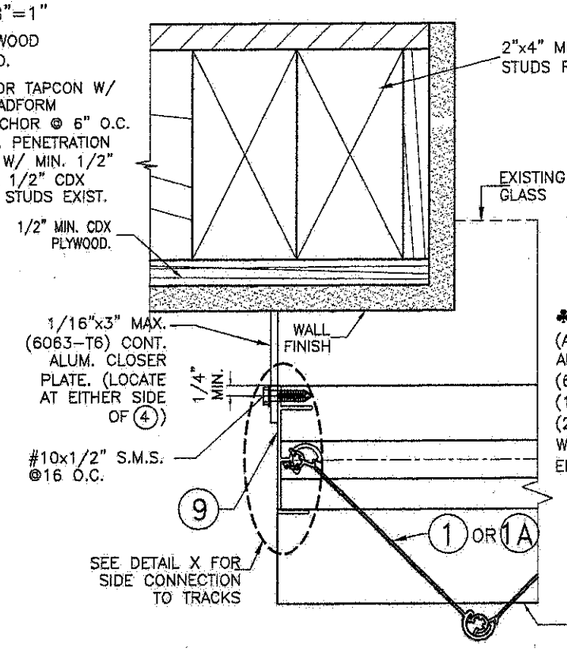

3 END CONNECTION DETAIL

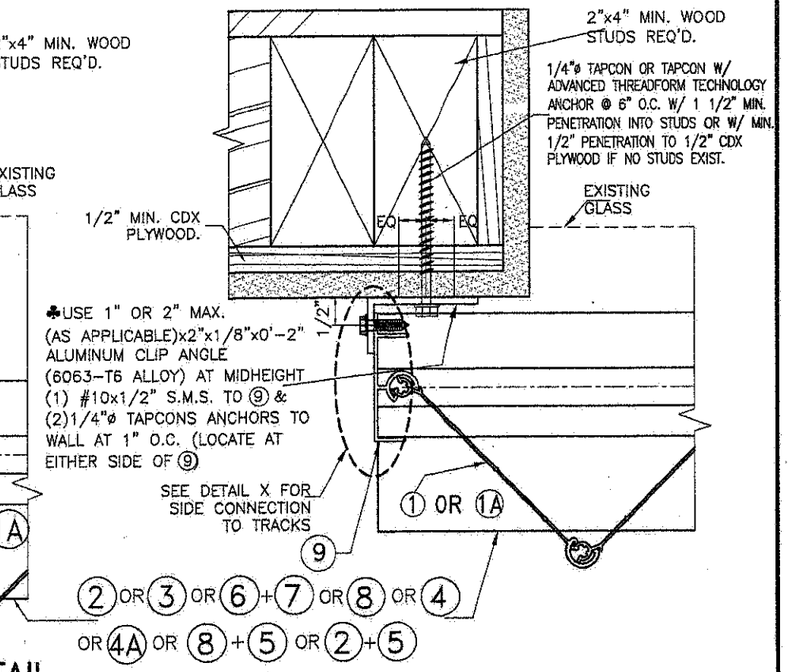

4 END CONNECTION DETAIL

♣ REQUIRED ONLY FOR SPANS GREATER THAN 12'-0"

◆ SEE LIMITATIONS OF USE FOR BLADE 1A ON SHEET 18.

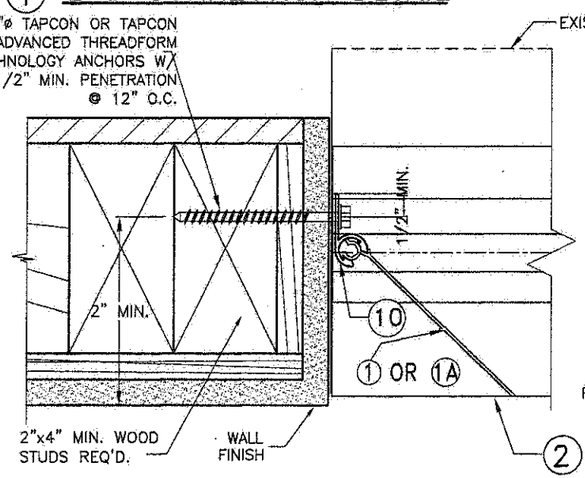

5 END CONNECTION DETAIL

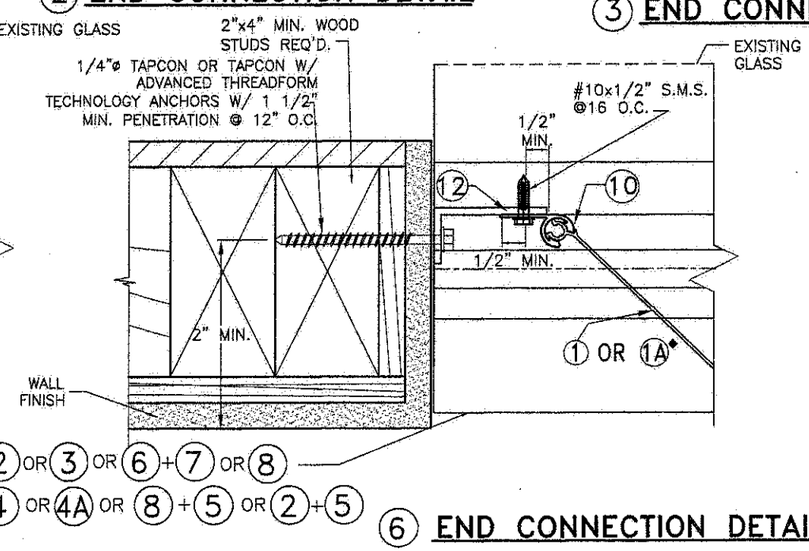

6 END CONNECTION DETAIL

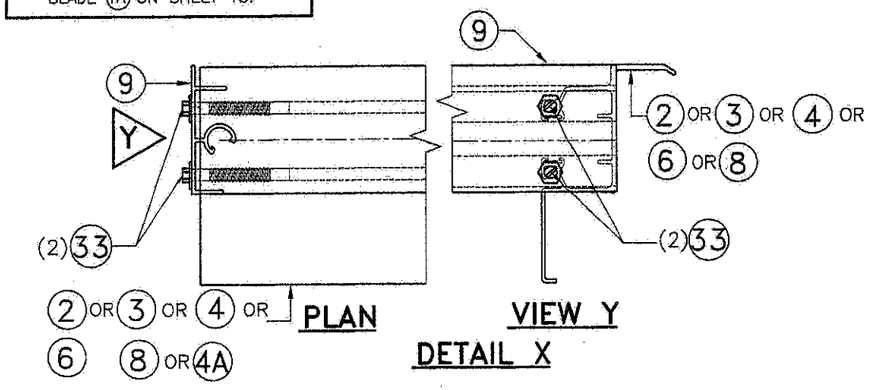

TEXAS DEPARTMENT OF INSURANCE – 2006

P.E. SEAL/SIGNATURE/DATE

5/12/14

WALTER A. TILLIT Jr. P.E.
PROFESSIONAL ENGINEER

6355 N.W. 36TH. ST., STE. 305
VIRGINIA GARDENS, FL. 33166
PHONE : (305) 871-1530 , FAX : (305) 871-1531

TEXAS LIC. # 90691
FIRM REGISTRATION # F-13790

A.S.S.A.
American Shutter Systems Association, Inc.
4268 Westroads Drive
West Palm Beach, FL 33407

© 2014 EASTERN METAL SUPPLY, INC.

BERTHA HV™
Accordion Shutter System
H.V. BLADE #3 W/ OR W/O H.V. WINDOW BLADE #3

REV. No	DESCRIPTION	DATE	DRAWN BY: A.G.
1	OLD 13-032	05/06/14	DATE: 04/02/13
2			DRAWING No
3			14-038
4			
5			SHEET
6			16 OF 18

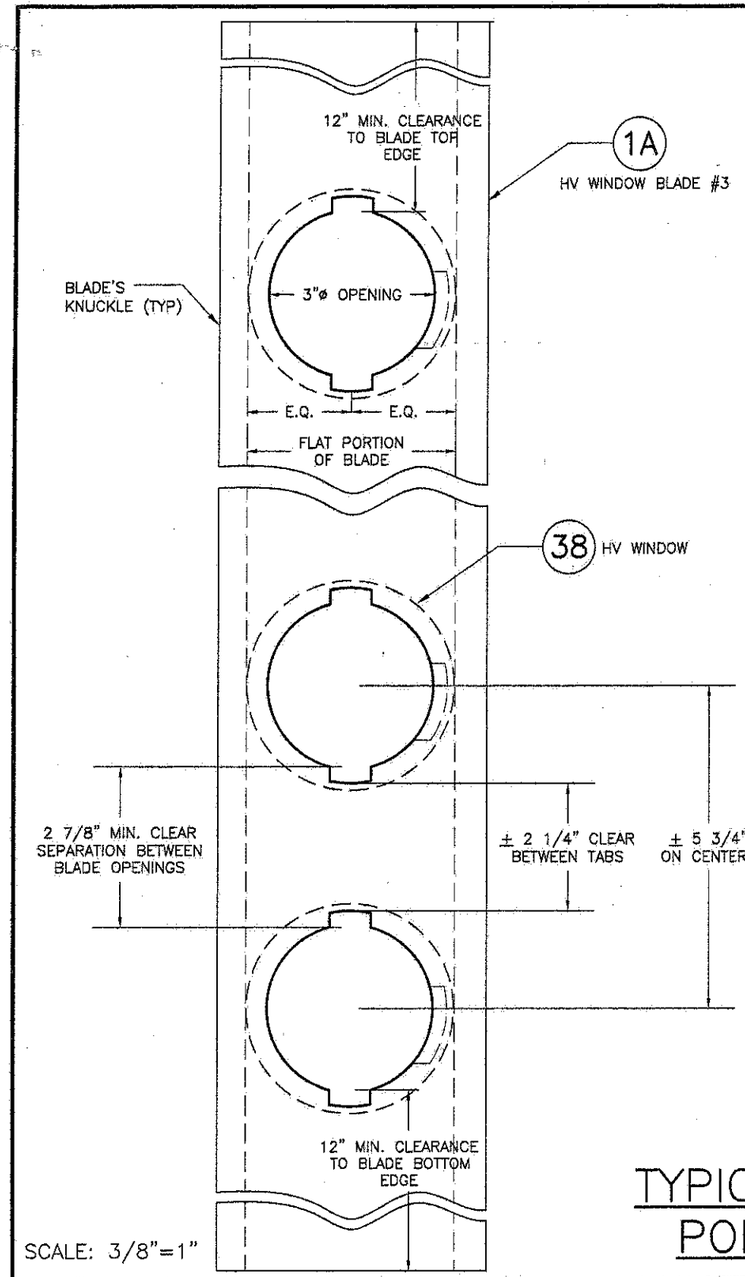

SCALE: 3/8"=1"

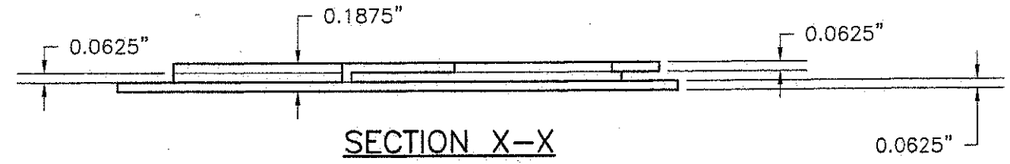

SECTION X–X

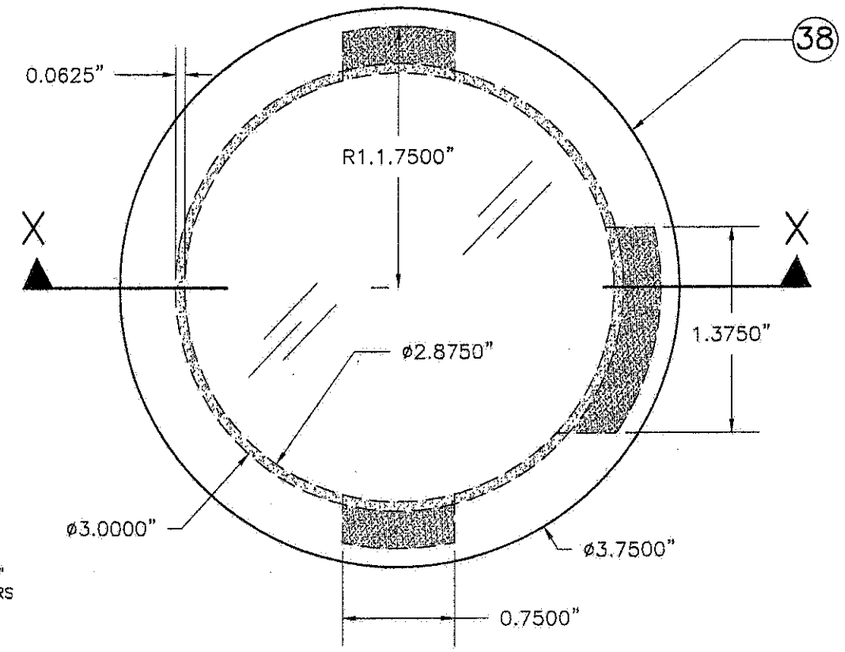

38 POLYCARBONATE IMPACT RESISTANT HV WINDOW

BAYER MAKROLON 3103 POLYCARBONATE RESINS, UV–STABILIZED GRADE

EXTERIOR ELEVATION

SCALE: 1" = 1"

POLYCARBONATE SOURCES FOR 38			
TYPICAL PROPERTIES	APPLICABLE STANDARD REFERENCE	RESULT	
		BAYER MATERIAL/SCIENCE LLC. MAKROLON 3103	SABIC INNOVATIVE PLASTIC LEXAN 103 RESIN
PHYSICAL:			
SPECIFIC GRAVITY	ASTM D792	0.043 lb/in³	0.043 lb/in³
MECHANICAL:			
TENSILE YIELD STRENGTH	ASTM D638	9,400 p.s.i.	9,500 p.s.i.
FLEXURAL STRENGTH AT YIELD	ASTM D790	12,500 p.s.i.	13,400 p.s.i.
FLEXURAL MODULUS	ASTM D790	340,000 p.s.i.	345,000 p.s.i.
IMPACT:			
NOTCHED IZOD	ASTM D256	18 FT–lb/in	17 FT–lb/in
FIRE BURNING CHARACTERISTICS:			
SMOKE DENSITY	ASTM D2843	47.2 %	64.5 % MAX.
RATE OF BURNING	ASTM D635	C–1 CLASS	C–1 CLASS
SELF IGNITION	ASTM D1929	1040 °F	980 °F
WEATHERING:	ASTM G155		
TENSILE STRENGTH AFTER WEATHERING	ASTM 638	9302 p.s.i.	8840 p.s.i.
~~TENSILE STRESS BEFORE WEATHERING~~	~~ASTM 638~~	~~8461 p.s.i.~~	~~8880 p.s.i.~~

TYPICAL 1A HV WINDOW BLADE #3 AND POLYCARBONATE HV WINDOW DETAIL

TEXAS DEPARTMENT OF INSURANCE – 2006

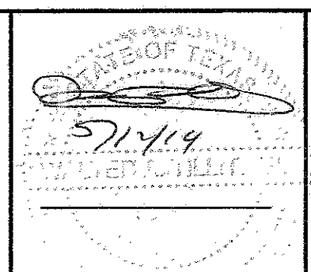

P.E. SEAL/SIGNATURE/DATE

WALTER A. TILLIT Jr. P.E.
PROFESSIONAL ENGINEER

6355 N.W. 36TH. ST., STE. 305
VIRGINIA GARDENS, FL. 33166
PHONE : (305) 871–1530 , FAX : (305) 871–1531

TEXAS LIC. # 90691
FIRM REGISTRATION # F–13790

A.S.S.A.
American Shutter Systems Association, Inc.
4268 Westroads Drive
West Palm Beach, FL 33407

© 2014 EASTERN METAL SUPPLY, INC.

BERTHA HV™
Accordion Shutter System
H.V. BLADE #3 W/ OR W/O H.V. WINDOW BLADE #3

REV. No	DESCRIPTION	DATE	DRAWN BY: A.G.
1	OLD 13–032	05/06/14	DATE: 04/02/13
2			DRAWING No
3			14–038
4			
5			SHEET
6			17 OF 18

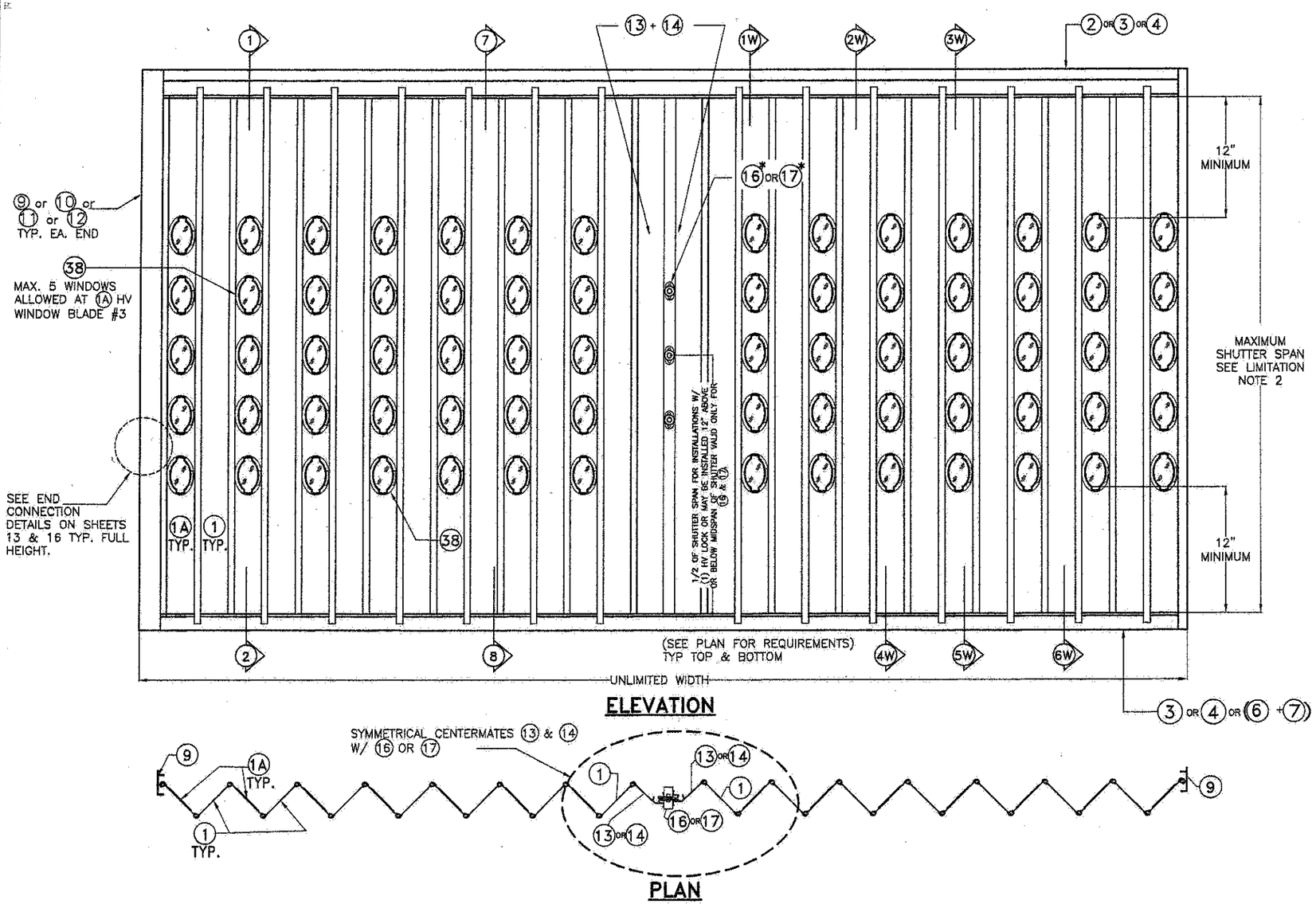

ELEVATION

PLAN

1 TYPICAL HV BLADE #3 WORKING IN UNISON WITH 1A HV WINDOW BLADE #3 SHUTTER*

N.T.S.

* GENERAL LIMITATIONS AND CONDITIONS OF USE FOR BERTHA 1 HV BLADE #3 ACCORDION SHUTTER SYSTEM WORKING IN UNISON WITH 1A HV WINDOW BLADE #3.

1. MAX. A.S.D. DESIGN PRESSURE RATING: +62, −62 p.s.f.

2. MAX. SHUTTER SPAN: 107" = 8'−11" @ +62, −62 psf
   MAX. SHUTTER SPAN: 114" = 9'−6" @ +55, −55 psf

3. ALLOWED MOUNTINGS: 1, 2, 7 & 8 ON SHEETS 9 & 10; AS WELL AS MOUNTINGS 1W, 2W, 3W, 4W, 5W & 6W ON SHEET 14.

4. ONLY CENTERMATES 13, 14 (BOTH W/ 16 OR 17) ARE ALLOWED WITH 13, 14 ARRANGED IN A SYMMETRICAL LAYOUT.

5. (A) 1A HV WINDOW BLADE #3 SHALL ONLY ALLOW A MAXIMUM OF 5 OPENINGS (3"ø HOLES) FOR 38 PER BLADE AT SPACINGS SHOWN ON SHEET 17.

   (B) MIN. CLEARANCE FROM TOP OR BOTTOM EDGE OF 1A HV WINDOW BLADE #3 OF ANY 3"ø HOLE FOR 38 SHALL BE 12".

   (C) FIRST OR LAST BLADE COMING OUT FROM STARTERS AT ENDS MAY BE 1A HV WINDOW BLADE #3.

   (D) 1A HV WINDOW BLADE #3 MUST BE USED ALTERNATE TO A SOLID 1 HV BLADE #3 THROUGHOUT SHUTTER'S WIDTH.

   (E) CENTERMATES SHALL ALWAYS BE INSTALLED ADJACENT TO A SOLID 1 HV BLADE #3 AT EITHER SIDE OF THEM.

   (F) POLYCARBONATE HV WINDOW 38 SHALL BE INSTALLED SO THAT TABS FACE THE INTERIOR OF THE OPENING BEING PROTECTED. HV WINDOW 38 MUST BE ONLY INSTALLED AND LOCKED USING A HV SETTING TOOL PROVIDED BY ASSA, INC.

6. SEE ANCHOR SPACING SCHEDULE FOR INSTALLATIONS INTO WOOD FRAME BUILDINGS ON SHEET 8, AS LIMITED BY SPAN AND DESIGN LOAD (SEE NOTES 1 & 2 ABOVE).

7. SEE ANCHOR SPACING SCHEDULE FOR INSTALLATIONS INTO POURED CONCRETE OR CONCRETE BLOCK WALL ON SHEETS 6 & 7 AS LIMITED BY SPAN AND DESIGN LOAD (SEE NOTES 1 & 2 ABOVE).

8. SEE MINIMUM SEPARATION TO GLASS ON SHEET 5.

TEXAS DEPARTMENT OF INSURANCE – 2006

STATE OF TEXAS
5/12/14
WALTER A. TILLIT, JR.

P.E. SEAL/SIGNATURE/DATE

WALTER A. TILLIT Jr. P.E.
PROFESSIONAL ENGINEER

6355 N.W. 36TH. ST., STE. 305
VIRGINIA GARDENS, FL. 33166
PHONE : (305) 871-1530 , FAX : (305) 871-1531

TEXAS LIC. # 90691
FIRM REGISTRATION # F-13790

A.S.S.A.
American Shutter Systems Association, Inc.
4268 Westroads Drive
West Palm Beach, FL 33407

© 2014 EASTERN METAL SUPPLY, INC.

BERTHA HV™
Accordion Shutter System
H.V. BLADE #3 W/ OR W/O H.V. WINDOW BLADE #3

REV. No	DESCRIPTION	DATE
1	OLD 13-032	05/06/14
2		
3		
4		
5		
6		

DRAWN BY: A.G.
DATE: 04/02/13
DRAWING No **14-038**
SHEET **18 OF 18**