ACCORDION SHUTTER
WITH ALUMINUM OR POLYCARBONATE BLADES

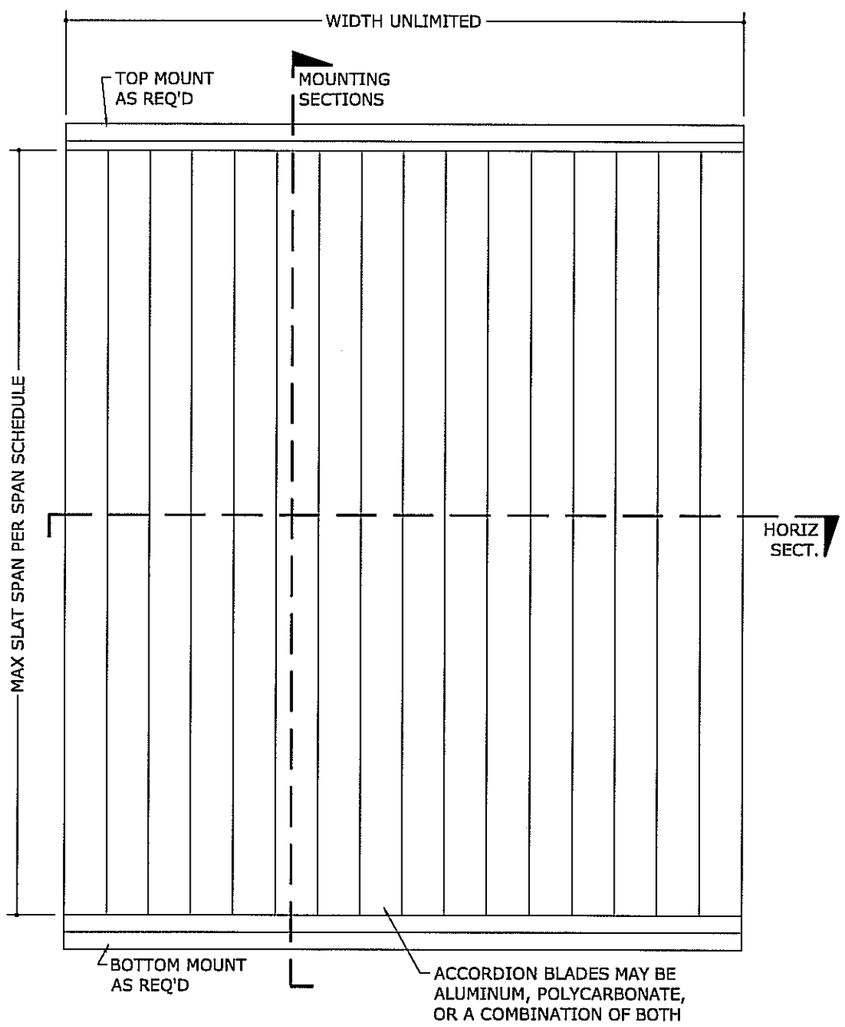

1 / 1 TYPICAL ELEVATION
N.T.S. EXTERIOR ELEV

ALLOWABLE SPAN SCHEDULE

SLAT SPAN	MAXIMUM ALLOWABLE DESIGN PRESSURES		
	ALUMINUM BLADES ONLY	WINDOW BLADES OR ALUMINUM/ WINDOW BLADE COMBINATION*	SHUTTER WITH ALUMINUM BLADES AND ONE SINGLE WINDOW BLADE**
72"	± 152.5 PSF		
90"	± 117.8 PSF		
108"	± 100.5 PSF	± 93.6 PSF	
126"	± 76.2 PSF		
144"	± 62.4 PSF		± 62.4 PSF

SPAN SCHEDULE NOTES:

1. PRESSURES SHOWN IN "ALLOWABLE SPAN SCHEDULE" ARE MAXIMUM ALLOWABLE DESIGN PRESSURES AT EACH RESPECTIVE SHUTTER SPAN.
2. * APPLICABLE FOR INSTALLATIONS UTILIZING ONE OR MORE WINDOW BLADES.
3. ** ONLY APPLICABLE FOR INSTALLATIONS WITH ONE SINGLE WINDOW BLADE SLAT, AND THE REMAINDER OF BLADES ALUMINUM.

MINIMUM GLASS SEPARATION

SPAN LESS THAN:	ALUMINUM BLADES ONLY		WINDOW BLADES OR ALUMINUM/ WINDOW BLADE COMBINATION*		SHUTTER WITH ALUMINUM BLADES AND ONE SINGLE WINDOW BLADE**	
	INSTALLATIONS 30' ABOVE GRADE OR LESS	INSTALLATIONS MORE THAN 30' ABOVE GRADE	INSTALLATIONS 30' ABOVE GRADE OR LESS	INSTALLATIONS MORE THAN 30' ABOVE GRADE	INSTALLATIONS 30' ABOVE GRADE OR LESS	INSTALLATIONS MORE THAN 30' ABOVE GRADE
72"	2.89"	2.89"				
90"	2.89"	2.89"				
108"	2.89"	2.89"	3.28"	2.27"		
126"	4.53"	3.21"				
144"	4.53"	4.03"			4.53"	4.38"

GLASS SEPARATION SCHEDULE NOTES:

1. SEPARATION FROM GLAZING SHALL BE MEASURED FROM THE PROTECTED FENESTRATION PRODUCT TO THE NEAREST POINT ON THE INTERIOR SIDE OF THE SHUTTER, WHICH MAY BE THE BLADE, CENTERMATE, OR LOCKING DEVICE.
2. * APPLICABLE FOR INSTALLATIONS UTILIZING ONE OR MORE WINDOW BLADES.
3. ** ONLY APPLICABLE FOR INSTALLATIONS WITH ONE SINGLE WINDOW BLADE SLAT, AND THE REMAINDER OF BLADES ALUMINUM.
4. FOR INSTALLATIONS WITH A 16" MINIMUM SHUTTER SPAN FOR USE IN ASTM WIND ZONES 1 THROUGH 3, NO MINIMUM SEPARATION FROM GLASS IS REQUIRED.
5. ALL INSTALLATIONS WITHIN WIND ZONE 4 OR WITH A SPAN LESS THAN 16" REQUIRE THE MINIMUM SEPARATION FROM GLASS NOTED ABOVE.

GENERAL NOTES

1. THE SYSTEM DESCRIBED HEREIN HAS BEEN DESIGNED AND TESTED IN ACCORDANCE WITH THE 2006 INTERNATIONAL BUILDING CODE AND INTERNATIONAL RESIDENTIAL CODE WITH TEXAS REVISIONS, EFFECTIVE JANUARY 1, 2008, PER ASTM E 330 / E 1886 / E 1996.
2. THIS ACCORDION SHUTTER SYSTEM MAY BE USED IN THE SEAWARD AND INLAND AREAS AS DEFINED BY THE TEXAS DEPARTMENT OF INSURANCE.
3. NO 33-1/3% INCREASE IN ALLOWABLE STRESS HAS BEEN USED IN THE DESIGN OF THIS SYSTEM. WIND LOAD DURATION FACTOR Cd=1.6 HAS BEEN USED FOR WOOD ANCHOR DESIGN.
4. POSITIVE AND NEGATIVE DESIGN PRESSURES CALCULATED FOR USE WITH THIS SYSTEM SHALL BE DETERMINED BY OTHERS ON A JOB-SPECIFIC BASIS IN ACCORDANCE WITH THE GOVERNING CODE.
5. ALL POLYCARBONATE PANELS SHALL BE EXTRUDED WITH THICKNESS t=0.090" AND SHALL BE FABRICATED FROM 100% SABIC INNOVATIVE PLASTICS THERMOPLASTIC POLYMER LEXAN SHEET #XL10 2UV (UV STABILIZED).
6. THE SYSTEM DETAILED HEREIN IS GENERIC AND DOES NOT PROVIDE INFORMATION FOR A SPECIFIC SITE. FOR SITE CONDITIONS DIFFERENT FROM THE CONDITIONS DETAILED HEREIN, A LICENSED ENGINEER OR REGISTERED ARCHITECT SHALL PREPARE SITE SPECIFIC DOCUMENTS FOR USE IN CONJUNCTION WITH THIS DOCUMENT.
7. PERMIT HOLDER SHALL VERIFY THE ADEQUACY OF THE EXISTING STRUCTURE TO WITHSTAND SUPERIMPOSED LOADS. WOOD BUCKS (BY OTHERS) SHALL BE ANCHORED PROPERLY TO TRANSFER LOADS TO THE EXISTING STRUCTURE.
8. ALL EXTRUSIONS SHALL BE 6063-T6 ALUMINUM ALLOY, UNLESS NOTED OTHERWISE.
9. EACH SHUTTER ASSEMBLY SHALL BE PERMANENTLY LABELED WITH THE FOLLOWING MINIMUM INFORMATION:
   ACCORDION SHUTTER
   IMPACT TECHNOLOGY, INC.
   HIALEAH, FL
   MISSILE LEVEL 'D' - ASTM E1886/E1996/E330
   TDI APPROVED
   THIS IS THE MINIMUM LABEL INFORMATION, ACTUAL PRODUCT LABELS SHALL COMPLY WITH ALL REQUIREMENTS OF THE INTERNATIONAL BUILDING CODE AND INTERNATIONAL RESIDENTIAL CODE WITH TEXAS REVISIONS.
10. TOP & BOTTOM DETAILS SHOWN MAY BE INTERCHANGED AS FIELD CONDITIONS DICTATE.
11. ALL BOLTS & WASHERS SHALL BE ZINC COATED STEEL, GALVANIZED STEEL, OR STAINLESS STEEL WITH A MINIMUM TENSILE YIELD STRENGTH OF 60 KSI. ALL 3/16"Ø OR 1/4"Ø POP RIVETS SHALL BE 5056-H32 ALUMINUM ALLOY OR STRONGER.
12. ALL STEEL IN CONTACT WITH ALUMINUM SHALL BE PAINTED OR PLATED.

FRANK L. BENNARDO, P.E.
PE96064
TX
07/16/2009

FRANK L. BENNARDO, P.E.
160 SW 12th AVENUE, #106
DEERFIELD BEACH, FL 33442
PH: (954) 354-0660 FAX: (954) 354-0443
POWERED BY THE INNOVATIONS OF
ENGINEERING EXPRESS®
EXPERIENCE MORE AT WWW.ENGEXP.COM

IMPACT TECHNOLOGY, INC.
7860 WEST 25TH AVENUE
HIALEAH, FL 33016
PHONE: 305 - 558 - 7739

ACCORDION SHUTTER
WITH ALUMINUM OR POLYCARBONATE BLADES
TEXAS DEPARTMENT OF INSURANCE

REMARKS	DRWN	CHKD	DATE
INIT ISSUE	KL	FLB	07/15/09

09-ITI-0002
SCALE: - 01
PAGE DESCRIPTION:
-
-

10
1

F:\01 Project Files\Impact Technology (ITI)\2009\09-ITI-0002 Accordion Shutter (TDI) - Initial Submittal\09-ITI-0002_01a Alum, Polycarb Accordion Shutter.dwg
07/16/2009 - 5:40pm kelihl

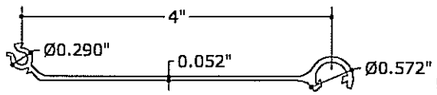

1 ALUMINUM BLADE
N.T.S. 6063-T6

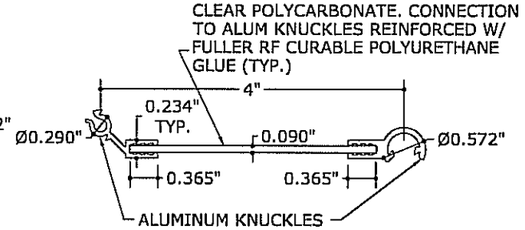

2 WINDOW BLADE
N.T.S. 6063-T6/POLYCARBONATE

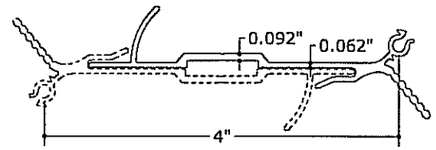

3 HERMAPHRODITIC CENTERMATE
N.T.S. 6063-T6

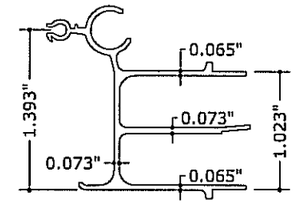

4 MALE CENTERMATE
N.T.S. 6063-T6

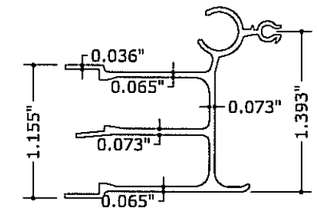

5 FEMALE CENTERMATE
N.T.S. 6063-T6

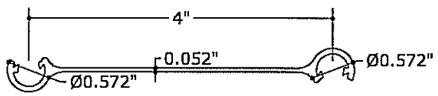

6 BLADE ADAPTER
N.T.S. 6063-T6

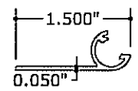

8 FLAT STARTER BLADE
N.T.S. 6063-T6

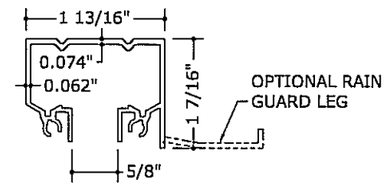

9 CEILING HEADER
N.T.S. 6063-T6

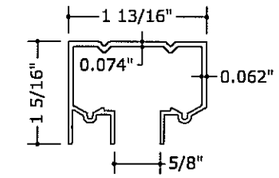

37 ALT. CEILING HEADER
N.T.S. 6063-T6

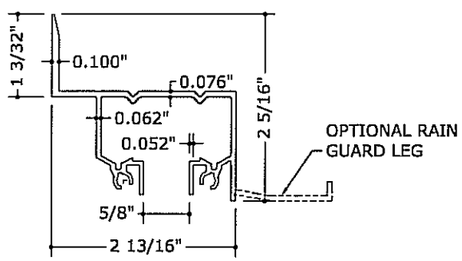

10 WALL HEADER
N.T.S. 6063-T6

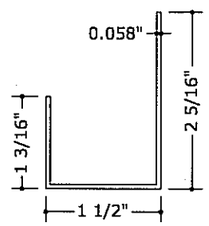

11 ADJUSTABLE SILL TRACK BOTTOM
N.T.S. 6063-T6

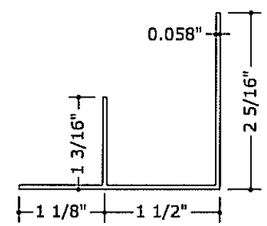

12 ALT. ADJUSTABLE SILL TRACK BOTTOM
N.T.S. 6063-T6

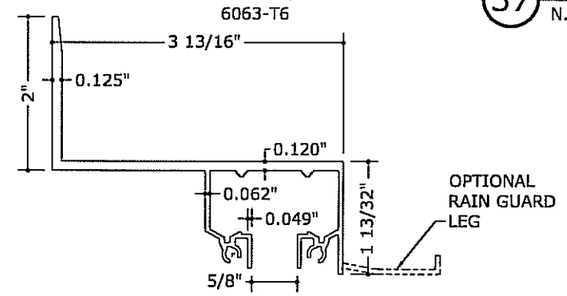

13 BUILD-OUT WALL HEADER
N.T.S. 6063-T6

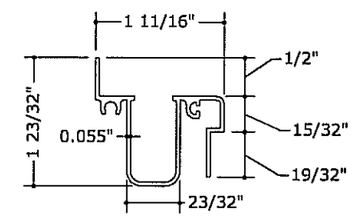

14 ADJUSTABLE SILL TRACK TOP
N.T.S. 6063-T6

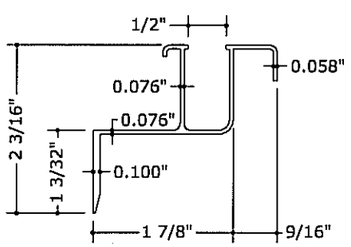

15 WALL SILL TRACK
N.T.S. 6063-T6

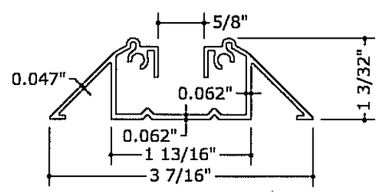

16 WALKOVER TRACK
N.T.S. 6063-T6

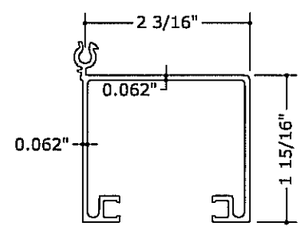

29 HIGH IMPACT CENTERMATE
N.T.S. 6063-T6

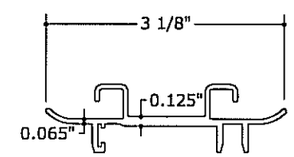

30 HIGH IMPACT CENTERMATE INSERT
N.T.S. 6063-T6

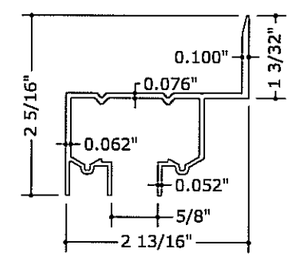

38 ALT. WALL HEADER
N.T.S. 6063-T6

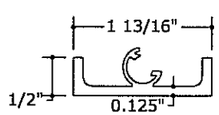

31 CEILING SIDE MOUNT
N.T.S. 6063-T6

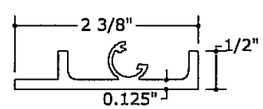

32 HEADER SIDE MOUNT
N.T.S. 6063-T6

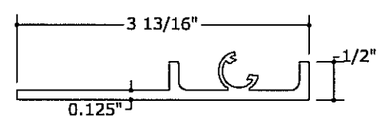

33 BUILD-OUT HEADER SIDE MOUNT
N.T.S. 6063-T6

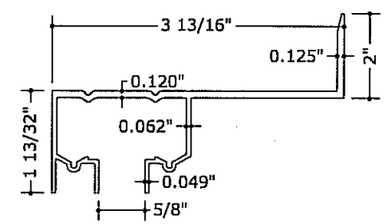

39 ALT. BUILD-OUT WALL HEADER
N.T.S. 6063-T6

FRANK L. BENNARDO, P.E.
PE96064
TX
07/16/2009

FRANK L. BENNARDO, P.E.
160 SW 12th AVENUE, #106
DEERFIELD BEACH, FL 33442
PH: (954) 354-0660 FAX: (954) 354-0443
POWERED BY THE INNOVATIONS OF
ENGINEERING EXPRESS®
EXPERIENCE MORE AT WWW.ENGEXP.COM

IMPACT TECHNOLOGY, INC.
7860 WEST 25TH AVENUE
HIALEAH, FL 33016
PHONE: 305 - 558 - 7739

ACCORDION SHUTTER
WITH ALUMINUM OR POLYCARBONATE BLADES
TEXAS DEPARTMENT OF INSURANCE

REMARKS	DRWN	CHKD	DATE
INIT ISSUE	KL	FLB	07/15/09

09-ITI-0002
SCALE: - 01
PAGE DESCRIPTION:
-
-

10
2

07/16/2009 - 5:40pm kelbhi F:\01 Project Files\Impact Technology (ITI)\2009\09-ITI-0002 Accordion Shutter (TDI) - Initial Submittal\09-ITI-0002_01a Alum. Polycarb Accordion Shutter.dwg

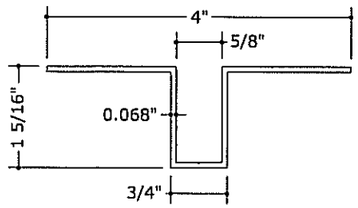

17 RECESSED TRACK
N.T.S. 6063-T5

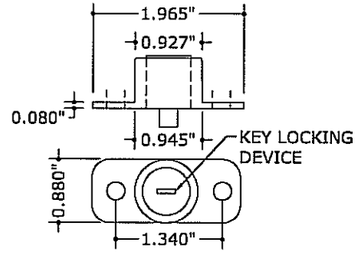

18 PUSH-BUTTON LOCK
N.T.S. 6063-T5

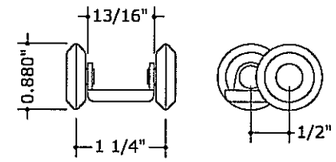

19 WHEEL CARRIAGE
N.T.S. NYLON/STAINLESS STEEL

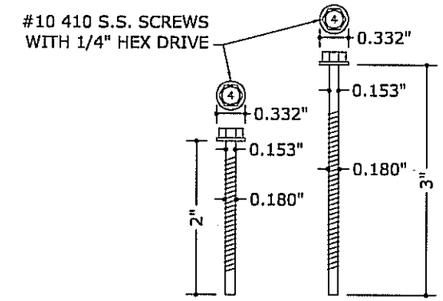

20 KNUCKLE SCREWS
N.T.S. STAINLESS STEEL

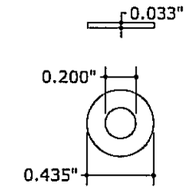

21 WASHER
N.T.S. STAINLESS STEEL

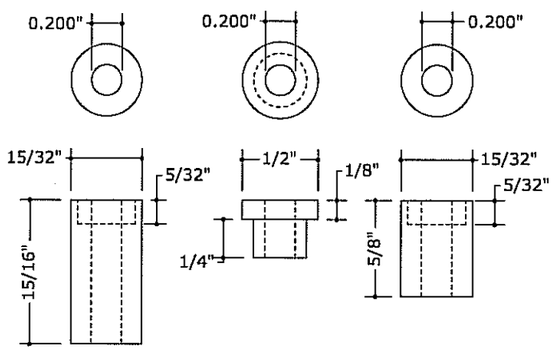

22 NYLON BUSHINGS
N.T.S. NYLON

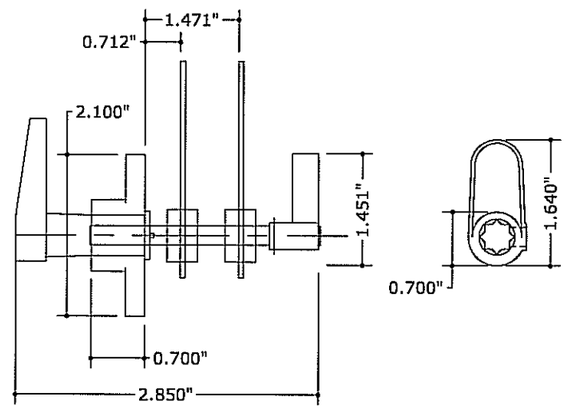

23 LOCK ASSEMBLY
N.T.S. ZINC ALLOY/STAINLESS STEEL

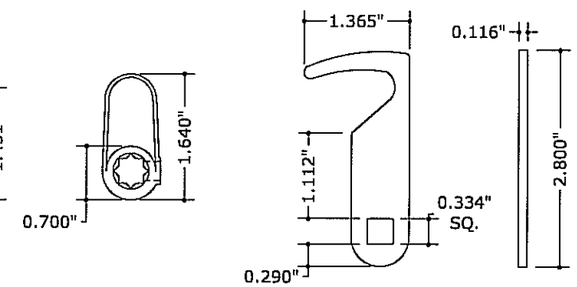

24 LOCKING ARM
N.T.S. 410 STAINLESS STEEL

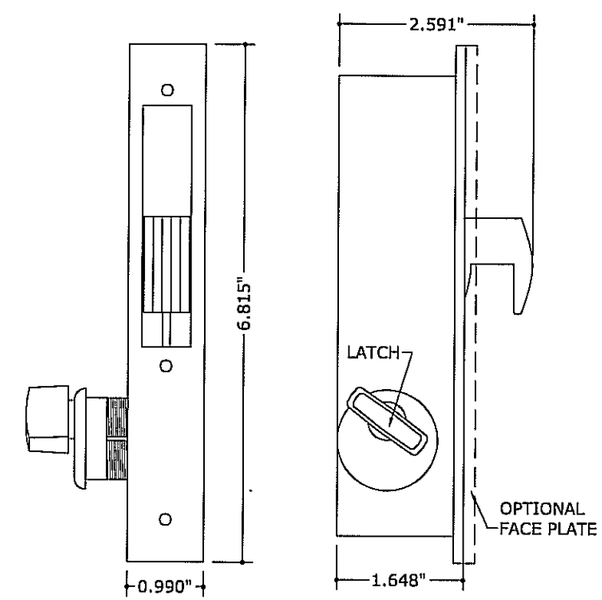

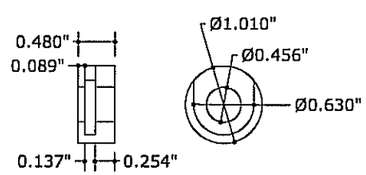

25 LEFT LOCKING ARM BUSHING
N.T.S. NYLON

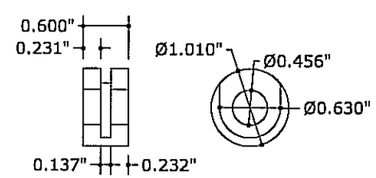

26 RIGHT LOCKING ARM BUSHING
N.T.S. NYLON

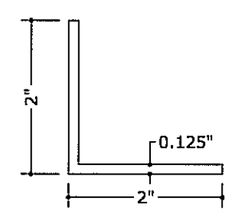

35 2"x2"x0.125" ANGLE
N.T.S. 6063-T6

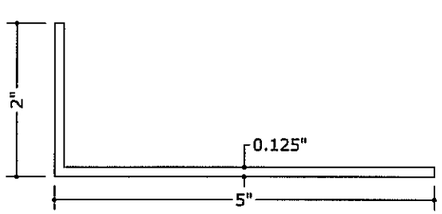

27 2"x5"x0.125" ANGLE
N.T.S. 6063-T6

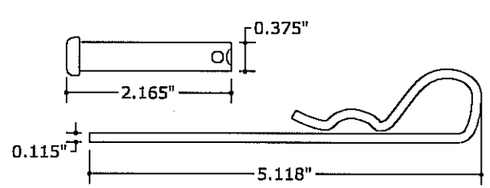

28 CLEVIS AND PIN
N.T.S. CADMIUM PLATED STEEL

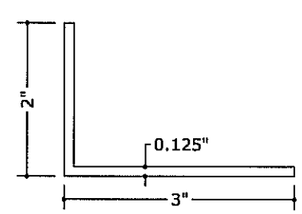

36 2"x3"x0.125" ANGLE
N.T.S. 6063-T6

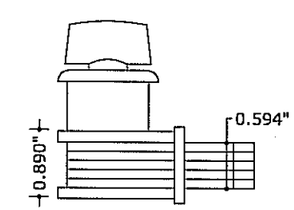

34 HOOK BOLT DEAD LOCK
N.T.S. ALUMINUM

FRANK L. BENNARDO, P.E.
PE96064
TX
07/16/2009

FRANK L. BENNARDO, P.E.
160 SW 12th AVENUE, #106
DEERFIELD BEACH, FL 33442
PH: (954) 354-0660 FAX: (954) 354-0443
POWERED BY THE INNOVATIONS OF
ENGINEERING EXPRESS®
EXPERIENCE MORE AT WWW.ENGEXP.COM

IMPACT TECHNOLOGY, INC.
7860 WEST 25TH AVENUE
HIALEAH, FL 33016
PHONE: 305 - 558 - 7739

ACCORDION SHUTTER
WITH ALUMINUM OR POLYCARBONATE BLADES
TEXAS DEPARTMENT OF INSURANCE

REMARKS	DRWN	CHKD	DATE
INIT ISSUE	KL	FLB	07/15/09

09-ITI-0002
SCALE: - 01
PAGE DESCRIPTION:

10

3

07/16/2009 - 5:40pm keithl F:\01 Project Files\Impact Technology (ITI)\2009\09-ITI-0002 Accordion Shutter (TDI) - Initial Submittal\09-ITI-0002_01a Alum. Polycarb Accordion Shutter.dwg

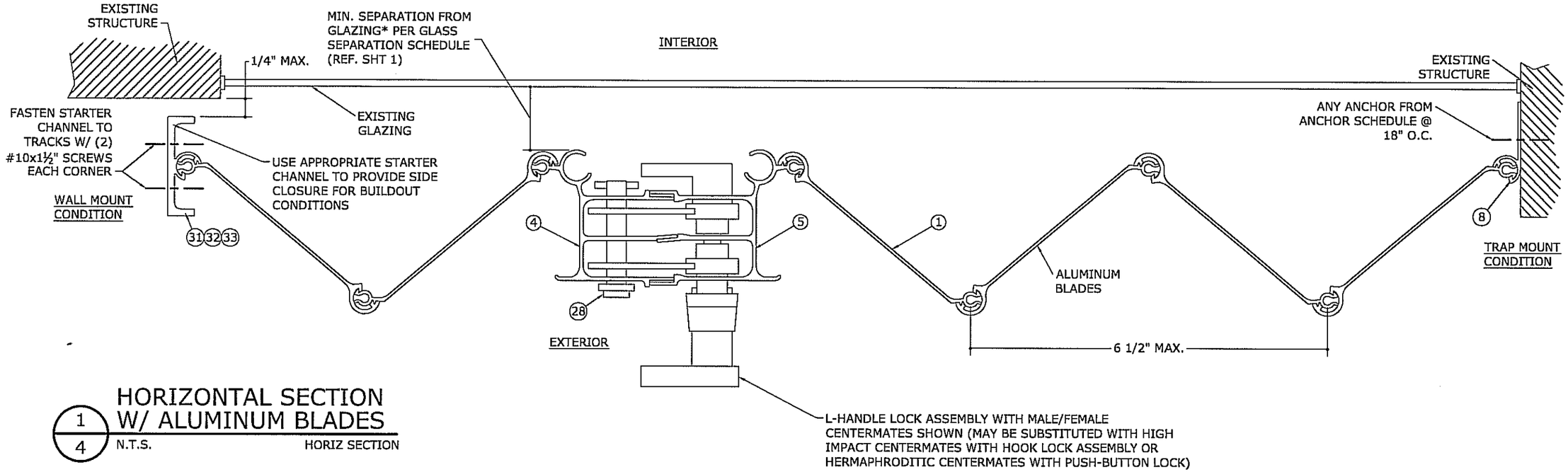

1/4 HORIZONTAL SECTION W/ ALUMINUM BLADES

N.T.S. HORIZ SECTION

***NOTE**: SEPARATION FROM GLAZING SHALL BE MEASURED FROM THE PROTECTED FENESTRATION PRODUCT TO THE NEAREST POINT ON THE INTERIOR SIDE OF THE SHUTTER, WHICH MAY BE THE BLADE, CENTERMATE, OR LOCKING DEVICE.

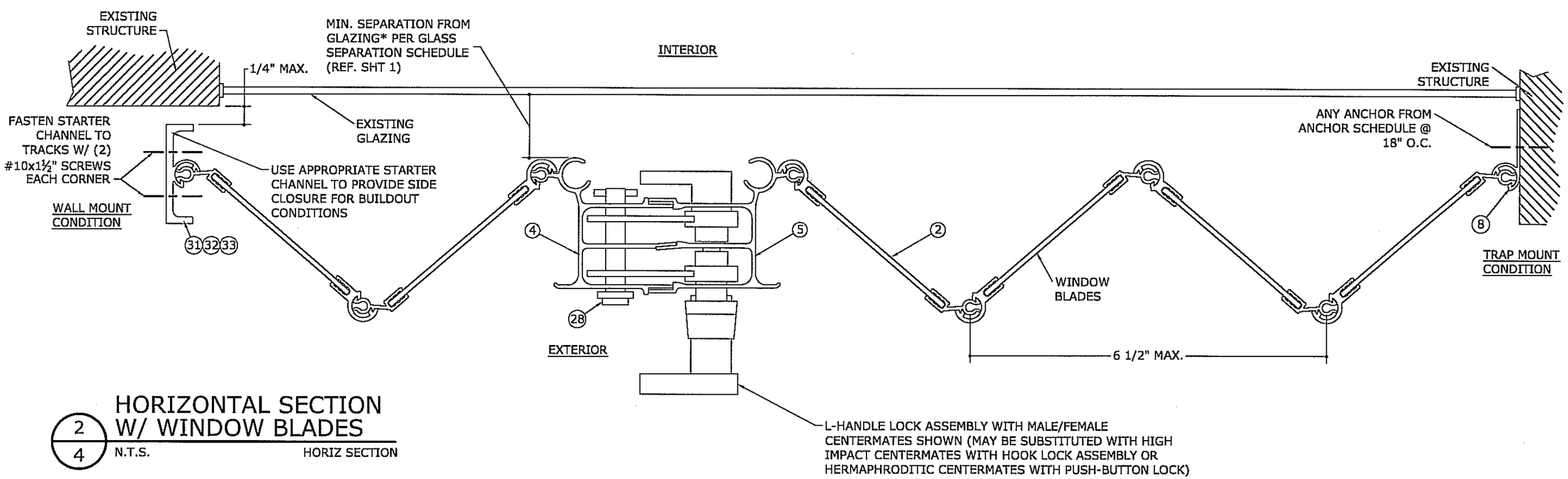

2/4 HORIZONTAL SECTION W/ WINDOW BLADES

N.T.S. HORIZ SECTION

FRANK L. BENNARDO, P.E.
PE96064
TX
07/16/2009

FRANK L. BENNARDO, P.E.
160 SW 12th AVENUE, #106
DEERFIELD BEACH, FL 33442
PH: (954) 354-0660 FAX: (954) 354-0443
POWERED BY THE INNOVATIONS OF
ENGINEERING EXPRESS®
EXPERIENCE MORE AT WWW.ENGEXP.COM

IMPACT TECHNOLOGY, INC.
7860 WEST 25TH AVENUE
HIALEAH, FL 33016
PHONE: 305 - 558 - 7739

ACCORDION SHUTTER
WITH ALUMINUM OR POLYCARBONATE BLADES
TEXAS DEPARTMENT OF INSURANCE

REMARKS	DRWN	CHKD	DATE
INIT ISSUE	KL	FLB	07/15/09

09-ITI-0002

SCALE: - 01

PAGE DESCRIPTION:

10

4

07/16/2009 - 5:40pm kellhl F:\01 Project Files\Impact Technology (ITI)\2009\09-ITI-0002 Accordion Shutter (TDI) - Initial Submittal\09-ITI-0002_01a Alum, Polycarb Accordion Shutter.dwg

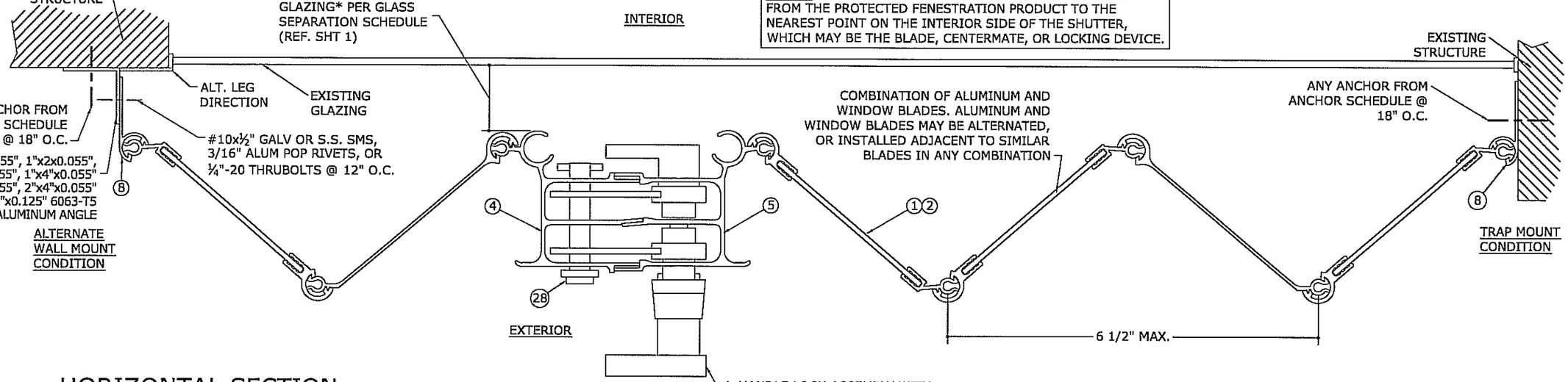

***NOTE**: SEPARATION FROM GLAZING SHALL BE MEASURED FROM THE PROTECTED FENESTRATION PRODUCT TO THE NEAREST POINT ON THE INTERIOR SIDE OF THE SHUTTER, WHICH MAY BE THE BLADE, CENTERMATE, OR LOCKING DEVICE.

1/5 HORIZONTAL SECTION W/ COMBINATION BLADES

N.T.S. HORIZ SECTION

NOTE: LOCKS MAY BE MOUNTED ON INTERIOR OR EXTERIOR SIDE OF SHUTTER.

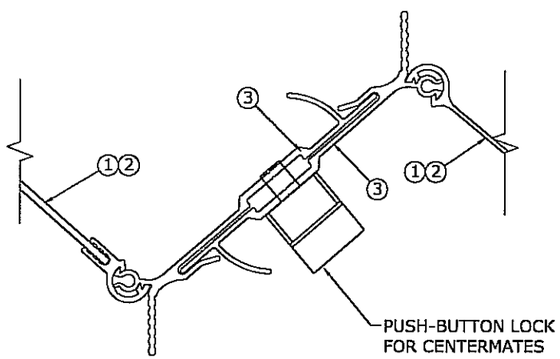

2/5 ALT. PUSH-BUTTON CENTERMATE

N.T.S. HORIZ SECTION

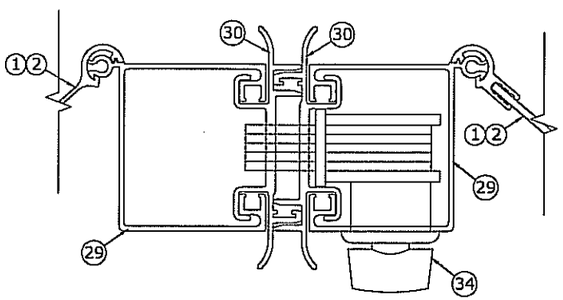

3/5 ALT. HIGH IMPACT CENTERMATE

N.T.S. HORIZ SECTION

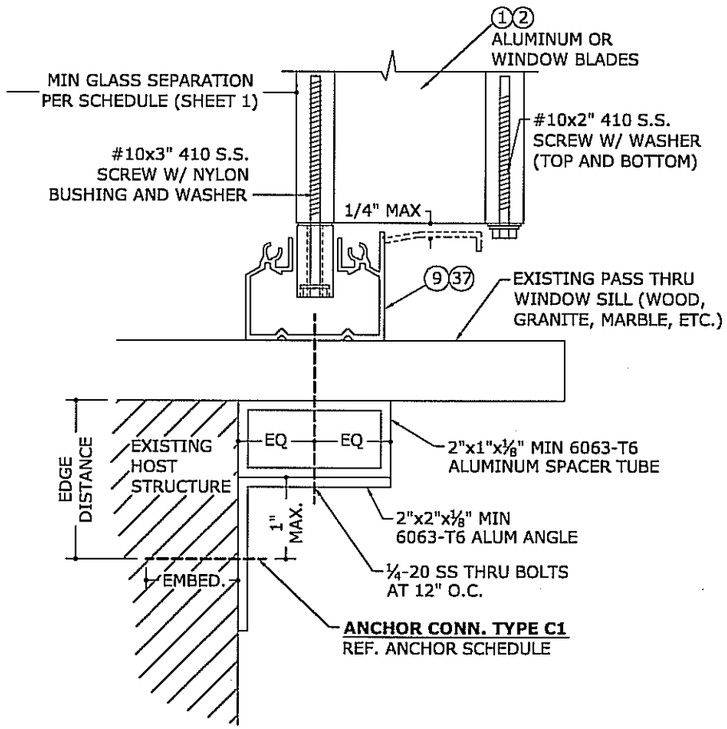

4/5 PASS THRU WINDOW DETAIL

N.T.S. VERT SECTION

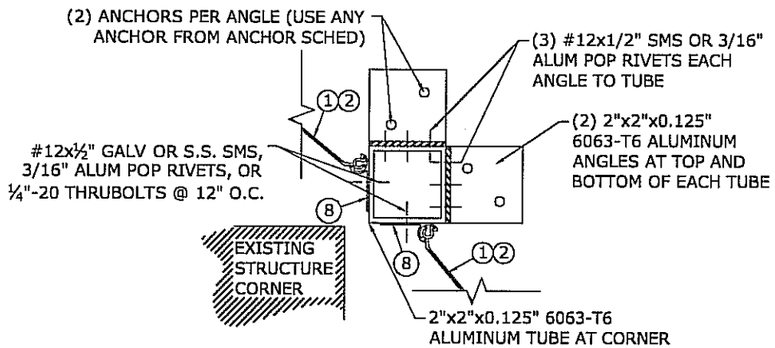

5/5 STANDARD CORNER CLOSURE

N.T.S. HORIZ SECTION

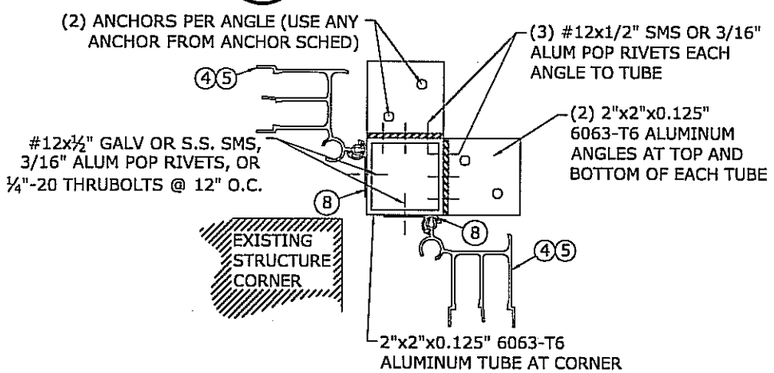

6/5 ALTERNATE CORNER CLOSURE

N.T.S. HORIZ SECTION

FRANK L. BENNARDO, P.E.
PE96064
TX
07/16/2009

FRANK L. BENNARDO, P.E.
160 SW 12th AVENUE, #106
DEERFIELD BEACH, FL 33442
PH: (954) 354-0660 FAX: (954) 354-0443
POWERED BY THE INNOVATIONS OF
ENGINEERING EXPRESS®
EXPERIENCE MORE AT WWW.ENGEXP.COM

IMPACT TECHNOLOGY, INC.
7860 WEST 25TH AVENUE
HIALEAH, FL 33016
PHONE: 305 - 558 - 7739

ACCORDION SHUTTER
WITH ALUMINUM OR POLYCARBONATE BLADES
TEXAS DEPARTMENT OF INSURANCE

REMARKS	DRWN	CHKD	DATE
INIT ISSUE	KL	FLB	07/15/09

09-ITI-0002

SCALE: - 01

PAGE DESCRIPTION:
-
-

10

5

07/16/2009 - 5:40pm keithi F:\01 Project Files\Impact Technology (ITI)\2009\09-ITI-0002 Accordion Shutter (TDI) - Initial Submittal\09-ITI-0002_01a Alum, Polycarb Accordion Shutter.dwg

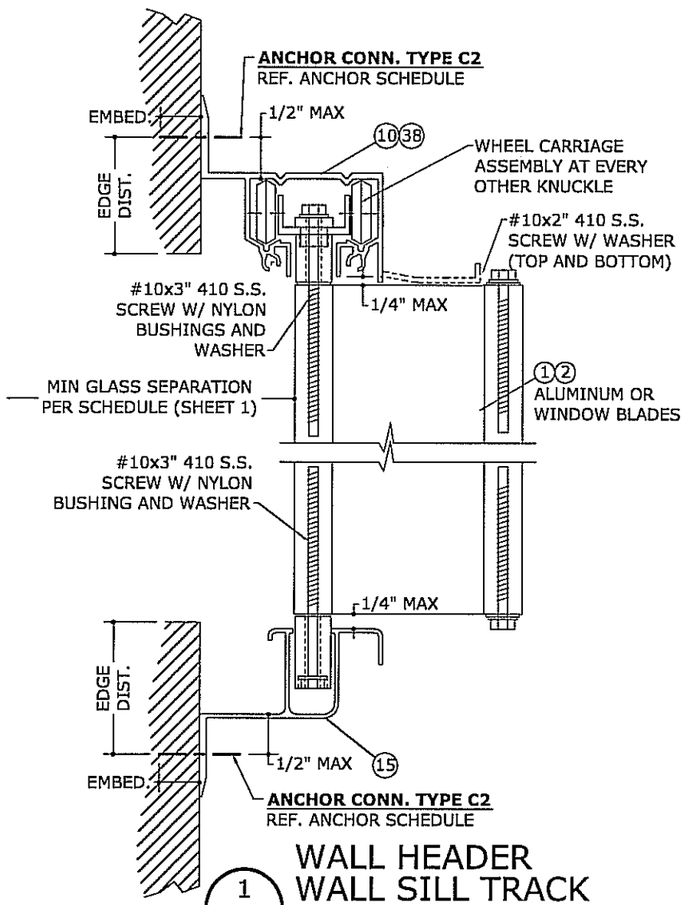

1/6 WALL HEADER WALL SILL TRACK

N.T.S. VERT SECTION

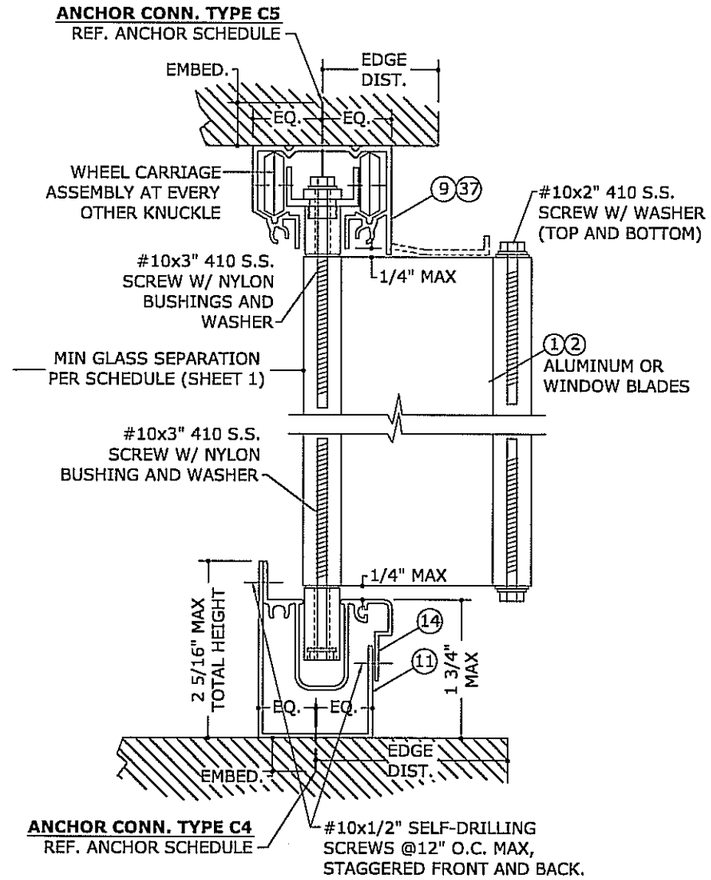

2/6 CEILING HEADER ADJUSTABLE SILL TRACK

N.T.S. VERT SECTION

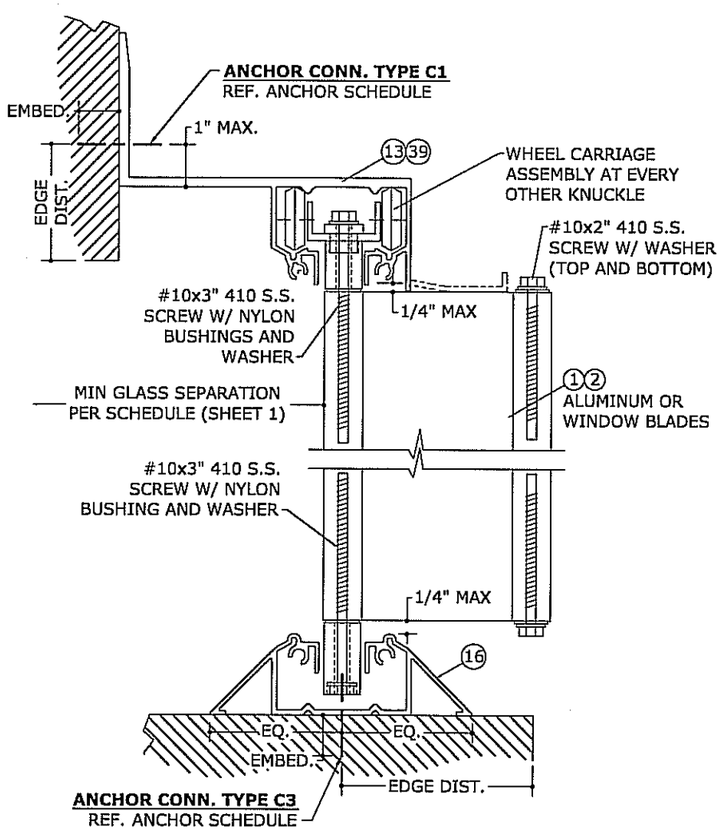

3/6 B.O. WALL HEADER WALKOVER TRACK

N.T.S. VERT SECTION

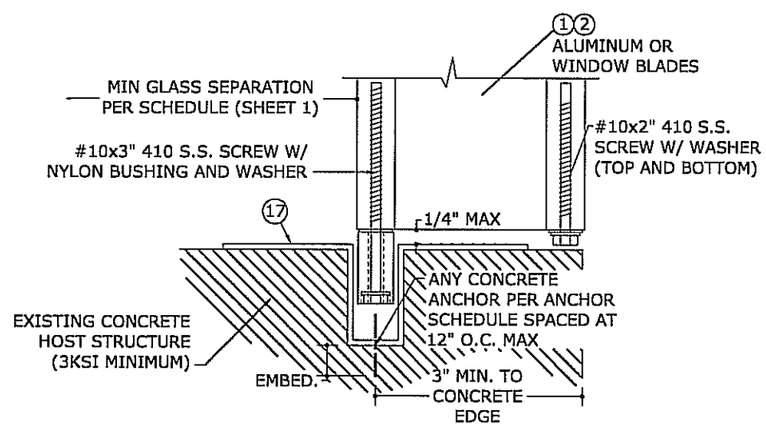

4/6 RECESSED FLOOR TRACK

N.T.S. VERT SECTION

FRANK L. BENNARDO, P.E.
PE96064
TX
07/16/2009

FRANK L. BENNARDO, P.E.
160 SW 12th AVENUE, #106
DEERFIELD BEACH, FL 33442
PH: (954) 354-0660 FAX: (954) 354-0443

POWERED BY THE INNOVATIONS OF
ENGINEERING EXPRESS®
EXPERIENCE MORE AT WWW.ENGEXP.COM

IMPACT TECHNOLOGY, INC.
7860 WEST 25TH AVENUE
HIALEAH, FL 33016
PHONE: 305 - 558 - 7739

ACCORDION SHUTTER
WITH ALUMINUM OR POLYCARBONATE BLADES
TEXAS DEPARTMENT OF INSURANCE

REMARKS	DRWN	CHKD	DATE
INIT ISSUE	KL	FLB	07/15/09

09-ITI-0002

SCALE: - 01

PAGE DESCRIPTION:
-
-

10

6

F:\01 Project Files\Impact Technology (ITI)\2009\09-ITI-0002 Accordion Shutter (TDI) - Initial Submittal\09-ITI-0002_01a Alum. Polycarb Accordion Shutter.dwg
07/16/2009 - 5:40pm kellhl

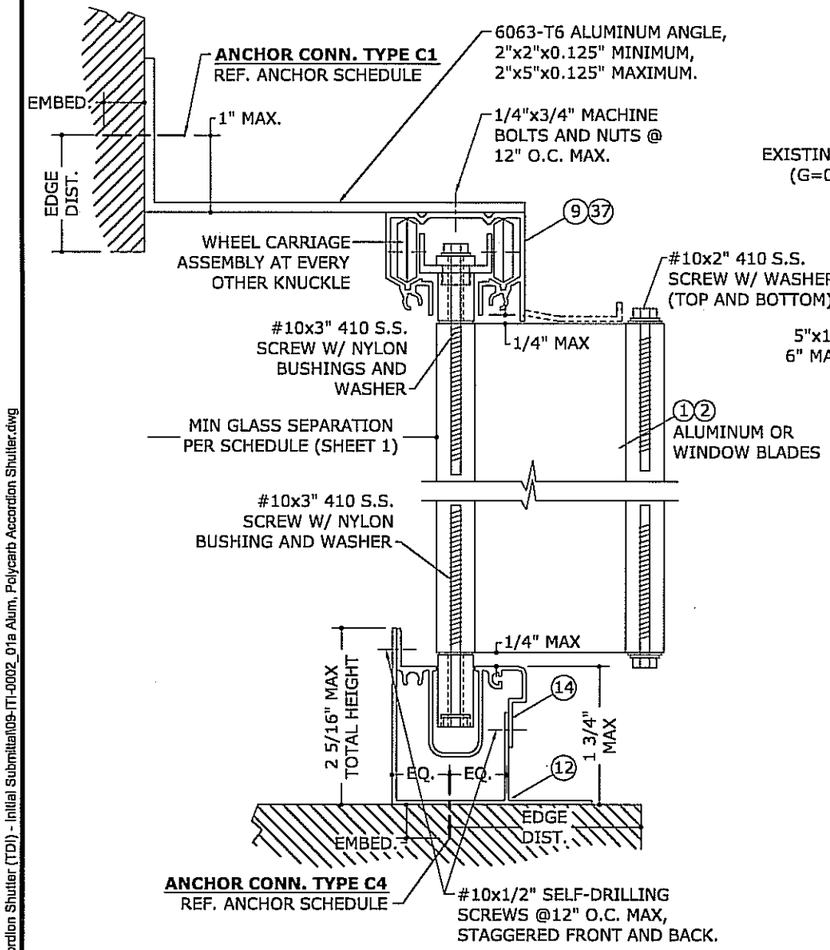

1/7 2"x5" ANGLE W/ CEILING HEADER ALT. ADJUSTABLE SILL TRACK

N.T.S. VERT SECTION

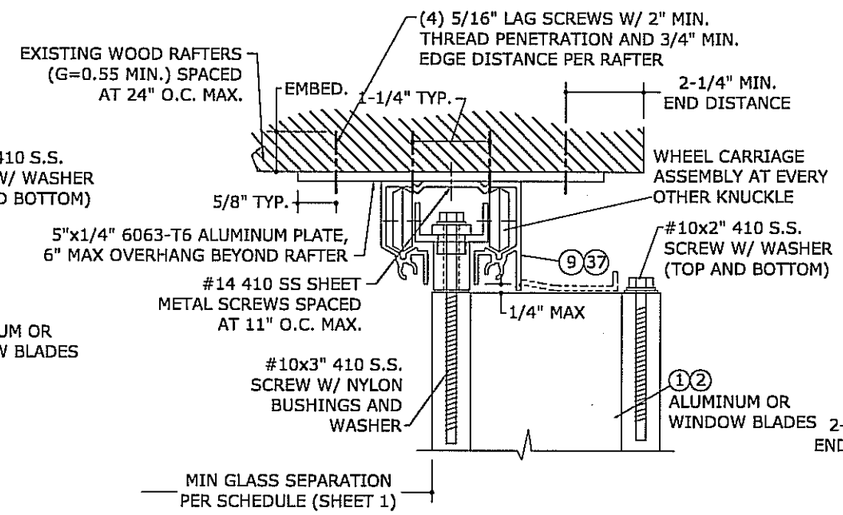

NOTE: MAXIMUM ALLOWABLE SPANS AND DESIGN PRESSURES FOR THIS MOUNTING CONDITION PER TABLE BELOW.

ALLOWABLE DESIGN PRESSURES FOR DETAIL 2/7:

SPAN:	MAX DESIGN PRESSURE:
72"	±124.8 psf
90"	±99.8 psf
108"	±83.2 psf
126"	±71.3 psf
144"	±62.4 psf

2/7 5"x1/4" PLATE TO EXISTING RAFTERS

N.T.S. VERT SECTION

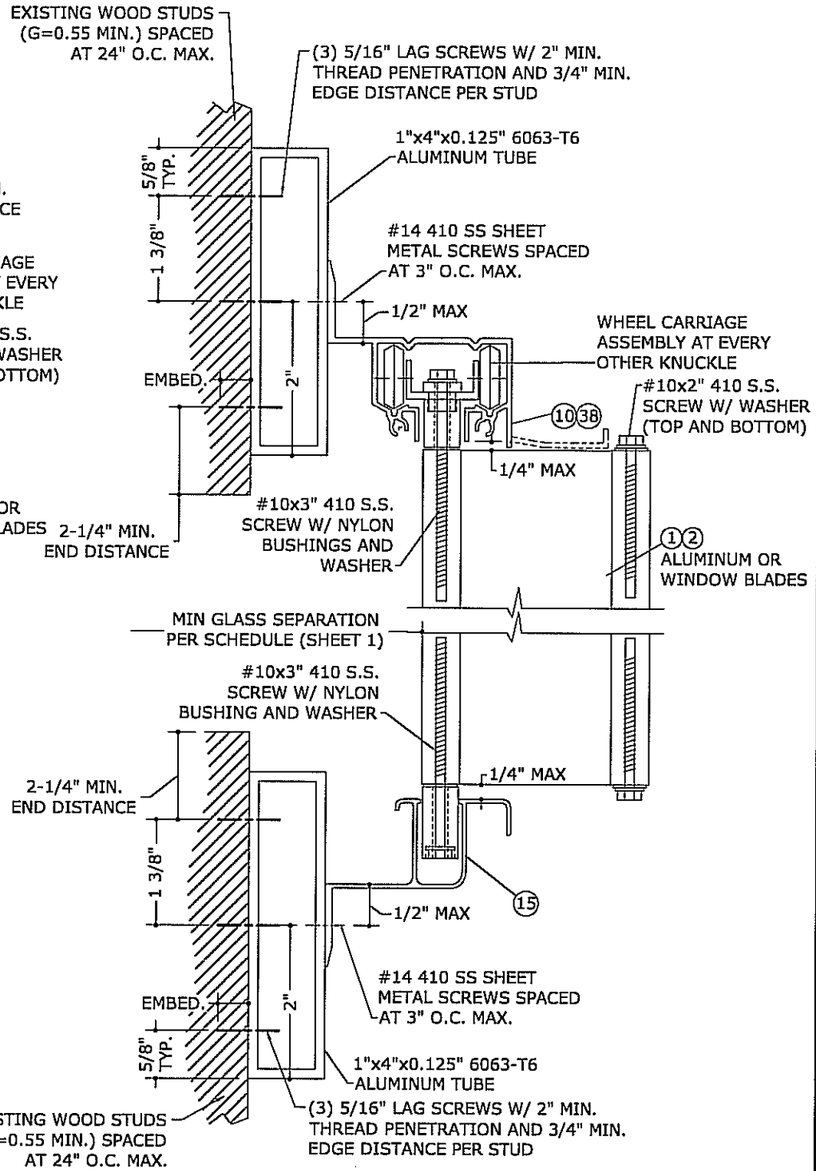

NOTE: MAXIMUM ALLOWABLE SPANS AND DESIGN PRESSURES FOR THIS MOUNTING CONDITION PER TABLE BELOW.

ALLOWABLE DESIGN PRESSURES FOR DETAIL 3/7:

SPAN:	MAX DESIGN PRESSURE:
72"	±111.5 psf
90"	±89.2 psf
108"	±74.3 psf
126"	±63.7 psf
144"	±55.7 psf

3/7 1"x4"x0.125" TUBE TO EXISTING WALL STUDS

N.T.S. VERT SECTION

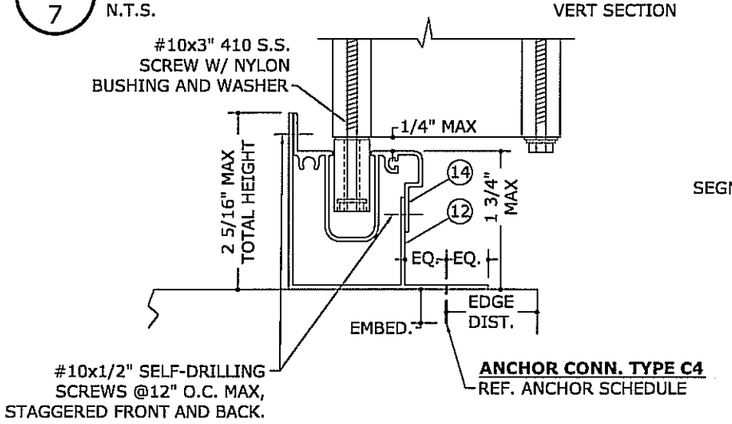

4/7 ALT. ADJUSTABLE SILL TRACK THRU-FLANGE INSTALLATION

N.T.S. VERT SECTION

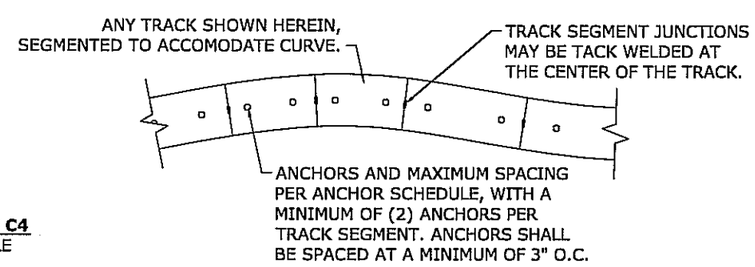

5/7 OPTIONAL CURVED TRACK WITH SEGMENTED SECTIONS

N.T.S. PLAN VIEW

FRANK L. BENNARDO, P.E.
PE96064
TX
07/16/2009

FRANK L. BENNARDO, P.E.
160 SW 12th AVENUE, #106
DEERFIELD BEACH, FL 33442
PH: (954) 354-0660 FAX: (954) 354-0443

POWERED BY THE INNOVATIONS OF
ENGINEERING EXPRESS®
EXPERIENCE MORE AT WWW.ENGEXP.COM

IMPACT TECHNOLOGY, INC.
7860 WEST 25TH AVENUE
HIALEAH, FL 33016
PHONE: 305 - 558 - 7739

ACCORDION SHUTTER
WITH ALUMINUM OR POLYCARBONATE BLADES
TEXAS DEPARTMENT OF INSURANCE

REMARKS	DRWN	CHKD	DATE
INIT ISSUE	KL	FLB	07/15/09

09-ITI-0002

SCALE: - 01

PAGE DESCRIPTION:
-
-

10

7

F:\01 Project Files\Impact Technology (ITI)\2009\09-ITI-0002 Accordion Shutter (TDI) - Initial Submittal\09-ITI-0002_01a Alum, Polycarb Accordion Shutter.dwg
07/16/2009 - 5:41pm kellhl

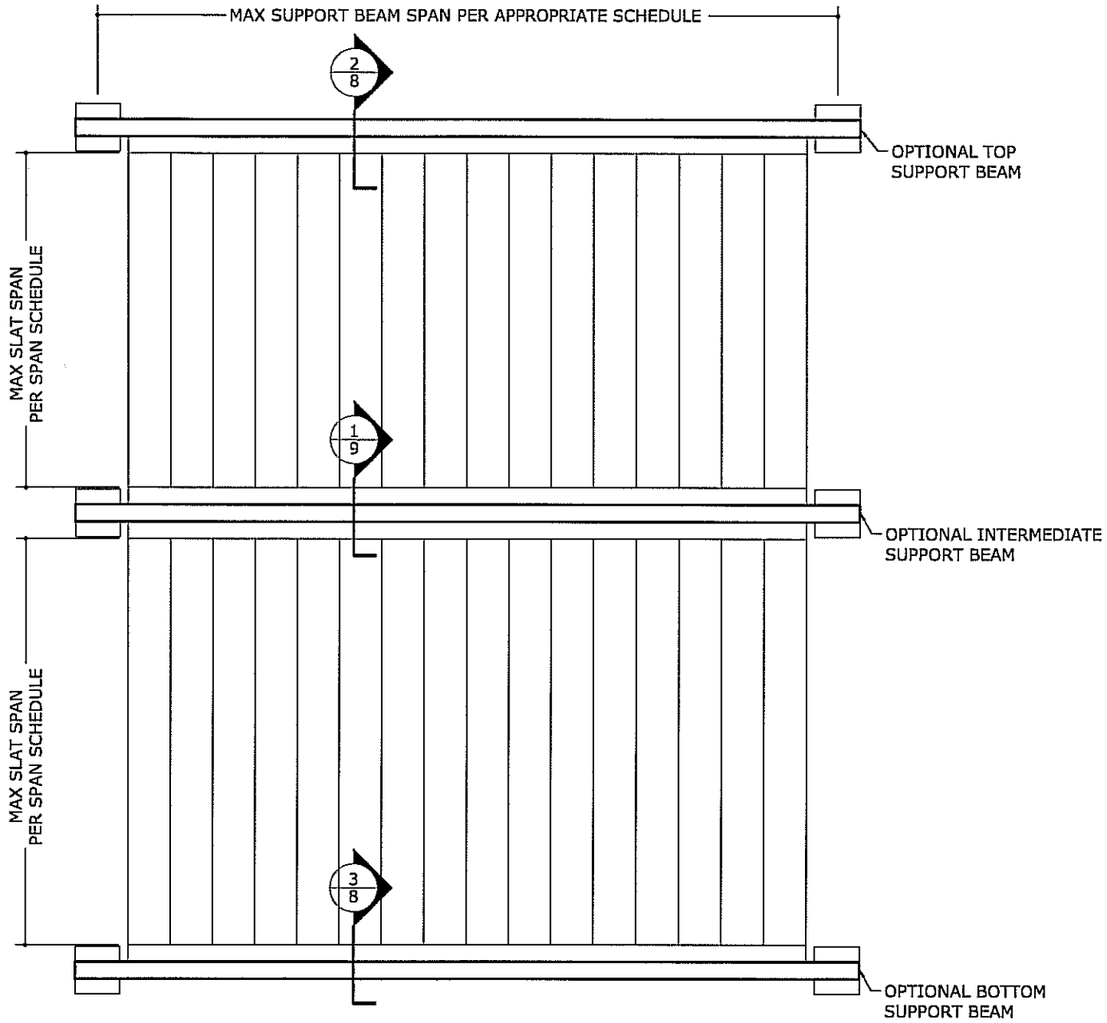

1/8 ELEVATION WITH STORM BARS

N.T.S. EXTERIOR ELEV

BEAM DESIGN SCHEDULE					
BEAM SIZE	SHUTTER SPAN	BEAM SPAN	ALLOWABLE DESIGN PRESSURE		
			TOP BEAM	BOTTOM BEAM	INTERMEDIATE BEAM
2"x5"x0.125"	5'-0"	9'-5"	74.0 PSF	74.0 PSF	37.0 PSF
	8'-0"	8'-1"	73.0 PSF	73.0 PSF	36.0 PSF
	10'-0"	7'-6"	73.0 PSF	73.0 PSF	36.0 PSF
2"x8"x0.072"/0.224"	5'-0"	14'-0"	68.4 PSF	81.0 PSF	34.2 PSF
	8'-0"	11'-6"	61.8 PSF	83.1 PSF	30.9 PSF
	10'-0"	10'-4"	61.1 PSF	82.3 PSF	30.5 PSF
2"x9"x0.072"/0.224"	5'-0"	15'-5"	59.4 PSF	80.5 PSF	29.7 PSF
	8'-0"	12'-5"	56.3 PSF	80.4 PSF	28.2 PSF
	10'-0"	11'-2"	55.5 PSF	79.6 PSF	27.7 PSF

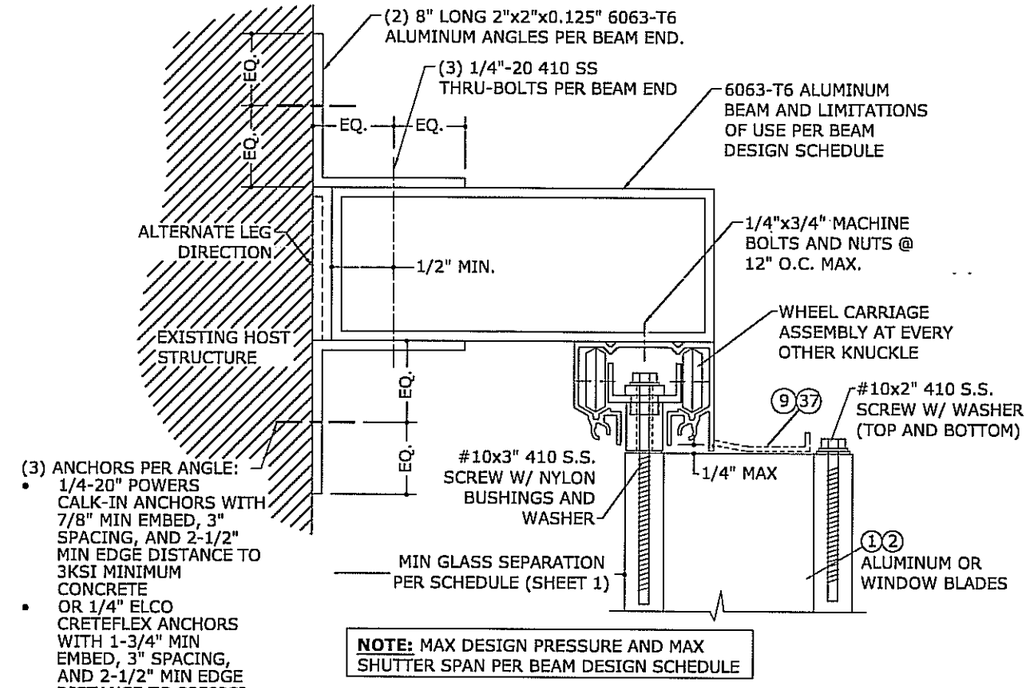

2/8 TOP SUPPORT BEAM

N.T.S. VERT SECTION

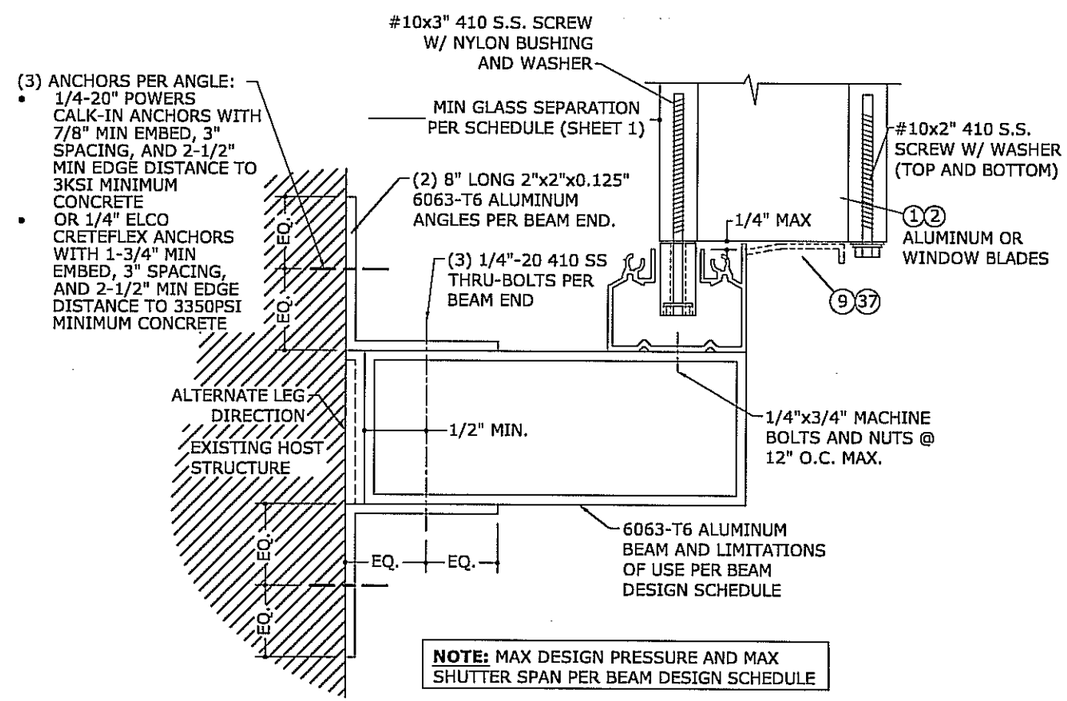

3/8 BOTTOM SUPPORT BEAM

N.T.S. VERT SECTION

FRANK L. BENNARDO, P.E.
PE96064
TX
07/16/2009

FRANK L. BENNARDO, P.E.
160 SW 12th AVENUE, #106
DEERFIELD BEACH, FL 33442
Ph: (954) 354-0660 Fax: (954) 354-0443
POWERED BY THE INNOVATIONS OF
ENGINEERING EXPRESS®
EXPERIENCE MORE AT WWW.ENGEXP.COM

IMPACT TECHNOLOGY, INC.
7860 WEST 25TH AVENUE
HIALEAH, FL 33016
PHONE: 305 - 558 - 7739

ACCORDION SHUTTER
WITH ALUMINUM OR POLYCARBONATE BLADES
TEXAS DEPARTMENT OF INSURANCE

REMARKS	DRWN	CHKD	DATE
INIT ISSUE	KL	FLB	07/15/09

09-ITI-0002

SCALE: - 01

PAGE DESCRIPTION:

10

8

F:\01 Project Files\Impact Technology (ITI)\2009\09-ITI-0002 Accordion Shutter (TDI) - Initial Submittal\09-ITI-0002_01a Alum, Polycarb Accordion Shutter.dwg
07/16/2009 - 5:41pm kelihl

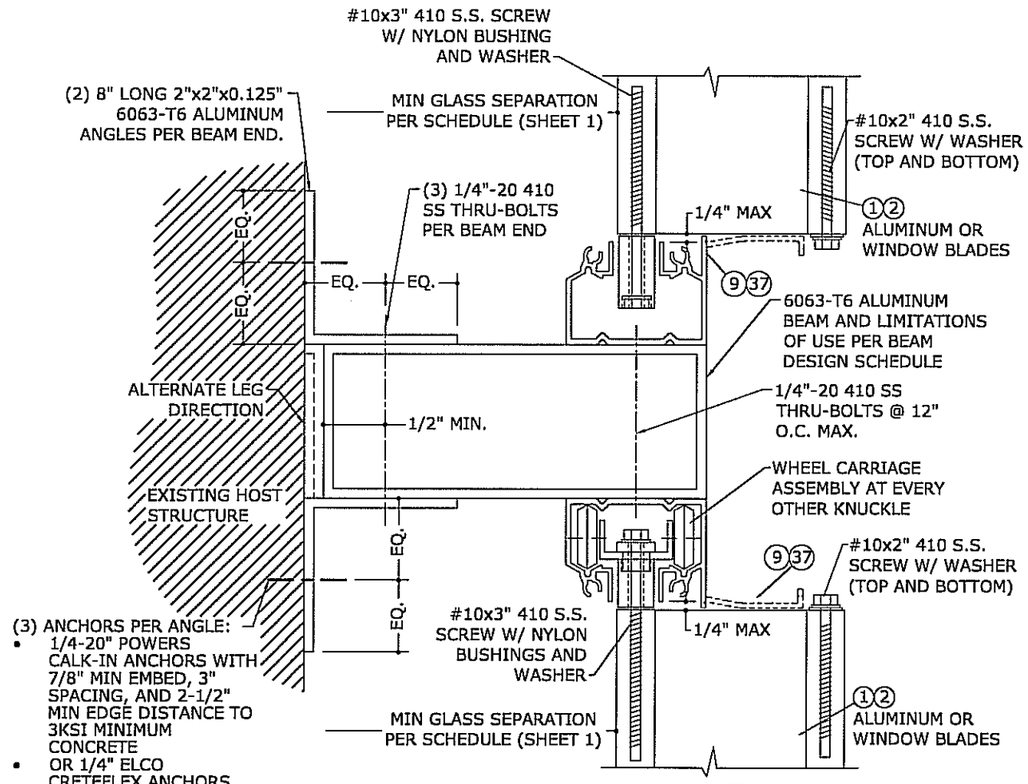

NOTE: MAX DESIGN PRESSURE AND MAX SHUTTER SPAN PER BEAM DESIGN SCHEDULE

1/9 INTERMEDIATE SUPPORT BEAM

N.T.S. VERT SECTION

BEAM DESIGN SCHEDULE					
BEAM SIZE	SHUTTER SPAN	BEAM SPAN	ALLOWABLE DESIGN PRESSURE		
			TOP BEAM	BOTTOM BEAM	INTERMEDIATE BEAM
2"x5"x0.125"	5'-0"	9'-5"	74.0 PSF	74.0 PSF	37.0 PSF
	8'-0"	8'-1"	73.0 PSF	73.0 PSF	36.0 PSF
	10'-0"	7'-6"	73.0 PSF	73.0 PSF	36.0 PSF
2"x8"x0.072"/0.224"	5'-0"	14'-0"	68.4 PSF	81.0 PSF	34.2 PSF
	8'-0"	11'-6"	61.8 PSF	83.1 PSF	30.9 PSF
	10'-0"	10'-4"	61.1 PSF	82.3 PSF	30.5 PSF
2"x9"x0.072"/0.224"	5'-0"	15'-5"	59.4 PSF	80.5 PSF	29.7 PSF
	8'-0"	12'-5"	56.3 PSF	80.4 PSF	28.2 PSF
	10'-0"	11'-2"	55.5 PSF	79.6 PSF	27.7 PSF

FRANK L. BENNARDO, P.E.
PE96064
TX
07/16/2009

FRANK L. BENNARDO, P.E.
160 SW 12th AVENUE, #106
DEERFIELD BEACH, FL 33442
PH: (954) 354-0660 FAX: (954) 354-0443
POWERED BY THE INNOVATIONS OF
ENGINEERING EXPRESS®
EXPERIENCE MORE AT WWW.ENGEXP.COM

IMPACT TECHNOLOGY, INC.
7860 WEST 25TH AVENUE
HIALEAH, FL 33016
PHONE: 305 - 558 - 7739

ACCORDION SHUTTER
WITH ALUMINUM OR POLYCARBONATE BLADES
TEXAS DEPARTMENT OF INSURANCE

REMARKS	DRWN	CHKD	DATE
INIT ISSUE	KL	FLB	07/15/09

09-ITI-0002

SCALE: - 01

PAGE DESCRIPTION:
-
-

10

9

07/16/2009 - 5:41pm kellyh F:\01 Project Files\Impact Technology (ITI)\2009\09-ITI-0002 Accordion Shutter (TDI) - Initial Submittal\09-ITI-0002_01a Alum, Polycarb Accordion Shutter.dwg

ANCHOR SCHEDULE

HOST STRUCT.	ANCHOR	LOAD (psf)	2.5" MIN EDGE DISTANCE														
			Spans Up To 6'-0" CONN TYPE					Spans Up To 9'-0" CONN TYPE					Spans Up To 12'-0" CONN TYPE				
			C1	C2	C3	C4	C5	C1	C2	C3	C4	C5	C1	C2	C3	C4	C5
CONCRETE	1/4" ITW TAPCON WITH 1-3/4" EMBED (3192psi MIN CONC)	47	12.0"	12.0"	12.0"	11.7"	12.0"	12.0"	12.0"	12.0"	7.4"	12.0"	11.2"	8.9"	11.8"	5.5"	9.0"
		60	12.0"	12.0"	12.0"	8.9"	12.0"	12.0"	9.5"	12.0"	5.7"	9.4"	7.9"	6.4"	9.4"	4.2"	7.0"
		72	12.0"	12.0"	12.0"	7.3"	11.9"	9.2"	7.4"	10.3"	4.7"	7.8"	6.2"	5.1"	7.9"	3.5"	5.8"
		120	7.9"	6.4"	9.4"	4.2"	7.0"	5.8"	4.7"	7.4"	3.3"	5.5"	5.8"	4.7"	7.4"	3.3"	5.5"
		152	5.8"	4.7"	7.5"	3.3"	5.5"	5.8"	4.7"	7.4"	3.3"	5.5"	5.8"	4.7"	7.4"	3.3"	5.5"
	1/4" ELCO PANELMATE (FEMALE, MALE) W/ 1-3/4" MIN EMBED (3350psi MIN CONC) *	47	12.0"	12.0"	12.0"	11.8"	12.0"	12.0"	12.0"	12.0"	7.5"	12.0"	11.2"	8.9"	12.0"	5.5"	9.2"
		60	12.0"	12.0"	12.0"	9.0"	12.0"	11.9"	9.5"	12.0"	5.8"	9.6"	7.9"	6.4"	9.6"	4.3"	7.1"
		72	12.0"	12.0"	12.0"	7.3"	12.0"	9.1"	7.3"	10.7"	4.8"	8.0"	6.2"	5.0"	8.1"	3.5"	5.9"
		120	7.9"	6.4"	9.6"	4.3"	7.1"	5.8"	4.7"	7.7"	3.3"	5.6"	5.8"	4.7"	7.7"	3.3"	5.6"
		152	5.8"	4.7"	7.7"	3.3"	5.6"	5.8"	4.7"	7.7"	3.3"	5.6"	5.8"	4.7"	7.7"	3.3"	5.6"
	1/4 ELCO CRETEFLEX W/ 1-3/4" MIN EMBED (3350psi MIN CONC)	47	12.0"	12.0"	12.0"	12.0"	12.0"	12.0"	12.0"	12.0"	9.6"	12.0"	12.0"	10.2"	12.0"	7.0"	12.0"
		60	12.0"	12.0"	12.0"	11.4"	12.0"	12.0"	10.9"	12.0"	7.3"	12.0"	9.1"	7.3"	12.0"	5.4"	9.7"
		72	12.0"	12.0"	12.0"	9.4"	12.0"	10.5"	8.4"	12.0"	6.0"	10.8"	7.1"	5.8"	11.8"	4.5"	8.1"
		120	9.1"	7.3"	12.0"	5.4"	9.7"	6.6"	5.4"	11.2"	4.2"	7.6"	6.6"	5.4"	11.2"	4.2"	7.6"
		152	6.7"	5.4"	11.2"	4.2"	7.6"	6.6"	5.4"	11.2"	4.2"	7.6"	6.6"	5.4"	11.2"	4.2"	7.6"
	1/4-20 POWERS CALK-IN WITH 7/8" MIN EMBED (3000psi MIN CONC) *	47	12.0"	12.0"	12.0"	9.2"	12.0"	12.0"	12.0"	11.1"	5.9"	9.1"	9.7"	7.7"	8.5"	4.3"	6.7"
		60	12.0"	12.0"	12.0"	7.0"	10.7"	10.4"	8.2"	8.8"	4.5"	7.1"	6.9"	5.5"	6.7"	3.3"	5.3"
		72	12.0"	11.7"	10.9"	5.7"	8.9"	7.9"	6.4"	7.4"	3.7"	5.8"	5.4"	4.4"	5.6"		4.4"
		120	6.9"	5.5"	6.7"	3.3"	5.3"	5.0"	4.1"	5.3"		4.1"	5.0"	4.1"	5.3"		4.1"
		152	5.0"	4.1"	5.3"		4.1"	5.0"	4.1"	5.3"		4.1"	5.0"	4.1"	5.3"		4.1"
	1/4 ELCO PANELMATE INSERT WITH 1-5/8" MIN EMBED (3000psi MIN CONC) *	47	12.0"	12.0"	12.0"	7.7"	12.0"	11.3"	8.8"	10.6"	4.9"	8.2"	7.1"	5.6"	8.1"	3.6"	6.1"
		60	12.0"	11.7"	12.0"	5.8"	9.7"	7.5"	6.0"	8.5"	3.8"	6.3"	5.0"	4.0"	6.5"		4.7"
		72	10.9"	8.5"	10.4"	4.8"	8.0"	5.8"	4.6"	7.1"	3.1"	5.3"	3.9"	3.2"	5.4"		3.9"
		120	5.0"	4.0"	6.5"		4.7"	3.6"	3.0"	5.1"		3.7"	3.6"	3.0"	5.1"		3.7"
		152	3.7"	3.0"	5.2"		3.7"	3.6"	3.0"	5.1"		3.7"	3.6"	3.0"	5.1"		3.7"
HOLLOW BLOCK	1/4" ITW TAPCON WITH 1-1/4" EMBED	47	12.0"	9.3"	10.8"	4.3"	8.1"	5.3"	4.1"	7.6"		5.2"	3.3"		5.9"		3.9"
		60	7.2"	5.4"	8.8"	3.2"	6.2"	3.5"		6.1"		4.0"			4.7"		3.0"
		72	5.1"	3.9"	7.5"		5.1"			5.2"		3.3"			4.0"		
		120			4.7"		3.0"			3.8"					3.8"		
		152			3.8"					3.8"					3.8"		
	1/4" ELCO PANELMATE (FEMALE, MALE) W/ 1-1/4" MIN EMBED *	47	12.0"	12.0"	12.0"	6.3"	10.6"	9.0"	7.0"	9.2"	4.0"	6.9"	5.6"	4.5"	7.1"		5.1"
		60	12.0"	9.3"	10.6"	4.8"	8.2"	6.0"	4.8"	7.3"	3.1"	5.4"	4.0"	3.2"	5.6"		4.0"
		72	8.7"	6.7"	9.0"	3.9"	6.8"	4.6"	3.7"	6.2"		4.5"	3.1"		4.7"		3.3"
		120	4.0"	3.2"	5.6"		4.0"			4.5"		3.1"			4.5"		3.1"
		152			4.5"		3.1"			4.5"		3.1"			4.5"		3.1"
	1/4 ELCO CRETEFLEX W/ 1-1/4" MIN EMBED	47	12.0"	12.0"	12.0"	7.4"	12.0"	10.0"	7.8"	11.5"	4.7"	8.4"	6.2"	5.0"	8.8"	3.4"	6.2"
		60	12.0"	10.3"	12.0"	5.6"	10.0"	6.7"	5.3"	9.2"	3.6"	6.5"	4.4"	3.6"	7.0"		4.8"
		72	9.6"	7.5"	11.3"	4.6"	8.2"	5.1"	4.1"	7.8"	3.0"	5.4"	3.5"		5.9"		4.0"
		120	4.4"	3.6"	7.0"		4.8"	3.2"		5.6"		3.8"	3.2"		5.6"		3.8"
		152	3.2"		5.6"		3.8"	3.2"		5.6"		3.8"	3.2"		5.6"		3.8"
	1/4-20 POWERS CALK-IN WITH 7/8" MIN EMBED *	47	12.0"	11.5"	11.2"	4.9"	8.7"	6.5"	5.1"	7.9"	3.1"	5.7"	4.1"	3.2"	6.0"		4.2"
		60	8.9"	6.7"	9.1"	3.7"	6.7"	4.3"	3.4"	6.3"		4.4"			4.8"		3.3"
		72	6.3"	4.9"	7.7"	3.1"	5.5"	3.3"		5.3"		3.6"			4.1"		
		120			4.8"		3.3"			3.8"					3.8"		
		152			3.9"					3.8"					3.8"		
	1/4 ELCO PANELMATE INSERT WITH 1-1/4" MIN EMBED *	47	12.0"	12.0"	12.0"	7.7"	12.0"	11.3"	8.8"	10.6"	4.9"	8.2"	7.1"	5.6"	8.1"	3.6"	6.1"
		60	12.0"	11.7"	12.0"	5.8"	9.7"	7.5"	6.0"	8.5"	3.8"	6.3"	5.0"	4.0"	6.5"		4.7"
		72	10.9"	8.5"	10.4"	4.8"	8.0"	5.8"	4.6"	7.1"	3.1"	5.3"	3.9"	3.2"	5.4"		3.9"
		120	5.0"	4.0"	6.5"		4.7"	3.6"	3.0"	5.1"		3.7"	3.6"	3.0"	5.1"		3.7"
		152	3.7"	3.0"	5.2"		3.7"	3.6"	3.0"	5.1"		3.7"	3.6"	3.0"	5.1"		3.7"

HOST STRUCT.	ANCHOR	LOAD (psf)	3/4" MIN EDGE DISTANCE														
			Spans Up To 6'-0" CONN TYPE					Spans Up To 9'-0" CONN TYPE					Spans Up To 12'-0" CONN TYPE				
			C1	C2	C3	C4	C5	C1	C2	C3	C4	C5	C1	C2	C3	C4	C5
WOOD	1/4" ITW TAPCON OR #14 WOOD SCREW W/ 1-1/2" EMBED	47	12.0"	12.0"	10.4"	7.1"	9.4"	12.0"	12.0"	7.1"	4.6"	6.2"	10.3"	8.2"	5.3"	3.4"	4.6"
		60	12.0"	12.0"	8.2"	5.5"	7.3"	11.0"	8.7"	5.6"	3.6"	4.8"	7.3"	5.9"	4.2"	2.6"	3.6"
		72	12.0"	12.0"	6.9"	4.5"	6.1"	8.4"	6.7"	4.7"	2.9"	4.0"	5.7"	4.6"	3.5"	2.2"	3.0"
		120	7.3"	5.9"	4.2"	2.6"	3.6"	5.3"	4.3"	3.3"	2.1"	2.8"	5.3"	4.3"	3.3"	2.1"	2.8"
		152	5.3"	4.3"	3.3"	2.1"	2.8"	5.3"	4.3"	3.3"	2.1"	2.8"	5.3"	4.3"	3.3"	2.1"	2.8"
	1/4" ELCO PANELMATE (FEMALE, MALE) W/ 1-7/8" MIN EMBED *	47	12.0"	12.0"	12.0"	11.5"	12.0"	12.0"	12.0"	12.0"	7.4"	10.9"	12.0"	10.8"	9.9"	5.5"	8.1"
		60	12.0"	12.0"	12.0"	8.8"	12.0"	12.0"	11.5"	10.3"	5.7"	8.5"	9.5"	7.7"	7.8"	4.2"	6.3"
		72	12.0"	12.0"	12.0"	7.3"	10.7"	11.0"	8.9"	8.6"	4.7"	7.0"	7.5"	6.1"	6.5"	3.5"	5.3"
		120	9.5"	7.7"	7.8"	4.2"	6.3"	7.0"	5.7"	6.2"	3.3"	5.0"	7.0"	5.7"	6.2"	3.3"	5.0"
		152	7.0"	5.7"	6.2"	3.3"	5.0"	7.0"	5.7"	6.2"	3.3"	5.0"	7.0"	5.7"	6.2"	3.3"	5.0"
	1/4" LAG SCREW WITH 1.5" MIN THREAD PENETR EMBED	47	12.0"	12.0"	9.9"	7.3"	9.2"	12.0"	12.0"	6.7"	4.7"	6.1"	12.0"	10.2"	5.0"	3.5"	4.5"
		60	12.0"	12.0"	7.8"	5.6"	7.1"	12.0"	10.9"	5.3"	3.7"	4.7"	9.0"	7.3"	4.0"	2.7"	3.5"
		72	12.0"	12.0"	6.5"	4.6"	5.9"	10.4"	8.4"	4.4"	3.0"	3.9"	7.1"	5.8"	3.3"	2.3"	2.9"
		120	9.0"	7.3"	4.0"	2.7"	3.5"	6.6"	5.4"	3.1"	2.1"	2.8"	6.6"	5.4"	3.1"	2.1"	2.8"
		152	6.6"	5.4"	3.1"	2.1"	2.8"	6.6"	5.4"	3.1"	2.1"	2.8"	6.6"	5.4"	3.1"	2.1"	2.8"

ANCHOR NOTES:

1. ANCHORS SHALL BE INSTALLED IN ACCORDANCE WITH MANUFACTURERS' RECOMMENDATIONS.
2. TAPCONS MAY BE CARBON STEEL OR STAINLESS STEEL AND SHALL BE MANUFACTURED BY ITW.
3. ENSURE MINIMUM 2.5" EDGE DISTANCE FOR ALL ANCHORS TO CONCRETE & TO HOLLOW BLOCK.
4. WHERE ANCHORS FASTEN TO NARROW FACE OF STUD FRAMING, ANCHOR SHALL BE LOCATED IN CENTER OF NOMINAL 2x (MIN) WOOD STUD (i.e. 3/4" EDGE DISTANCE IS ACCEPTABLE FOR ANCHORS TO WOOD FRAMING).
5. WOOD HOST STRUCTURE SHALL BE "SOUTHERN PINE" G=0.55 OR GREATER DENSITY.
6. MINIMUM EMBEDMENT SHALL BE AS NOTED IN ANCHOR SCHEDULE. MINIMUM EMBEDMENT AND EDGE DISTANCE EXCLUDES STUCCO, FOAM, BRICK, AND OTHER WALL FINISHES.
7. ANCHOR SCHEDULE APPLIES TO ALL PRODUCTS CERTIFIED HEREIN, BUT ONLY PROVIDES MAXIMUM ALLOWABLE ANCHOR SPACING. MAXIMUM ALLOWABLE SPANS AND PRESSURES INDICATED IN SPAN SCHEDULE SHALL APPLY.
8. WHERE EXISTING STRUCTURE IS WOOD FRAMING, EXISTING CONDITIONS MAY VARY. FIELD VERIFY THAT FASTENERS ARE INTO ADEQUATE WOOD FRAMING MEMBERS, NOT INTO PLYWOOD.
9. WOOD BUCKS (BY OTHERS) SHALL BE ANCHORED PROPERLY TO TRANSFER LOADS TO THE EXISTING STRUCTURE.
10. MACHINE SCREWS SHALL HAVE MINIMUM OF 1/2" ENGAGEMENT OF THREADS IN BASE ANCHOR AND MAY HAVE EITHER A PAN HEAD, TRUSS HEAD, OR WAFER HEAD ("SIDEWALK BOLT") U.N.O.
11. ▨ DESIGNATES ANCHOR CONDITIONS WHICH ARE NOT ACCEPTABLE FOR USE.
13. * DESIGNATES ANCHORS WHICH ARE REMOVABLE.

FRANK L. BENNARDO, P.E.
PE96064
TX
07/16/2009

FRANK L. BENNARDO, P.E.
160 SW 12th AVENUE, #106
DEERFIELD BEACH, FL 33442
PH: (954) 354-0660 FAX: (954) 354-0443

POWERED BY THE INNOVATIONS OF
ENGINEERING EXPRESS®
EXPERIENCE MORE AT WWW.ENGEXP.COM

IMPACT TECHNOLOGY, INC.
7860 WEST 25TH AVENUE
HIALEAH, FL 33016
PHONE: 305 - 558 - 7739

ACCORDION SHUTTER
WITH ALUMINUM OR POLYCARBONATE BLADES
TEXAS DEPARTMENT OF INSURANCE

REMARKS	DRWN	CHKD	DATE
INIT ISSUE	KL	FLB	07/15/09

09-ITI-0002
SCALE: - 01
PAGE DESCRIPTION:
-
-

10

F:\01 Project Files\Impact Technology (ITI)\2009\09-ITI-0002 Accordion Shutter (TDI) - Initial Submittal\09-ITI-0002_01a Alum, Polycarb Accordion Shutter.dwg
07/16/2009 - 5:41pm keithl