GENERAL NOTES:

1. BERTHA H.V. ACCORDION SHUTTER SYSTEM SHOWN ON THIS PRODUCT EVALUATION DOCUMENT (P.E.D.) HAS BEEN VERIFIED FOR COMPLIANCE IN ACCORDANCE WITH THE 2006 EDITIONS OF THE INTERNATIONAL BUILDING CODE, (I.B.C.) AND INTERNATIONAL RESIDENTIAL CODE, (I.R.C.) WITH THE 2006 TEXAS REVISIONS, EFFECTIVE JANUARY 1, 2008. THIS PRODUCT SHALL BE INSTALLED AT SEAWARD AND INLAND AREAS, AS DEFINED BY THE TEXAS DEPARTMENT OF INSURANCE. DESIGN WIND LOADS SHALL BE DETERMINED AS PER SECTION 1609 OF THE INTERNATIONAL BUILDING CODE, FOR A BASIC WIND SPEED AS REQUIRED BY THE JURISDICTION WHERE SHUTTER WILL BE INSTALLED, AND FOR A DIRECTIONALITY FACTOR Kd=0.85, IN ACCORDANCE W/ ASCE 7-05 STANDARD. THIS PROCUDT ADEQUACY FOR IMPACT AND CYCLIC RESISTANCE HAS BEEN VERIFIED IN ACCORDANCE WITH SECTIONS 1609.1.2 AND R301.1.3 OF THE ABOVE MENTIONED CODES, RESPECTIVELY, AS PER ASTM E-1886 AND E-1996 STANDARS, AND FOR UNIFORM STATIC WIND LOAD, AS PER ASTM E-330, AS WELL AS FLORIDA HIGH VELOCITY HURRICANE ZONE PROTOCOL TAS 201, 202 & 203, PER AMERICAN TESTING LAB REPORTS:

   -HV BLADE ① #0214.01-03, #0715.01-03, #1004.01-05, #1214.01-05, #0317.02-06, #0609.01-10 AND #0210.01-11 AS PER TAS-201, TAS-202 AND TAS-203 PROTOCOLS AND ASTM E-1886 AND E-1996 STANDARDS (MISSILE LEVEL D, WIND ZONES 1, 2 & 3) & #1220.01-10 AS PER TAS 201, 203 & 203 PROTOCOLS LARGE MISSILE.

   -HV WINDOW BLADE ⑯ #0505.01-08 AS PER ASTM E-1886 AND E-1996 (MISSILE LEVEL D, WIND ZONES 1, 2, 3) BASIC PROTECTION ONLY AND # 0725.01-08 AS PER TAS 202 PROTOCOL.

   PRODUCT MAY BE INSTALLED WITHIN WIND ZONES 1 THRU 3, ONLY AT BUILDINGS W/ BASIC PROTECTION, CORRESPONDING TO MISSILE TYPE D.

2. ALL SCREWS AND BOLTS INSTALLED AT SEAWARD AREAS TO BE STAINLESS STEEL 304 OR 316 AISI SERIES AND MEET ASTM A167, OR HOT DIPPED GALVANIZED (AFTER FABRICATION) CARBON STEEL AS PER ASTM A123 OR ASTM A153, OR HOT DIPPED GALVANIZED OR GALVANNEALED (PRIOR TO FABRICATION) AND MEET ASTM A653 WITH 50 ksi YIELD STRENGTH AND 90 ksi TENSILE STRENGTH, PER 2006 TEXAS REVISIONS TO SECTION 1716.1.1 OF THE 2006 I.B.C. AND SECTION R325.1.1 OF THE 2006 I.R.C.

3. ALL SCREWS & BOLTS INSTALLED AT INLAND I AREAS TO BE STAINLESS STEEL 304 OR 316 AISI SERIES AND MEET ASTM A167, OR HOT DIPPED GALVANIZED (AFTER FABRICATION) CARBON STEEL AS PER ASTM A123 OR ASTM A153, OR HOT DIPPED GALVANIZED OR GALVANNEALED (PRIOR TO FABRICATION) AND MEET ASTM A653; HOT DIP GALVANIZED OR ELECTRO GALVANIZED PER ASTM A641, MECHANICALLY DEPOSITED ZINC COATINGS PER ASTM B695 OR ELECTRO DEPOSITED ZINC COATINGS PER ASTM B633, PER THE 2006 TEXAS REVISIONS TO SECTION 1716.1.2 OF THE 2006 I.B.C. AND TO SECTION R325.1.2 OF THE 2006 I.R.C.

4. HV BLADE ① AND HV WINDOW BLADE ⑯ ARE ENGINEERED TO WORK IN UNISON WITH EACH OTHER UNDER THE GENERAL LIMITATIONS AND CONDITIONS OF USE INDICATED ON SHEET 19

5. BERTHA H.V. ACCORDION PINS (HV SCREWS), USED AT BLADES KNUCKLE AND FOR DIRECT MOUNT CONNECTION TO TRACKS SHALL BE #14x2.75" AND #14x1.75" RESPECTIVELY, 410-HT MINIMUM SERIES STAINLESS STEEL SCREWS WITH 135.0 ksi YIELD STRENGTH AND 180 ksi TENSILE STRENGTH. PINS SHALL BE COATED WITH BERTHA HV DACROSHIELD COATING SYSTEM AS MANUFACTURED BY APPROVED COATING APPLICATORS, REGISTERED WITH AMERICAN SHUTTER SYSTEMS ASSOCIATION. PINS MUST BEAR THE HV MARKING ON THEIR HEAD.

6. ALL ALUMINUM EXTRUSIONS SHALL BE ALUMINUM ASSOCIATION ALLOY AND TEMPER AS INDICATED ON SHEETS 2 AND 3. MINIMUM YIELD STRENGTH FOR 6063-T6 ALLOY IS 30.0 ksi AND 35.7 ksi FOR 6005-T5 ALLOY.

7. SEE THE FOLLOWING SHEETS FOR ANCHOR SPECIFICATIONS: HV BLADE ① : 12,13,14,15 AND 20

   HV BLADE ① & ⑯ WORKING IN UNISON: 12, 13 & 15

8. THIS BERTHA H.V. ACCORDION SHUTTER SYSTEM BEARS A U.S. PATENT #6'779,582. COMPONENTS OF THIS APPROVAL ARE COVERED, IN WHOLE OR IN PART BY U.S. PATENT #5'458,179 ISSUED TO EASTERN METAL SUPPLY, INC.

9. IT SHALL BE THE RESPONSIBILITY OF THE CONTRACTOR TO VERIFY THE SOUNDNESS OF THE STRUCTURE WHERE SHUTTER IS TO BE ATTACHED TO INSURE PROPER ANCHORAGE. CONTRACTOR TO SEAL/CAULK ALL SHUTTER COMPONENT EDGES WHICH REMAIN, THRU FASTENING IN CONTINUOUS CONTACT WITH THE BUILDING TO PREVENT WIND/RAIN INTRUSION.

10. EACH UNIT MUST BEAR PERMANENT LABEL IN A VISIBLE PLACE WITH WARNING NOTE: DURING PERIODS OF HURRICANE WARNINGS HOME OWNER, TENANT, OR OTHERS, MUST PROPERLY CLOSE ALL HV AND HD CENTERMATES AND ENGAGE OR LOCK ALL HV AND HD LOCKS.

11. SHUTTER MANUFACTURER'S LABEL SHALL BE LOCATED ON A READILY VISIBLE LOCATION AT ACCORDION SHUTTER IN ACCORDANCE WITH TEXAS DEPARMENT OF INSURANCE REQUIREMENTS. ONE LABEL SHALL BE PLACED FOR EVERY OPENING.

12. BERTHA H.V. ACCORDION SHUTTER SYSTEM'S INSTALLATION SHALL COMPLY WITH SPECS INDICATED IN THIS DRAWING PLUS ANY BUILDING AND ZONING REGULATIONS PROVIDED BY THE JURISDICTION WHERE PERMIT IS APPLIED TO.

13. (a) THIS P.E.D. PREPARED BY THIS ENGINEER IS GENERIC AND DOES NOT PROVIDE INFORMATION FOR A SITE SPECIFIC PROJECT; i.e. WHERE THE SITE CONDITIONS DEVIATE FROM THE P.E.D.

    (b) CONTRACTOR TO BE RESPONSIBLE FOR THE SELECTION, PURCHASE AND INSTALLATION INCLUDING LIFE SAFETY OF THIS PRODUCT, BASED ON THIS P.E.D., PROVIDED HE/SHE DOES NOT DEVIATE FROM THE CONDITIONS DETAILED ON THIS DOCUMENT. CONSTRUCTION SAFETY AT SITE IS THE CONTRACTOR'S RESPONSIBILITY.

    (c) THIS P.E.D. WILL BE CONSIDERED INVALID IF ALTERED BY ANY MEANS.

    (d) SITE SPECIFIC PROJECTS SHALL BE PREPARED BY A PROFESSIONAL ENGINEER OR REGISTERED ARCHITECT WHICH WILL BECOME THE ENGINEER OF RECORD (E.O.R.) FOR THE PROJECT AND WHO WILL BE RESPONSIBLE FOR THE PROPER USE OF THE P.E.D. ENGINEER OF RECORD, ACTING AS A DELEGATED ENGINEER TO THE P.E.D. ENGINEER SHALL SUBMIT TO THIS LATTER THE SITE SPECIFIC DRAWINGS FOR REVIEW.

    (e) THIS P.E.D. SHALL BEAR THE DATE AND ORIGINAL SEAL AND SIGNATURE OF THE PROFESSIONAL ENGINEER OF RECORD THAT PREPARED IT.

TABLE OF CONTENTS

AREA 1: HV BLADES ① & ⑯

GENERAL NOTES		SHEET 1
SYSTEM COMPONENTS	1-20	SHEET 2
SYSTEM COMPONENTS	21-37	SHEET 3
TYPICAL SHUTTER ASSEMBLY	38-44	SHEET 4
TYPICAL WINDOW BLADE & WINDOW DETAIL		

AREA 2: HV BLADE ① AND HV WINDOW BLADE ⑯ (WHERE APPLICABLE)

TYPICAL SHUTTER ELEVATION & NOTES ON LOCKS	SHEET 5
INSTALLATION DETAILS A-F, CONCRETE/BLOCK	SHEET 6
INSTALLATION DETAILS G-M, CONCRETE/BLOCK	SHEET 7
CENTERMATE DETAILS HV	SHEET 8
CENTERMATE ALTERNATING DETAILS HV	SHEET 9
END CONNECTION DETAILS 1-6, CONCRETE/BLOCK	SHEET 10
MAXIMUM SPAN TABLES	SHEET 11
ANCHOR SCHEDULE- CONCRETE & BLOCK	SHEET 12
ANCHOR SCHEDULE- CONCRETE & BLOCK	SHEET 13
ANCHOR SCHEDULE- CONCRETE & BLOCK	SHEET 14
ANCHOR SCHEDULE- WOOD	SHEET 15
INSTALLATION DETAILS M-R, WOOD	SHEET 16
INSTALLATION DETAILS S-X, WOOD	SHEET 17
END CONNECTION DETAILS 7-12 & X, WOOD	SHEET 18

AREA 3: HV WINDOW BLADE ⑯ ONLY

TYPICAL SHUTTER ELEVATION	SHEET 19

AREA 4: HV WINDOW BLADE ① ONLY

INSTALLATION DETAILS, METAL STUD WALLS	SHEET 20

TEXAS DEPARTMENT OF INSURANCE - 2006

STATE OF TEXAS
7/6/14
WALTER A. TILLIT, JR.
83801
LICENSED PROFESSIONAL ENGINEER

P.E. SEAL/SIGNATURE/DATE

WALTER A. TILLIT Jr. P.E.
PROFESSIONAL ENGINEER

6355 N.W. 36 STREET, STE. 305
VIRGINIA GARDENS, FL 33166
PHONE (305) 871-1530 FAX (305) 871-1531

TEXAS LIC. # 90691

FIRM REGISTRATION # F-13790

A.S.S.A.
American Shutter Systems Association, Inc.
4268 Westroads Drive
West Palm Beach, FL 33407

© 2012 EASTERN METAL SUPPLY, INC.

BERTHA HV™
Accordion Shutter System
H.V. BLADE #1 W/ OR W/O H.V. WINDOW BLADE

REV. No	DESCRIPTION	DATE
1	NOTE 1 (TEST REPORT)	02/14/14
2		
3		
4		
5		
6		

DRAWN BY: A.G.
DATE: 11/03/12
DRAWING No 12-169
SHEET 1 OF 20

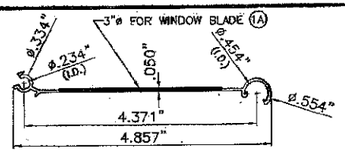

(1) HV SOLID BLADE

COVERED UNDER US PATENT # 5458179

(1A) HV WINDOW BLADE*

*SEE LIMITATIONS OF USE OF BLADE (1A) ON SHEET 19

6063–T6 ALLOY AND TEMPER

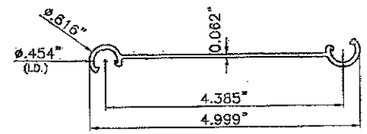

(3) HV UNIVERSAL FLOATER

QUALIFIED FOR USE W/ HV BLADE (1)

6005–T5 ALLOY AND TEMPER

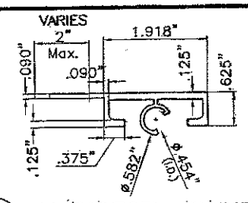

(4) HV DIRECT MOUNT

QUALIFIED FOR USE W/ HV BLADE (1)

6063–T6 ALLOY AND TEMPER

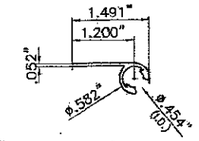

(5) HV 90°/180° STARTER

QUALIFIED FOR USE W/ HV BLADE (1)

6063–T6 ALLOY AND TEMPER

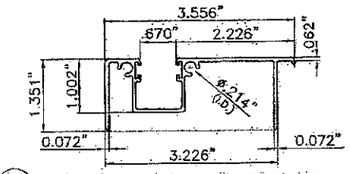

(6) HV ADJ. FLOOR TRACK

QUALIFIED FOR USE W/ HV BLADE (1)

6063–T6 ALLOY AND TEMPER

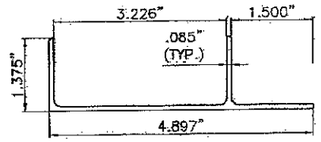

(7) HV ADJ. ADAPTER W/LIP

QUALIFIED FOR USE W/ HV BLADE (1)

6063–T6 ALLOY AND TEMPER

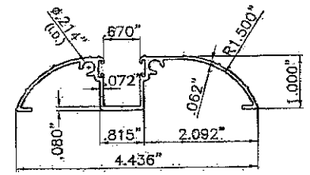

(8) HV WALK–OVER TRACK

QUALIFIED FOR USE W/ HV BLADE (1)

6063–T6 ALLOY AND TEMPER

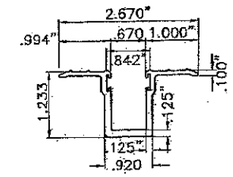

(9) HV TRENCH TRACK

QUALIFIED FOR USE W/ HV BLADE (1) ONLY.

6063–T6 ALLOY AND TEMPER

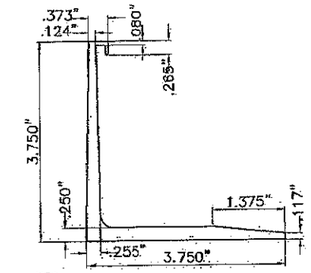

(10) HV RAINGUARD

QUALIFIED FOR USE W/ HV BLADE (1)

6063–T6 ALLOY AND TEMPER

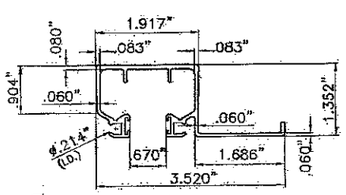

(11) HV CEILING HEADER

QUALIFIED FOR USE W/ HV BLADE (1) ONLY, SEE SECTIONS FOR VALIDITY.

6063–T6 ALLOY AND TEMPER

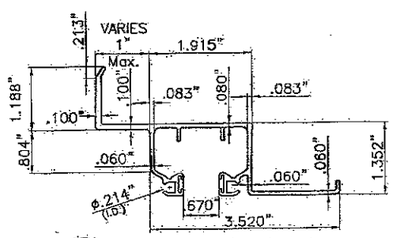

(12) HV HEADER/SILL

QUALIFIED FOR USE W/ HV BLADE (1) ONLY

6063–T6 ALLOY AND TEMPER

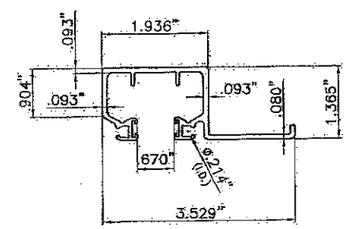

(13) HD CEILING HEADER/SILL

QUALIFIED FOR USE W/ HV BLADE (1)

SEE SECTIONS FOR VALIDITY.

6063–T6 ALLOY AND TEMPER

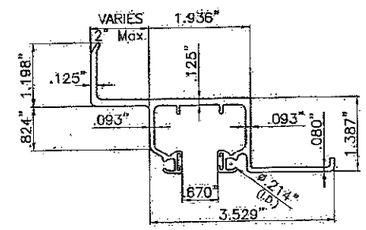

(14) HD WALL HEADER/SILL

QUALIFIED FOR USE W/ HV BLADE (1) ONLY.

6063–T6 ALLOY AND TEMPER

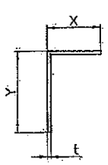

MIN. X	MIN. Y	MIN. t
1"	1"	0.062"

(16) SIDE ANGLES

QUALIFIED FOR USE W/ HV BLADE (1)

6063–T6 ALLOY AND TEMPER

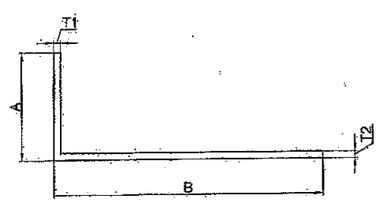

ALUMINUM ANGLES

QUALIFIED FOR USE W/ HV BLADE (1) ONLY.

6063–T6 ALLOY AND TEMPER

COMPONENT	A	B	T1	T2
(17)	2"	5" MAX.	1/8"	1/8"
(18)	2"	5" MAX.	0.192"	0.192"
(19)	2.5"	7" MAX.	0.190"	0.190"
(5A)	2"	5" MAX.	0.139"	0.131"

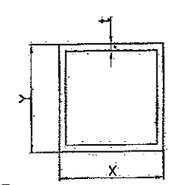

X	Y	t
2"	2"	0.125"
3"	3"	0.090"

(20) CORNER POSTS

QUALIFIED FOR USE W/ HV BLADE (1)

6063–T6 ALLOY AND TEMPER

TEXAS DEPARTMENT OF INSURANCE – 2006

P.E. SEAL/SIGNATURE/DATE

WALTER A. TILLIT Jr. P.E.
PROFESSIONAL ENGINEER

6355 N.W. 36 STREET, STE. 305
VIRGINIA GARDENS, FL 33166
PHONE (305) 871–1530 FAX (305) 871–1531

TEXAS LIC. # 90691

FIRM REGISTRATION # F–13790

A.S.S.A.
American Shutter Systems Association, Inc.
4268 Westroads Drive
West Palm Beach, FL 33407

© 2012 EASTERN METAL SUPPLY, INC.

BERTHA HV™
Accordion Shutter System
H.V. BLADE #1 W/ OR W/O H.V. WINDOW BLADE

REV. No	DESCRIPTION	DATE
1		
2		
3		
4		
5		
6		

DRAWN BY: A.G.
DATE: 11/03/12
DRAWING No 12–169
SHEET 2 OF 20

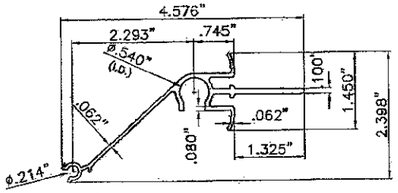

(21) HV CENTERMATE

QUALIFIED FOR USE W/ HV BLADE (1) & (1A) ONLY
6063-T6 ALLOY AND TEMPER

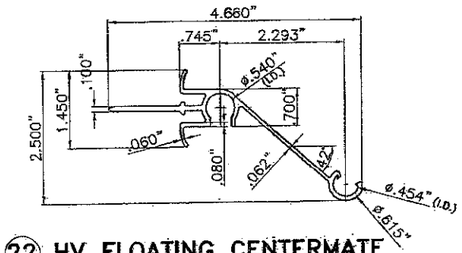

(22) HV FLOATING CENTERMATE

QUALIFIED FOR USE W/ HV BLADE (1) & (1A) ONLY
6063-T6 ALLOY AND TEMPER

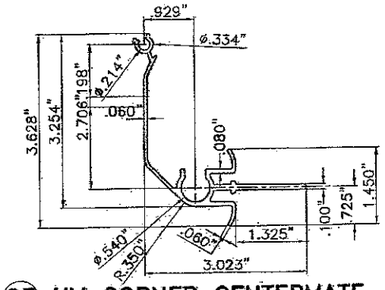

(23) HV CORNER CENTERMATE

QUALIFIED FOR USE W/ HV BLADE (1) ONLY
6063-T6 ALLOY AND TEMPER

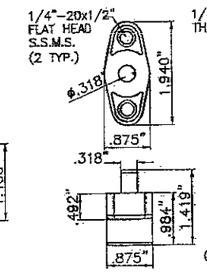

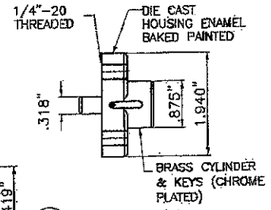

(24) HV LOCK

QUALIFIED FOR USE W/ HV BLADE (1) & (1A) ONLY.

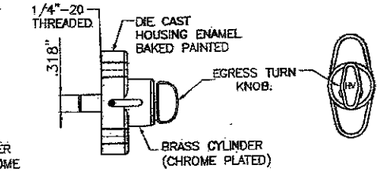

(25) HV EGRESS LOCK

QUALIFIED FOR USE W/ HV BLADE (1) & (1A) ONLY.

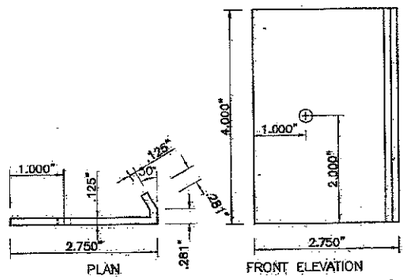

(27) LOCKER FOR "T" LOCK CENTERMATE

QUALIFIED FOR USE W/ HV BLADE (1) ONLY
6063-T6 ALLOY AND TEMPER

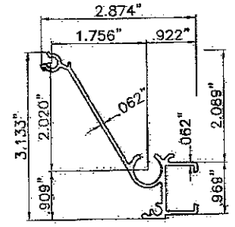

(28) HV MALE "T" LOCK CENTERMATE

QUALIFIED FOR USE W/ HV BLADE (1) ONLY
6063-T6 ALLOY AND TEMPER

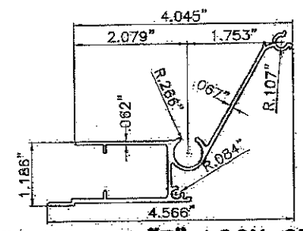

(29) HV FEMALE "T" LOCK CENTERMATE

QUALIFIED FOR USE W/ HV BLADE (1) ONLY
6063-T6 ALLOY AND TEMPER

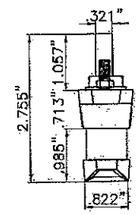

(30) HV "T" LOCK

QUALIFIED FOR USE W/HV BLADE (1) ONLY.

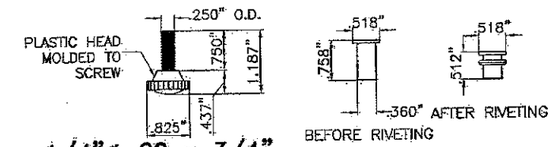

1/4"ø-20 x 3/4" S.S. THUMBSCREW **1/4"ø-20 RIVNUT***

* SERIES 9444 ALUMINUM (2024-T3 ALLOY) LARGE FLANGE THIN SHEET NUTSERT, PART # 0820, AS MANUFACTURED BY AVDEL CHERRY TEXTORN, PARSIPPENY, NEW JERSEY 07054 OR EQUAL.

(26) HV ALTERNATIVE LOCK

QUALIFIED FOR USE W/ HV BLADE (1) ONLY.

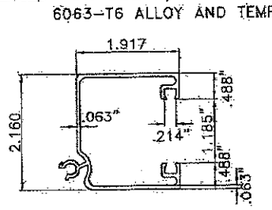

(31) HD CENTERMATE W/ NO LOCKING ROD

QUALIFIED FOR USE W/ HV BLADE (1) & (1A)
6063-T6 ALLOY AND TEMPER

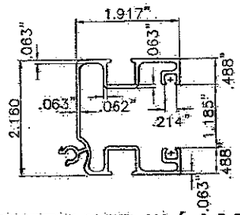

(32) HD CENTERMATE W/ LOCKING ROD

QUALIFIED FOR USE W/ HV BLADE (1) & (1A)
6063-T6 ALLOY AND TEMPER

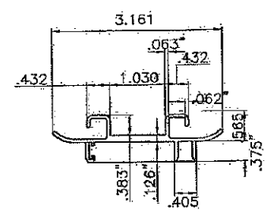

(33) HD CENTERMATE'S INSERT

QUALIFIED FOR USE W/ HV BLADE (1) & (1A)
6063-T6 ALLOY AND TEMPER

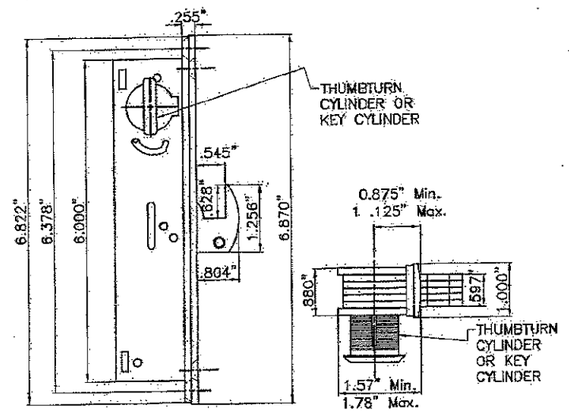

(34) HD LOCK

BY REGENT HARDWARE MORTISE LOCKS SERIES 2333 HOOK BOLT LOCK.
QUALIFIED FOR USE W/ HV BLADE (1) & (1A)

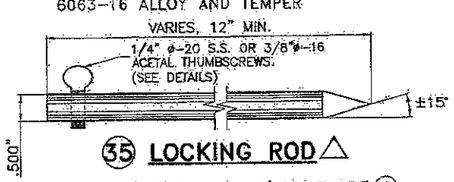

(35) LOCKING ROD △

QUALIFIED FOR USE W/ HV BLADE (1)
6063-T6 ALLOY AND TEMPER

△ (35) INSTALLATION WILL REQUIRE A 7/16" HOLE DRILLED AT TRACKS FOR PROPER EMBEDMENT

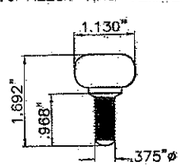

(36) HV 3/8"ø-16 ACETAL THUMBSCREWS

QUALIFIED FOR USE W/ HV BLADE (1)

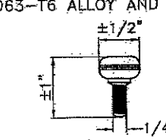

(37) HV 1/4" ø-20 AISI 304 SERIES S.S. THUMBSCREWS

QUALIFIED FOR USE W/ HV BLADE (1)

TEXAS DEPARTMENT OF INSURANCE - 2006

© 2012 EASTERN METAL SUPPLY, INC.

STATE OF TEXAS
7/6/14

P.E. SEAL/SIGNATURE/DATE

WALTER A. TILLIT Jr. P.E.
PROFESSIONAL ENGINEER

6355 N.W. 36 STREET, STE. 305
VIRGINIA GARDENS, FL 33166
PHONE (305) 871-1530 FAX (305) 871-1531

TEXAS LIC. # 90691

FIRM REGISTRATION # F-13790

A.S.S.A.
American Shutter Systems Association, Inc.
4268 Westroads Drive
West Palm Beach, FL 33407

BERTHA HV™
Accordion Shutter System
H.V. BLADE #1 W/ OR W/O H.V. WINDOW BLADE

REV. No	DESCRIPTION	DATE	DRAWN BY: A.G. DATE: 11/03/12
1			
2			DRAWING No 12-169
3			
4			
5			SHEET 3 OF 20
6			

SHUTTER ASSEMBLY SCHEDULE FOR HV (1), HV (1A)	
(1)	HV BLADE 1
(1A)	HV BLADE 1A
(38)	HV LONG RECESSED NYLON BUSHING
(39)	HV SHORT RECESSED NYLON BUSHING
(40)	HV NYLON HAT WASHER
(41)	HV WHEEL CARRIAGE AISI 302–303 SERIES ø.870"x3/16" THICK NYLON WHEEL. 0.188"ø AISI 302 SERIES S.S. RIVETS
(42)	HV 1 3/4" ACCORDION PIN W/ #8 HEAD *
(43)	HV 2 3/4" ACCORDION PIN W/ #8 HEAD *
(44)	POLYCARBONATE IMPACT RESISTANT HV WINDOW

*** HV PIN REQUIREMENTS AT EXTERIOR BLADE KNUCKLE FOR HV (1) HV (1A)**

(1) HV PIN (43) SHALL ALWAYS BE USED AT ALL EXTERIOR BOTTOM KNUCKLES OF HV ACCORDION SYSTEM W/ HV (1) OR HV (1A) BLADE.

(2) HV PIN (42) MAY BE USED IN LIEU OF (43) AND ONLY AT EXTERIOR BOTTOM KNUCKLES OF HV ACCORDION SYSTEM W/ HV (1) BLADE WHEN CORRESPONDING TO INSTALLATION "11", SHEET 7.

(3) HV PIN (42) OR (43) W/ 1/2" O.D. 1/16" THICK S.S. WASHER SHALL BE USED FOR DIRECT MOUNT INSTALLATION PER DETAIL X, SHEET (10)

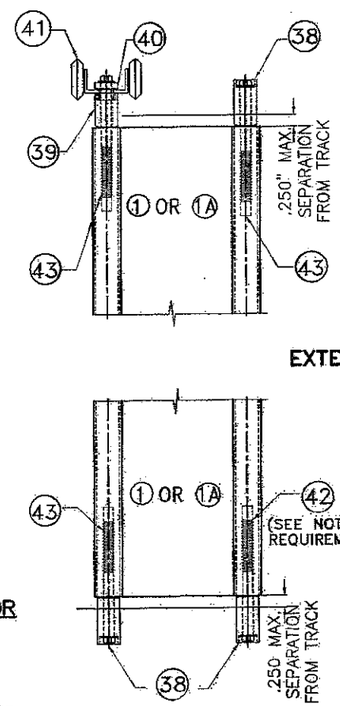

TYPICAL SHUTTER ASSEMBLY
N.T.S.

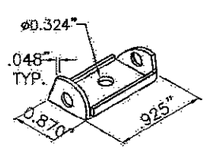

WHEEL CARRIAGE DETAIL
N.T.S.

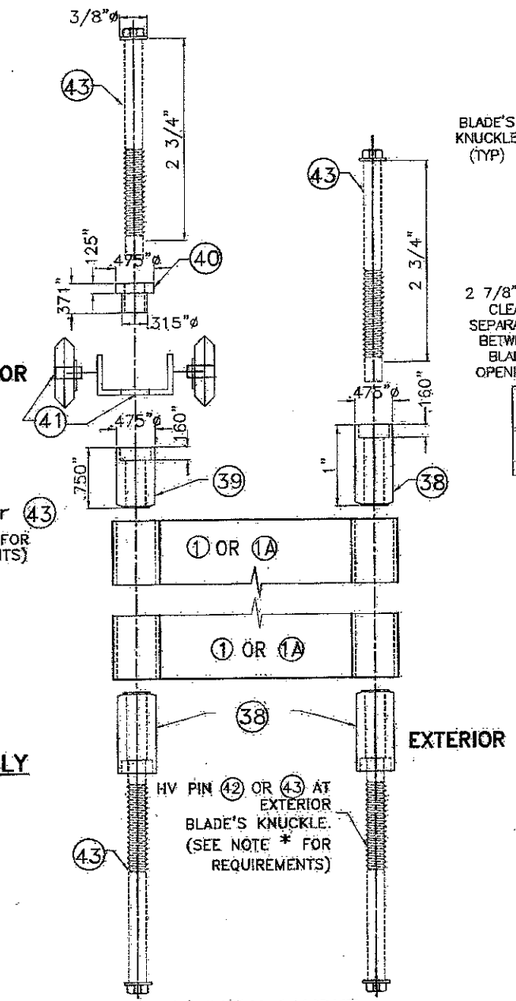

ASSEMBLY LAYOUT
N.T.S.

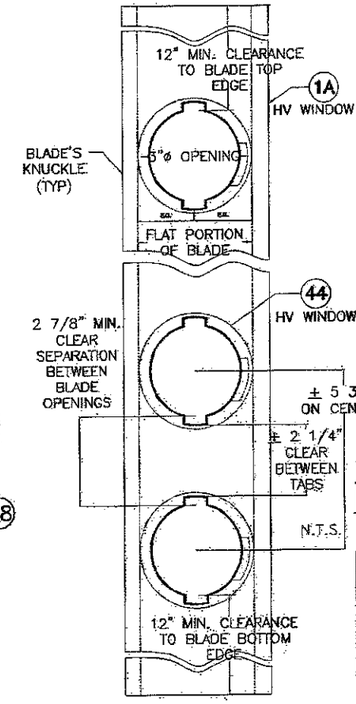

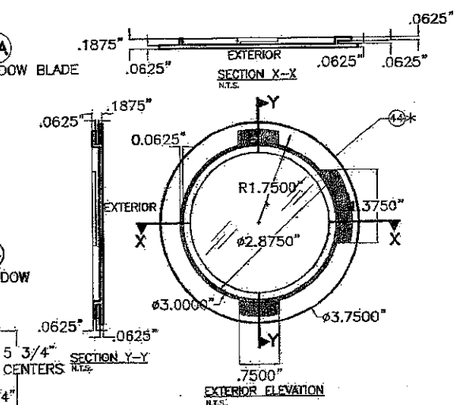

TYPICAL HV WINDOW BLADE (1A) AND POLYCARBONATE HV WINDOW DETAIL

* POLYCARBONATE IMPACT RESISTANT HV WINDOW BAYER MAKROLON 3103 POLYCARBONATE RESINS, UV–STABILIZED GRADE OR SABIC INNOVATIVE PLASTIC LEXAN 103 RESIN (SEE NOTE "F" ON SHEET 19).

POLYCARBONATE SOURCES FOR (44)			
TYPICAL PROPERTIES	APPLICABLE STANDARD REFERENCE	RESULT: BAYER MATERIAL / SCIENCE LLC MAKROLON 3103	RESULT: SABIC INNOVATIVE PLASTIC LEXAN 103 RESIN
PHYSICAL:			
SPECIFIC GRAVITY	ASTM D792	0.043 lb/in³	0.043 lb/in³
MECHANICAL:			
TENSILE YIELD STRENGTH	ASTM D638	9,400 p.s.i.	9,500 p.s.i.
FLEXURAL STRENGTH AT YIELD	ASTM D790	12,500 p.s.i.	13,400 p.s.i.
FLEXURAL MODULUS	ASTM D790	340,000 p.s.i.	345,000 p.s.i.
IMPACT:			
NOTCHED IZOD	ASTM D256	18 FT–lb/in	17 FT–lb/in
FIRE BURNING CHARACTERISTICS:			
SMOKE DENSITY	ASTM D2843	47.2 %	64.5 % MAX
RATE OF BURNING	ASTM D635	C–1 CLASS	C–1 CLASS
SELF IGNITION	ASTM D1929	1040 °F	980 °F
WEATHERING:	ASTM G155		
TENSILE STRENGTH AFTER WEATHERING	ASTM 638	9302 p.s.i.	8840 p.s.i.
TENSILE STRESS BEFORE WEATHERING	ASTM 638	8461 p.s.i.	8880 p.s.i.

(1) HV BLADE SOLID & (1A) HV WINDOW BLADE DETAILS
N.T.S.

TEXAS DEPARTMENT OF INSURANCE – 2006

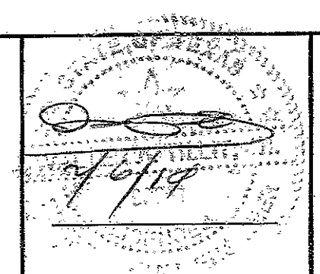

P.E. SEAL/SIGNATURE/DATE

WALTER A. TILLIT Jr. P.E.
PROFESSIONAL ENGINEER
6355 N.W. 36 STREET, STE. 305
VIRGINIA GARDENS, FL 33166
PHONE (305) 871–1530 FAX (305) 871–1531
TEXAS LIC. # 90691
FIRM REGISTRATION # F–13790

A.S.S.A.
American Shutter Systems Association, Inc.
4268 Westroads Drive
West Palm Beach, FL 33407

© 2012 EASTERN METAL SUPPLY, INC.

BERTHA HV™
Accordion Shutter System
H.V. BLADE #1 W/ OR W/O H.V. WINDOW BLADE

REV. No	DESCRIPTION	DATE
1		
2		
3		
4		
5		
6		

DRAWN BY: A.G.
DATE: 11/03/12
DRAWING No 12–169
SHEET 4 OF 20

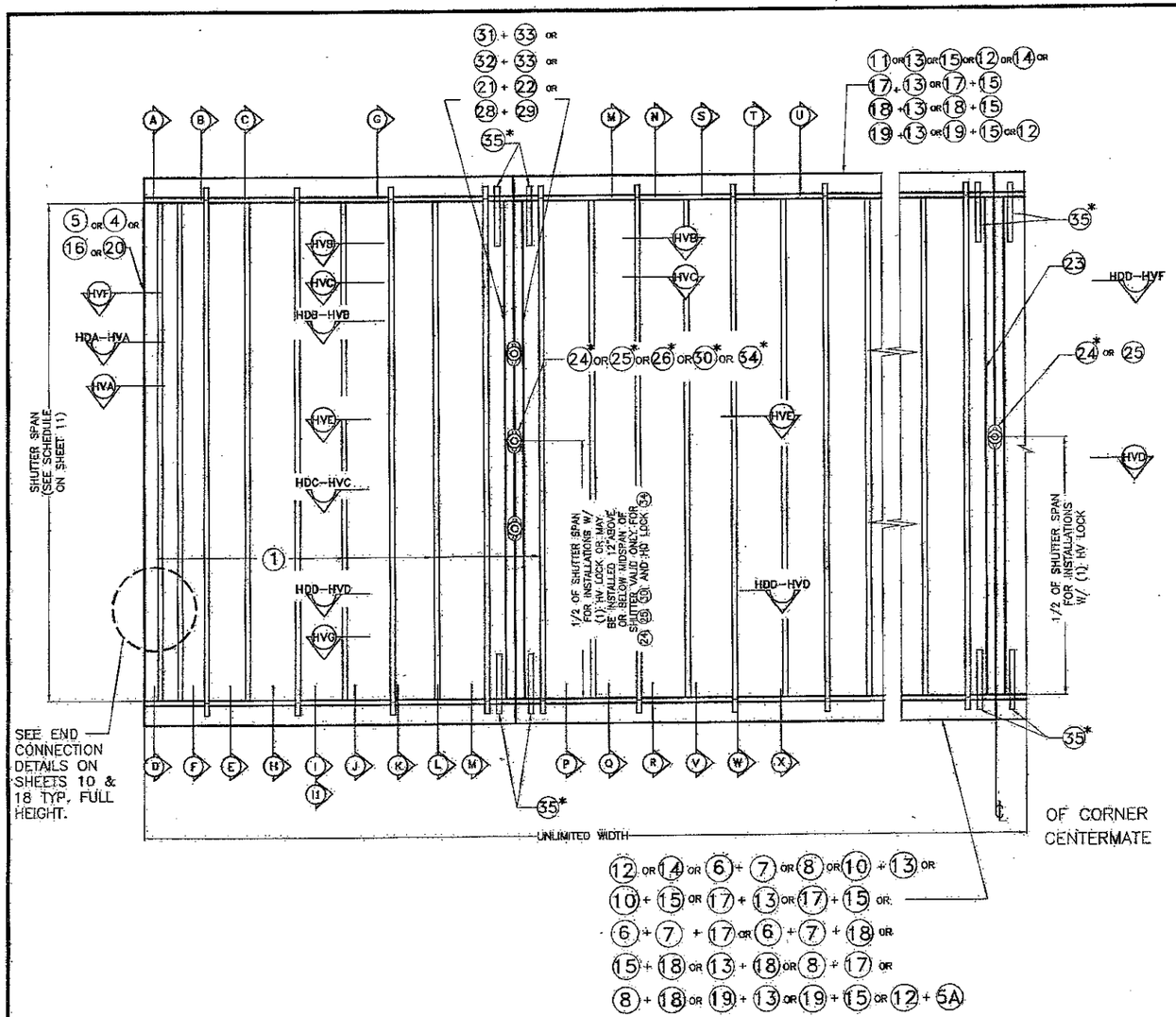

TYPICAL 1 HV BLADE SHUTTER ELEVATION

N.T.S.

* NOTES ON HV LOCKS AND CENTERMATES:

1. **MANDATORY CONDITION #1:** ONE HV LOCK 24 or 25 SHALL BE USED AT 1/2 OF SHUTTER SPAN FOR ANY SPAN OR 12" ABOVE OR BELOW 1/2 OF SHUTTER SPAN FOR SPANS UP TO 105", AND FOR INSTALLATIONS AT ANY ELEVATION. HV LOCK 24 or 25 MAY BE USED AS AN INSIDE OR OUTSIDE LOCK, ATTACHED TO 21 OR 22 CENTERMATES W/(2) 1/4"ø–20 x 1/2" LONG FLAT HEAD S.S. M.S. LOCATION OF LOCK SHALL BE AS INDICATED ON TYPICAL SHUTTER ELEVATION.

2. **OPTIONAL CONDITION #1:** IF DESIRED, FOR BETTER PERFORMANCE OR FOR SECURITY PURPOSES, UP TO TWO HV LOCKS 24 , 25 OR 26 MAY BE USED AS AN INSIDE OR OUTSIDE LOCK. CONNECTION OF LOCKS TO CENTERMATES 21 OR 22 SHALL BE AS INDICATED ON NOTE (1) ABOVE.
LOCATION OF LOCKS SHALL BE AS INDICATED ON TYPICAL SHUTTER ELEVATION.

3. **OPTIONAL CONDITION #2 (VALID ONLY WHEN MANDATORY CONDITION #1 OR LIMITED MANDATORY CONDITION #2 IS USED W/TWO H.V. LOCKS):** LOCKING RODS 35 ARE NOT REQUIRED AT HURRICANE POSITION, BUT MAY BE USED IF DESIRED TO ENHANCE SHUTTER PERFORMANCE. LOCKING RODS 35 OR AN ALTERNATIVE DEVICE MAY ALSO BE USED AT STACKING POSITION (NON HURRICANE POSITION).

4. **MANDATORY CONDITION #2:** ONE HV LOCK 24 or 25 SHALL BE USED AT CORNER CENTERMATES FOR ANY SPAN AND INSTALLATIONS AT ANY ELEVATION. HV LOCK 24 or 25 SHALL BE USED AS AN OUTSIDE OR INSIDE LOCK, ATTACHED TO 23 CORNER CENTERMATE W/(2) 1/4"ø–20 x 1/2" LONG FLAT HEAD S.S. M.S. TWO LOCKING RODS 35 AT TOP & BOTTOM SHALL BE USED. LOCATION OF LOCK SHALL BE AS INDICATED ON TYPICAL SHUTTER ELEVATION. MAXIMUM SHUTTER SPAN SHALL BE DETERMINED AS PER SCHEDULES SHOWN ON SHEET 12.

5. **FIRST ALTERNATE TO MANDATORY CONDITION #1 VALID ONLY FOR HV LOCK 26 W/ SYMMETRICAL CENTERMATES 21 OR 22 :** ONE ALTERNATE HV LOCK 26 MAY BE USED IN LIEU OF HV LOCK 24 or 25 FOR ANY SPAN AND INSTALLATIONS AT ANY ELEVATION. ALTERNATE LOCK 26 MAY BE USED AS AN INSIDE OR OUTSIDE LOCK. ATTACHMENT OF 1/4"ø–20x3/4" S.S. THUMBSCREW TO 21 OR 22 CENTERMATES SHALL BE MADE W/ 1/4"ø–20x3/4" ALUM. RIVNUT AS SHOWN ON SECTION HVE, SHEET 8. ONE LOCK SHALL BE USED AT 1/2 OF SHUTTER SPAN OR TWO LOCKS AT 1/3 OF SHUTTER SPAN.

6. **MANDATORY CONDITION #3 FOR KEYSTONE MOUNTING INSTALLATIONS:** ONE HV LOCK 24 or 25 or 26 SHALL BE USED AT 1/2 OF SHUTTER SPAN FOR ANY SPAN OR 12" ABOVE OR BELOW 1/2 OF SHUTTER SPAN FOR SPANS UP TO 96", AND FOR INSTALLATIONS AT ANY ELEVATION. HV LOCK 24 or 25 or 26 MAY BE USED AS AN INSIDE OR OUTSIDE LOCK, ATTACHED TO 21 or 22 SYMMETRICAL CENTERMATES W/ (2) 1/4"–20 x 1/2" LONG FLAT HEAD S.S. M.S. LOCATION OF LOCK SHALL BE AS INDICATED ON TYPICAL SHUTTER ELEVATION. USE OF LOCKING RODS 35 W/ 36 OR 37 TOP AND BOTTOM IS COMPLETELY MANDATORY.

*NOTES ON HV "T" LOCKS AND CENTERMATES:

1. **SECOND ALTERNATE TO MANDATORY CONDITION #1 VALID ONLY FOR HV "T" LOCK 30 , AND CENTERMATES 28 AND 29 :** ONE ALTERNATE HV "T" LOCK 30 MAY BE INSTALLED IN LIEU OF HV LOCKS 24 OR 25 FOR ANY SPAN AND INSTALLATION AT ANY ELEVATION. ALTERNATE LOCK 30 MAY BE USED AS AN INSIDE OR OUTSIDE LOCK. ATTACHMENT OF LOCK 30 INCLUDES USING REINFORCING LOCKER 27 , AS SHOWN ON SECTION HVG, SHEET 9, WHICH MUST BE CONNECTED TO CENTERMATES 28 AND 29 W/ 1/4"ø–20 x 1 1/2" LONG S.S. THREADED BOLT W/ 7/8"ø x 3/32" WINGNUT OR W/ 1/4"ø–20x1" S.S.M.S. INTO A 1/4"øx 5/8" RIVNUT. LOCK MAY BE INSTALLED AT MIDSPAN OR 12" MAXIMUM ABOVE AND BELOW MIDSPAN. USE OF TWO LOCKING RODS 35 TOP AND BOTOM IS MANDATORY.

*NOTES ON HD LOCKS & CENTERMATES:

1. **HD LOCK 34 W/ HD CENTERMATES 31 OR 32 W/ 33 :** ONE ALTERNATE HD LOCK 34 MAYBE USED IN LIEU OF HV LOCKS 24 OR 25 FOR ANY SPAN AND INSTALLATIONS AT ANY ELEVATION. ALTERNATE HD LOCK 34 MAY BE USED AS AN INSIDE OR OUTSIDE LOCK. ATTACHMENT OF HD LOCK 34 TO 33 IS W/ 3 #8 x 3/8" F.H. S.S.M.S., AND INCLUDES REINFORCEMENT INSERT 33 AS SHOWN ON SECTIONS HDB–HVB AND HDC–HVC, SHEET 10. LOCK MAY BE INSTALLED AT MIDSPAN OR 12" MAXIMUM BELOW OR ABOVE MIDSPAN. USE OF LOCKING RODS 35 IS COMPLETELY OPTIONAL.

TEXAS DEPARTMENT OF INSURANCE – 2006

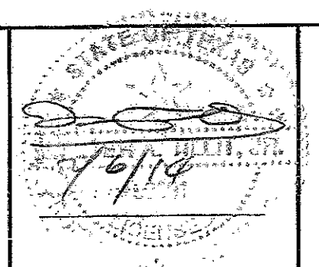

P.E. SEAL/SIGNATURE/DATE

WALTER A. TILLIT Jr. P.E.
PROFESSIONAL ENGINEER

6355 N.W. 36 STREET, STE. 305
VIRGINIA GARDENS, FL 33166
PHONE (305) 871–1530 FAX (305) 871–1531

TEXAS LIC. # 90691

FIRM REGISTRATION # F–13790

A.S.S.A.
American Shutter Systems Association, Inc.
4268 Westroads Drive
West Palm Beach, FL 33407

© 2012 EASTERN METAL SUPPLY, INC.

BERTHA HV™
Accordion Shutter System
H.V. BLADE #1 W/ OR W/O H.V. WINDOW BLADE

REV. No	DESCRIPTION	DATE	DRAWN BY: A.G.
1			DATE: 11/03/12
2			DRAWING No
3			12–169
4			
5			SHEET
6			5 OF 20

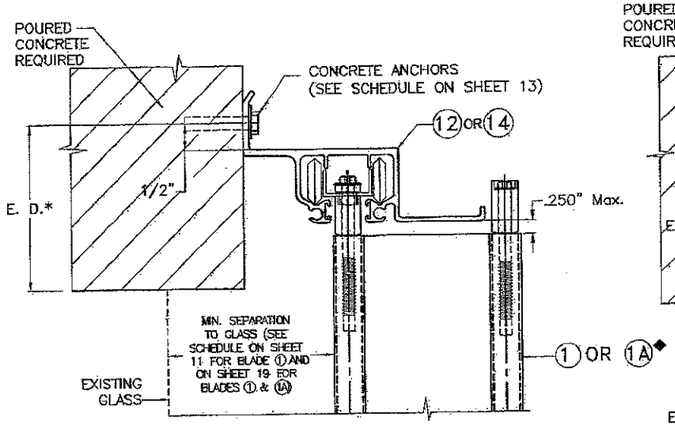

Ⓐ HV WALL HEADER INSTALLATION

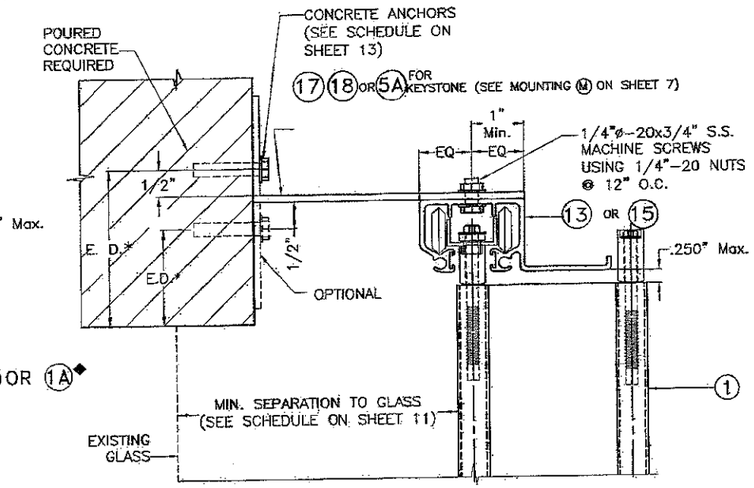

Ⓑ HV WALL HEADER INSTALLATION + KEYSTONE

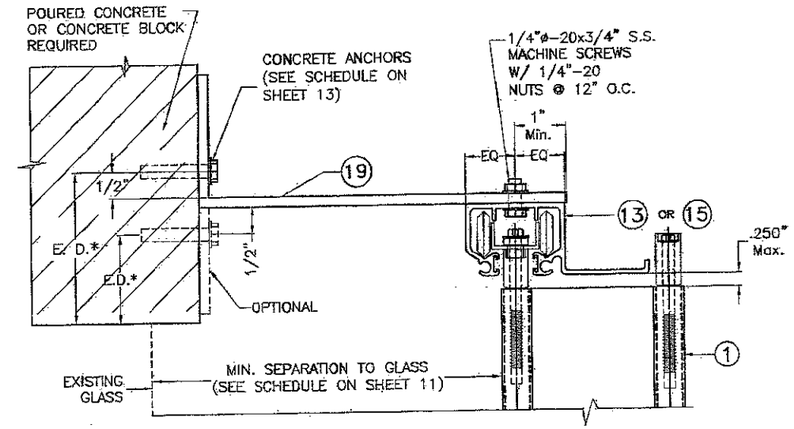

Ⓒ HV WALL HEADER INSTALLATION

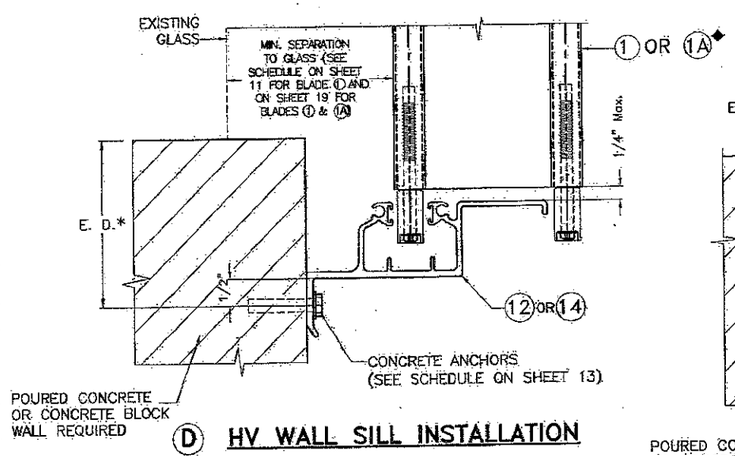

Ⓓ HV WALL SILL INSTALLATION

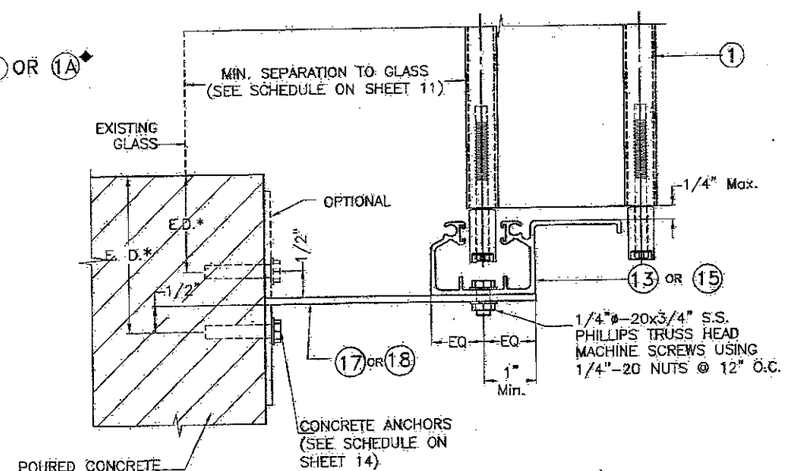

Ⓔ HV WALL SILL INSTALLATION

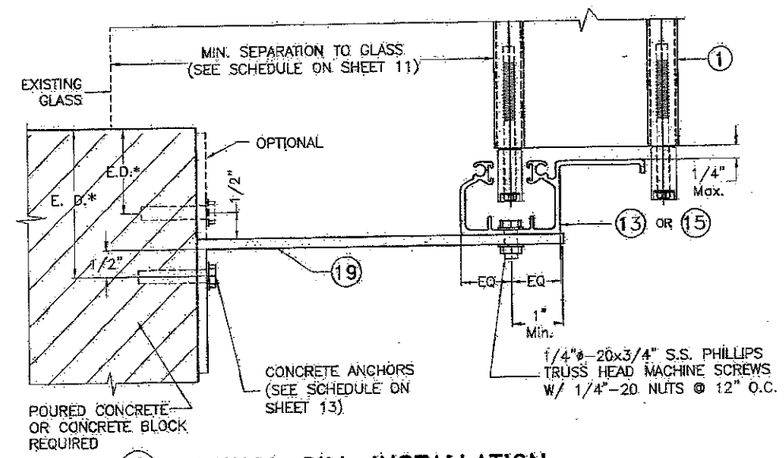

Ⓕ HV WALL SILL INSTALLATION

NOTE FOR COMBINATION OF SECTIONS:

1– SEE SHEET 4 FOR TYPICAL SHUTTER ASSEMBLY
2– MOUNTING SECTIONS CAN BE COMBINED IN ANY WAY TO SUIT ANY INSTALLATION.

* E. D. = EDGE DISTANCE (SEE SPECIFICATIONS ON SHEET 13)

◆ SEE LIMITATIONS OF USE FOR BLADE 1A ON SHEET 19

INSTALLATION DETAILS W/ 1 HV BLADE

TEXAS DEPARTMENT OF INSURANCE – 2006

© 2012 EASTERN METAL SUPPLY, INC.

P.E. SEAL/SIGNATURE/DATE

WALTER A. TILLIT Jr. P.E.
PROFESSIONAL ENGINEER
6355 N.W. 36 STREET, STE. 305
VIRGINIA GARDENS, FL 33166
PHONE (305) 871-1530 FAX (305) 871-1531
TEXAS LIC. # 90691
FIRM REGISTRATION # F-13790

A.S.S.A.
American Shutter Systems Association, Inc.
4268 Westroads Drive
West Palm Beach, FL 33407

BERTHA HV™
Accordion Shutter System
H.V. BLADE #1 W/ OR W/O H.V. WINDOW BLADE

REV. No	DESCRIPTION	DATE
1		
2		
3		
4		
5		
6		

DRAWN BY: A.G.
DATE: 11/03/12
DRAWING No 12-169
SHEET 6 OF 20

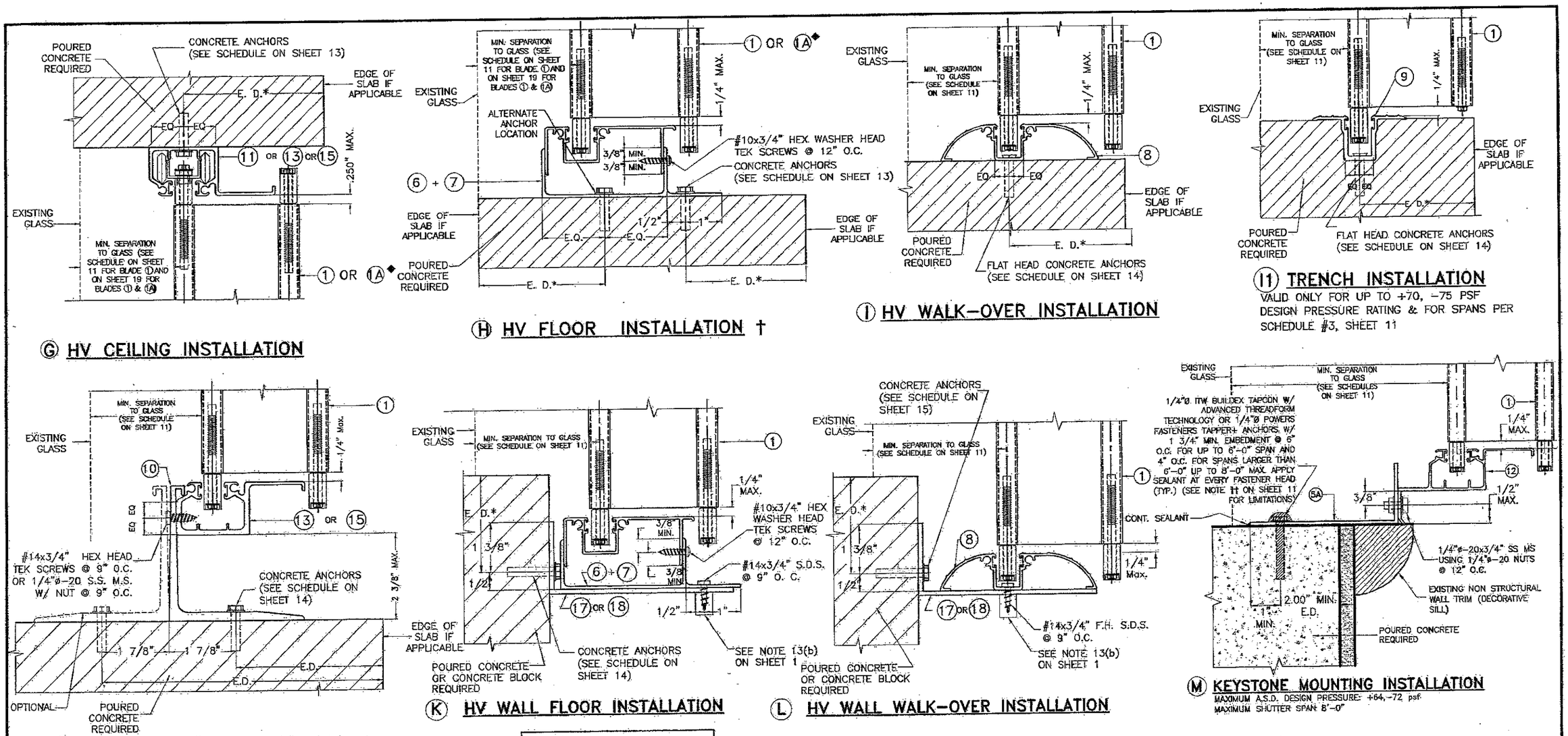

NOTE FOR COMBINATION OF SECTIONS:

1- SEE SHEET 4 FOR TYPICAL SHUTTER ASSEMBLY
2- MOUNTING SECTIONS CAN BE COMBINED IN ANY WAY TO SUIT ANY INSTALLATION.

* E. D. = EDGE DISTANCE (SEE SPECIFICATIONS ON SHEET 13)

NOTE:

† THIS INSTALLATION SHALL BE REMOVABLE WHEN PERFORMED ADJACENT TO AN OPERABLE EXIT OR ENTRANCE

◆ SEE LIMITATIONS OF USE FOR BLADE 1A ON SHEET 19

INSTALLATION DETAILS W/ 1 HV BLADE

TEXAS DEPARTMENT OF INSURANCE - 2006

STATE OF TEXAS
WALTER A. TILLIT
11/6/14

P.E. SEAL/SIGNATURE/DATE

WALTER A. TILLIT Jr. P.E.
PROFESSIONAL ENGINEER

6355 N.W. 36 STREET, STE. 305
VIRGINIA GARDENS, FL 33166
PHONE (305) 871-1530 FAX (305) 871-1531

TEXAS LIC. # 90691

FIRM REGISTRATION # F-13790

A.S.S.A.
American Shutter Systems Association, Inc.
4268 Westroads Drive
West Palm Beach, FL 33407

© 2012 EASTERN METAL SUPPLY, INC.

BERTHA HV™
Accordion Shutter System
H.V. BLADE #1 W/ OR W/O H.V. WINDOW BLADE

REV. No	DESCRIPTION	DATE
1		
2		
3		
4		
5		
6		

DRAWN BY: A.G.
DATE: 11/03/12
DRAWING No 12-169
SHEET 7 OF 20

SEE END WALL CONNECTION DETAILS ON SHEETS 10 & 18

INSTALLATIONS W/ (1) HV BLADE W/ HV CENTERMATES (21), (22) OR (23)

* SEE NOTES ON LOCKING RODS (35), HV LOCKS (24) or (25) AND ALTERNATE HV LOCK (26) ON SHEET 5.

** BLADE SLACK DETAIL HVF IS VALID FOR ALL CENTERMATES APPLICATION WITH BLADE (1)

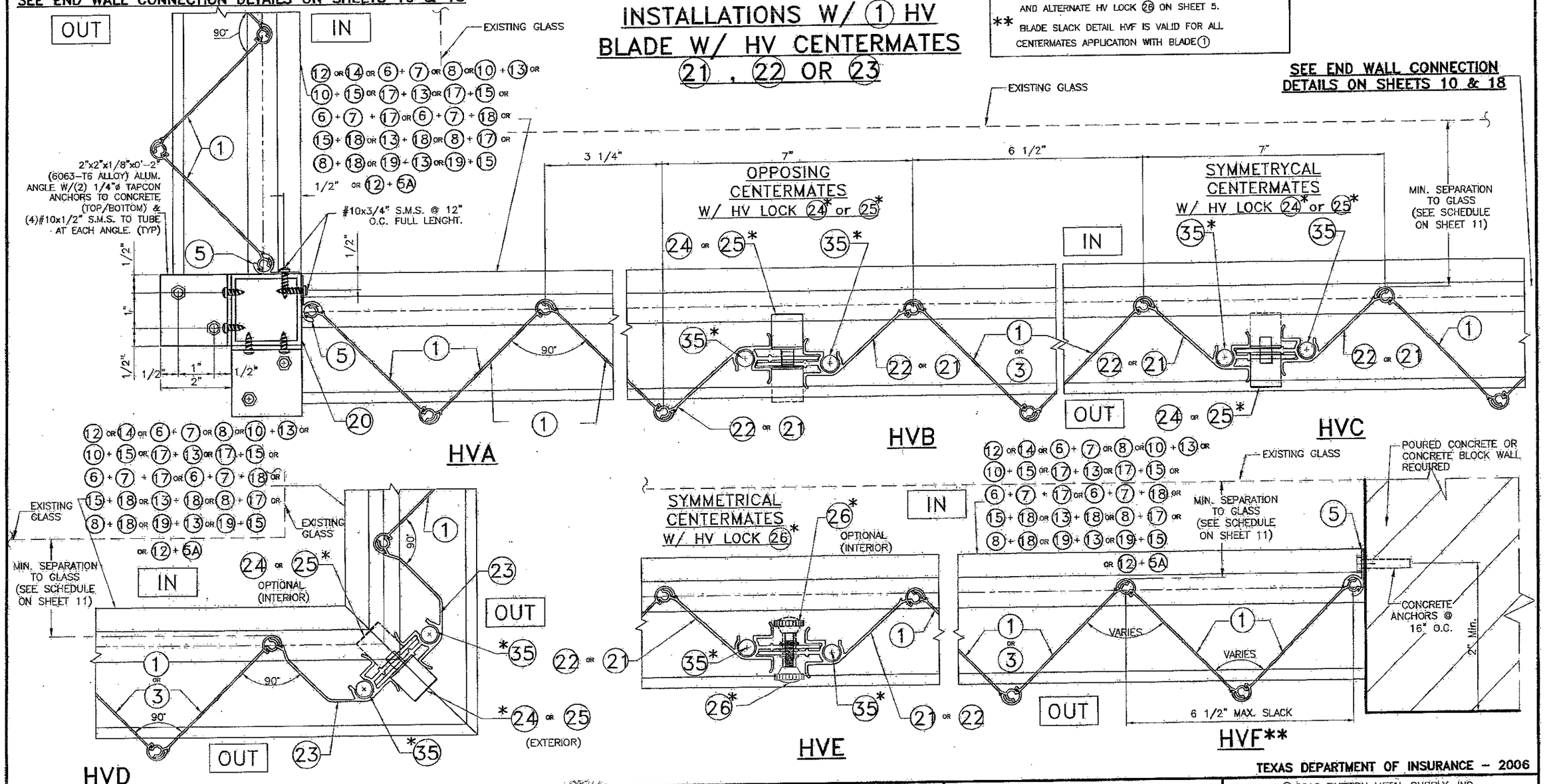

TEXAS DEPARTMENT OF INSURANCE – 2006

© 2012 EASTERN METAL SUPPLY, INC.

P.E. SEAL/SIGNATURE/DATE

WALTER A. TILLIT Jr. P.E.
PROFESSIONAL ENGINEER
6355 N.W. 36 STREET, STE. 305
VIRGINIA GARDENS, FL 33166
PHONE (305) 871-1530 FAX (305) 871-1531
TEXAS LIC. # 90691
FIRM REGISTRATION # F-13790

A.S.S.A.
American Shutter Systems Association, Inc.
4268 Westroads Drive
West Palm Beach, FL 33407

BERTHA HV™
Accordion Shutter System
H.V. BLADE #1 W/ OR W/O H.V. WINDOW BLADE

REV. No	DESCRIPTION	DATE
1		
2		
3		
4		
5		
6		

DRAWN BY: A.G.
DATE: 11/03/12
DRAWING No 12-169
SHEET 8 OF 20

ALTERNATE INSTALLATION W/HV "T" LOCK (30), HV MALE/FEMALE "T" LOCKS CENTERMATES (28), (29) & LOCKERS (27) W/ (1) HV BLADE *

SEE END CONNECTION DETAILS ON SHEETS 10 & 18

INSTALLATION (1) HV BLADE W/ HD CENTERMATES (31), (32), (33)

SEE END WALL CONNECTION DETAILS ON SHEETS 10 & 18

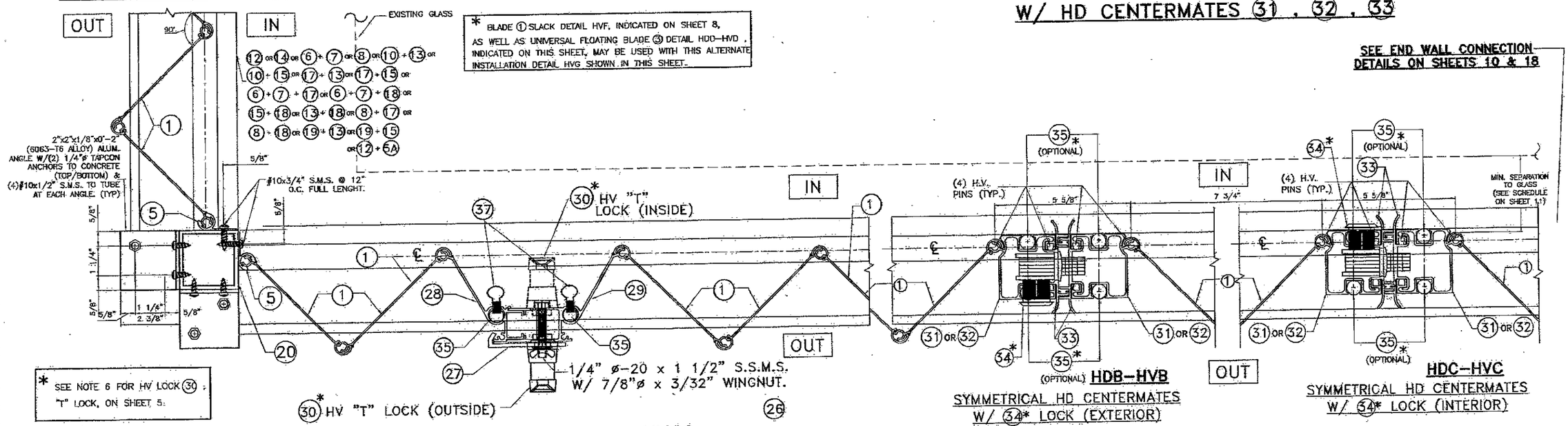

(35)* (OPTIONAL) **HDB-HVB**
SYMMETRICAL HD CENTERMATES W/ (34)* LOCK (EXTERIOR)

HDC-HVC
SYMMETRICAL HD CENTERMATES W/ (34)* LOCK (INTERIOR)

* SEE NOTE 6 FOR HV LOCK (30) "T" LOCK, ON SHEET 5.

† SERIES 9444 ALUMINUM (2024-T3 ALLOY) LARGE FLANGE THIN SHEET NUTSERT, PART # 0820, AS MANUFACTURED BY AVDEL CHERRY TEXTORN, PARSIPPENY, NEW JERSEY 07054 OR EQUAL.

* BLADE (1) SLACK DETAIL HVF, INDICATED ON SHEET 8, AS WELL AS UNIVERSAL FLOATING BLADE (3) DETAIL HDD-HVD, INDICATED ON THIS SHEET, MAY BE USED WITH THIS ALTERNATE INSTALLATION DETAIL HVG SHOWN IN THIS SHEET.

HVG*

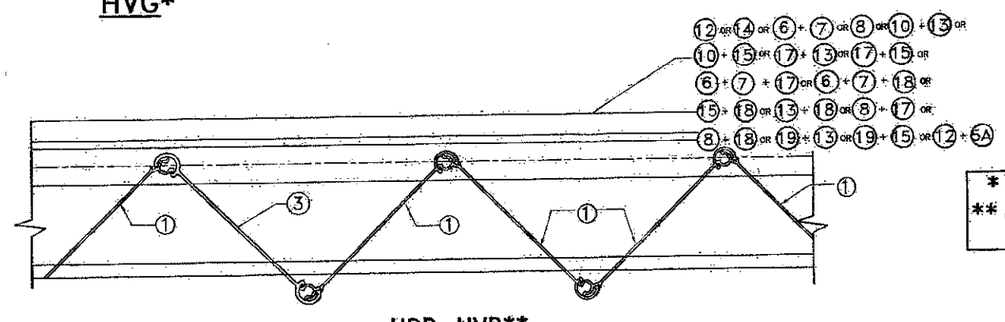

HDD-HVD**
FLOATING STACK

* SEE NOTES ON LOCKING RODS (35) & HD (34) LOCKS ON SHEET 5

** UNIVERSAL FLOATING BLADE (3) DETAIL HDD-HVD IS VALID FOR ALL CENTERMATES APPLICATIONS WITH BLADE (1)

TEXAS DEPARTMENT OF INSURANCE - 2006

© 2012 EASTERN METAL SUPPLY, INC.

STATE OF TEXAS
2/6/14
WALTER A. TILLIT JR.

P.E. SEAL/SIGNATURE/DATE

WALTER A. TILLIT Jr. P.E.
PROFESSIONAL ENGINEER
6355 N.W. 36 STREET, STE. 305
VIRGINIA GARDENS, FL 33166
PHONE (305) 871-1530 FAX (305) 871-1531
TEXAS LIC. # 90691
FIRM REGISTRATION # F-13790

A.S.S.A.
American Shutter Systems Association, Inc.
4268 Westroads Drive
West Palm Beach, FL 33407

BERTHA HV™
Accordion Shutter System
H.V. BLADE #1 W/ OR W/O H.V. WINDOW BLADE

REV. No	DESCRIPTION	DATE
1		
2		
3		
4		
5		
6		

DRAWN BY: A.G.
DATE: 11/03/12
DRAWING No 12-169
SHEET 9 OF 20

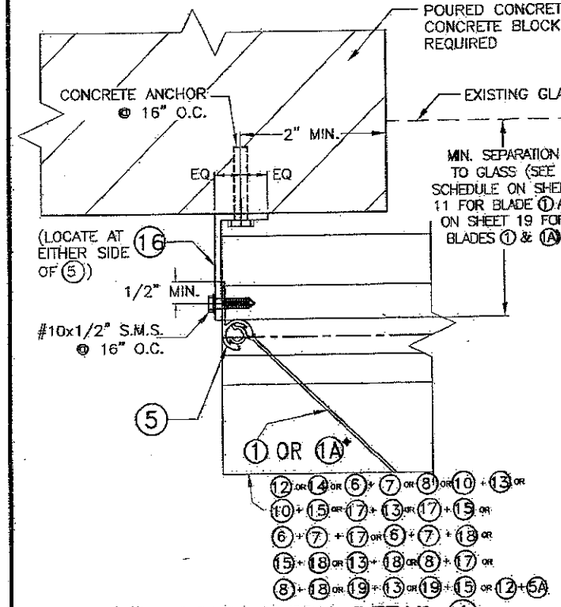

END CONNECTION DETAIL 1

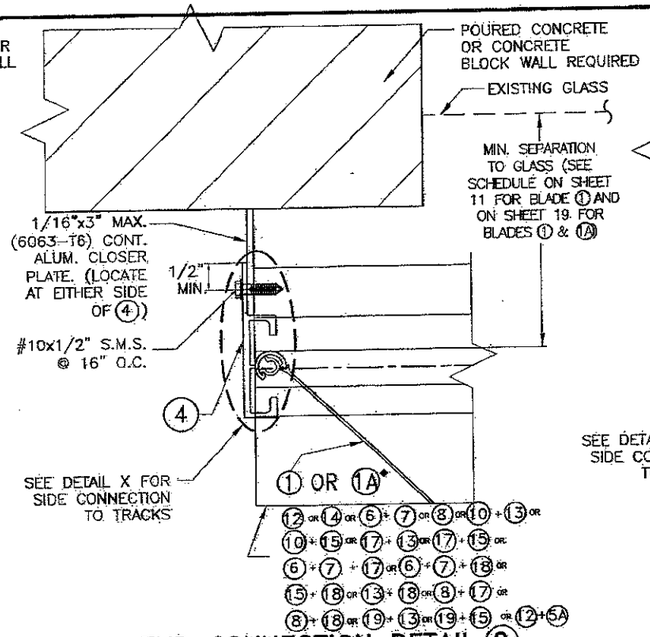

END CONNECTION DETAIL 2

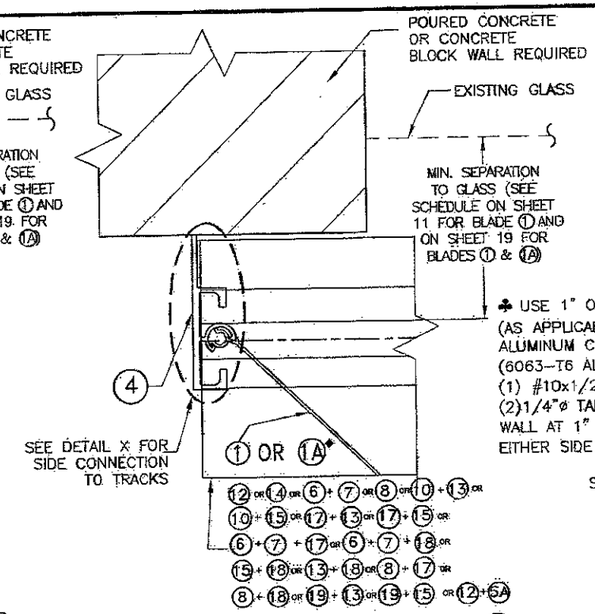

END CONNECTION DETAIL 3

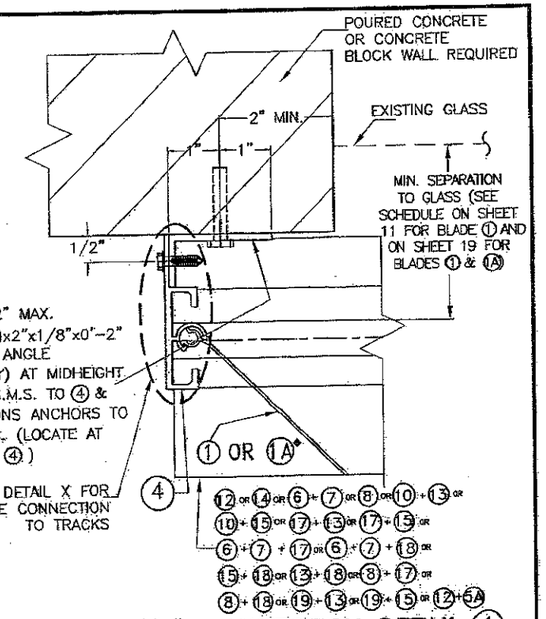

END CONNECTION DETAIL 4

◆ REQUIRED ONLY FOR SPANS GREATER THAN 12'-0"

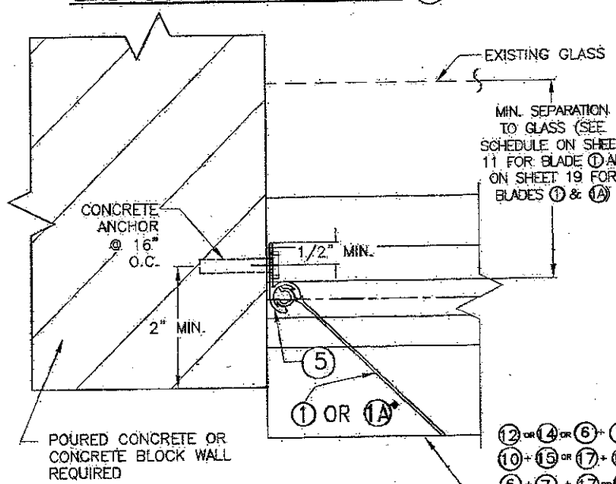

END CONNECTION DETAIL 5

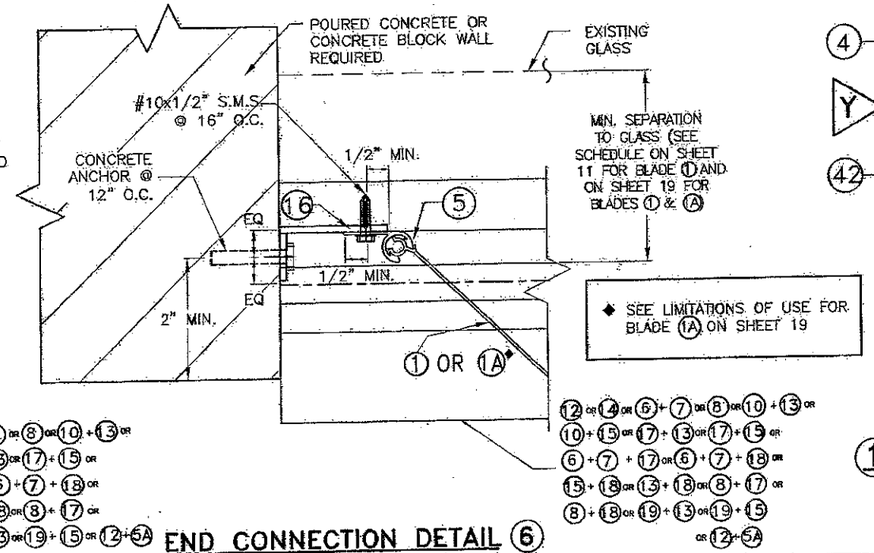

◆ SEE LIMITATIONS OF USE FOR BLADE 1A ON SHEET 19

END CONNECTION DETAIL 6

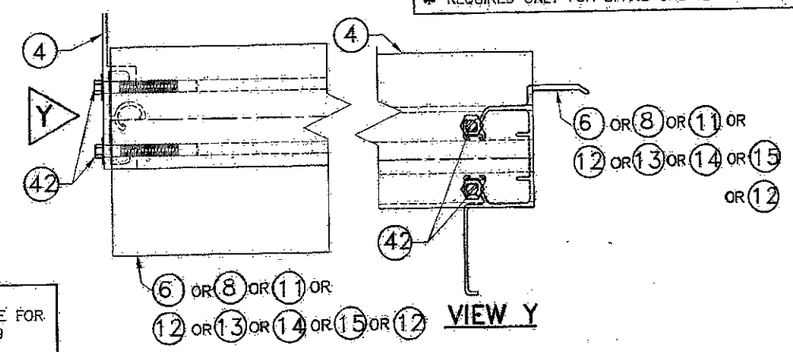

PLAN

DETAIL X

END INSTALLATION

1 HV BLADE OR 1A HV WINDOW BLADE INTO CONCRETE OR CONCRETE BLOCK WALL.

TEXAS DEPARTMENT OF INSURANCE – 2006

© 2012 EASTERN METAL SUPPLY, INC.

BERTHA HV™

Accordion Shutter System

H.V. BLADE #1 W/ OR W/O H.V. WINDOW BLADE

REV. No	DESCRIPTION	DATE
1		
2		
3		
4		
5		
6		

DRAWN BY: A.G.
DATE: 11/03/12
DRAWING No 12-169
SHEET 10 OF 20

STATE OF TEXAS
2/6/12

P.E. SEAL/SIGNATURE/DATE

WALTER A. TILLIT Jr. P.E.
PROFESSIONAL ENGINEER
6355 N.W. 36 STREET, STE. 305
VIRGINIA GARDENS, FL 33166
PHONE (305) 871-1530 FAX (305) 871-1531
TEXAS LIC. # 90691
FIRM REGISTRATION # F-13790

A.S.S.A.
American Shutter Systems Association, Inc.
4268 Westroads Drive
West Palm Beach, FL 33407

SCHEDULE #1

MAXIMUM SHUTTER SPAN* "L+" OR "L−" (ft.). FOR INSTALLATIONS W/ SYMMETRICAL CENTERMATES, (21) & (22) or (31) or (32) W/ ONE H.V. LOCK (24) or (25) or (26) or HD LOCK (34) W/ NO LOCKING RODS (35) or CENTERMATES (28) & (29) W/ ONE HV "T" LOCK (30) W/TWO LOCKING RODS (35) TOP & BOTTOM (SEE NOTES †, ††)

MAXIMUM DESIGN PRESSURE RATING (p.s.f.) (+ OR −)	CONCRETE & WOOD INSTALLATIONS Ö			
	WALL MOUNTING		FLOOR/CEILING MOUNTING	
	L+ (ft)	L− (ft)	L+ (ft)	L− (ft)
30 OR LESS	16'−0"	16'−0"	16'−0"	16'−0"
35	14'−10"	14'−10"	15'−2"	16'−0"
40	13'−10"	13'−10"	14'−2"	15'−2"
45	13'−1"	13'−1"	13'−4"	14'−3"
50	12'−5"	12'−5"	12'−8"	13'−7"
55	11'−10"	11'−10"	12'−1"	12'−11"
60	11'−4"	11'−4"	11'−7"	12'−4"
65	10'−10"	10'−10"	11'−1"	11'−11"
70	10'−6"	10'−6"	10'−9"	11'−5"
75	10'−1"	10'−1"	10'−4"	11'−1"
80	9'−10"	9'−10"	10'−0"	10'−9"
85	9'−6"	9'−6"	9'−9"	10'−5"
90	9'−3"	9'−3"	9'−5"	10'−1"
95	9'−0"	8'−9"	9'−2"	9'−10"
100	8'−9"	8'−4"	9'−0"	9'−7"
105	8'−7"	7'−11"	8'−9"	9'−4"
110	8'−4"	7'−7"	8'−7"	9'−2"
115	8'−2"	7'−3"	8'−4"	8'−11"
120	8'−0"	6'−11"	8'−2"	8'−9"
125	7'−10"	6'−8"	8'−0"	8'−5"
130	7'−8"	6'−5"	7'−10"	8'−1"
135	7'−7"	6'−2"	7'−9"	7'−9"
140	7'−5"	5'−11"	7'−7"	7'−6"
145	7'−3"	5'−9"	7'−5"	7'−3"
150	7'−2"	5'−7"	7'−4"	7'−0"
155	7'−0"	5'−5"	7'−2"	6'−9"
160	6'−11"	5'−2"	7'−1"	6'−7"
165	6'−10"	5'−1"	7'−0"	6'−4"
170	6'−9"	4'−11"	6'−11"	6'−2"
175	6'−7"	4'−9"	6'−9"	6'−0"
180	6'−6"	4'−8"	6'−8"	5'−10"
185	6'−5"	4'−6"	6'−7"	5'−8"
190	6'−4"	4'−5"	6'−6"	5'−6"
195	6'−3"	4'−3"	6'−5"	5'−5"
200	6'−2"	4'−2"	6'−4"	5'−3"
205	6'−1"	4'−1"	6'−3"	5'−1"

SCHEDULE #2

MAXIMUM SHUTTER SPAN* "L+" OR "L−" (ft.) FOR INSTALLATIONS W/ OPPOSING CENTERMATES, (21) & (22) ONE HV LOCK (24) or (25) or (26) W/ NO LOCKING RODS (35) (SEE NOTES †, ††)

MAXIMUM DESIGN PRESSURE RATING (p.s.f.) (+ OR −)	CONCRETE & WOOD INSTALLATIONS Ö	
	WALL MOUNTING & FLOOR/CEILING MOUNTING	
	L+ (ft)	L− (ft)
30	16'−0"	16'−0"
35	14'−10"	14'−10"
40	13'−10"	13'−10"
45	13'−1"	13'−1"
50	12'−5"	12'−5"
55	11'−10"	11'−10"
60	11'−4"	11'−4"
65	10'−10"	10'−10"
70	10'−6"	10'−6"
75	10'−1"	10'−1"
80	9'−10"	9'−10"
85	9'−6"	9'−6"
90	9'−3"	9'−3"
95	9'−0"	8'−9"
100	8'−9"	8'−4"
105	8'−7"	7'−11"
110	8'−4"	7'−7"
115	8'−2"	7'−3"
120	8'−0"	6'−11"
125	7'−10"	6'−8"
130	7'−8"	6'−5"
135	7'−7"	6'−2"
140	7'−5"	5'−11"
145	7'−3"	5'−9"
150	7'−2"	5'−7"
155	7'−0"	5'−5"
160	6'−11"	5'−2"
165	6'−10"	5'−1"
170	6'−9"	4'−11"
175	6'−7"	4'−9"
180	6'−6"	4'−8"
185	6'−5"	4'−6"
190	6'−4"	4'−5"
195	6'−3"	4'−3"
200	6'−2"	4'−2"
205	6'−1"	4'−1"

SCHEDULE #3

MAXIMUM SHUTTER SPAN* "L+" OR "L−" (ft.) INSTALLATIONS W/ SYMMETRICAL CENTERMATES (21) & (22) W/ ONE HV LOCKS (24) OR (25) W/ NO LOCKING RODS (35)

(VALID FOR MOUNTING (11), SHEET 7)

MAXIMUM DESIGN PRESSURE RATING (p.s.f.) (+ OR −)	CONCRETE INSTALLATIONS	
	FLOOR/CEILING MOUNTING OR FLOOR/WALL MOUNTING	
	L+ (ft)	L− (ft)
30	16'−0"	16'−0"
35	15'−2"	16'−10"
40	14'−2"	15'−2"
45	13'−4"	14'−3"
50	12'−3"	13'−1"
55	11'−1"	11'−11"
60	10'−2"	10'−11"
65	9'−5"	10'−1"
70	8'−9"	9−4"
75	−	8'−9"

INSTALLATION LEGEND		
	CONCRETE & MANSORY	WOOD
WALL MOUNTING	A, B, C, D, E, F, K & L	M, N, O, P, Q, R, S, & V.
FLOOR/CEILING MOUNTING	G, H, I, I1, J & M	T, U, W & X

Ö MAXIMUM SHUTTER SPAN "L+" OR "L−" FOR INSTALLATIONS INTO WOOD SHALL BE LIMITED TO 105 psf. DESIGN PRESSURE RATING.

† HV CORNER CENTERMATE #3 MAY BE USED AT ALL MOUNTING INSTALLATIONS. LOCKING SPECIFICATIONS SHALL BE AS INDICATED ON MANDATORY CONDITION #2 NOTE #5, SHEET 5.

†† EXCEPT THAT MAXIMUM SHUTTER SPAN "L+", OR "L−" AND MAXIMUM DESING PRESSURE RATING FOR INSTALLATIONS INTO CONCRETE OR CONCRETE BLOCK SHALL BE LIMITED AS FOLLOWS:
1.− CONNECTIONS TO KEYSTONE MOUNTING LIMITED TO +64,−72 p.s.f. AND 8'−0" SPAN, SEE MOUNTING (M) ON SHEET 7.

SEPARATION TO GLASS SCHEDULE

WIND ZONE ASTM E−1996	MINIMUM SEPARATION TO GLASS
1 THRU 3	1"

* NOTES:

(1) L+: MAXIMUM ALLOWABLE SPAN FOR A GIVEN POSITIVE DESIGN PRESSURE RATING.
L−: MAX. ALLOWABLE SPAN FOR A GIVEN NEGATIVE DESIGN PRESSURE RATING.

(2) PROCEDURE TO DETERMINE MAXIMUM SPAN FOR WALL MOUNTINGS (TOP/BOTTOM) OR FLOOR/CEILING:

GIVEN A POSITIVE DESIGN PRESSURE RATING, DETERMINE MAXIMUM SPAN "L+" FROM SCHEDULE.
GIVEN A NEGATIVE DESIGN PRESSURE RATING, DETERMINE MAXIMUM SPAN "L−" FROM SCHEDULE.

FINAL MAXIMUM ALLOWABLE SPAN IS EQUAL TO THE MINIMUM DETERMINED SPAN BETWEEN "L+" AND "L−".

(3) PROCEDURE TO DETERMINE MAXIMUM SPAN FOR COMBINATIONS IN BETWEEN WALL MOUNTINGS W/ FLOOR/CEILING MOUNTINGS:

FOR A GIVEN POSITIVE DESIGN PRESSURE RATING: DETERMINE:
L_{1+}= MAX. SPAN FOR WALL MOUNTING INSTALLATIONS.
L_{2+}= MAX. SPAN FOR FLOOR/CEILING MOUNTING INSTALLATIONS.

FOR A GIVEN NEGATIVE DESIGN PRESSURE RATING: DETERMINE:
L_{1-}= MAX. SPAN FOR WALL MOUNTING INSTALLATIONS.
L_{2-}= MAX. SPAN FOR FLOOR/CEILING MOUNTING INSTALLATIONS.

FINAL MAXIMUM ALLOWABLE SPAN IS EQUAL TO THE MINIMUM BETWEEN "L_{1+}", "L_{2+}", "L_{1-}" AND "L_{2-}"

(4) GO TO ANCHOR SCHEDULE WITH FINAL MAXIMUM ALLOWABLE SPAN AND NEGATIVE DESIGN PRESSURE RATING TO DETERMINE MAXIMUM ANCHOR SPACING.

(1) HV BLADE

TEXAS DEPARTMENT OF INSURANCE − 2006

© 2012 EASTERN METAL SUPPLY, INC.

STATE OF TEXAS
2/6/14
P.E. SEAL/SIGNATURE/DATE

WALTER A. TILLIT Jr. P.E.
PROFESSIONAL ENGINEER
6355 N.W. 36 STREET, STE. 305
VIRGINIA GARDENS, FL 33166
PHONE (305) 871−1530 FAX (305) 871−1531
TEXAS LIC. # 90691
FIRM REGISTRATION # F−13790

A.S.S.A.
American Shutter Systems Association, Inc.
4268 Westroads Drive
West Palm Beach, FL 33407

BERTHA HV™
Accordion Shutter System
H.V. BLADE #1 W/ OR W/O H.V. WINDOW BLADE

REV. No	DESCRIPTION	DATE
1		
2		
3		
4		
5		
6		

DRAWN BY: MACOY./L.G.
DATE: 11/03/12
DRAWING No 12−169
SHEET 11 OF 20

MAXIMUM ANCHOR* SPACING (in.) SCHEDULE FOR A GIVEN MAX. SHUTTER SPAN, DESIGN NEGATIVE PRESSURE RATING AND A CORRESPONDING MOUNTING TYPE FOR CONCRETE OR CONCRETE BLOCK INSTALLATIONS

(SEE MOUNTINGS A, B, C, D AND F ON SHEET 6)

MAXIMUM SPAN (ft)	POURED CONCRETE																															
	(A) WALL HEADER MOUNTING W/ (12)								(A) WALL HEADER MOUNTING W/ (14)								(B) WALL HEADER MOUNTING								(D) WALL SILL MOUNTING W/ (12)								(D) WALL SILL MOUNTING W/ (14)								(C) & (F) WALL HEADER/SILL MOUNTING							
	DESIGN NEGATIVE PRESSURE RATING (psf)								DESIGN NEGATIVE PRESSURE RATING (psf)								DESIGN NEGATIVE PRESSURE RATING (psf)								DESIGN NEGATIVE PRESSURE RATING (psf)								DESIGN NEGATIVE PRESSURE RATING (psf)								DESIGN NEGATIVE PRESSURE RATING (psf)							
	30	40	60	75	90	120	160	205	30	40	60	75	90	120	160	205	30	40	60	75	90	120	160	205	30	40	60	75	90	120	160	205	30	40	60	75	90	120	160	205	30	40	60	75	90	120	160	205
3'-0" OR LESS	14	12	10	9	8	8	6	6	14	12	10	9	8	8	6	6	14	12	10	9	8	8	6	6	14	12	10	9	8	8	6	–	14	12	10	9	8	8	6	5.5	8	8	8	8	8	8	7	5.5
	14	12	10	9	8	8	6	6	14	12	10	9	8	8	6	6	14	12	10	9	8	8	6	6	14	12	10	9	8	8	6	6	14	12	10	9	8	8	6	6	8	8	8	8	8	8	8	8
	14	12	10	9	8	8	6	5	14	12	10	9	8	8	6	6	14	12	10	9	8	8	6	6	14	12	10	9	8	8	6	3	14	12	10	9	8	8	6	6	8	8	8	8	8	8	8	6.5
	14	12	10	9	8	8	6	6	14	12	10	9	8	8	6	6	14	12	10	9	8	8	6	6	14	12	10	9	8	8	6	–	14	12	10	9	8	8	6	6	8	8	8	8	8	8	8	7
4'-0"	14	12	10	9	8	8	6	4	14	12	10	9	8	8	6	6	14	12	10	9	8	8	6	6	14	12	10	9	8	7	–	–	14	12	10	9	8	8	6	6	8	8	8	8	8	7	5.5	4
	14	12	10	9	8	8	6	4	14	12	10	9	8	8	6	6	14	12	10	9	8	8	6	6	14	12	10	9	8	8	5.5	–	14	12	10	9	8	8	6	6	8	8	8	8	8	8	8	8
	14	12	10	9	8	8	4.5	–	14	12	10	9	8	8	6	4	14	12	10	9	8	8	6	6	14	12	10	9	8	8	–	–	14	12	10	9	8	8	6	–	8	8	8	8	8	8	6.5	5
	14	12	10	9	8	8	6	4	14	12	10	9	8	8	6	6	14	12	10	9	8	8	6	6	14	12	10	9	8	8	–	–	14	12	10	9	8	8	6	–	8	8	8	8	8	8	7	5.5
	14	12	10	9	8	8	4.5	–	14	12	10	9	8	8	6	3.5	14	12	10	9	8	8	6	5	14	12	10	9	7.5	–	–	–	14	12	10	9	7.5	5.5	–	–	8	8	8	8	7.5	5.5	4	3
	14	12	10	9	8	8	6	3.5	14	12	10	9	8	8	6	3.5	14	12	10	9	8	8	6	6	14	12	10	9	8	7	–	–	14	12	10	9	8	8	6	–	8	8	8	8	8	8	8	8
5'-0"	14	12	10	9	8	8	4.5	–	14	12	10	9	8	8	6	3.5	14	12	10	9	8	8	6	6	14	12	10	9	8	3	–	–	14	12	10	9	8	7	–	–	8	8	8	8	8	7	5	4
	14	12	10	9	8	5.5	–	–	14	12	10	9	8	8	4.5	–	14	12	10	9	8	8	6	5	14	12	10	9	8	–	–	–	14	12	10	9	8	7.5	–	–	8	8	8	8	8	7.5	5.5	4
	14	12	10	9	8	8	4	–	14	12	10	9	8	8	6	3.5	14	12	10	9	8	8	6	6	14	12	10	9	8	–	–	–	14	12	9.5	7.5	6.5	3.5	–	–	8	8	8	7.5	6.5	4.5	3.5	–
	14	12	10	9	8	5.5	3	–	14	12	10	9	8	8	4.5	–	14	12	10	9	8	8	6	6	14	12	10	9	8	4	–	–	14	12	10	9	8	8	4	–	8	8	8	8	8	8	8	7.5
6'-0"	14	12	10	9	8	5.5	–	–	14	12	10	9	8	8	4.5	–	14	12	10	9	8	8	6	6	14	12	10	9	4.5	–	–	–	14	12	10	9	7.5	4	–	–	8	8	8	8	7.5	5.5	4	3
	14	12	10	9	8	3	–	–	14	12	10	9	8	8	–	–	14	12	10	9	8	8	5.5	3.5	14	12	10	9	5	–	–	–	14	12	10	9	8	4.5	–	–	8	8	8	8	8	6	4.5	–
	14	12	10	9	8	5	–	–	14	12	10	9	8	8	4	–	14	12	10	9	8	8	6	5.5	14	12	8	4.5	–	–	–	–	14	12	8	6.5	5.5	–	–	–	8	8	8	6.5	5.5	4	3	–
	14	12	10	9	8	4	–	–	14	12	10	9	8	6.5	3	–	14	12	10	9	8	8	6	–	14	12	10	9	6	–	–	–	14	12	10	9	8	7	–	–	8	8	8	8	8	8	7.5	6
7'-0"	14	12	10	9	8	4	–	–	14	12	10	9	8	6.5	3	–	14	12	10	9	8	7	4	–	14	12	10	5.5	–	–	–	–	14	12	10	8	6.5	–	–	–	8	8	8	8	6.5	5	3.5	–
	14	12	10	9	4.5	–	–	–	14	12	10	9	8	4	–	–	14	12	10	9	8	8	6	–	14	12	10	6	–	–	–	–	14	12	10	8.5	7	–	–	–	8	8	8	8	7	5	4	–
	14	12	10	9	7.5	3.75	–	–	14	12	10	9	8	6	–	–	14	12	10	9	8	8	6	–	14	11	7	–	–	–	–	–	14	11	7	5.5	3.5	–	–	–	8	8	7	5.5	4.5	3.5	–	–
	14	12	10	9	5.5	3	–	–	14	12	10	9	8	4.5	–	–	14	12	10	9	8	8	–	–	14	12	10	7	4	–	–	–	14	12	10	9	8	3	–	–	8	8	8	8	8	7.5	7	4
	14	12	10	9	5.5	–	–	–	14	12	10	9	8	4.5	–	–	14	12	10	9	8	8	–	–	14	12	8.5	3	–	–	–	–	14	12	8.5	7	4	–	–	–	8	8	8	7	5.5	4	3	–
8'-0"	14	12	10	5.5	3	–	–	–	14	12	10	9	8	–	–	–	14	12	10	9	8	5.5	–	–	14	12	9.5	–	–	–	–	–	14	12	9.5	7.5	4.5	–	–	–	8	8	8	7.5	6	4.5	–	–
	14	12	10	9	5	–	–	–	14	12	10	9	8	4	–	–	14	12	10	9	8	8	–	–	14	12	10	5	–	–	–	–	13	9.5	6.5	5	–	–	–	–	8	8	6.5	5	4	3	–	–
	14	12	10	6.5	4.5	–	–	–	14	12	10	9	7.5	–	–	–	14	12	10	9	8	–	–	–	14	12	10	9	8	–	–	–	14	12	10	9	5.5	–	–	–	8	8	8	8	8	6.5	6	3
	14	12	10	6.5	4	–	–	–	14	12	10	9	7.5	–	–	–	14	12	10	9	8	–	–	–	14	12	10	5	–	–	–	–	14	11.5	7.5	6	–	–	–	–	8	8	7.5	6	5	4	–	–
9'-0"	14	12	8.5	4	–	–	–	–	14	12	10	9	4.5	–	–	–	14	12	10	9	7.5	–	–	–	14	11.5	4.5	–	–	–	–	–	14	12	8	6.5	–	–	–	–	8	8	8	6.5	5.5	4	–	–
	14	12	10	6	4	–	–	–	14	12	10	9	7	–	–	–	14	12	10	9	8	–	–	–	14	12	5	–	–	–	–	–	11.5	8.5	5.5	–	–	–	–	–	8	8	5.5	4.5	3.5	–	–	–
	14	12	9.5	5	3.5	–	–	–	14	12	10	9	5.5	–	–	–	14	12	10	9	8	–	–	–	14	12	7	–	–	–	–	–	14	12	10	7.5	5	–	–	–	8	8	8	8	8	7.5	4.5	–
	14	12	9.5	5	3.5	–	–	–	14	12	10	9	5.5	–	–	–	14	12	10	9	8	–	–	–	14	12	10.5	3	–	–	–	–	14	10.5	7	3.5	–	–	–	–	8	8	7	5.5	4.5	3.5	–	–
10'-0"	14	12	5.5	3	–	–	–	–	14	12	10	6	3	–	–	–	14	12	10	9	6	–	–	–	14	12	10	9	8	–	–	–	14	11	7.5	–	–	–	–	–	8	8	7.5	6	5	–	–	–
	14	12	9	4.5	3	–	–	–	14	12	10	9	5	–	–	–	14	12	10	9	8	–	–	–	14	12	10	9	8	–	–	–	14	11	–	–	–	–	–	–	8	8	5	4	3.5	–	–	–
	14	12	7	–	–	–	–	–	14	12	10	–	–	–	–	–	14	12	10	–	–	–	–	–	14	12	10	–	–	–	–	–	10.5	8	–	–	–	–	–	–	8	8	5	4	3.5	–	–	–
	14	12	7	–	–	–	–	–	14	12	10	–	–	–	–	–	14	12	10	–	–	–	–	–	14	12	5	–	–	–	–	–	14	12	10	–	–	–	–	–	8	8	8	8	8	7	3.5	–
11'-0"	14	12	4	–	–	–	–	–	14	12	10	–	–	–	–	–	14	12	10	–	–	–	–	–	14	12	10	–	–	–	–	–	12.5	9.5	6	–	–	–	–	–	8	8	6	5	4	3	–	–
	14	12	6.5	–	–	–	–	–	14	12	10	–	–	–	–	–	14	12	10	–	–	–	–	–	14	12	10	–	–	–	–	–	13.5	10	–	–	–	–	–	–	14	10	7	–	–	–	–	–	8	8	7	5.5	4.5	–	–	–
	14	12	5.5	–	–	–	–	–	14	12	10	–	–	–	–	–	14	12	10	–	–	–	–	–	14	12	10	–	–	–	–	–	9.5	7	–	–	–	–	–	–	9.5	7	3.5	–	–	–	–	–	8	7	4.5	3.5	3	–	–	–
	14	12	5.5	–	–	–	–	–	14	12	10	–	–	–	–	–	14	12	10	–	–	–	–	–	14	12	4	–	–	–	–	–	14	12	10	–	–	–	–	–	8	8	8	8	8	6	3	–
12'-0"	14	12	5.5	–	–	–	–	–	14	12	10	–	–	–	–	–	14	12	10	–	–	–	–	–	14	12	10	–	–	–	–	–	11.5	8.5	4	–	–	–	–	–	8	8	5.5	4.5	4	–	–	–
	14	12	3	–	–	–	–	–	14	12	8	–	–	–	–	–	14	12	10	–	–	–	–	–	14	12	10	–	–	–	–	–	12.5	9.5	4.5	–	–	–	–	–	8	8	6	5	4	3	–	–
	14	12	5	–	–	–	–	–	14	12	10	–	–	–	–	–	14	12	10	–	–	–	–	–	14	12	10	–	–	–	–	–	9	6.5	–	–	–	–	–	–	8	6.5	4.5	3.5	3	–	–	–
	14	12	–	–	–	–	–	–	14	12	–	–	–	–	–	–	14	12	–	–	–	–	–	–	14	12	–	–	–	–	–	–	14	12	–	–	–	–	–	–	8	8	8	8	8	4.5	–	–
	14	12	–	–	–	–	–	–	14	12	–	–	–	–	–	–	14	12	–	–	–	–	–	–	14	12	–	–	–	–	–	–	10.5	8	–	–	–	–	–	–	8	8	5	4	3.5	–	–	–
13'-0"	14	10	–	–	–	–	–	–	14	12	–	–	–	–	–	–	14	12	–	–	–	–	–	–	14	12	–	–	–	–	–	–	11.5	8.5	–	–	–	–	–	–	8	8	5.5	4.5	–	–	–	–
	14	12	–	–	–	–	–	–	14	12	–	–	–	–	–	–	14	12	–	–	–	–	–	–	14	12	–	–	–	–	–	–	11.5	6	–	–	–	–	–	–	8	6	4	3	–	–	–	–
	14	12	–	–	–	–	–	–	14	12	–	–	–	–	–	–	14	12	–	–	–	–	–	–	14	12	–	–	–	–	–	–	8	3	–	–	–	–	–	–	8	6	–	–	–	–	–	–	8	8	8	8	7.5	4	–	–
	14	12	–	–	–	–	–	–	14	12	–	–	–	–	–	–	14	12	–	–	–	–	–	–	14	12	–	–	–	–	–	–	14	9	–	–	–	–	–	–	14	12	–	–	–	–	–	–	8	7.5	5	4	3	–	–	–
14'-0"	14	12	–	–	–	–	–	–	14	12	–	–	–	–	–	–	14	12	–	–	–	–	–	–	14	12	–	–	–	–	–	–	10	4	–	–	–	–	–	–	10	7.5	–	–	–	–	–	–	8	8	5	4	–	–	–	–
	14	7	–	–	–	–	–	–	14	12	–	–	–	–	–	–	14	12	–	–	–	–	–	–	14	12	–	–	–	–	–	–	10.5	4	–	–	–	–	–	–	10.5	8	–	–	–	–	–	–	7.5	5.5	3.5	3	–	–	–	–
	14	11.5	–	–	–	–	–	–	14	12	–	–	–	–	–	–	14	12	–	–	–	–	–	–	14	12	–	–	–	–	–	–	10.5	4	–	–	–	–	–	–	7.5	–	–	–	–	–	–	–	8	8	8	7	7	3.5	–	–
	14	–	–	–	–	–	–	–	14	–	–	–	–	–	–	–	14	–	–	–	–	–	–	–	14	–	–	–	–	–	–	–	7.5	–	–	–	–	–	–	–	14	–	–	–	–	–	–	–	8	7	4.5	3.5	3	–	–	–
	14	–	–	–	–	–	–	–	14	–	–	–	–	–	–	–	14	–	–	–	–	–	–	–	14	–	–	–	–	–	–	–	9	–	–	–	–	–	–	–	9	–	–	–	–	–	–	–	8	7.5	5	4	–	–	–	–
15'-0"	14	–	–	–	–	–	–	–	14	–	–	–	–	–	–	–	14	–	–	–	–	–	–	–	14	–	–	–	–	–	–	–	10	–	–	–	–	–	–	–	10	–	–	–	–	–	–	–	7	5.5	3.5	–	–	–	–	–
	14	–	–	–	–	–	–	–	14	–	–	–	–	–	–	–	14	–	–	–	–	–	–	–	14	–	–	–	–	–	–	–	7	–	–	–	–	–	–	–	7	–	–	–	–	–	–	–	8	8	8	7.5	6	3	–	–
	14	–	–	–	–	–	–	–	14	–	–	–	–	–	–	–	14	–	–	–	–	–	–	–	14	–	–	–	–	–	–	–	14	–	–	–	–	–	–	–	14	–	–	–	–	–	–	–	8	6.5	4	3.5	–	–	–	–
	14	–	–	–	–	–	–	–	14	–	–	–	–	–	–	–	14	–	–	–	–	–	–	–	14	–	–	–	–	–	–	–	8	–	–	–	–	–	–	–	8	–	–	–	–	–	–	–	8	6	4	3	–	–	–	–
16'-0"	14	–	–	–	–	–	–	–	14	–	–	–	–	–	–	–	14	–	–	–	–	–	–	–	14	–	–	–	–	–	–	–	9.5	–	–	–	–	–	–	–	9.5	–	–	–	–	–	–	–	8	7	4.5	–	–	–	–	–

ANCHORS SPACING LEGEND

TAPCON OR TAPCON WITH ADVANCED THREADFORM TECHNOLOGY
ALL POINTS SOLID-SET
BLUE TAP
TAPPER+

* SEE ANCHOR SPECIFICATIONS ON SHEET 13

◆ SEE LIMITATIONS OF USE FOR BLADE (1A) ON SHEET 19

(1) HV BLADE OR (1) HV BLADE W/ (1A) HV WINDOW BLADE WORKING IN UNISON ◆

TEXAS DEPARTMENT OF INSURANCE – 2006

P.E. SEAL/SIGNATURE/DATE

WALTER A. TILLIT Jr. P.E.
PROFESSIONAL ENGINEER

6355 N.W. 36 STREET, STE. 305
VIRGINIA GARDENS, FL 33166
PHONE (305) 871-1530 FAX (305) 871-1531

TEXAS LIC. # 90691

FIRM REGISTRATION # F-13790

A.S.S.A.
American Shutter Systems Association, Inc.
4268 Westroads Drive
West Palm Beach, FL 33407

© 2012 EASTERN METAL SUPPLY, INC.

BERTHA HV™
Accordion Shutter System
H.V. BLADE #1 W/ OR W/O H.V. WINDOW BLADE

REV. No	DESCRIPTION	DATE
1		
2		
3		
4		
5		
6		

DRAWN BY: A.G.
DATE: 11/03/12
DRAWING No 12-169
SHEET 12 OF 20

MAXIMUM ANCHOR* SPACING (in.) SCHEDULE FOR A GIVEN MAX. SHUTTER SPAN, DESIGN NEGATIVE PRESSURE RATING AND A CORRESPONDING MOUNTING TYPE FOR CONCRETE OR CONCRETE BLOCK INSTALLATIONS

(SEE MOUNTINGS E, G, & H ON SHEETS 6 & 7)

MAXIMUM SPAN (ft)	POURED CONCRETE/CONCRETE BLOCK								POURED CONCRETE															
	(E) WALL SILL MOUNTING								(G) CEILING MOUNTING								(H) FLOOR MOUNTING							
	DESIGN NEGATIVE PRESSURE RATING (psf)								DESIGN NEGATIVE PRESSURE RATING (psf)								DESIGN NEGATIVE PRESSURE RATING (psf)							
	30	40	60	75	90	120	160	205	30	40	60	75	90	120	160	205	30	40	60	75	90	120	160	205
3'-0" OR LESS	14	12	10	9	8	8	6	5.5	14	12	10	9	8	8	6	6	14	12	10	9	8	8	8	6
	14	12	10	9	8	8	6	6	14	12	10	9	8	8	6	6	14	12	10	9	8	8	6	6
	14	12	10	9	8	8	6	6	14	12	10	9	8	8	6	6	14	12	10	9	8	8	6	5
	14	12	10	9	8	8	6	7	14	12	10	9	8	8	6	6	14	12	10	9	8	8	6	6
4'-0"	14	12	10	9	8	7	5.5	3.5	14	12	10	9	8	8	6	6	14	12	10	9	8	8	6	5
	14	12	10	9	8	8	6	6	14	12	10	9	8	8	6	6	14	12	10	9	8	8	6	5.5
	14	12	10	9	8	8	6	4	14	12	10	9	8	8	6	4.5	14	12	10	9	8	6	4	3.5
	14	12	10	9	8	8	6	4.5	14	12	10	9	8	8	6	5.5	14	12	10	9	8	8	6	4.5
5'-0"	14	12	10	9	7.5	5.5	3.5	—	14	12	10	9	8	8	6	5	14	12	10	9	8	7	5.5	4
	14	12	10	9	8	8	6	6	14	12	10	9	8	8	6	5.5	14	12	10	9	8	8	6	4.5
	14	12	10	9	8	7	4	—	14	12	10	9	8	6.5	5	3.5	14	12	10	8	6.5	5	3.5	3
	14	12	10	9	8	7.5	4.5	—	14	12	10	9	8	8	6	4.5	14	12	10	9	8	6	4.5	3.75
6'-0"	14	12	9.5	7.5	6.5	4.5	—	—	14	12	10	9	8	7.5	5.5	4	14	12	10	9	8	6	4.5	3.5
	14	12	10	9	8	8	6	—	14	12	10	9	8	8	6	5	14	12	10	9	8	6.5	5	3.5
	14	12	10	9	7.5	5.5	3	—	14	12	10	8.5	7	5.5	4	3	14	12	8	6.5	5.5	4	3	—
	14	12	10	9	8	6	—	—	14	12	10	9	8	8.5	5	3.75	14	12	10	8.5	8	5	4	—
7'-0"	14	12	8	6.5	5.5	3	—	—	14	12	10	9	8	6.5	4.5	3.5	14	12	10	8	7	5	3.5	3
	14	12	10	9	8	8	—	—	14	12	10	9	8	7	5	4	14	12	10	9	7.5	5.5	4	3
	14	12	10	8	6.5	4	—	—	14	12	9	7.5	6	4.5	3.5	—	14	10.5	7	5.5	4.5	3.5	—	—
	14	12	10	8.5	7	4	—	—	14	12	10	9	7.5	5.5	4	—	14	12	9	7	7.5	4.5	—	—
8'-0"	14	11	7	5.5	4.5	—	—	—	14	12	10	9	7.5	5.5	4	—	14	12	9	7	6	4.5	3	—
	14	12	10	9	8	6.5	—	—	14	12	10	9	8	6	4	—	14	12	10	8	6.5	5	3.5	—
	14	12	8.5	7	5.5	3	—	—	14	12	8	6.5	5.5	4	3	—	12.5	9.5	6	5	4	3	—	—
	14	12	9.5	7.5	6	—	—	—	14	12	9.5	8	6.5	5	—	—	14	12	8	6	6.5	4	—	—
9'-0"	13	9.5	6.5	5	3.5	—	—	—	14	12	10	8	6.5	5	—	—	14	12	8	6.5	5	4	—	—
	14	12	10	9	8	—	—	—	14	12	10	9	7.5	4.5	—	—	14	12	8.5	7	5.5	4	—	—
	14	11.5	7.5	6	4	—	—	—	14	11	7	5.5	5	3.5	—	—	11	8	5.5	4.5	3.5	—	—	—
	14	12	8	6.5	4.5	—	—	—	14	12	8.5	7	5.5	4	—	—	14	10.5	7	5.5	6	4.5	—	—
10'-0"	11.5	8.5	5.5	4	—	—	—	—	14	12	9	7	6	4.5	—	—	14	11	7	5.5	4.5	3.5	—	—
	14	12	10	9	7.5	—	—	—	14	12	10	8	6.5	5	—	—	14	12	8	6	5	4	—	—
	14	10.5	7	5	3.5	—	—	—	13	9.5	6.5	5	4	3	—	—	10	7.5	5	4	3	—	—	—
	14	11	7.5	5.5	—	—	—	—	14	11.5	9	6	5	4	—	—	12.5	9.5	6	5	4	4	—	—
11'-0"	10.5	8	5	—	—	—	—	—	14	12	8	6.5	5.5	4	—	—	13	10	6.5	5	4	3	—	—
	14	12	10	—	—	—	—	—	14	12	9	7	6	4.5	—	—	14	10.5	7	5.5	4.5	3.5	—	—
	12.5	9.5	5	—	—	—	—	—	12	9	6	4.5	4	3	—	—	9	7	4.5	3.5	3	—	—	—
	14	10	7	—	—	—	—	—	14	10.5	7	5.5	4.5	—	—	—	11.5	8.5	5.5	4.5	3.75	—	—	—
12'-0"	9.5	7	4.5	—	—	—	—	—	14	11.5	7.5	6	5	—	—	—	12	9	6	4.5	4	—	—	—
	14	12	10	—	—	—	—	—	14	12	8	6.5	5.5	—	—	—	13	10	6.5	5	4	—	—	—
	11.5	8.5	4.5	—	—	—	—	—	11	8	5.5	4	3.5	—	—	—	8	6	4	3	—	—	—	—
	13.5	9.5	6	—	—	—	—	—	13	9.5	6.5	5	4	—	—	—	10.5	8	5	4	—	—	—	—
13'-0"	9	6.5	—	—	—	—	—	—	14	10.5	7	5.5	4.5	—	—	—	11	8.5	5.5	4.5	3.5	—	—	—
	14	12	—	—	—	—	—	—	14	11.5	7.5	6	5	—	—	—	12	9	6	4.5	4	—	—	—
	10.5	8	—	—	—	—	—	—	10	7.5	5	4	3	—	—	—	7.5	5.5	4	3	—	—	—	—
	12.5	8.5	—	—	—	—	—	—	12	9	6	4.5	4	—	—	—	9.5	7	5	4	—	—	—	—
14'-0"	8	6	—	—	—	—	—	—	13	9.5	6.5	5	—	—	—	—	10.5	7.5	5	4	—	—	—	—
	14	12	—	—	—	—	—	—	14	10.5	7	5.5	—	—	—	—	11	8.5	5.5	4.5	—	—	—	—
	10	7.5	—	—	—	—	—	—	9	7	4.5	3.5	—	—	—	—	7	5	3.5	3	—	—	—	—
	11.5	8	—	—	—	—	—	—	11	8	5.5	4.5	—	—	—	—	9	6.5	4.5	—	—	—	—	—
15'-0"	7.5	—	—	—	—	—	—	—	12	9	6	—	—	—	—	—	9.5	7	4.5	—	—	—	—	—
	14	—	—	—	—	—	—	—	13.5	10	6.5	—	—	—	—	—	10.5	8	5	—	—	—	—	—
	9	—	—	—	—	—	—	—	8.5	6.5	4	—	—	—	—	—	6.5	5	3	—	—	—	—	—
	10	—	—	—	—	—	—	—	10.5	8	5	—	—	—	—	—	8.5	6	4	—	—	—	—	—
16'-0"	7	—	—	—	—	—	—	—	11.5	8.5	5.5	—	—	—	—	—	9	6.5	4.5	—	—	—	—	—
	14	—	—	—	—	—	—	—	12.5	9.5	6	—	—	—	—	—	10	7.5	5	—	—	—	—	—
	8	—	—	—	—	—	—	—	8	6	4	—	—	—	—	—	5	4.5	3	—	—	—	—	—
	9.5	—	—	—	—	—	—	—	9.5	7	5	—	—	—	—	—	8	6	4	—	—	—	—	—

ANCHORS SPACING LEGEND

TAPCON OR TAPCON WITH ADVANCED THREADFORM TECHNOLOGY
ALL POINTS SOLID-SET
BLUE TAP W/ CAP
TAPPER+

◆ SEE LIMITATIONS OF USE FOR BLADE (1A) ON SHEET 19

(1) HV BLADE OR (1) HV BLADE W/ (1A) HV WINDOW BLADE WORKING IN UNISON ◆

* SPECIFICATIONS ON ANCHOR REQUIREMENTS: POURED CONCRETE OR CONCRETE BLOCK SUBSTRATES

1. ANCHORS TO SUBSTRATE SHALL BE AS FOLLOWS:

(A) TO EXISTING POURED CONCRETE: (Min. f'c = 3 ksi)
- 1/4"ø TAPCON OR TAPCON WITH ADVANCED THREADFORM TECHNOLOGY ANCHORS, AS MANUFACTURED BY I.T.W. BUILDEX. (Min. f'c = 3 ksi)
- 1/4"ø x 3/4" ALL POINTS SOLID-SET ANCHORS, AS DISTRIBUTED BY ALL POINTS SCREW, BOLT & SPECIALTY COMPANY. (Min. f'c = 3 ksi)
- 1/4"ø BLUE TAP CONCRETE ANCHORS W/ CAP AS MANUFACTURED BY FLORIDA FASTENERS DIRECT, INC. (Min. f'c = 2 ksi)
- 1/4"ø TAPPER+ ANCHORS AS MANUFACTURED BY POWERS FASTENERS, INC., AND DISTRIBUTED BY ALL POINTS SCREW, BOLT & SPECIALTY COMPANY OR ANY OTHER APPROVED LICENSED OR AUTHORIZED VENDOR REGISTERED WITH THE AMERICAN SHUTTER SYSTEMS ASSOCIATION, INC. (Min. f'c = 3 ksi)

NOTES:

A.1) MINIMUM EMBEDMENT INTO POURED CONCRETE OF TAPCON OR TAPCON WITH ADVANCED THREADFORM TECHNOLOGY ANCHORS AND TAPPER+ ANCHORS IS 1 3/4", AND FOR BLUE TAP W/ CAP ANCHORS IS 1 1/2".

A.2) MINIMUM EMBEDMENT OF 1/4"ø x 3/4" ALL POINTS SOLID-SET ANCHORS SHALL BE 7/8" INTO THE POURED CONCRETE. NO EMBEDMENT INTO STUCCO SHALL BE PERMITTED. 1/4"ø-20 S.S. MACHINE SCREW USED SHALL BE 1 1/2" LONG MINIMUM SHOULD STUCCO EXIST, AND 1" MINIMUM FOR WALLS WITH NO STUCCO.

A.3) IN CASE THAT PRECAST STONE, PRECAST CONCRETE PANELS, PAVERS OR ANY VENEER BE FOUND ON THE EXISTING WALL OR FLOOR, ANCHORS SHALL BE LONG ENOUGH TO REACH THE MAIN STRUCTURE BEHIND SAID WALL FINISHES. ANCHORAGE SHALL BE AS INDICATED ON NOTES A.1) & A.2) ABOVE. FOR INSTALLATIONS ON VINYL SIDING OR EIFS WITH OR WITHOUT METAL STUDS CONSULT THIS ENGINEER. FOR INSTALLATION INTO EIFS WITH METAL STUDS SEE SHEET 20.

(B) TO EXISTING CONCRETE BLOCK: (ASTM C-90)
- 1/4"ø TAPCON OR TAPCON WITH ADVANCED THREADFORM TECHNOLOGY ANCHORS, AS MANUFACTURED BY I.T.W. BUILDEX.
- 1/4"ø x 3/4" ALL POINTS SOLID-SET ANCHORS, AS DISTRIBUTED BY ALL POINTS SCREW, BOLT & SPECIALTY COMPANY.
- 1/4"ø BLUE TAP CONCRETE ANCHORS W/ CAP AS MANUFACTURED BY FLORIDA FASTENERS DIRECT, INC.
- 1/4"ø TAPPER+ ANCHORS AS MANUFACTURED BY POWERS FASTENERS, INC., AND DISTRIBUTED BY ALL POINTS SCREW, BOLT & SPECIALTY COMPANY OR ANY OTHER APPROVED LICENSED OR AUTHORIZED VENDOR REGISTERED WITH THE AMERICAN SHUTTER SYSTEMS ASSOCIATION, INC.

NOTES:

B.1) MINIMUM EMBEDMENT INTO CONCRETE BLOCK OF TAPCON, BLUE TAP W/ CAP ANCHORS AND TAPPER+ ANCHORS IS 1 1/4" AND TAPCON WITH ADVANCED THREADFORM TECHNOLOGY ANCHORS IS 1".

B.2) MINIMUM EMBEDMENT OF 1/4"ø x 3/4" ALL POINTS SOLID-SET ANCHORS SHALL BE ENTIRELY EMBEDDED INTO THE CONCRETE BLOCK. NO EMBEDMENT INTO STUCCO SHALL BE PERMITTED. 1/4" ø-20 S.S. MACHINE SCREW USED SHALL BE 1 1/2" LONG MINIMUM SHOULD STUCCO EXIST, AND 1" MINIMUM FOR WALLS WITH NO STUCCO.

B.3) IN CASE THAT PRECAST STONE, PRECAST CONCRETE PANELS, PAVERS OR ANY VENEER BE FOUND ON THE EXISTING WALL OR FLOOR, ANCHORS SHALL BE LONG ENOUGH TO REACH THE MAIN STRUCTURE BEHIND SAID WALL FINISHES. ANCHORAGE SHALL BE AS INDICATED ON NOTES B.1) & B.2) ABOVE. FOR INSTALLATIONS ON VINYL SIDING OR EIFS WITH OR WITHOUT METAL STUDS CONSULT THIS ENGINEER. FOR INSTALLATION INTO EIFS WITH METAL STUDS SEE SHEET 20.

(C) ANCHORS SHALL BE INSTALLED FOLLOWING ALL OF THE RECOMMENDATIONS AND SPECIFICATIONS OF THE ANCHOR'S MANUFACTURER.

(D) SEE SCHEDULE BELOW FOR EDGE DISTANCE (E.D.) VERSUS SPACING RELATIONSHIP FOR ANCHORS.

EDGE DISTANCE VERSUS SPACING SCHEDULE FOR ANCHORS:

MAXIMUM ANCHOR SPACINGS ARE VALID FOR EDGE DISTANCES INDICATED BELOW. FOR E. D. LESS THAN THE INDICATED, REDUCE ANCHOR SPACING BY MULTIPLYING SPACING SHOWN ON SCHEDULE BY THE FOLLOWING FACTORS. REDUCED SPACING OBTAINED USING FACTOR SHALL NOT BE LESS THAN MINIMUM SPACING INDICATED FOR EACH ANCHOR TYPE.

ACTUAL EDGE DICTANCE E.D.	FACTOR							
	TAPCON	TAPCON WITH ADVANCED THREADFORM TECHNOLOGY		ALL POINT SOLID SET	BLUE TAP W/ CAP	TAPPER + MIN. SPACING		
	MIN. SPACING = 3"	MIN. SPACING = 3"		MIN. SPACING = 3 1/2"	MIN. SPACING = 3"	3 3/4"	4"	
	POURED CONCRETE & CONCRETE BLOCK MIN. E.D. = 3"	POURED CONCRETE MIN. E.D. = 3 1/2"	CONCRETE BLOCK MIN. E.D. = 2 1/2"	POURED CONCRETE & CONCRETE BLOCK MIN. E.D. = 3 1/2"	POURED CONCRETE & CONCRETE BLOCK MIN. E.D. = 3"	POURED CONCRETE MIN. E.D. = 3 1/2"	CONCRETE BLOCK MIN. E.D. = 2 1/2"	
3"	1.0	0.90	1.0	0.78	1.0	0.84	1.0	
2 1/2"	—	0.81	1.0	—	—	0.67	1.0	
2"	—	0.71	—	—	—	0.51	—	
1 3/4"	—	0.91	—	—	—	0.43	—	
1 1/2"	0.35	—	—	—	—	0.35	—	

TEXAS DEPARTMENT OF INSURANCE – 2006

P.E. SEAL/SIGNATURE/DATE

WALTER A. TILLIT Jr. P.E.
PROFESSIONAL ENGINEER

6355 N.W. 36 STREET, STE. 305
VIRGINIA GARDENS, FL 33166
PHONE (305) 871-1530 FAX (305) 871-1531

TEXAS LIC. # 90691

FIRM REGISTRATION # F-13790

A.S.S.A.
American Shutter Systems Association, Inc.
4268 Westroads Drive
West Palm Beach, FL 33407

© 2012 EASTERN METAL SUPPLY, INC.

BERTHA HV™
Accordion Shutter System
H.V. BLADE #1 W/ OR W/O H.V. WINDOW BLADE

REV. No	DESCRIPTION	DATE
1		
2		
3		
4		
5		
6		

DRAWN BY: A.G.
DATE: 11/03/12
DRAWING No 12-169
SHEET 13 OF 20

MAXIMUM ANCHOR* SPACING (in.) SCHEDULE FOR A GIVEN MAX. SHUTTER SPAN, DESIGN NEGATIVE PRESSURE RATING AND A CORRESPONDING MOUNTING TYPE FOR CONCRETE OR CONCRETE BLOCK INSTALLATIONS

(SEE MOUNTINGS I, J, K & L ON SHEET 7)

MAXIMUM SPAN (ft)	POURED CONCRETE																POURED CONCRETE/CONCRETE BLOCK															
	(I) WALK OVER & (II) TRENCH MOUNTINGS ◊								(J) RAINGUARD MOUNTING								(K) WALL/FLOOR MOUNTING								(L) WALL/WALK OVER MOUNTING							
	DESIGN NEGATIVE PRESSURE RATING (psf)								DESIGN NEGATIVE PRESSURE RATING (psf)								DESIGN NEGATIVE PRESSURE RATING (psf)								DESIGN NEGATIVE PRESSURE RATING (psf)							
	30	40	60	75	90	120	160	205	30	40	60	75	90	120	160	205	30	40	60	75	90	120	160	205	30	40	60	75	90	120	160	205
3'-0" OR LESS	14	12	10	9	8	8	6	6	12	12	12	12	12	11.5	8.5	6.5	7	7	7	7	7	7	7	5.5	5	5	5	5	5	5	5	5
	14	12	10	9	8	8	6	6	12	12	12	12	12	12	9.5	7	7	7	7	7	7	7	7	7	5	5	5	5	5	5	5	5
	14	12	10	9	8	8	6	6	12	12	12	12	10.5	8	6	4.5	7	7	7	7	7	7	7	6.5	5	5	5	5	5	5	5	5
	14	12	10	9	8	8	6	6	12	12	12	12	12	10	7.5	6	7	7	7	7	7	7	7	7	5	5	5	5	5	5	5	5
4'-0"	14	12	10	9	8	8	6	6	12	12	12	12	11.5	8.5	6.5	5	7	7	7	7	7	7	5.5	4	5	5	5	5	5	5	5	4
	14	12	10	9	8	8	6	6	12	12	12	12	12	9.5	7	5.5	7	7	7	7	7	7	7	7	5	5	5	5	5	5	5	5
	14	12	10	9	8	8	6	6	12	12	12	9.5	8	6	4.5	3.5	7	7	7	7	7	7	6.5	5	5	5	5	5	5	5	5	5
	14	12	10	9	8	8	6	6	12	12	12	12	10	7.5	5.5	4	7	7	7	7	7	7	7	5.5	5	5	5	5	5	5	5	5
5'-0"	14	12	10	9	8	8	6	6	12	12	12	11	9	7	5	4	7	7	7	7	7	5.5	4	3	5	5	5	5	5	5	4	3
	14	12	10	9	8	8	6	6	12	12	12	12	10	7.5	5.5	4	7	7	7	7	7	7	7	7	5	5	5	5	5	5	5	5
	14	12	10	9	8	8	6	6	12	12	9.5	7.5	6	4.5	3.5	—	7	7	7	7	7	7	5	3.5	5	5	5	5	5	5	5	4
	14	12	10	9	8	8	6	6	12	12	12	9.5	8	6	4.5	—	7	7	7	7	7	7	5.5	4	5	5	5	5	5	5	5	4
	14	12	10	9	8	8	6	6	12	12	11.5	9	7.5	5.5	4	3	7	7	7	7	7	4.5	3.5	—	5	5	5	5	5	4.5	3.5	—
6'-0"	14	12	10	9	8	8	6	6	12	12	12	10	8	6	4.5	3.5	7	7	7	7	7	7	7	7	5	5	5	5	5	5	5	5
	14	12	10	9	8	8	6	6	12	12	8	6	5	4	3	—	7	7	7	7	7	5.5	4	—	5	5	5	5	5	5	4	3
	14	12	10	9	8	8	6	6	12	12	10	8	6.5	5	3.75	—	7	7	7	7	7	6	4.5	—	5	5	5	5	5	5	4.5	—
	14	12	10	9	8	8	6	6	12	12	10	8	6.5	5	3.5	—	7	7	7	6.5	5.5	4	—	—	5	5	5	5	5	5	4	3
7'-0"	14	12	10	9	8	8	6	6	12	12	12	8.5	7	5	4	3	7	7	7	7	7	7	7	6	5	5	5	5	5	5	5	5
	14	12	10	9	8	8	6	6	12	10	6.5	5	4.5	3	—	—	7	7	7	7	6.5	5	3	—	5	5	5	5	5	5	3.5	3
	14	12	10	9	8	8	6	6	12	12	8.5	7	5.5	4	—	—	7	7	7	7	7	5	—	—	5	5	5	5	5	5	4	—
	14	12	10	9	8	8	6	—	12	12	8.5	7	5.5	4	3	—	7	7	7	5.5	4.5	3	—	—	5	5	5	5	4.5	3.5	—	—
8'-0"	14	12	10	9	8	8	6	—	12	12	10.5	7.5	6	4.5	3.5	—	7	7	7	7	7	7	7	4	5	5	5	5	5	5	5	5
	14	12	10	9	8	8	6	—	12	9	6	4.5	4	3	—	—	7	7	7	7	5.5	4	—	—	5	5	5	5	5	4	3	—
	14	12	10	9	8	8	6	—	12	11	7.5	6	5	3.75	—	—	7	7	7	7.5	6	4.5	—	—	5	5	5	5	5	4.5	—	—
	14	12	10	9	8	8	—	—	12	11.5	7.5	6	5	3.5	—	—	7	7	6.5	5	4	—	—	—	5	5	5	5	4	3	—	—
9'-0"	14	12	10	9	8	8	—	—	12	12	9.5	6.5	5.5	4	3	—	7	7	7	7	7	7	6	3	5	5	5	5	5	5	5	5
	14	12	10	9	8	8	—	—	10.5	8	5	4	3.5	—	—	—	7	7	7	8	5	3.5	—	—	5	5	5	5	5	4	3	—
	14	12	10	9	8	8	—	—	12	10	6.5	5	4.5	—	—	—	7	7	7	6.5	5.5	—	—	—	5	5	5	5	5	4	—	—
	14	12	10	9	8	8	—	—	12	10.5	7	5.5	4.5	3.5	—	—	7	7	5.5	4.5	3.5	—	—	—	5	5	5	4.5	3.5	—	—	—
10'-0"	14	12	10	9	8	8	—	—	12	11	8.5	6	5	3.5	—	—	7	7	7	7	7	7	4.5	—	5	5	5	5	5	5	5	4.5
	14	12	10	9	8	8	—	—	9.5	7	4.5	3.5	3	—	—	—	7	7	7	5.5	4.5	—	—	—	5	5	5	5	4.5	3.5	—	—
	14	12	10	9	8	8	—	—	12	9	6	5	4	—	—	—	7	7	7	6	5	—	—	—	5	5	5	4.5	5	—	—	—
	14	12	10	9	8	8	—	—	12	9.5	6	5	4	3	—	—	7	7	5	4	3	—	—	—	5	5	5	4	3.5	—	—	—
11'-0"	14	12	10	9	8	8	—	—	12	10	7	5.5	4.5	3.5	—	—	7	7	7	7	7	7	3.5	—	5	5	5	5	5	5	5	4
	14	12	10	9	8	8	—	—	8.5	6.5	4	3.5	3	—	—	—	7	7	6	5	4	—	—	—	5	5	5	5	4	3	—	—
	14	12	10	9	8	8	—	—	11	8	5.5	4	—	—	—	—	7	7	7	5.5	4.5	—	—	—	5	5	5	5	4.5	—	—	—
	14	12	10	9	8	—	—	—	11.5	8.5	5.5	4.5	3.5	—	—	—	7	7	4.5	3.5	—	—	—	—	5	5	4.5	3.5	3	—	—	—
12'-0"	14	12	10	9	8	—	—	—	12	9.5	6.5	5	4	3	—	—	7	7	7	7	7	6	3	—	5	5	5	5	5	5	4.5	3.5
	14	12	10	9	8	—	—	—	8	6	4	3	—	—	—	—	7	7	5.5	4.5	3.5	—	—	—	5	5	5	4.5	4	3	—	—
	14	12	10	9	8	—	—	—	10	7.5	5	4	—	—	—	—	7	7	6	5	—	—	—	—	5	5	5	5	4	—	—	—
	14	12	10	9	8	—	—	—	10.5	8	5	4	3.5	—	—	—	7	6.5	4.5	3.5	—	—	—	—	5	5	4.5	3.5	3	—	—	—
13'-0"	14	12	10	9	8	—	—	—	11.5	8.5	6	4.5	3.5	3	—	—	7	7	7	7	7	4.5	—	—	5	5	5	5	5	5	4.5	3.5
	14	12	10	9	8	—	—	—	7	5.5	3.5	3	—	—	—	—	7	7	5	4	3	—	—	—	5	5	5	4	3	—	—	—
	14	12	10	9	8	—	—	—	9	7	4.5	3.75	—	—	—	—	7	7	5.5	4.5	—	—	—	—	5	5	5	4.5	4	—	—	—
	14	12	10	9	—	—	—	—	10	7.5	5	4	3	—	—	—	7	6	4	3	—	—	—	—	5	5	4	3	—	—	—	—
14'-0"	14	12	10	9	—	—	—	—	10.5	8	5.5	4	3.5	—	—	—	7	7	7	7	7	4	—	—	5	5	5	5	5	5	4	3
	14	12	10	9	—	—	—	—	6.5	5	3	—	—	—	—	—	7	7	5	3.5	—	—	—	—	5	5	5	4	—	—	—	—
	14	12	10	9	—	—	—	—	8.5	6.5	4	—	—	—	—	—	7	7	5	4	—	—	—	—	5	5	5	4	—	—	—	—
	14	12	10	—	—	—	—	—	9	7	4.5	3.5	3	—	—	—	7	5.5	3.5	—	—	—	—	—	5	5	3.5	3	—	—	—	—
15'-0"	14	12	10	—	—	—	—	—	10	7.5	5	4	3	—	—	—	7	7	7	7	7	3.5	—	—	5	5	5	5	5	5	4	3
	14	12	10	—	—	—	—	—	6	4.5	3	—	—	—	—	—	7	7	4.5	3	—	—	—	—	5	5	4.5	3.5	—	—	—	—
	14	12	10	—	—	—	—	—	8	6	4	—	—	—	—	—	7	7	5	—	—	—	—	—	5	5	5	4	—	—	—	—
	14	12	10	—	—	—	—	—	8.5	6.5	4	3.5	—	—	—	—	7	5.5	3.5	—	—	—	—	—	5	5	3.5	—	—	—	—	—
16'-0"	14	12	10	—	—	—	—	—	9.5	7	4.5	3.5	3	—	—	—	7	7	7	7	6	3	—	—	5	5	5	5	5	4.5	3.5	—
	14	12	10	—	—	—	—	—	6	4.5	3	—	—	—	—	—	7	6.5	4	—	—	—	—	—	5	5	4	3.5	—	—	—	—
	14	12	10	—	—	—	—	—	7.5	5.5	3.75	—	—	—	—	—	7	7	4.5	—	—	—	—	—	5	5	4.5	—	—	—	—	—

ANCHORS SPACING LEGEND

TAPCON OR TAPCON WITH ADVANCED THREADFORM TECHNOLOGY
ALL POINTS SOLID-SET
BLUE TAP
TAPPER+

* SEE ANCHOR SPECIFICATIONS ON SHEET 13

◊ VALID ONLY FOR UP TO +70, -75 PSF DESIGN PRESSURE RATING & FOR SPANS PER SCHEDULE #3, SHEET 11

(1) HV BLADE ONLY

TEXAS DEPARTMENT OF INSURANCE – 2006

P.E. SEAL/SIGNATURE/DATE

WALTER A. TILLIT Jr. P.E.
PROFESSIONAL ENGINEER

6355 N.W. 36 STREET, STE. 305
VIRGINIA GARDENS, FL 33166
PHONE (305) 871-1530 FAX (305) 871-1531

TEXAS LIC. # 90691

FIRM REGISTRATION # F-13790

A.S.S.A.
American Shutter Systems Association, Inc.
4268 Westroads Drive
West Palm Beach, FL 33407

© 2012 EASTERN METAL SUPPLY, INC.

BERTHA HV™
Accordion Shutter System
H.V. BLADE #1 W/ OR W/O H.V. WINDOW BLADE

REV. No	DESCRIPTION	DATE
1		
2		
3		
4		
5		
6		

DRAWN BY: A.G.
DATE: 11/03/12
DRAWING No 12-169
SHEET 14 OF 20

MAXIMUM DESIGN PRESSURE RATING (p.s.f.) AND CORRESPONDING MAXIMUM ANCHOR SPACING (in.) SCHEDULE FOR A GIVEN MAX. SHUTTER SPAN, NEGATIVE DESIGN PRESSURE RATING AND A CORRESPONDING MOUNTING TYPE.

(SEE MOUNTINGS ON SHEETS 16 & 17).

SUBSTRATE

MAXIMUM SPAN (ft)	SOUTHERN PINE No. 2 W/ MIN. G=0.55, DOUGLAS FIR W/ MIN. G=0.50												SPRUCE PINE FIR NORTH W/ MIN. G=0.43											
	WALL MOUNTINGS M, N, O & R						CEILING MOUNT T FLOOR MOUNTINGS W & X						WALL MOUNTINGS M, N, O & R						CEILING MOUNT T FLOOR MOUNTINGS W & X					
	DESIGN NEGATIVE PRESSURE RATING (psf)						DESIGN NEGATIVE PRESSURE RATING (psf)						DESIGN NEGATIVE PRESSURE RATING (psf)						DESIGN NEGATIVE PRESSURE RATING (psf)					
	30	40	60	75	90	105	30	40	60	75	90	105	30	40	60	75	90	105	30	40	60	75	90	105
3'-0" OR LESS	12	10	10	9	8	8	6	6	6	6	6	6	12	10	10	9	8	8	6	6	6	6	6	6
4'-0"	12	10	10	9	8	8	6	6	6	6	6	6	12	10	10	9	8	8	6	6	6	6	6	6
5'-0"	12	10	10	9	8	8	6	6	6	6	6	5.5	12	10	10	9	8	8	6	6	6	6	6	5
6'-0"	12	10	10	9	8	6.5	6	6	6	6	5.5	4.5	12	10	10	9	8	5	6	6	6	5.5	5	4.5
7'-0"	12	10	10	9	6.5	4	6	6	6	5.5	4.5	4	12	10	10	9	5	3	6	6	6	5	4	3.5
8'-0"	12	10	10	7.5	4.5	3	6	6	6	5	4	3.5	12	10	10	6	3.5	–	6	6	5	4.5	3.5	3
9'-0"	12	10	10	5	3.5	–	6	6	5.5	4.5	3.5	3	12	10	9	4	–	–	6	6	4.5	4	3	3
10'-0"	12	10	7.5	4	–	–	6	6	5	4	3	–	12	10	6	3	–	–	6	6	4	3.5	3	–
11'-0"	12	10	5.5	–	–	–	6	6	4.5	–	–	–	12	10	4.5	–	–	–	6	5.5	3.5	–	–	–
12'-0"	12	10	4.5	–	–	–	6	6	4	–	–	–	12	10	3.5	–	–	–	6	5	3.5	–	–	–
13'-0"	12	10	–	–	–	–	6	6	–	–	–	–	12	10	–	–	–	–	6	4.5	–	–	–	–
14'-0"	12	10	–	–	–	–	6	5.5	–	–	–	–	12	7	–	–	–	–	5.5	4.5	–	–	–	–
15'-0"	12	–	–	–	–	–	6	–	–	–	–	–	12	–	–	–	–	–	5	–	–	–	–	–
16'-0"	12	–	–	–	–	–	6	–	–	–	–	–	12	–	–	–	–	–	5	–	–	–	–	–

MAXIMUM SPAN (ft)	SPRUCE PINE FIR SOUTH W/ MIN. G=0.36												1/2" MIN. CDX PLYWOOD					
	WALL MOUNTINGS M, N, O & R						CEILING MOUNT T FLOOR MOUNTINGS W & X						WALL MOUNTINGS P & Q					
	DESIGN NEGATIVE PRESSURE RATING (psf)						DESIGN NEGATIVE PRESSURE RATING (psf)						DESIGN NEGATIVE PRESSURE RATING (psf)					
	30	40	60	75	90	105	30	40	60	75	90	105	30	40	60	75	90	105
3'-0" OR LESS	12	10	10	9	8	8	6	6	6	6	6	6	6	5	4	4	4	3
4'-0"	12	10	10	9	8	8	6	6	6	6	6	5	6	5	4	4	4	3
5'-0"	12	10	10	9	8	7	6	6	6	6	6	5	6	5	4	4	4	3
6'-0"	12	10	10	9	6	3.5	6	6	6	6	5	4.5	6	5	4	4	3.5	–
7'-0"	12	10	10	7	3.5	–	6	6	6	5	4	3.5	6	5	4	4	–	–
8'-0"	12	10	10	4	–	–	6	6	5	4.5	3.5	3	6	5	4	–	–	–
9'-0"	12	10	4	3	–	–	6	6	4.5	4	3	3	6	5	3.5	–	–	–
10'-0"	12	10	3	–	–	–	6	6	4	3.5	3	–	6	5	–	–	–	–
11'-0"	12	10	–	–	–	–	6	5.5	4	–	–	–	6	5	–	–	–	–
12'-0"	12	10	–	–	–	–	6	5	3.5	–	–	–	6	5	–	–	–	–
13'-0"	12	7.5	–	–	–	–	6	4.5	–	–	–	–	6	4.5	–	–	–	–
14'-0"	12	7	–	–	–	–	5.5	4.5	–	–	–	–	6	3	–	–	–	–
15'-0"	12	–	–	–	–	–	5	–	–	–	–	–	6	–	–	–	–	–
16'-0"	11.5	–	–	–	–	–	5	–	–	–	–	–	6	–	–	–	–	–

MAXIMUM SPAN (ft)	SOUTHERN PINE No. 2 W/ MIN. G=0.55, DOUGLAS FIR W/ MIN. G=0.50						SPRUCE PINE FIR NORTH W/ MIN. G=0.43						SPRUCE PINE FIR SOUTH W/ MIN. G=0.36					
	B.O. WALL MOUNTINGS S & V						B.O. WALL MOUNTINGS S & V						B.O. WALL MOUNTINGS S & V					
	DESIGN NEGATIVE PRESSURE RATING (psf)						DESIGN NEGATIVE PRESSURE RATING (psf)						DESIGN NEGATIVE PRESSURE RATING (psf)					
	30	40	60	75	90	105	30	40	60	75	90	105	30	40	60	75	90	105
3'-0" OR LESS	12	12	12	12	12	12	12	12	12	12	12	12	12	12	12	12	12	12
4'-0"	12	12	12	12	12	12	12	12	12	12	12	12	12	12	12	12	12	10.5
5'-0"	12	12	12	12	12	12	12	12	12	12	12	12	12	12	12	12	10	8.5
6'-0"	12	12	12	12	12	12	12	12	12	12	12	10.5	12	12	12	10.5	8.5	7.5
7'-0"	12	12	12	12	12	12	12	12	12	12	11	9.5	12	12	11.5	9	7.5	6.5
8'-0"	12	12	12	12	12	10.5	12	12	12	11.5	9.5	8.5	12	12	10	8	6.5	5.5
9'-0"	12	12	12	12	11.5	9.5	12	12	12	10.5	8.5	7.5	12	12	9	7	6	5
10'-0"	12	12	12	12	10	8.5	12	12	12	9.5	8	7	12	12	8	6.5	5.5	4.5
11'-0"	12	12	12	11.5	9.5	8	12	12	11	8.5	7	6	12	11.5	7.5	6	5	4
12'-0"	12	12	12	10.5	8.5	7.5	12	12	10	8	6.5	5.5	12	10.5	7	5.5	4.5	4
13'-0"	12	12	12	9.5	8	6	12	12	9.5	7.5	6	4.5	12	9.5	6.5	5	4	3
14'-0"	12	12	11	9	7.5	5	12	12	8.5	7	6	4	12	9	6	5	4	–
15'-0"	12	12	10.5	8.5	6.5	4	12	12	8	6.5	5	3	11.5	8.5	5.5	4.5	3.5	–
16'-0"	12	12	10.5	8.5	6.5	4	12	12	8	6.5	5	3	11.5	8.5	5.5	4.5	3.5	–

(1) HV BLADE OR (1) HV BLADE W/ (1A) HV WINDOW BLADE WORKING IN UNISON◆

◆ SEE LIMITATIONS OF USE FOR BLADE (1A) ON SHEET 19

+ NOTES ON ANCHORS REQUIREMENTS: WOOD SUBSTRATES.

1. ANCHORS TO WALL, FLOOR OR SOLID WOOD SOFFIT SHALL BE AS FOLLOWS:

– 1/4"ø TAPCON ANCHORS, AS MANUFACTURED BY I.T.W. BUILDEX W/ MINIMUM EMBEDMENT AS INDICATED AT EACH SECTION ON SHEETS 16 & 17.
EXCEPTION: SEE NOTE 2 BELOW.

2. ANCHORS TO HOLLOW CEILING SHALL BE AS PER MOUNTING TYPE U, SHEET 17 AND SHALL CONSIST OF LAG SCREWS AS PER NDS 2005 SPECIFICATIONS.

3. SUBSTRATE SHALL CONSIST OF THE FOLLOWING:
–SOUTHERN PINE No. 2 W/ G=0.55 (N.D.S)
–DOUGLAS FIR W/ G=0.50 (N.D.S.)
–SPRUCE PINE FIR NORTH W/ G=0.43 (N.D.S.)
–SPRUCE PINE FIR SOUTH W/ G=0.36 (N.D.S.)
–MIN. 1/2" CDX PLYWOOD (1986 APA)

4. ANCHORS SHALL BE INSTALLED FOLLOWING ALL OF THE RECOMMENDATIONS AND SPECIFICATIONS OF THE ANCHOR'S MANUFACTURER.

TEXAS DEPARTMENT OF INSURANCE – 2006

STATE OF TEXAS
2/6/14
P.E. SEAL/SIGNATURE/DATE

WALTER A. TILLIT Jr. P.E.
PROFESSIONAL ENGINEER
6355 N.W. 36 STREET, STE. 305
VIRGINIA GARDENS, FL 33166
PHONE (305) 871-1530 FAX (305) 871-1531
TEXAS LIC. # 90691
FIRM REGISTRATION # F-13790

A.S.S.A.
American Shutter Systems Association, Inc.
4268 Westroads Drive
West Palm Beach, FL 33407

© 2012 EASTERN METAL SUPPLY, INC.

BERTHA HV™
Accordion Shutter System
H.V. BLADE #1 W/ OR W/O H.V. WINDOW BLADE

REV. No	DESCRIPTION	DATE
1		
2		
3		
4		
5		
6		

DRAWN BY: A.G.
DATE: 11/03/12
DRAWING No 12-169
SHEET 15 OF 20

INSTALLATION DETAILS ON EXISTING WOOD BUILDINGS FOR (1) HV & (1A) HV◆ BLADES (AS APPLICABLE)

MAX. SHUTTER SPAN L+ OR L− FOR INSTALLATIONS INTO WOOD WITH HV BLADE (1) ONLY SHALL BE LIMITED TO 105.0 psf. DESIGN PRESSURE RATING, SEE SHEET 19 FOR MAX SPAN & DESIGN PRESSURE RATING FOR INSTALLATION WITH BLADE (1) & (1A) WORKING IN UNISON

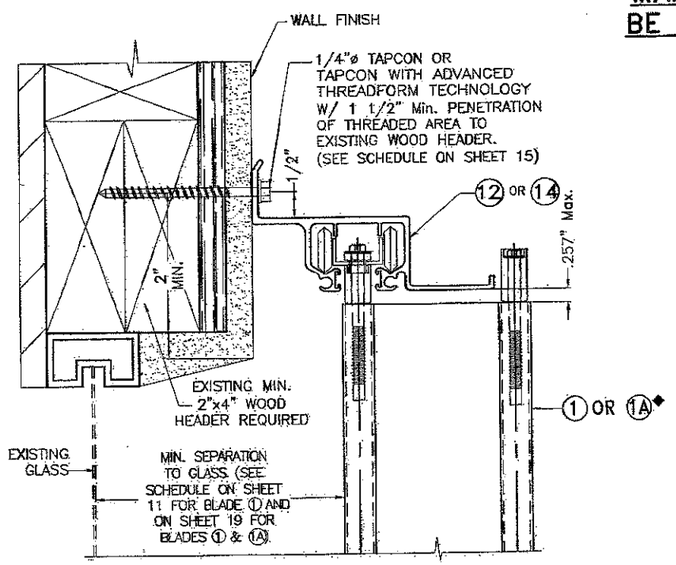

(M) HV WALL HEADER INSTALLATION

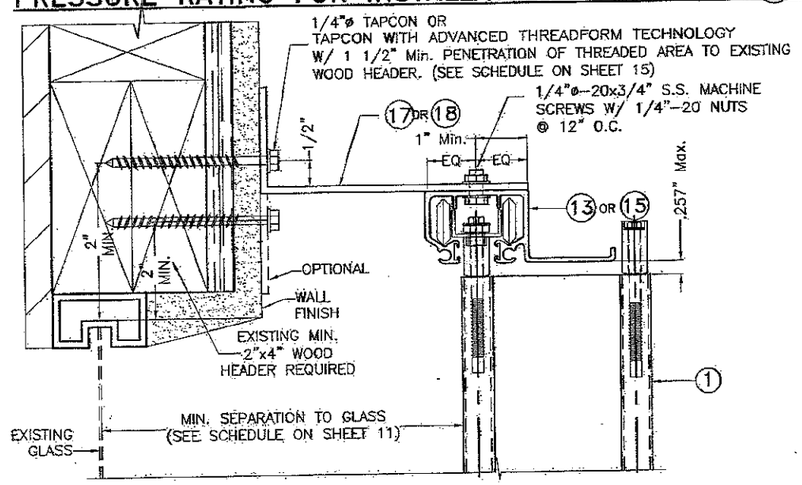

(N) HV WALL HEADER INSTALLATION

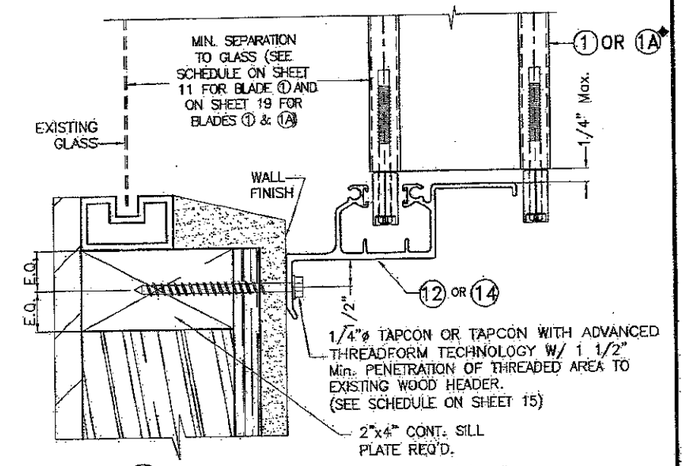

(O) HV WALL SILL INSTALLATION

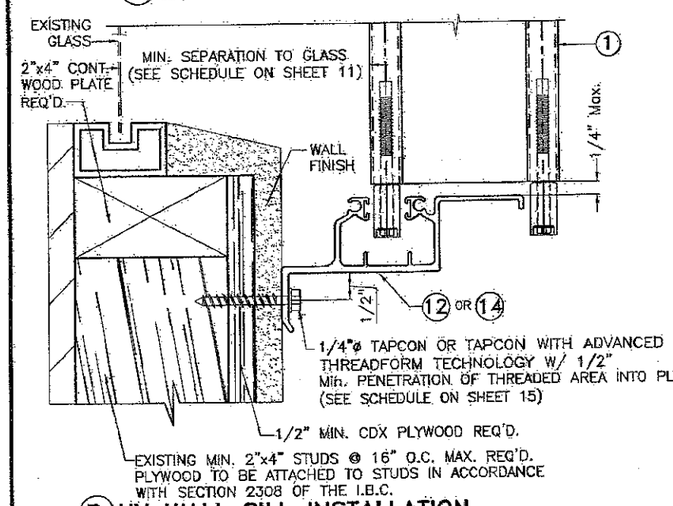

(P) HV WALL SILL INSTALLATION

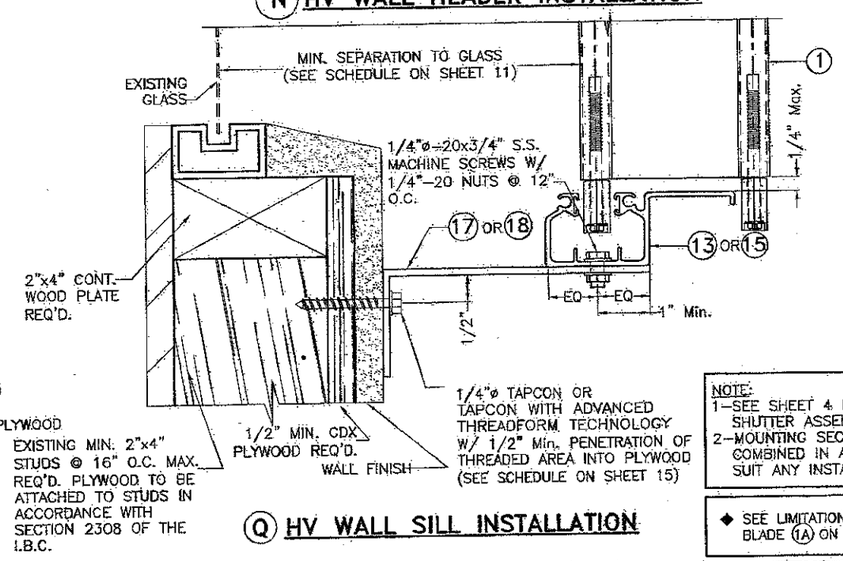

(Q) HV WALL SILL INSTALLATION

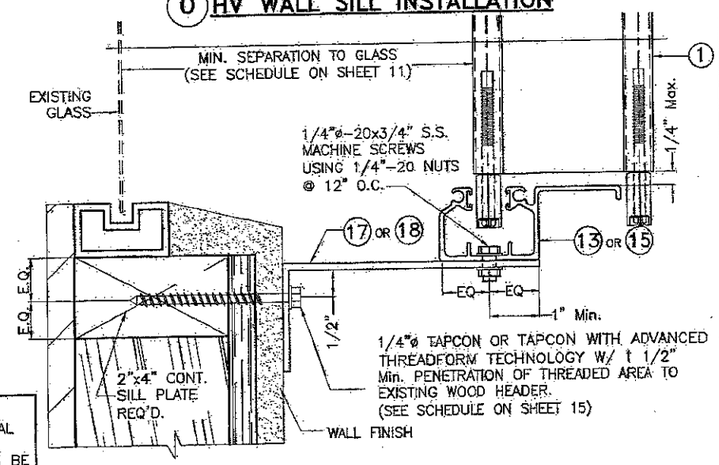

(R) HV WALL SILL INSTALLATION

NOTE:
1–SEE SHEET 4 FOR TYPICAL SHUTTER ASSEMBLY.
2–MOUNTING SECTIONS CAN BE COMBINED IN ANY WAY TO SUIT ANY INSTALLATION.

◆ SEE LIMITATIONS OF USE OF BLADE (1A) ON SHEET (19)

TEXAS DEPARTMENT OF INSURANCE – 2006

© 2012 EASTERN METAL SUPPLY, INC.

STATE OF TEXAS
7/6/14

P.E. SEAL/SIGNATURE/DATE

WALTER A. TILLIT Jr. P.E.
PROFESSIONAL ENGINEER
6355 N.W. 36 STREET, STE. 305
VIRGINIA GARDENS, FL 33166
PHONE (305) 871-1530 FAX (305) 871-1531
TEXAS LIC. # 90691
FIRM REGISTRATION # F-13790

A.S.S.A.
American Shutter Systems Association, Inc.
4268 Westroads Drive
West Palm Beach, FL 33407

BERTHA HV™
Accordion Shutter System
H.V. BLADE #1 W/ OR W/O H.V. WINDOW BLADE

REV. No	DESCRIPTION	DATE	DRAWN BY: A.G.
1			DATE: 11/03/12
2			DRAWING No
3			12-169
4			
5			SHEET
6			16 OF 20

INSTALLATION DETAILS ON EXISTING WOOD BUILDINGS FOR (1) HV & (1A) HV◆ BLADES (AS APPLICABLE)

MAX. SHUTTER SPAN L+ OR L− FOR INSTALLATIONS INTO WOOD WITH HV BLADE (1) ONLY SHALL BE LIMITED TO 105.0 psf. DESIGN PRESSURE RATING. SEE SHEET 19 FOR MAX SPAN & DESIGN LOAD FOR INSTALLATION WITH BLADE (1) & (1A) WORKING IN UNISON

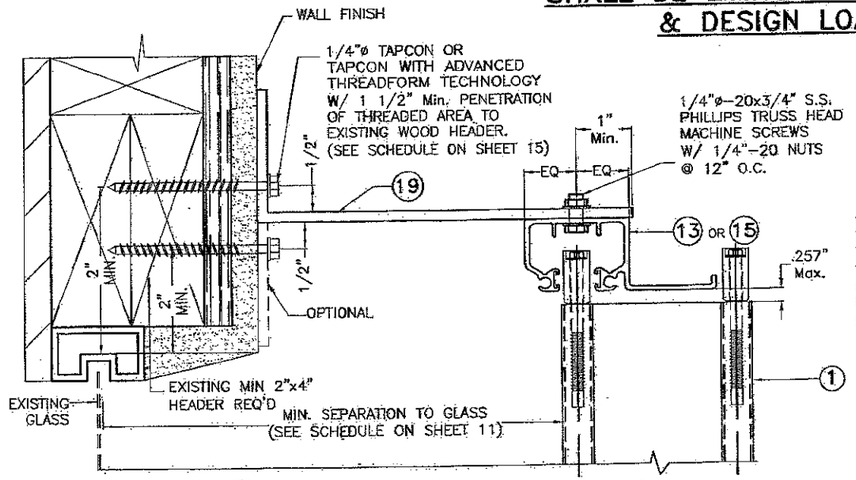

(S) HV WALL HEADER INSTALLATION

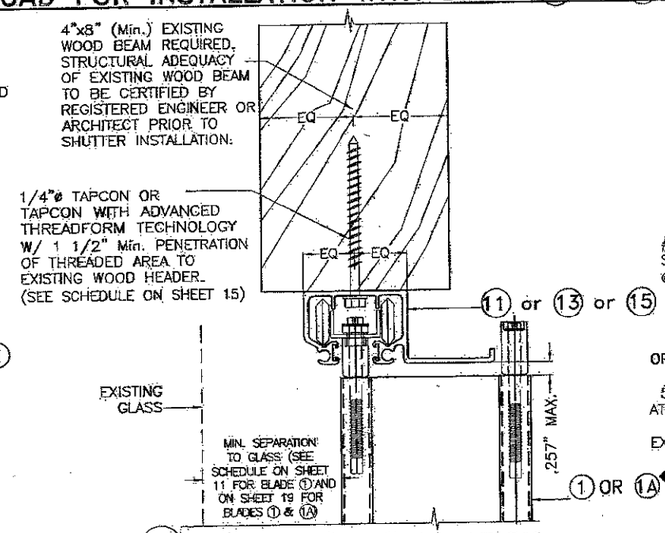

(T) HV CEILING INSTALLATION

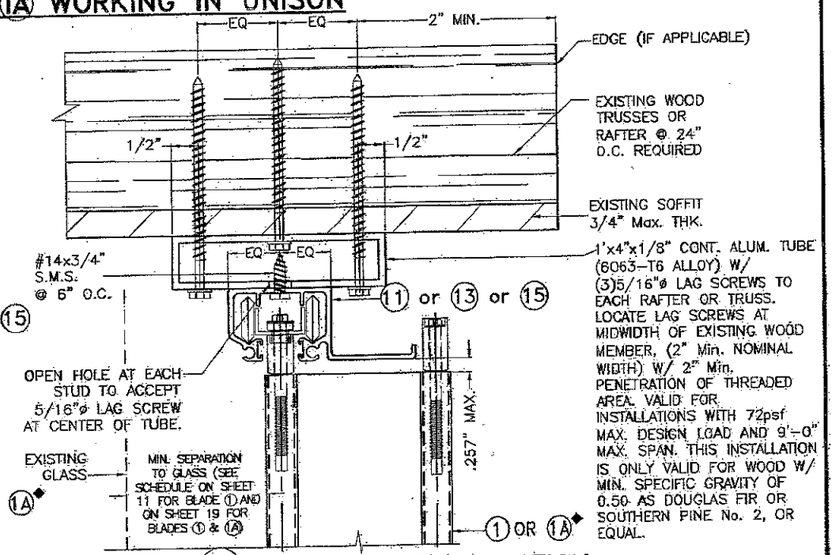

(U) HV CEILING INSTALLATION

NOTES:
1–SEE SHEET 4 FOR TYPICAL SHUTTER ASSEMBLY
2–MOUNTING SECTIONS CAN BE COMBINED IN ANY WAY TO SUIT ANY INSTALLATION.

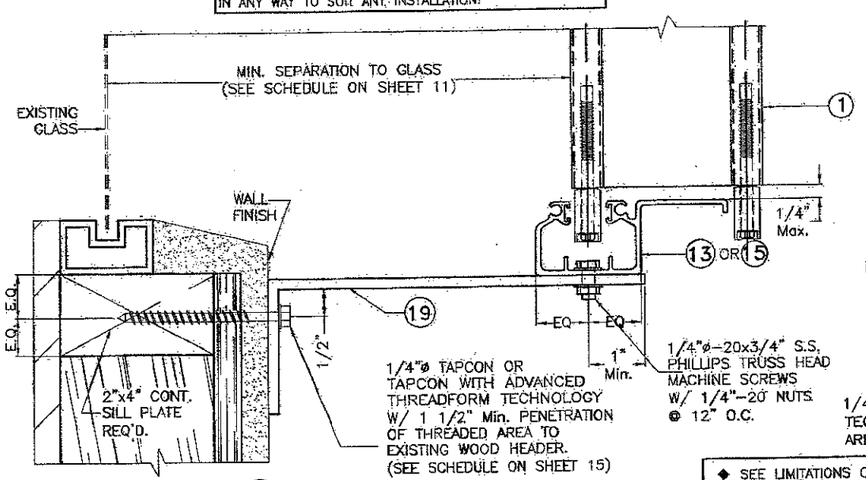

(V) HV WALL SILL INSTALLATION

◆ SEE LIMITATIONS OF USE FOR BLADE (1A) ON SHEET 19

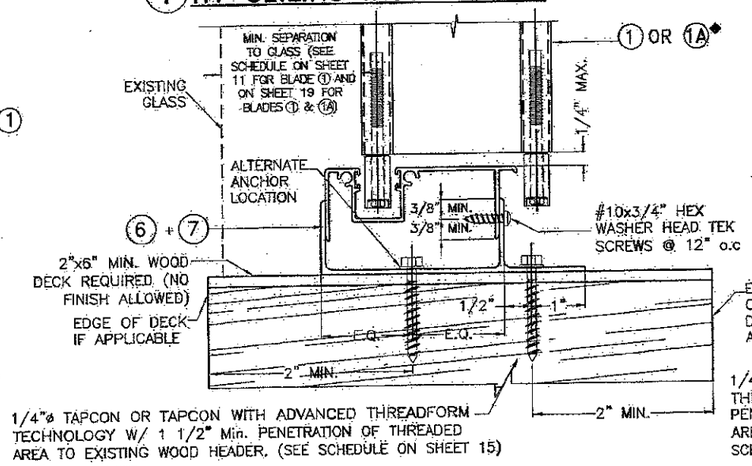

(W) HV FLOOR INSTALLATION

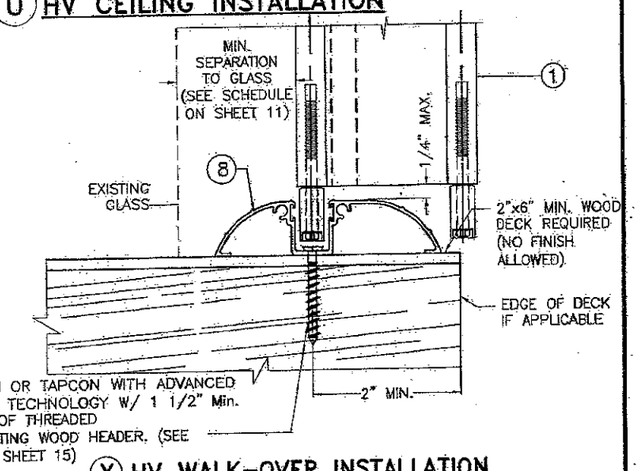

(X) HV WALK–OVER INSTALLATION

TEXAS DEPARTMENT OF INSURANCE – 2006

© 2012 EASTERN METAL SUPPLY, INC.

STATE OF TEXAS
7/6/19
P.E. SEAL/SIGNATURE/DATE

WALTER A. TILLIT Jr. P.E.
PROFESSIONAL ENGINEER
6355 N.W. 36 STREET, STE. 305
VIRGINIA GARDENS, FL 33166
PHONE (305) 871–1530 FAX (305) 871–1531
TEXAS LIC. # 90691
FIRM REGISTRATION # F–13790

A.S.S.A.
American Shutter Systems Association, Inc.
4268 Westroads Drive
West Palm Beach, FL 33407

BERTHA HV™
Accordion Shutter System
H.V. BLADE #1 W/ OR W/O H.V. WINDOW BLADE

REV. No	DESCRIPTION	DATE
1		
2		
3		
4		
5		
6		

DRAWN BY: A.G.
DATE: 11/03/12
DRAWING No 12–169
SHEET 17 OF 20

END INSTALLATIONS (1) HV BLADE OR (1A) WINDOW BLADE INTO 2"x4" MIN. WOOD STUDS

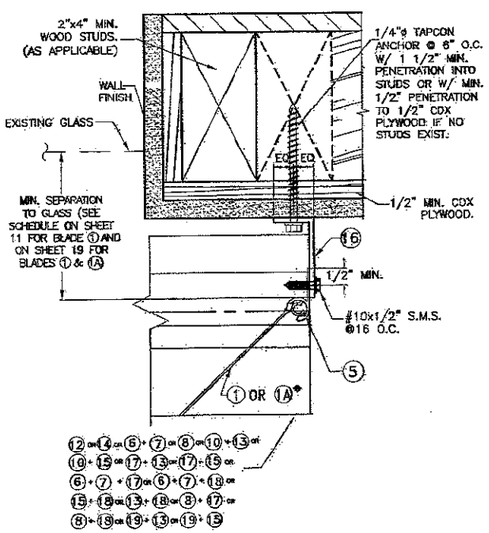

END CONNECTION DETAIL (7)

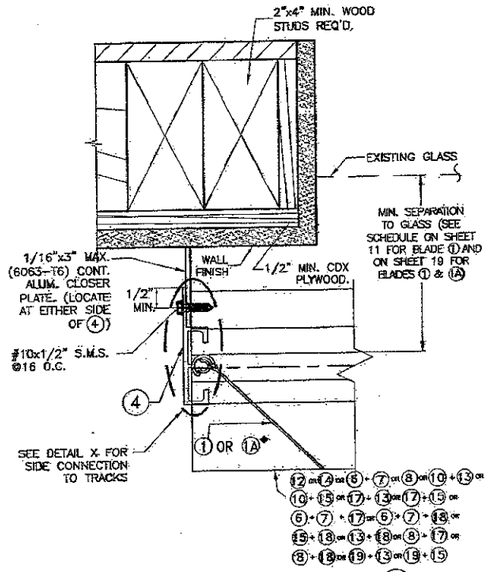

END CONNECTION DETAIL (8)

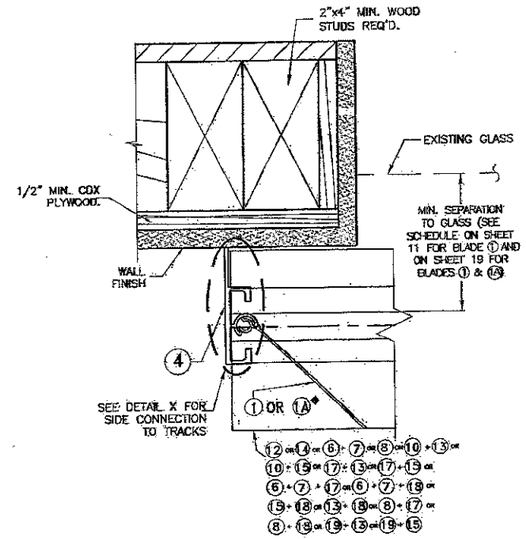

END CONNECTION DETAIL (9)

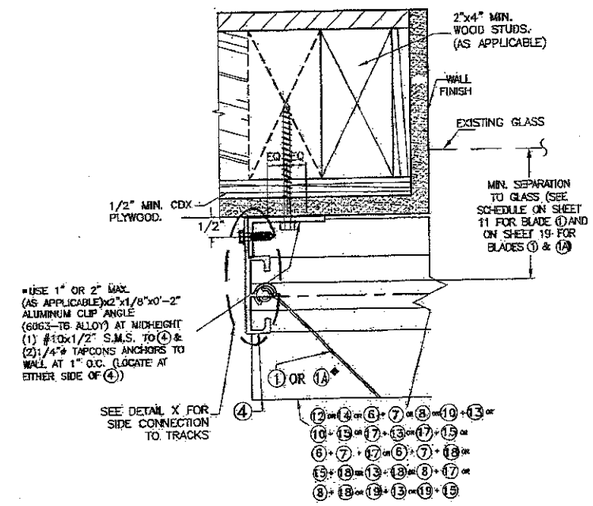

END CONNECTION DETAIL (10)

■ REQUIRED ONLY FOR SPANS GREATER THAN 12'-0"

◆ SEE LIMITATIONS OF USE FOR BLADE (1A) ON SHEET 19

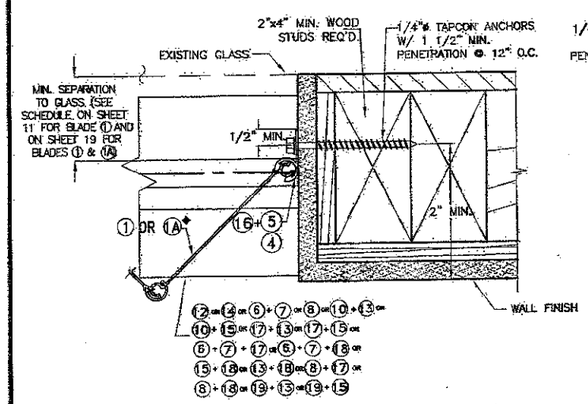

END CONNECTION DETAIL (11)

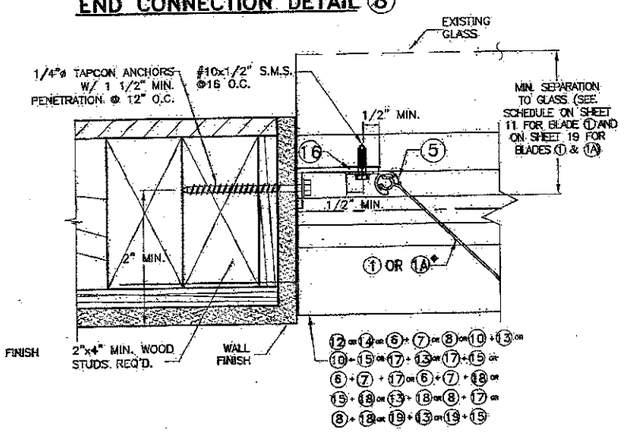

END CONNECTION DETAIL (12)

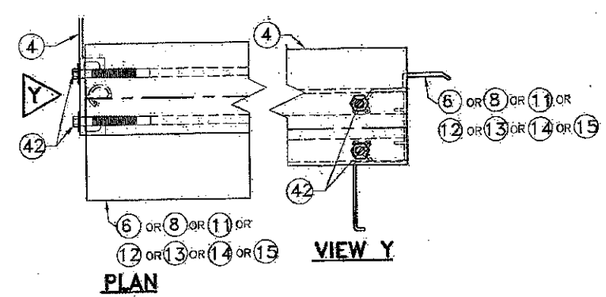

DETAIL X

TEXAS DEPARTMENT OF INSURANCE – 2006

© 2012 EASTERN METAL SUPPLY, INC.

STATE OF TEXAS
2/6/14
P.E. SEAL/SIGNATURE/DATE

WALTER A. TILLIT Jr. P.E.
PROFESSIONAL ENGINEER
6355 N.W. 36 STREET, STE. 305
VIRGINIA GARDENS, FL 33166
PHONE (305) 871-1530 FAX (305) 871-1531
TEXAS LIC. # 90691
FIRM REGISTRATION # F-13790

A.S.S.A.
American Shutter Systems Association, Inc.
4268 Westroads Drive
West Palm Beach, FL 33407

BERTHA HV™
Accordion Shutter System
H.V. BLADE #1 W/ OR W/O H.V. WINDOW BLADE

REV. No	DESCRIPTION	DATE	DRAWN BY: A.G.
1			DATE: 11/03/12
2			DRAWING No
3			12-169
4			
5			SHEET
6			18 OF 20

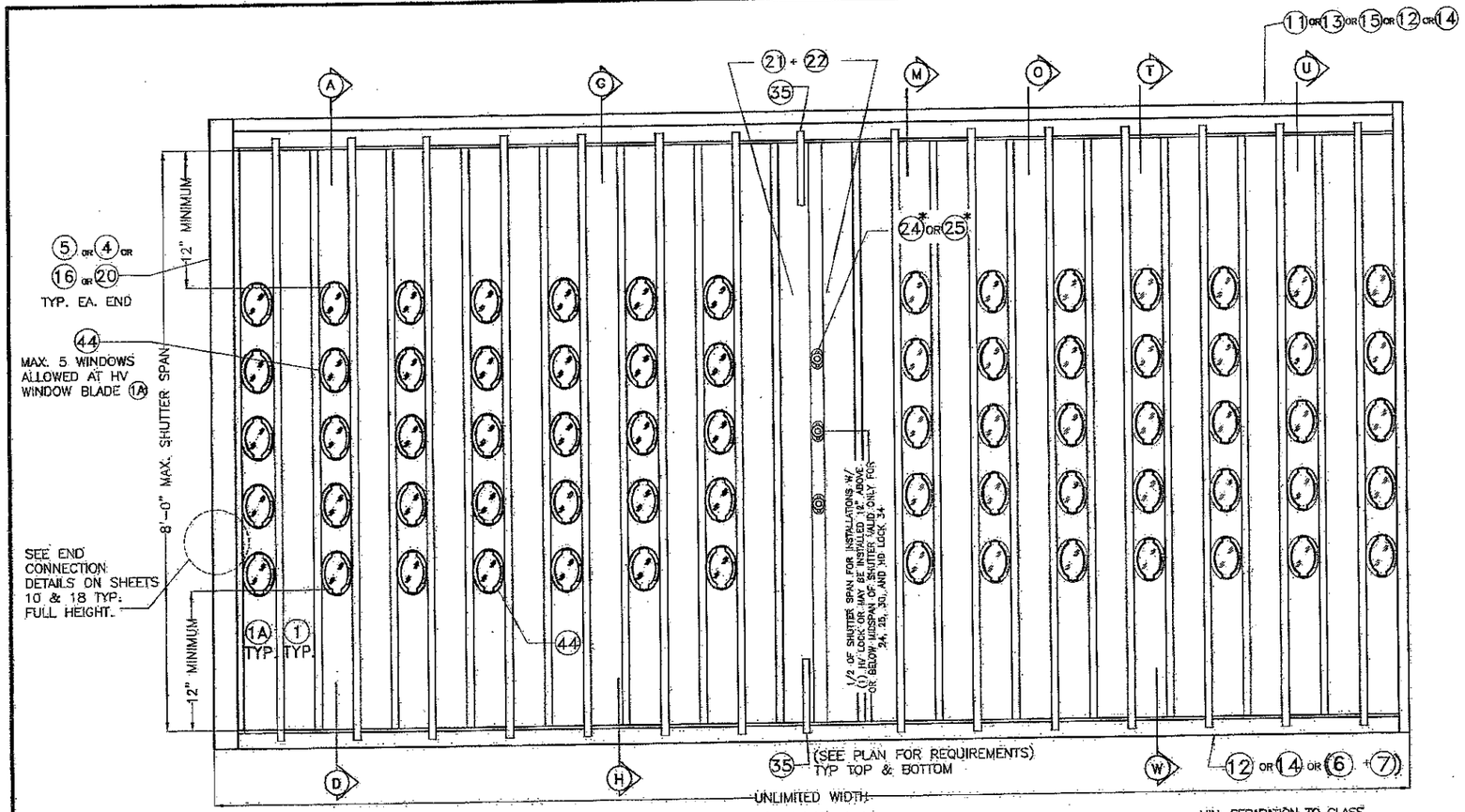

ELEVATION

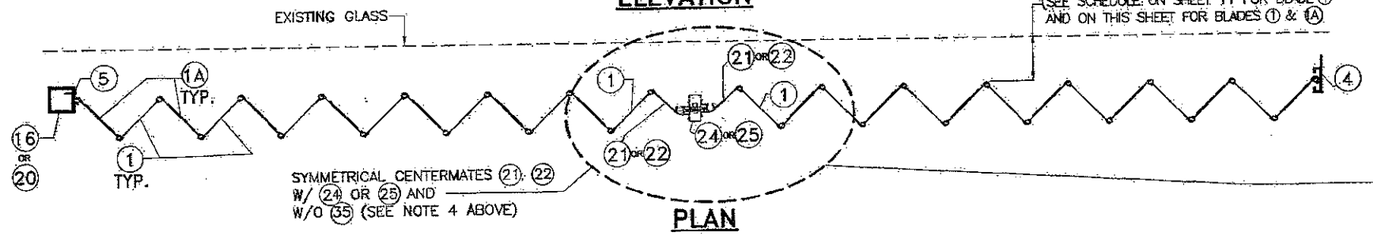

PLAN

TYPICAL 1 HV BLADE WORKING IN UNISON WITH HV WINDOW BLADE 1A SHUTTER*

N.T.S.

* GENERAL LIMITATIONS AND CONDITIONS OF USE FOR BERTHA 1 HV BLADE ACCORDION SHUTTER SYSTEM WORKING IN UNISON WITH HV WINDOW BLADE 1A

1. MAX. DESIGN PRESSURE RATING: +110, – 110 p.s.f.

2. MAX. SHUTTER SPAN: 96"

3. ALLOWED MOUNTINGS: A, D, G & H ON SHEETS 6, 7; AS WELL AS MOUNTINGS M, O, T, U & W ON SHEETS 16 & 17.

4. ONLY CENTERMATES 21, 22 (BOTH W/ 24 OR 25) ARE ALLOWED WITH 21, 22 ARRANGED IN A SYMMETRICAL OR OPPOSING LAYOUT. IN CASE OF OPPOSING LAYOUT, 35 MUST BE INCLUDED ONLY AT EXTERIOR ACCESS SIDE OF CENTERMATE.

5. (A) HV WINDOW BLADE 1A SHALL ONLY ALLOW A MAXIMUM OF 5 OPENINGS (3"ϕ HOLES) FOR 44 PER BLADE AT SPACINGS SHOWN ON SHEET 4.

(B) MIN. CLEARANCE FROM TOP OR BOTTOM EDGE OF HV WINDOW BLADE 1A OF ANY 3"ϕ HOLE FOR 44 SHALL BE 12".

(C) FIRST OR LAST BLADE COMING OUT FROM STARTERS AT ENDS MAY BE HV WINDOW BLADE 1A

(D) HV WINDOW BLADE 1A MUST BE USED ALTERNATE TO A SOLID HV BLADE 1 THROUGHOUT SHUTTER'S WIDTH.

(E) CENTERMATES SHALL ALWAYS BE INSTALLED ADJACENT TO A SOLID HV BLADE 1 AT EITHER SIDE OF THEM.

(F) POLYCARBONATE HV WINDOW 44 SHALL BE INSTALLED SO THAT TABS FACE THE INTERIOR OF THE OPENING BEING PROTECTED. HV WINDOW 44 MUST BE ONLY INSTALLED AND LOCKED USING A HV SETTING TOOL PROVIDED BY ASSA, INC.

6. SEE ANCHOR SPACING SCHEDULE FOR INSTALLATIONS INTO WOOD FRAME BUILDINGS ON SHEET 15, AS LIMITED BY SPAN AND DESIGN LOAD (SEE NOTES 1 & 2 ABOVE).

7. SEE ANCHOR SPACING SCHEDULE FOR INSTALLATIONS INTO POURED CONCRETE OR CONCRETE BLOCK WALL ON SHEETS 12 & 13 AS LIMITED BY SPAN AND DESIGN LOAD (SEE NOTES 1 & 2 ABOVE).

8. MINIMUM SEPARATION TO GLASS SCHEDULE, PER ASTM E-1996:

WIND ZONE	MINIMUM SEPARATION TO GLASS
1 THRU 3	1"
4	6.25"

ALTERNATE OPPOSING CENTERMATES 21,22 W/ 35(EXTERIOR ONLY) AND W/ 24 OR 25 (SEE NOTE 4 ABOVE)

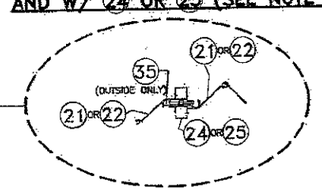

TEXAS DEPARTMENT OF INSURANCE – 2006

© 2012 EASTERN METAL SUPPLY, INC.

STATE OF TEXAS
7/9/14
P.E. SEAL/SIGNATURE/DATE

WALTER A. TILLIT Jr. P.E.
PROFESSIONAL ENGINEER
6355 N.W. 36 STREET, STE. 305
VIRGINIA GARDENS, FL 33166
PHONE (305) 871-1530 FAX (305) 871-1531
TEXAS LIC. # 90691
FIRM REGISTRATION # F-13790

A.S.S.A.
American Shutter Systems Association, Inc.
4268 Westroads Drive
West Palm Beach, FL 33407

BERTHA HV™
Accordion Shutter System
H.V. BLADE #1 W/ OR W/O H.V. WINDOW BLADE

REV. No	DESCRIPTION	DATE
1		
2		
3		
4		
5		
6		

DRAWN BY: A.G.
DATE: 11/03/12
DRAWING No 12-169
SHEET 19 OF 20

INSTALLATIONS W/ (1) HV BLADE & HV CENTERMATES (21) INTO METAL STUD WALLS *

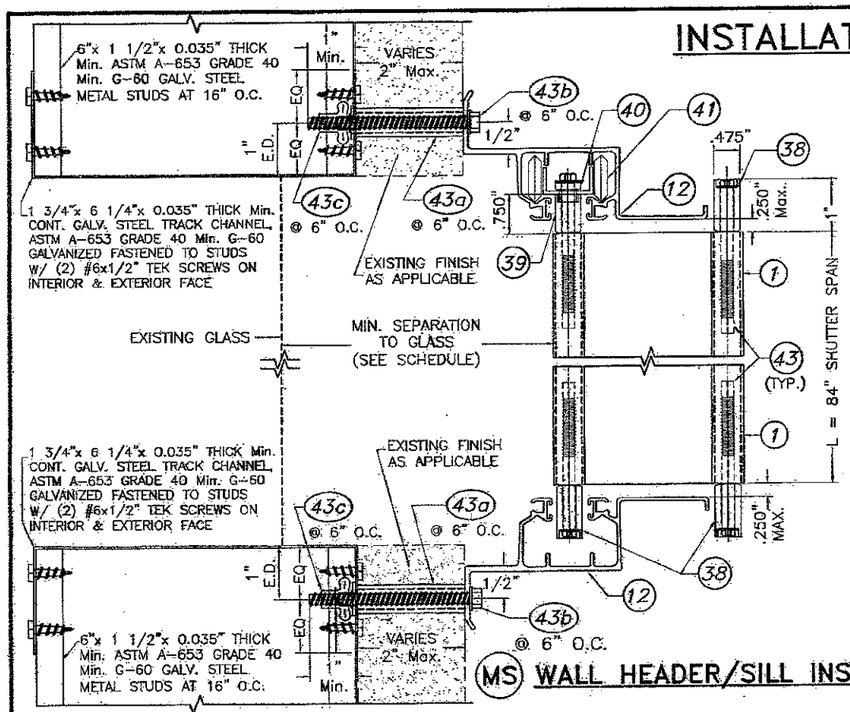

(MS) WALL HEADER/SILL INSTALLATION

* GENERAL LIMITATIONS AND CONDITIONS OF USE FOR BERTHA (1) HV BLADE ACCORDION SHUTTER SYSTEM INSTALLATION TO METAL STUD WALLS

1. MAX. DESIGN PRESSURE RATING: +75, – 75 (psf)
2. MAX. SHUTTER SPAN: 84"
3. ALLOWED MOUNTING: (MS) ON THIS SHEET.
4. ONLY CENTERMATE (21) W/ (24) HV LOCK ARE ALLOWED WITH (21) ARRANGED IN A SYMMETRICAL LAYOUT. USE OF (2) (35) (6" LONG, MINIMUM) MUST ALWAYS BE INCLUDED AT EXTERIOR OR INTERIOR ACCESS SIDE OF CENTERMATE.

** BLADE SLACK DETAIL HVF IS ALSO VALID FOR CENTERMATE (21) APPLICATION WITH BLADE (1)

SEPARATION TO GLASS SCHEDULE

WIND ZONE ASTM E-1996	MINIMUM SEPARATION TO GLASS
1 THRU 3	1"
4	4"

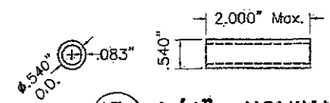

(43a) 1/4"ø NOMINAL ALUMINUM SLEEVE
6063-T5 ALLOY

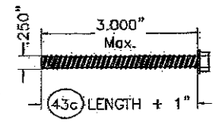

(43b) 1/4"ø-20X3" BOLT
MUST PENETRATE (43c) 1"

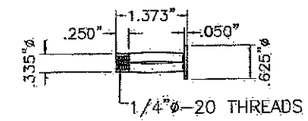

(43c) 1/4"ø ELCO CONSTRUCTION PRODUCTS FAB-LOK HD

COMPONENTS

SCALE: 3/8"= 1"

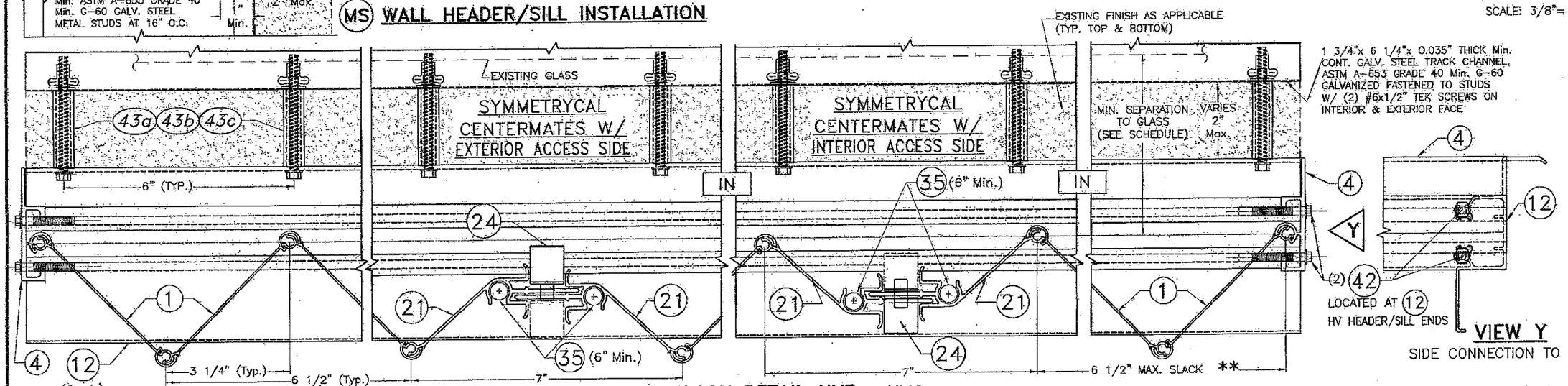

TEXAS DEPARTMENT OF INSURANCE – 2006

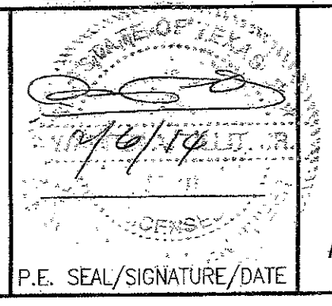

P.E. SEAL/SIGNATURE/DATE

WALTER A. TILLIT Jr. P.E.
PROFESSIONAL ENGINEER

6355 N.W. 36 STREET, STE. 305
VIRGINIA GARDENS, FL 33166
PHONE (305) 871-1530 FAX (305) 871-1531

TEXAS LIC. # 90691

FIRM REGISTRATION # F-13790

A.S.S.A.
American Shutter Systems Association, Inc.
4268 Westroads Drive
West Palm Beach, FL 33407

© 2012 EASTERN METAL SUPPLY, INC.

BERTHA HV™
Accordion Shutter System
H.V. BLADE #1 W/ OR W/O H.V. WINDOW BLADE

REV. No	DESCRIPTION	DATE
1		
2		
3		
4		
5		
6		

DRAWN BY: A.G.
DATE: 11/03/12.
DRAWING No 12-169
SHEET 20 OF 20