STORM SMART INDUSTRIES

WIND ABATEMENT SYSTEM

INSTALLATION ANCHORAGE DETAILS FOR ROLL-UP AND SLIDE SCREENS - 60 PSF DESIGN PRESSURE

GENERAL NOTES:

1. PTC PRODUCT DESIGN GROUP, LLC HAS NO CONTROL OF THE MANUFACTURING, PERFORMANCE, OR INSTALLATION OF THIS PRODUCT. THESE GENERIC PLANS WERE ENGINEERED IN ACCORDANCE WITH ACCEPTED ENGINEERING PRACTICES AND TEST DATA PROVIDED BY THE MANUFACTURER.
2. THE WIND ABATEMENT SCREEN SYSTEM SHOWN ON THIS PRODUCT EVALUATION DOCUMENT HAS BEEN DESIGNED IN ACCORDANCE WITH THE 2006 INTERNATIONAL BUILDING CODE. DESIGN WIND LOADS SHALL BE DETERMINED AS PER SECTION 1609 OF THE ABOVE REFERENCED CODE, IN ACCORDANCE WITH ASCE 7–05, AND FOR A BASIC WIND SPEED AS REQUIRED BY THE JURISDICTION WHERE THE WIND ABATEMENT SCREEN SYSTEM WILL BE INSTALLED. THE WIND ABATEMENT SCREEN SYSTEM ADEQUACY FOR IMPACT, DEFLECTION AND FATIGUE RESISTANCE HAS BEEN VERIFIED IN ACCORDANCE WITH SECTION 1609.1.2 OF THE ABOVE REFERENCED CODE AND AS PER ASTM E330, E1886, & E1996 AT FENESTRATION TESTING LABORATORY, INC. PER THEIR REPORTS (SEE LIST OF REPORTS).
3. LIMITATIONS OF USE:
   - A. MAXIMUM SIZE: 60 PSF MAXIMUM PRESSURE
     MAXIMUM WIDTHS AND HEIGHTS SHOWN IN ELEVATIONS DRAWINGS ON THE FOLLOWING PAGES.
   - B. IMPACT LEVEL: 9–1/4lb. LARGE MISSILE IMPACT LEVEL D
   - C. ANCHORING OR LOADING CONDITIONS OTHER THAN THOSE SHOWN IN THESE DETAILS ARE NOT PART OF THIS APPROVAL.
   - D. THIS PRODUCT CAN BE USED AS A WIND–BORNE DEBRIS SHUTTER PRODUCT.
4. IT SHALL BE THE RESPONSIBILITY OF THE CONTRACTOR TO VERIFY THAT THE EXISTING STRUCTURE IS DESIGNED TO SUPPORT THE MINIMUM LOADS SHOWN ON THE TABLES ON SHEET 3. EXISTING STRUCTURES NOT ABLE TO SUPPORT THESE LOADS SHALL BE EVALUATED AS A SITE SPECIFIC PROJECT. SEE NOTE 4 OF PRODUCT EVALUATION NOTES. INSTALLATIONS SHALL ACCOMMODATE SCREEN FABRIC DEFLECTIONS SHOWN IN "SCREEN FABRIC DEFLECTION (IN) VS. PRESSURE (PSF)" TABLE ON SHEET 2.
5. ALL ALUMINUM EXTRUSION SHALL BE 6063–T6 ALLOY (UNLESS OTHERWISE NOTED).
6. ALL SCREEN PANELS SHALL BE PERMANENTLY LABELED WITH AT LEAST ONE LABEL STATING:
   STORM SMART INDUSTRIES
   6182 IDLEWILD STREET, FORT MYERS, FL 33966
   TEXAS PRODUCT APPROVAL NO. #
   TEST STANDARDS
   OPENING No. #
7. FOR DETERMINING INTERNAL PRESSURE IN THE ABOVE REFERENCED CODES, THIS PRODUCT IS CLASSIFIED AS NON–POROUS, HAVING A POROSITY OF LESS THEN 10%, FOR THE CONDITIONS SHOWN IN THIS PRODUCT EVALUATION DOCUMENT. SCREEN PANELS MUST COMPLETELY COVER AN OPENING IN ALL DIRECTIONS.
8. THE ROLL–UP SCREEN SHALL BE STORED IN THE UP POSITION AND THE SLIDE SCREENS STORED IN A DESIGNATED AND ACCESSIBLE AREA DURING NORMAL WEATHER CONDITIONS.

PRODUCT EVALUATION NOTES:

1. THIS PRODUCT EVALUATION DOCUMENT (P.E.D.) PREPARED BY THIS ENGINEER IS GENERIC AND DOES NOT PROVIDE INFORMATION FOR A SITE SPECIFIC PROJECT; i.e. WHERE THE SITE CONDITIONS DEVIATE FROM THE P.E.D.
2. CONTRACTOR TO BE RESPONSIBLE FOR THE SELECTION, PURCHASE AND INSTALLATION OF THIS PRODUCT BASED ON THIS PRODUCT EVALUATION PROVIDED AND SHALL NOT DEVIATE FROM THE CONDITIONS DETAILED ON THIS DOCUMENT.
3. THIS PRODUCT EVALUATION DOCUMENT WILL BE CONSIDERED INVALID IF ALTERED (i.e. HIGHLIGHTED, MARKED ETC.) BY ANY MEANS.
4. SITE SPECIFIC PROJECTS SHALL BE PREPARED BY A TEXAS LICENSED ENGINEER OR ARCHITECT WHICH WILL BECOME THE ENGINEER OF RECORD (E.O.R.) FOR THE PROJECT AND WHO WILL BE RESPONSIBLE FOR THE PROPER USE OF THE P.E.D. THE ENGINEER OF RECORD, ACTING AS A DELEGATED ENGINEER TO THE P.E.D. ENGINEER, SHALL SUBMIT SITE SPECIFIC DRAWINGS FOR REVIEW.

ANCHOR & FASTENING NOTES

1. ALL FASTENERS SHALL BE CORROSION RESISTANT COATED CARBON STEEL AS PER DIN 50018 OR STAINLESS STEEL 304 OR 316 SERIES WITH 50 KSI YIELD POINT AND 90 KSI ULTIMATE TENSILE STRENGTH.
2. NO EMBEDMENT INTO NON–STRUCTURAL COMPONENTS SUCH AS, STUCCO, TILE, SIDING, ETC. SHALL BE CONSIDERED AS PART OF THE EMBEDMENT.
3. THE ANCHOR SPACING ARE VALID FOR EDGE DISTANCES AND MINIMUM EMBEDMENT SHOWN IN THE FASTENER SCHEDULE ON SHEET 2. FOR EDGE DISTANCES LESS THAN SPECIFIED, THE ANCHOR SPACING SHALL BE REDUCED BY THE EDGE DISTANCE REDUCTION FACTORS SHOWN ON SHEET 2. THE EDGE DISTANCE SHALL NOT BE LESS THAN 1–1/4" IN CONCRETE, 1–9/16" IN CMU OR 1–9/16" IN WOOD, OR MINIMUM SPECIFIED BY THE MANUFACTURER. ANCHOR SPACING SHALL NOT BE LESS THAN 4". THE MINIMUM EDGE DISTANCE FOR THE 1/4"– 14 DRIL–FLEX SCREW IS 1/2". SCREWS IDENTIFIED AS 1/4" SELF–TAPPING SMS IN THIS DRAWING SHALL BE 1/4" –20 ELCO DRIL–FLEX STRUCTURAL DRILL SCREWS, EQUIVALENT OR BETTER.

TABLE OF CONTENTS

SHEET NO.	DESCRIPTION
1	NOTES, TABLE OF CONTENTS & DP TABLE
2	MATERIAL SPECS, FASTENER SCHEDULE, TEST REPORTS, STITCHING DETAILS, SCREEN DEFLECTIONS TABLE
3	LOADS ON EXISTING STRUCTURE
4	ROLL-UP SCREEN / ELEVATIONS AND SECTIONS
5	ROLL-UP & SLIDE SCREEN / ELEVATION & SECTIONS
6	ROLL-UP & SLIDE SCREEN / SECTION VIEWS
7	ROLL-UP & SLIDE SCREEN / DIRECT MOUNT DP'S
8	ROLL-UP & SLIDE SCREEN / BUILDOUTS DP'S
9	ROLL-UP & SLIDE SCREEN / BUILDINS DP'S

DESIGN PRESSURE (PSF)

DIRECTION	PRESSURE (PSF)
POSITIVE	60
NEGATIVE	60

PROJECT #310-0802

REV	DESCRIPTION	DATE	BY
A	PER EMAILS FROM TDI DATED 06/07/11 & 06/27/11	08/31/11	TJH

STORM SMART INDUSTRIES
6182 IDLEWILD STREET
FORT MYERS, FL 33966

TITLE: WIND ABATEMENT SYSTEM NOTES, TABLE OF CONTENTS & DP TABLE

DRAWN BY: RJA
DATE: 3/29/11
SCALE: N.T.S.
DRAWING NO: SSI0001
REV: A
SHEET: 1 OF 9

PREPARED BY:

PRODUCT DESIGN GROUP, LLC
P.O. Box 520775
Longwood, FL 32752-0775
Texas Cert. of Reg. No. F-13740
Phone: 321.690.1788
Fax: 321.690.1789
Email: info@pdc-corp.com

Robert J. Amoruso, P.E.
Texas P.E. No. 80817

8/31/11

STATE OF TEXAS
ROBERT JAMES AMORUSO
80817
LICENSED
PROFESSIONAL ENGINEER

FABRIC SPECIFICATION:

FIBER CONTENT: 100% POLYPROPYLENE
CONSTRUCTION: 3/4 BASKET–WEAVE, WARP – 60 ENDS PER INCH, WERE – 50 ENDS PER INCH
FINISH: CALENDERED
WEIGHT (ASTM D–3776): 7.6 –OZ/SQUARE YARD
SELVAGE: HEAT CUT OR WOVEN
TENSILE STRENGTH (GRAB METHOD, ASTM D – 4632): WARP – 540 lbs., WEFT – 425 lbs.
BURST STRENGTH (ASTM D – 3786): 825 PSI
TEAR STRENGTH (ASTM D – 4533): WARP – 200 lbs., WEFT – 170 lbs.
ABRASION RESISTANCE (ASTM D –4886) 95% STRENGTH RETAINED
PUNCTURE STRENGTH (ASTM D –4833) 190 lbs.
AIR FLOW: 230 CFM
UV RETENTION (ASTM D–G154): 90%

SEWING:

SIDE RAIL AND WEIGHT EDGES – 3 SINGLE ROWS OF STRAIGHT STITCH AT INTERVALS OF 1/4" USING A MINIMUM OF 138 DENIER POLYESTER THREAD (SEE STITCHING DETAIL AT RIGHT)

OTHER SCREEN EDGES – 3 SINGLE ROWS OF STRAIGHT STITCH AT INTERVALS OF 1 1/2" USING A MINIMUM OF 138 DENIER POLYESTER THREAD (SEE STITCHING DETAIL AT RIGHT)

EDGES:

3 1/2" QUAD FOLDED ALL AROUND THE PERIMETER THREE CONTINUOUS SEWING

GROMMETS:

#3 NICKEL PLATED BRONZE GROMMETS PLACED AT 1 1/4" FROM THE EDGE OF SCREEN

STRAP:

PATTERN: X100–1000
WIDTH/DIAMETER: 1.875" +/– .063
THICKNESS: .050" +/– .010
AVERAGE BREAK STRENGTH: 5000 LB
MATERIAL: POLYESTER

BUCKLE:
PATTERN: SPIKE TEETH GRIP
WIDTH/DIAMETER: 2.5" +/– .10
MATERIAL: ACETAL

BRACKET:
PATTERN: BENT PLATE
DIMENSIONS: 4.0" X .75" X .10"
HOLE SIZE: .31"ø
MATERIAL: 304 STAINLESS STEEL

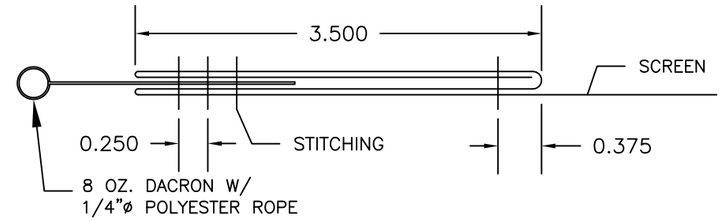

STITCHING DETAIL
SIDE RAIL AND WEIGHT EDGES - N.T.S.

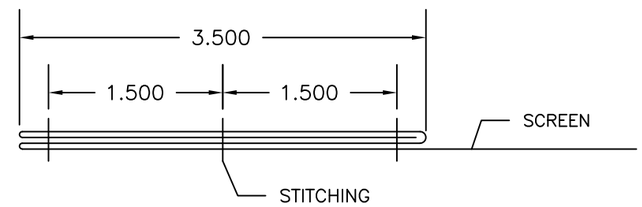

STITCHING DETAIL
OTHER SCREEN EDGES - N.T.S.

SCREEN FABRIC DEFLECTION (IN) VS. PRESSURE (PSF)												
PRESSURE (PSF)	SCREEN FABRIC SPAN (FEET)											
	24	22	20	18	16	14	12	10	8	6	4	3
60	31.7	29.1	26.4	23.8	21.1	18.5	15.9	13.2	10.6	7.9	5.3	4.0
55	30.9	28.3	25.8	23.2	20.6	18.0	15.5	12.9	10.3	7.7	5.2	3.9
50	30.1	27.6	25.1	22.6	20.1	17.6	15.1	12.5	10.0	7.5	5.0	3.8
45	29.3	26.9	24.4	22.0	19.5	17.1	14.6	12.2	9.8	7.3	4.9	3.7
40	28.5	26.1	23.7	21.4	19.0	16.6	14.2	11.9	9.5	7.1	4.7	3.6
35	27.7	25.4	23.1	20.8	18.5	16.2	13.8	11.5	9.2	6.9	4.6	3.5
30	26.9	24.6	22.4	20.2	17.9	15.7	13.4	11.2	9.0	6.7	4.5	3.4
25	26.1	23.9	21.7	19.6	17.4	15.2	13.0	10.9	8.7	6.5	4.3	3.3
20	25.3	23.2	21.1	19.0	16.9	14.7	12.6	10.5	8.4	6.3	4.2	3.2
15	24.5	22.4	20.4	18.4	16.3	14.3	12.2	10.2	8.2	6.1	4.1	3.1
10	23.7	21.7	19.7	17.8	15.8	13.8	11.8	9.9	7.9	5.9	3.9	3.0

1) SCREEN FABRIC SPAN IS MEASURED BETWEEN SUPPORTS.
2) FOR PRESSURE OR SPANS BETWEEN VALUES SHOWN, DEFLECTION CAN BE INTERPOLATED.

SEE "ANCHOR & FASTENING NOTE 3 ON SHEET 1

ANCHOR	CONC. & FILLED CMU (3500 PSI) *		HOLLOW CMU (1800 PSI)*		WOOD (S.G. = .55)*		BUILD-OUT OR BUILD-IN; MILD CARBON STEEL OR 6063-T6 MIN.	
	MIN. EDGE	MIN. EMB.	MIN. EDGE	MIN. EMB.	MIN. EDGE	MIN. EMB.	MIN. EDGE	MIN. EMB.
5/16" ELCO ULTRACON HFH	3 1/8"	1 3/4"	3 1/8"	1 1/4"	2"	1 9/16"	2"	1 9/16"
1/4" -20 ELCO DRIL-FLEX STRUCTURAL DRILL SCREWS	---	---	---	---	---	---	2"	3 THREADS **

* UNLESS OTHERWISE NOTED IN ANCHOR TABLES. ** 3 THREADS PENETRATION PAST INSIDE SURFACE OF TUBE.

EDGE DISTANCE REDUCTION FACTORS FOR ANCHOR SPACING								
EDGE DISTANCE	10d	9d	8d	7d	6d	5d	4d	3d
REDUCTION FACTOR - HOLLOW CMU	1	0.9	0.8	0.7	0.6	0.5	0.4	0.3
REDUCTION FACTOR - CONCRETE	1	0.9	0.8	0.7	0.59	0.49	0.39	0.29

LIST OF REPORTS

EVALUATION BASED ON:
FENESTRATION TESTING LABORATORY, INC.

ROLL–UP SCREEN CONFIGURATION

LABORATORY No. 5451
DATE: DECEMBER 8, 2007
REPORT No. 02
FILE No. 07–508
TEST PROTOCOL: ASTM E330–02, E1886 & E1996–05
MAXIMUM WIDTH TESTED: 292"
DESIGN PRESSURE TESTED: 60 PSF
STRUCTURAL LOAD TESTED: 120 PSF

SLIDE SCREEN CONFIGURATION

LABORATORY No. 5451
DATE: DECEMBER 8, 2007
REPORT No. 02
FILE No. 07–508
TEST PROTOCOL: ASTM E330–02, E1886 & E1996–05

MINIMUM WIDTH TESTED: 150.5"
DESIGN PRESSURE TESTED: 90 PSF
STRUCTURAL LOAD TESTED: 135 PSF

PROJECT #310-0802

REV	DESCRIPTION	DATE	BY
A	PER EMAILS FROM TDI DATED 06/07/11 & 06/27/11	08/31/11	TJH

STORM SMART INDUSTRIES
6182 IDLEWILD STREET
FORT MYERS, FL 33966

TITLE: WIND ABATEMENT SYSTEM
MATERIAL SPECS, FASTENER SCHEDULE, TEST REPORTS, ETC.

DRAWN BY: RJA
DATE: 3/29/11
SCALE: N.T.S.
DRAWING NO: SSI0001
REV: 2
SHEET: 2 OF 9

PREPARED BY:
PRODUCT DESIGN GROUP, LLC
P.O. Box 520775
Longwood, FL 32752-0775
Texas Cert. of Reg. No. F-13740
Phone: 321.690.1788
Fax: 321.690.1789
Email: info@pdc-corp.com

Robert J. Amoruso, P.E.
Texas P.E. No. 80817

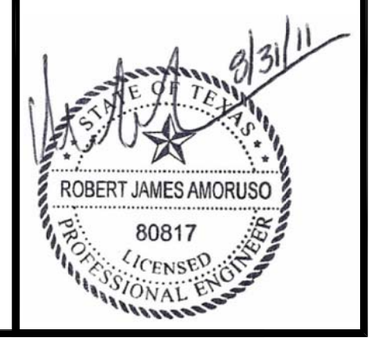

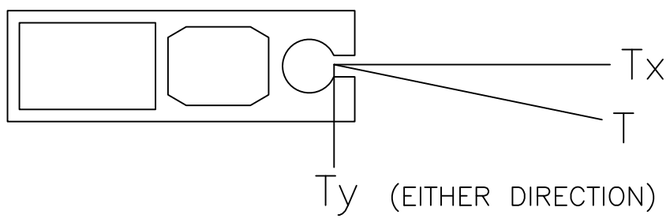

LOADS ON EXISTING STRUCTURE

ROLL-UP & SLIDE SCREEN INSTALLATIONS

NOTE: ROLL–UP & SLIDE SCREEN LOADS APPLIED ALONG ANCHOR LINE. SCREEN TRACK SLIDE RAIL SHOWN ABOVE FOR ILLUSTRATION.

LOADS ON EXISTING STRUCTURE FROM SCREEN SYSTEM
RESULTANT (T) = SRSS(Tx + Ty) (PLF)

SPAN (FT)	PRESSURE (PSF)					
	60	50	40	30	20	10
24	1786	1555	1304	1029	724	384
23	1712	1491	1250	986	694	368
22	1637	1426	1196	943	664	352
21	1563	1361	1141	900	634	336
20	1489	1296	1087	858	604	320
19	1414	1231	1033	815	573	304
18	1340	1167	978	772	543	288
17	1265	1102	924	729	513	272
16	1191	1037	870	686	483	256
15	1116	972	815	643	453	240
14	1042	907	761	600	423	224
13	968	843	707	557	392	208
12	893	778	652	515	362	192
11	819	713	598	472	332	176
10	744	648	543	429	302	160
9	670	583	489	386	272	144
8	595	518	435	343	241	128
7	521	454	380	300	211	112
6	447	389	326	257	181	96
5	372	324	272	214	151	80
4	298	259	217	172	121	64
3	223	194	163	129	91	48

FOR PRESSURES OR SPANS BETWEEN VALUES SHOWN, LOADS ON EXISTING STRUCTURE CAN BE INTERPOLATED.

LOADS ON EXISTING STRUCTURE FROM SCREEN SYSTEM
Tx = PARALLEL LOADS (PLF)

SPAN (FT)	PRESSURE (PSF)					
	60	50	40	30	20	10
24	1635	1435	1213	964	684	365
23	1567	1375	1162	924	655	350
22	1499	1315	1112	884	627	335
21	1430	1256	1061	843	598	319
20	1362	1196	1011	803	570	304
19	1294	1136	960	763	541	289
18	1226	1076	910	723	513	274
17	1158	1016	859	683	484	259
16	1090	957	809	643	456	243
15	1022	897	758	602	427	228
14	954	837	707	562	399	213
13	885	777	657	522	370	198
12	817	718	606	482	342	182
11	749	658	556	442	313	167
10	681	598	505	402	285	152
9	613	538	455	361	256	137
8	545	478	404	321	228	122
7	477	419	354	281	199	106
6	409	359	303	241	171	91
5	341	299	253	201	142	76
4	272	239	202	161	114	61
3	204	179	152	120	85	46

LOADS ON EXISTING STRUCTURE FROM SCREEN SYSTEM
Ty = PERPENDICULAR LOADS (PLF)

SPAN (FT)	PRESSURE (PSF)					
	60	50	40	30	20	10
24	720	600	480	360	240	120
23	690	575	460	345	230	115
22	660	550	440	330	220	110
21	630	525	420	315	210	105
20	600	500	400	300	200	100
19	570	475	380	285	190	95
18	540	450	360	270	180	90
17	510	425	340	255	170	85
16	480	400	320	240	160	80
15	450	375	300	225	150	75
14	420	350	280	210	140	70
13	390	325	260	195	130	65
12	360	300	240	180	120	60
11	330	275	220	165	110	55
10	300	250	200	150	100	50
9	270	225	180	135	90	45
8	240	200	160	120	80	40
7	210	175	140	105	70	35
6	180	150	120	90	60	30
5	150	125	100	75	50	25
4	120	100	80	60	40	20
3	90	75	60	45	30	15

PROJECT #310-0802

REV	DESCRIPTION	DATE	BY
A	PER EMAILS FROM TDI DATED 06/07/11 & 06/27/11	08/31/11	TJH

STORM SMART INDUSTRIES
6182 IDLEWILD STREET
FORT MYERS, FL 33966

TITLE: WIND ABATEMENT SYSTEM LOADS ON EXISTING STRUCTURE

DRAWN BY: RJA
DATE: 3/29/11
SCALE: N.T.S.
DRAWING NO: SSI0001
REV: A
SHEET: 3 OF 9

PREPARED BY:
PRODUCT DESIGN GROUP, LLC
P.O. Box 520775
Longwood, FL 32752-0775
Texas Cert. of Reg. No. F-13740
Phone: 321.690.1788
Fax: 321.690.1789
Email: info@pdc-corp.com

Robert J. Amoruso, P.E.
Texas P.E. No. 80817

8/31/11

STATE OF TEXAS
ROBERT JAMES AMORUSO
80817
LICENSED
PROFESSIONAL ENGINEER

ROLL-UP SCREEN INSTALLATION

ELEVATIONS AND SECTION VIEWS

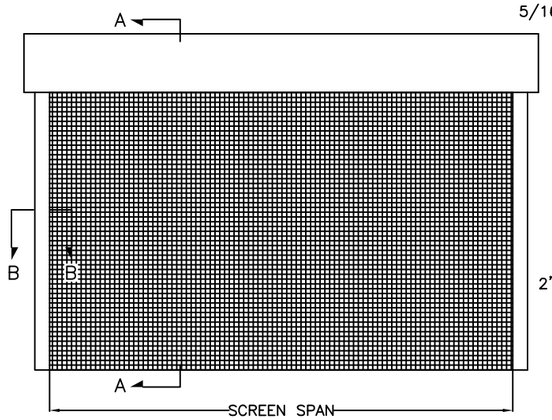

ROLL-UP SCREEN SINGLE UNIT ELEVATION

SINGLE SPAN UP TO 24 FEET - N.T.S.

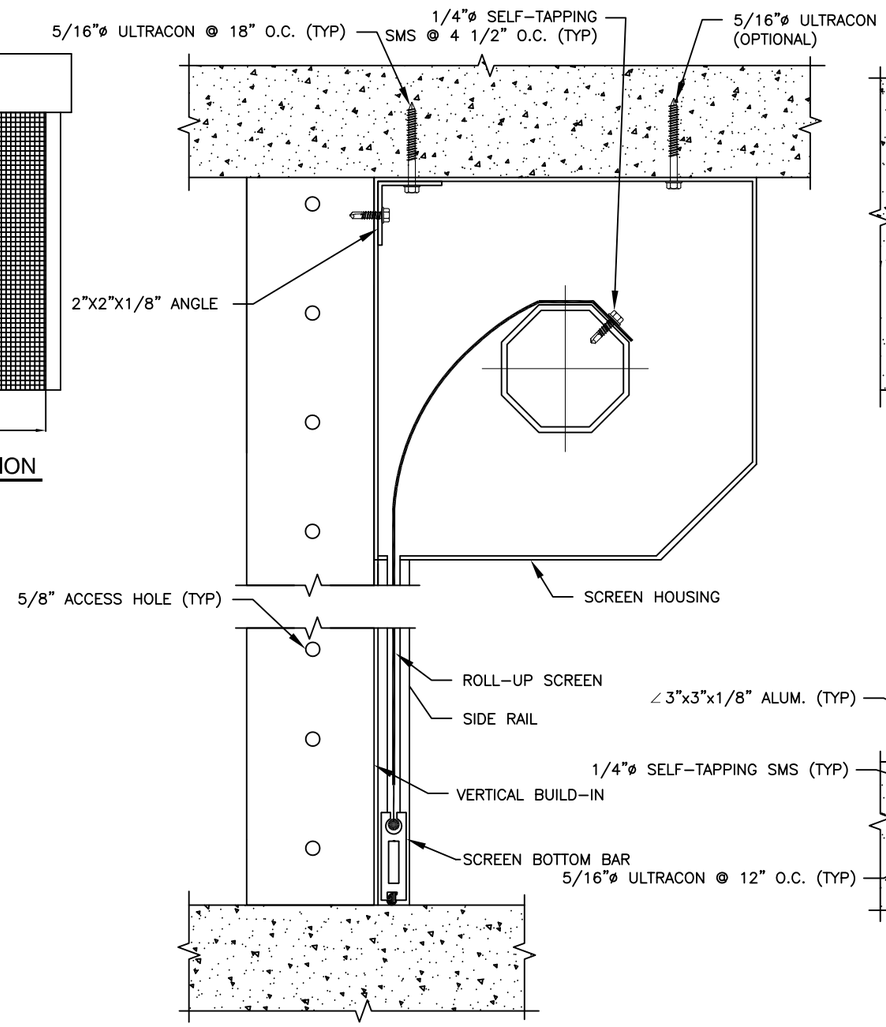

SECTION A-A (BUILD-IN)

ROLL-UP SCREEN BUILD-IN INSTALLATION - N.T.S.

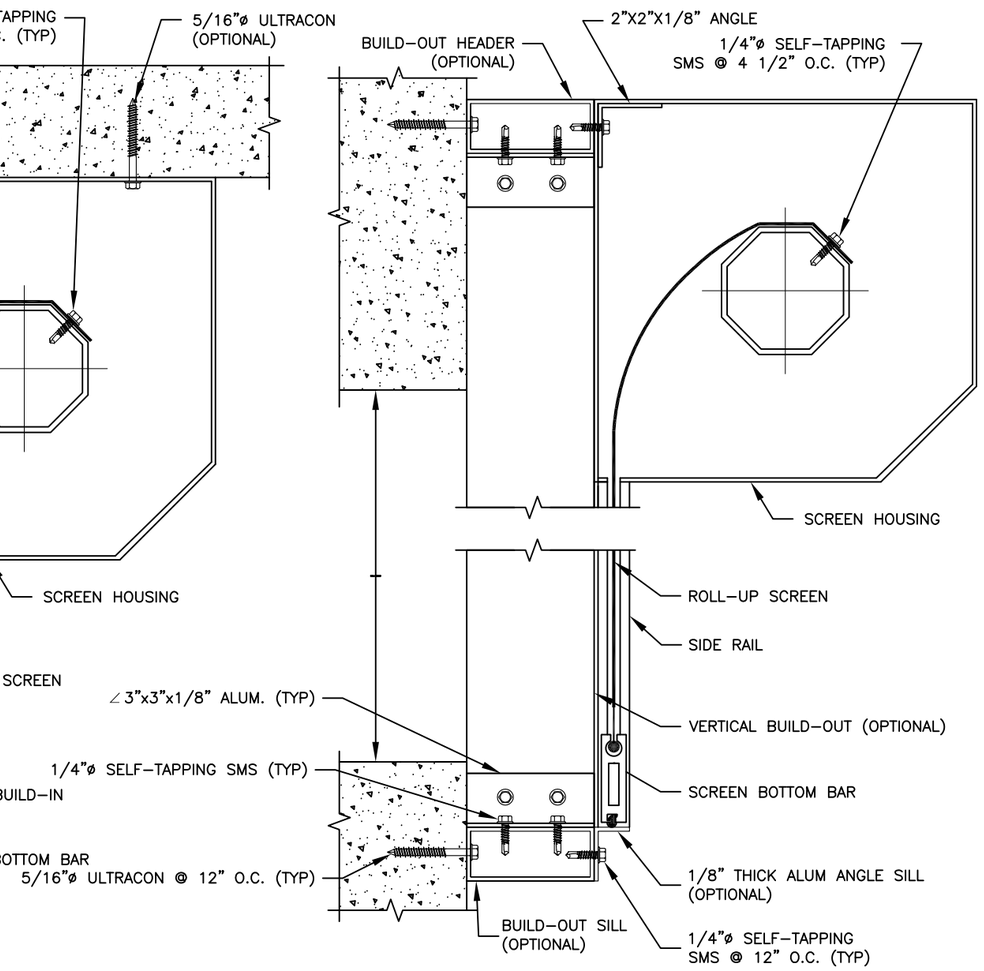

SECTION A-A (BUILD-OUT)

ROLL-UP SCREEN BUILD-OUT INSTALLATION - N.T.S.

PROJECT #310-0802

REV	DESCRIPTION	DATE	BY
A	PER EMAILS FROM TDI DATED 06/07/11 & 06/27/11	08/31/11	TJH

STORM SMART INDUSTRIES
6182 IDLEWILD STREET
FORT MYERS, FL 33966

TITLE: WIND ABATEMENT SYSTEM ROLL-UP SCREEN / ELEVATIONS AND SECTIONS

DRAWN BY: RJA
DATE: 3/29/11
SCALE: N.T.S.
DRAWING NO: SSI0001
REV: A
SHEET: 4 OF 9

PREPARED BY:

PRODUCT DESIGN GROUP, LLC
P.O. Box 520775
Longwood, FL 32752-0775
Texas Cert. of Reg. No. F-13740
Phone: 321.690.1788
Fax: 321.690.1789
Email: info@pdc-corp.com

Robert J. Amoruso, P.E.
Texas P.E. No. 80817

8/31/11

STATE OF TEXAS
ROBERT JAMES AMORUSO
80817
LICENSED
PROFESSIONAL ENGINEER

SLIDE SCREEN INSTALLATION

ELEVATION

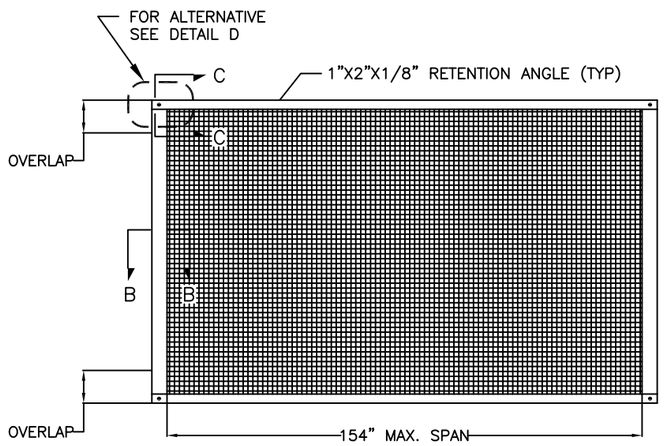

NOTE: THE RETENTION ANGLES ARE NOT REQUIRED WHERE THE SLIDE SCREEN TRACK ENDS ARE AGAINST THE EXISTING STRUCTURE.

SLIDE SCREEN SINGLE UNIT ELEVATION

VERTICAL OR HORIZONTAL INSTALLATION - N.T.S.

ROLL-UP & SLIDE SCREEN INSTALLATION

SECTION VIEWS

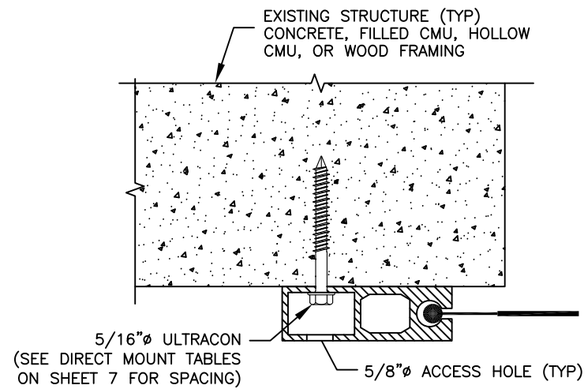

SECTION B-B (OPTION 1)

WALL MOUNT INSTALLATION - N.T.S.

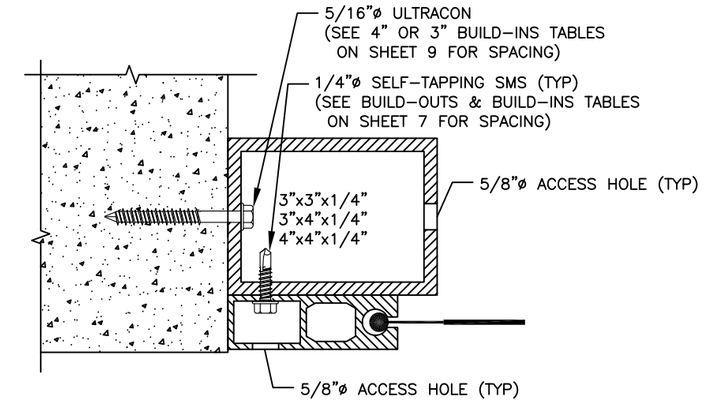

SECTION B-B (OPTION 2)

BUILD-IN INSTALLATION - N.T.S.

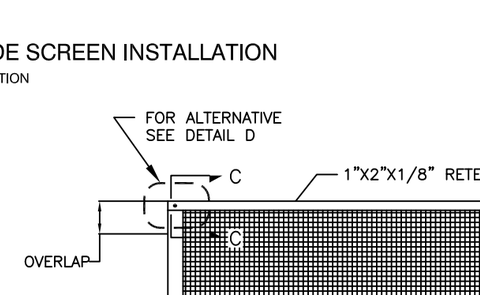

SECTION C-C

RETENTION ANGLE INSTALLATION - N.T.S.

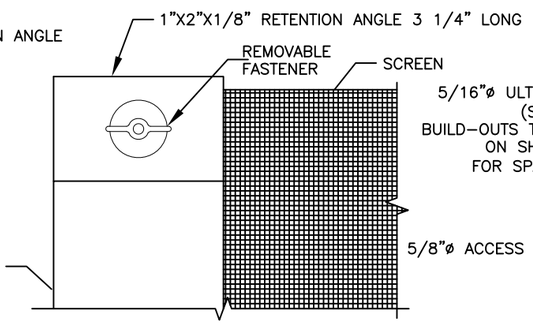

DETAIL D (OPTIONAL)

ALTERNATIVE RETENTION ANGLE INSTALLATION - N.T.S.

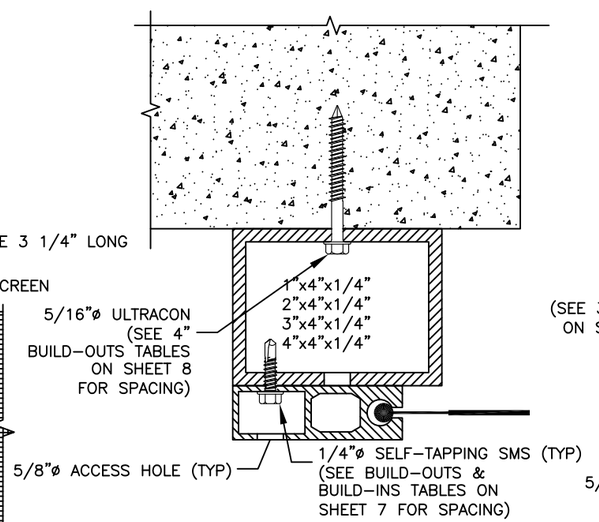

SECTION B-B (OPTION 3A)

4" BUILD-OUT INSTALLATION - N.T.S.

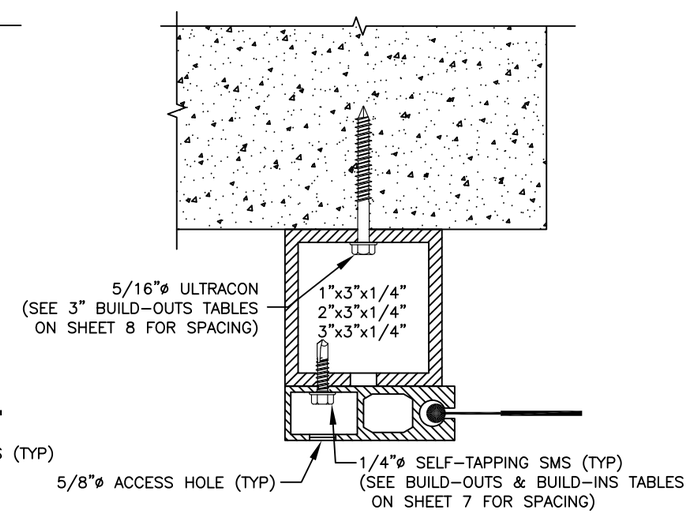

SECTION B-B (OPTION 3B)

3" BUILD-OUT INSTALLATION - N.T.S.

PROJECT #310-0802				
REV	DESCRIPTION	DATE	BY	
A	PER EMAILS FROM TDI DATED 06/07/11 & 06/27/11	08/31/11	TJH	

STORM SMART INDUSTRIES
6182 IDLEWILD STREET
FORT MYERS, FL 33966

TITLE: WIND ABATEMENT SYSTEM
ROLL-UP & SLIDE SCREEN / ELEVATION & SECTIONS

DRAWN BY: RJA
DATE: 3/29/11
SCALE: N.T.S.
DRAWING NO: SSI0001
REV: A
SHEET: 5 OF 9

PREPARED BY:

PRODUCT DESIGN GROUP, LLC
P.O. Box 520775
Longwood, FL 32752-0775
Texas Cert. of Reg. No. F-13740
Phone: 321.690.1788
Fax: 321.690.1789
Email: info@pdc-corp.com

Robert J. Amoruso, P.E.
Texas P.E. No. 80817

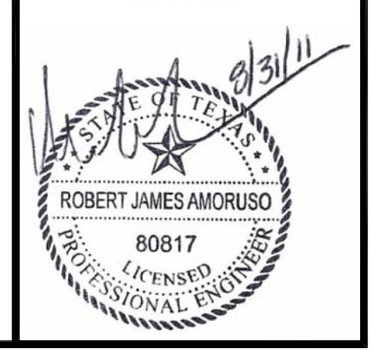

ROLL-UP & SLIDE SCREEN INSTALLATION

SECTION VIEWS

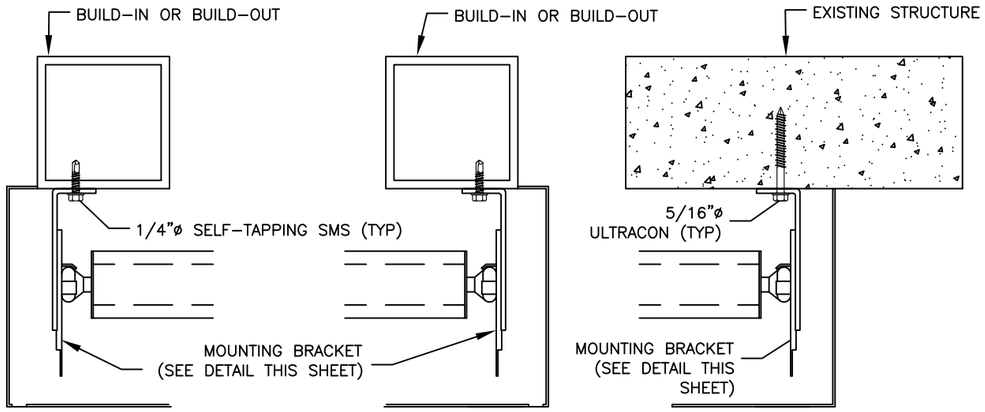

MOUNTING BRACKET INSTALLATION

ROLL-UP SCREEN - N.T.S.

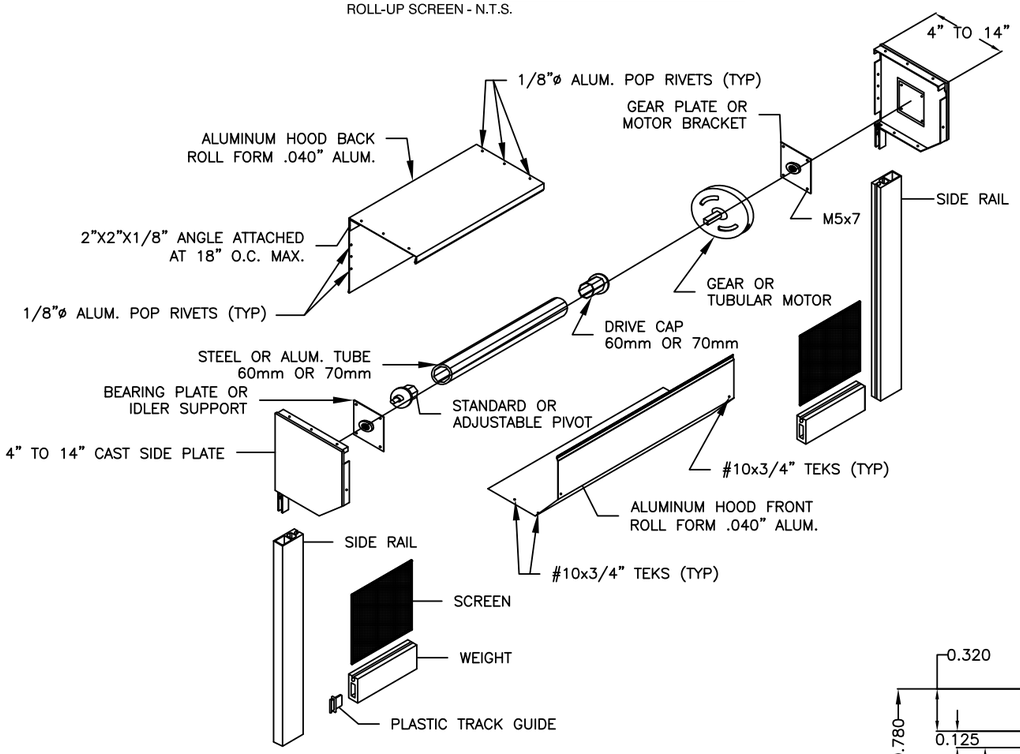

END CAP COMPONENTS AND ASSEMBLY DETAIL

ROLL-UP SCREEN INSTALLATION - N.T.S.

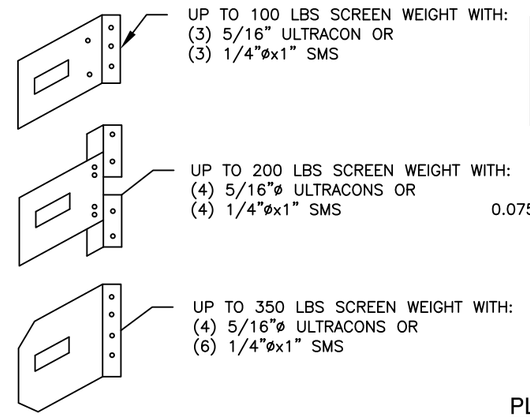

MOUNTING BRACKET

ROLL-UP SCREEN - N.T.S.

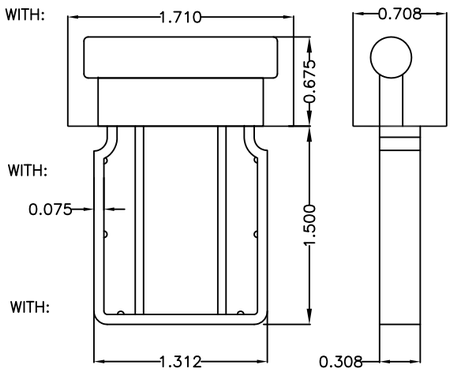

PLASTIC TRACK GUIDE FOR BOTTOM BAR

ROLL-UP SCREEN INSTALLATION - SCALE: 1:1

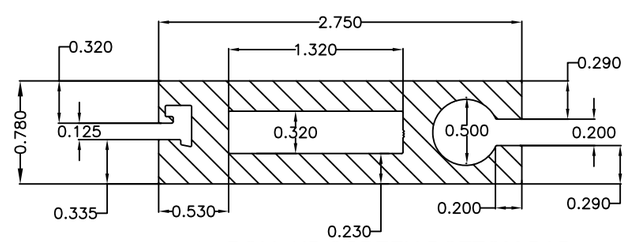

2 3/4" ROLL-UP SCREEN BOTTOM BAR

6063-T6 ALUMINUM - SCALE: 1:1

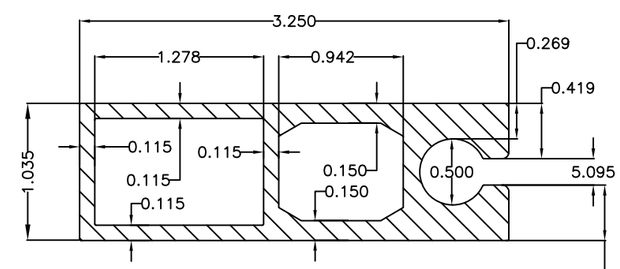

3 1/4" SCREEN TRACK SIDE RAIL

6063-T6 ALUMINUM - SCALE: 1:1

REV	DESCRIPTION	DATE	BY
A	PER EMAILS FROM TDI DATED 06/07/11 & 06/27/11	08/31/11	TJH

PROJECT #310-0802

STORM SMART INDUSTRIES
6182 IDLEWILD STREET
FORT MYERS, FL 33966

TITLE: WIND ABATEMENT SYSTEM ROLL-UP & SLIDE SCREEN / SECTION VIEWS

DRAWN BY: RJA
DATE: 3/29/11
SCALE: N.T.S.
DRAWING NO: SSI0001
REV: A
SHEET: 6 OF 9

PREPARED BY:
PRODUCT DESIGN GROUP, LLC
P.O. Box 520775
Longwood, FL 32752-0775
Texas Cert. of Reg. No. F-13740
Phone: 321.690.1788
Fax: 321.690.1789
Email: info@pdc-corp.com

Robert J. Amoruso, P.E.
Texas P.E. No. 80817

STATE OF TEXAS
ROBERT JAMES AMORUSO
80817
LICENSED
PROFESSIONAL ENGINEER
8/31/11

ROLL-UP AND SLIDE SCREEN INSTALLATION

NOTE: LOADS AND FASTENING SCHEDULES ARE FOR ATTACHING THE SIDE RAILS TO THE EXISTING STRUCTURE AND TO BUILD-OUTS OR BUILD-INS

DIRECT MOUNT

MAXIMUM DESIGN PRESSURE OF A ROLL-UP SCREEN FOR ANY LENGTH ATTACHED WITH 5/16" ELCO ULTRACON HFH @ 4" O.C. FOR CONCRETE/CMU AND TIMBER.

SCREEN SPANS UP TO	PRESSURE (PSF)		
	CONC. & FILLED CMU (3500 PSI)	HOLLOW CMU (1800 PSI)	TIMBER (SG = 0.55)
3'-0"	60	60	60
4'-0"	60	60	60
5'-0"	60	60	60
6'-0"	60	60	60
7'-0"	60	60	60
8'-0"	60	60	60
9'-0"	60	60	60
10'-0"	60	60	60
11'-0"	60	55	60
12'-0"	60	49	60
13'-0"	60	45	60
14'-0"	60	41	60
15'-0"	60	38	60
16'-0"	60	35	56
17'-0"	60	32	52
18'-0"	60	30	49
19'-0"	60	29	45
20'-0"	60	27	43
21'-0"	60	25	40
22'-0"	60	24	38
23'-0"	60	23	36
24'-0"	59	22	34

DIRECT MOUNT

MAXIMUM DESIGN PRESSURE OF A ROLL-UP SCREEN FOR ANY LENGTH ATTACHED WITH 5/16" ELCO ULTRACON HFH @ 6" O.C. FOR CONCRETE/CMU AND TIMBER.

SCREEN SPANS UP TO	PRESSURE (PSF)		
	CONC. & FILLED CMU (3500 PSI)	HOLLOW CMU (1800 PSI)	TIMBER (SG = 0.55)
3'-0"	60	60	60
4'-0"	60	60	60
5'-0"	60	60	60
6'-0"	60	60	60
7'-0"	60	58	60
8'-0"	60	49	60
9'-0"	60	43	60
10'-0"	60	38	60
11'-0"	60	34	54
12'-0"	60	30	49
13'-0"	60	28	44
14'-0"	60	25	40
15'-0"	60	23	37
16'-0"	59	22	34
17'-0"	55	20	32
18'-0"	51	19	30
19'-0"	48	18	28
20'-0"	45	17	26
21'-0"	42	16	25
22'-0"	40	15	23
23'-0"	38	15	22
24'-0"	36	14	21

DIRECT MOUNT

MAXIMUM DESIGN PRESSURE OF A ROLL-UP SCREEN FOR ANY LENGTH ATTACHED WITH 5/16" ELCO ULTRACON HFH @ 12" O.C. FOR CONCRETE/CMU AND TIMBER.

SCREEN SPANS UP TO	PRESSURE (PSF)		
	CONC. & FILLED CMU (3500 PSI)	HOLLOW CMU (1800 PSI)	TIMBER (SG = 0.55)
3'-0"	60	60	60
4'-0"	60	49	60
5'-0"	60	38	60
6'-0"	60	30	49
7'-0"	60	25	40
8'-0"	59	22	34
9'-0"	51	19	30
10'-0"	45	17	26
11'-0"	40	15	23
12'-0"	36	14	21
13'-0"	33	13	19
14'-0"	30	12	18
15'-0"	28	11	16
16'-0"	26	10	15
17'-0"	24	--	14
18'-0"	23	--	13
19'-0"	21	--	13
20'-0"	20	--	12
21'-0"	19	--	11
22'-0"	18	--	11
23'-0"	16	--	10
24'-0"	16	--	10

MOUNTED TO BUILD-OUTS & BUILD-INS

MAXIMUM DESIGN PRESSURE OF A ROLL-UP SCREEN FOR ANY LENGTH ATTACHED WITH 1/4"-20 HWH ELCO DRIL-FLEX.

SCREEN SPANS UP TO	PRESSURE (PSF)	
	@ 6" O.C.	@ 4" O.C.
8'-0"	60	60
9'-0"	60	60
10'-0"	60	60
11'-0"	60	60
12'-0"	60	60
13'-0"	60	60
14'-0"	60	60
15'-0"	60	60
16'-0"	60	60
17'-0"	58	60
18'-0"	54	60
19'-0"	50	60
20'-0"	47	60
21'-0"	44	60
22'-0"	42	60
23'-0"	39	60
24'-0"	37	60

PROJECT #310-0802

REV	DESCRIPTION	DATE	BY
A	PER EMAILS FROM TDI DATED 06/07/11 & 06/27/11	08/31/11	TJH

STORM SMART INDUSTRIES
6182 IDLEWILD STREET
FORT MYERS, FL 33966

TITLE: WIND ABATEMENT SYSTEM
ROLL-UP & SLIDE SCREEN / DIRECT MOUNT DP'S

DATE: 3/29/11
DRAWN BY: RJA
DRAWING NO: SSI0001
SCALE: N.T.S.
SHEET: 7 OF 9
REV: A

PREPARED BY:
PRODUCT DESIGN GROUP, LLC
P.O. Box 520775
Longwood, FL 32752-0775
Texas Cert. of Reg. No. F-13740
Phone: 321.690.1788
Fax: 321.690.1789
Email: info@pdc-corp.com

Robert J. Amoruso, P.E.
Texas P.E. No. 80817

8/31/11

STATE OF TEXAS
ROBERT JAMES AMORUSO
80817
LICENSED
PROFESSIONAL ENGINEER

ROLL-UP AND SLIDE SCREEN INSTALLATION

NOTE: LOADS AND FASTENING SCHEDULES ARE FOR ATTACHING THE BUILD-OUTS OR BUILD-INS TO THE EXISTING STRUCTURE

4" BUILD-OUTS

MAXIMUM DESIGN PRESSURE OF A ROLL-UP SCREEN FOR ANY LENGTH ATTACHED WITH 5/16" ELCO ULTRACON HFH @ 6" O.C. FOR CONCRETE/CMU AND TIMBER.

SCREEN SPANS UP TO	PRESSURE (PSF)		
	CONC. & FILLED CMU (3500 PSI)	HOLLOW CMU (1800 PSI)	TIMBER (SG = 0.55)
3'-0"	60	60	60
4'-0"	60	60	60
5'-0"	60	59	60
6'-0"	60	48	60
7'-0"	60	40	60
8'-0"	60	34	60
9'-0"	60	30	52
10'-0"	60	27	46
11'-0"	60	24	41
12'-0"	57	22	37
13'-0"	52	20	33
14'-0"	48	19	31
15'-0"	44	17	28
16'-0"	41	16	26
17'-0"	38	15	25
18'-0"	36	14	23
19'-0"	34	13	22
20'-0"	32	13	21
21'-0"	30	12	19
22'-0"	29	11	18
23'-0"	27	11	18
24'-0"	26	10	17

4" BUILD-OUTS

MAXIMUM DESIGN PRESSURE OF A ROLL-UP SCREEN FOR ANY LENGTH ATTACHED WITH 5/16" ELCO ULTRACON HFH @ 4" O.C. FOR CONCRETE/CMU AND TIMBER.

SCREEN SPANS UP TO	PRESSURE (PSF)		
	CONC. & FILLED CMU (3500 PSI)	HOLLOW CMU (1800 PSI)	TIMBER (SG = 0.55)
3'-0"	60	60	60
4'-0"	60	60	60
5'-0"	60	60	60
6'-0"	60	60	60
7'-0"	60	60	60
8'-0"	60	55	60
9'-0"	60	48	60
10'-0"	60	42	60
11'-0"	60	38	60
12'-0"	60	34	60
13'-0"	60	32	54
14'-0"	60	29	49
15'-0"	60	27	46
16'-0"	60	25	42
17'-0"	60	23	39
18'-0"	57	22	37
19'-0"	53	21	35
20'-0"	50	20	33
21'-0"	48	19	31
22'-0"	45	18	29
23'-0"	43	17	28
24'-0"	41	16	26

3" BUILD-OUTS

MAXIMUM DESIGN PRESSURE OF A ROLL-UP SCREEN FOR ANY LENGTH ATTACHED WITH 5/16" ELCO ULTRACON HFH @ 6" O.C. FOR CONCRETE/CMU AND TIMBER.

SCREEN SPANS UP TO	PRESSURE (PSF)		
	CONC. & FILLED CMU (3500 PSI)	HOLLOW CMU (1800 PSI)	TIMBER (SG = 0.55)
3'-0"	60	60	60
4'-0"	60	60	60
5'-0"	60	54	60
6'-0"	60	43	60
7'-0"	60	37	60
8'-0"	60	31	55
9'-0"	60	28	48
10'-0"	60	25	42
11'-0"	57	22	38
12'-0"	51	20	34
13'-0"	47	18	31
14'-0"	43	17	29
15'-0"	40	16	26
16'-0"	37	15	25
17'-0"	35	14	23
18'-0"	33	13	22
19'-0"	31	12	20
20'-0"	29	12	19
21'-0"	27	11	18
22'-0"	26	10	17
23'-0"	25	10	16
24'-0"	24	--	16

3" BUILD-OUTS

MAXIMUM DESIGN PRESSURE OF A ROLL-UP SCREEN FOR ANY LENGTH ATTACHED WITH 5/16" ELCO ULTRACON HFH @ 4" O.C. FOR CONCRETE/CMU AND TIMBER.

SCREEN SPANS UP TO	PRESSURE (PSF)		
	CONC. & FILLED CMU (3500 PSI)	HOLLOW CMU (1800 PSI)	TIMBER (SG = 0.55)
3'-0"	60	60	60
4'-0"	60	60	60
5'-0"	60	60	60
6'-0"	60	60	60
7'-0"	60	58	60
8'-0"	60	50	60
9'-0"	60	43	60
10'-0"	60	39	60
11'-0"	60	35	60
12'-0"	60	31	55
13'-0"	60	29	50
14'-0"	60	27	46
15'-0"	60	25	42
16'-0"	59	23	39
17'-0"	55	21	36
18'-0"	51	20	34
19'-0"	48	19	32
20'-0"	46	18	30
21'-0"	43	17	29
22'-0"	41	16	27
23'-0"	39	15	26
24'-0"	37	15	25

PROJECT #310-0802

REV	DESCRIPTION	DATE	BY
A	PER EMAILS FROM TDI DATED 06/07/11 & 06/27/11	08/31/11	TJH

STORM SMART INDUSTRIES
6182 IDLEWILD STREET
FORT MYERS, FL 33966

TITLE: ROLL-UP & SLIDE SCREEN / BUILDOUTS DP'S WIND ABATEMENT SYSTEM

DATE: 3/29/11
DRAWING NO: SSI0001
DRAWN BY: RJA
SCALE: N.T.S.
SHEET: 8 OF 9
REV: A

PREPARED BY:
PRODUCT DESIGN GROUP, LLC
P.O. Box 520775
Longwood, FL 32752-0775
Texas Cert. of Reg. No. F-13740
Phone: 321.690.1788
Fax: 321.690.1789
Email: info@pdc-corp.com

Robert J. Amoruso, P.E.
Texas P.E. No. 80817

8/31/11

STATE OF TEXAS
ROBERT JAMES AMORUSO
80817
LICENSED
PROFESSIONAL ENGINEER

ROLL-UP AND SLIDE SCREEN INSTALLATION

NOTE: LOADS AND FASTENING SCHEDULES ARE FOR ATTACHING THE BUILD-OUTS OR BUILD-INS TO THE EXISTING STRUCTURE

4" BUILD-INS

MAXIMUM DESIGN PRESSURE OF A ROLL-UP SCREEN FOR ANY LENGTH ATTACHED WITH 5/16" ELCO ULTRACON HFH @ 6" O.C. FOR CONCRETE/CMU AND TIMBER.

SCREEN SPANS UP TO	PRESSURE (PSF)		
	CONC. & FILLED CMU (3500 PSI)	HOLLOW CMU (1800 PSI)	TIMBER (SG = 0.55)
3'-0"	60	60	60
4'-0"	60	60	60
5'-0"	60	60	60
6'-0"	60	60	60
7'-0"	60	51	60
8'-0"	60	44	60
9'-0"	60	38	60
10'-0"	60	33	60
11'-0"	60	30	60
12'-0"	60	27	54
13'-0"	60	24	49
14'-0"	60	22	45
15'-0"	57	21	41
16'-0"	52	19	38
17'-0"	48	18	35
18'-0"	45	17	33
19'-0"	42	16	31
20'-0"	40	15	29
21'-0"	37	14	28
22'-0"	35	13	26
23'-0"	33	13	25
24'-0"	32	12	24

4" BUILD-INS

MAXIMUM DESIGN PRESSURE OF A ROLL-UP SCREEN FOR ANY LENGTH ATTACHED WITH 5/16" ELCO ULTRACON HFH @ 4" O.C. FOR CONCRETE/CMU AND TIMBER.

SCREEN SPANS UP TO	PRESSURE (PSF)		
	CONC. & FILLED CMU (3500 PSI)	HOLLOW CMU (1800 PSI)	TIMBER (SG = 0.55)
3'-0"	60	60	60
4'-0"	60	60	60
5'-0"	60	60	60
6'-0"	60	60	60
7'-0"	60	60	60
8'-0"	60	60	60
9'-0"	60	60	60
10'-0"	60	55	60
11'-0"	60	49	60
12'-0"	60	44	60
13'-0"	60	39	60
14'-0"	60	36	60
15'-0"	60	33	60
16'-0"	60	31	60
17'-0"	60	29	58
18'-0"	60	27	54
19'-0"	60	25	50
20'-0"	60	24	47
21'-0"	60	22	45
22'-0"	58	21	42
23'-0"	55	20	40
24'-0"	52	19	38

3" BUILD-INS

MAXIMUM DESIGN PRESSURE OF A ROLL-UP SCREEN FOR ANY LENGTH ATTACHED WITH 5/16" ELCO ULTRACON HFH @ 6" O.C. FOR CONCRETE/CMU AND TIMBER.

SCREEN SPANS UP TO	PRESSURE (PSF)		
	CONC. & FILLED CMU (3500 PSI)	HOLLOW CMU (1800 PSI)	TIMBER (SG = 0.55)
3'-0"	60	60	60
4'-0"	60	60	60
5'-0"	60	60	60
6'-0"	60	60	60
7'-0"	60	60	60
8'-0"	60	56	60
9'-0"	60	49	60
10'-0"	60	43	60
11'-0"	60	38	60
12'-0"	60	34	60
13'-0"	60	31	60
14'-0"	60	29	56
15'-0"	60	27	51
16'-0"	60	25	47
17'-0"	60	23	44
18'-0"	59	22	41
19'-0"	55	20	39
20'-0"	51	19	36
21'-0"	48	18	34
22'-0"	46	17	33
23'-0"	43	16	31
24'-0"	41	16	29

3" BUILD-INS

MAXIMUM DESIGN PRESSURE OF A ROLL-UP SCREEN FOR ANY LENGTH ATTACHED WITH 5/16" ELCO ULTRACON HFH @ 4" O.C. FOR CONCRETE/CMU AND TIMBER.

SCREEN SPANS UP TO	PRESSURE (PSF)		
	CONC. & FILLED CMU (3500 PSI)	HOLLOW CMU (1800 PSI)	TIMBER (SG = 0.55)
3'-0"	60	60	60
4'-0"	60	60	60
5'-0"	60	60	60
6'-0"	60	60	60
7'-0"	60	60	60
8'-0"	60	60	60
9'-0"	60	60	60
10'-0"	60	60	60
11'-0"	60	60	60
12'-0"	60	56	60
13'-0"	60	51	60
14'-0"	60	47	60
15'-0"	60	43	60
16'-0"	60	40	60
17'-0"	60	37	60
18'-0"	60	34	60
19'-0"	60	32	60
20'-0"	60	30	59
21'-0"	60	29	56
22'-0"	60	27	52
23'-0"	60	26	50
24'-0"	60	25	47

PROJECT #310-0802

REV	DESCRIPTION	DATE	BY
A	PER EMAILS FROM TDI DATED 06/07/11 & 06/27/11	08/31/11	TJH

STORM SMART INDUSTRIES
6182 IDLEWILD STREET
FORT MYERS, FL 33966

TITLE: WIND ABATEMENT SYSTEM
ROLL-UP & SLIDE SCREEN / BUILDINS DP'S

DRAWN BY: RJA
DATE: 3/29/11
SCALE: N.T.S.
DRAWING NO: SSI0001
REV: A
SHEET: 9 OF 9

PREPARED BY:

PRODUCT DESIGN GROUP, LLC
P.O. Box 520775
Longwood, FL 32752-0775
Texas Cert. of Reg. No. F-13740
Phone: 321.690.1788
Fax: 321.690.1789
Email: info@pdc-corp.com

Robert J. Amoruso, P.E.
Texas P.E. No. 80817

8/31/11

STATE OF TEXAS
ROBERT JAMES AMORUSO
80817
LICENSED
PROFESSIONAL ENGINEER