TYPICAL SINGLE UNIT
ELEVATION
(NO STORM BARS REQUIRED)

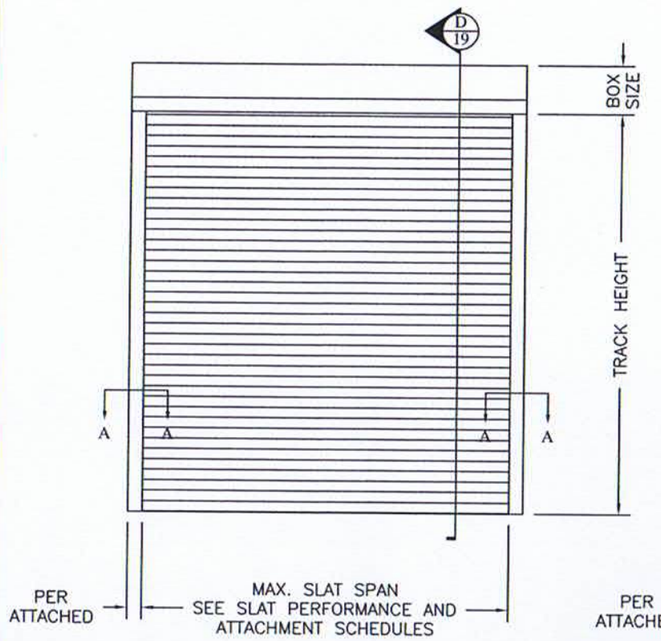

TYPICAL MULTIPLE UNIT
ELEVATION
(NO STORM BARS REQUIRED)
(UNITS SHARE CENTER POST)

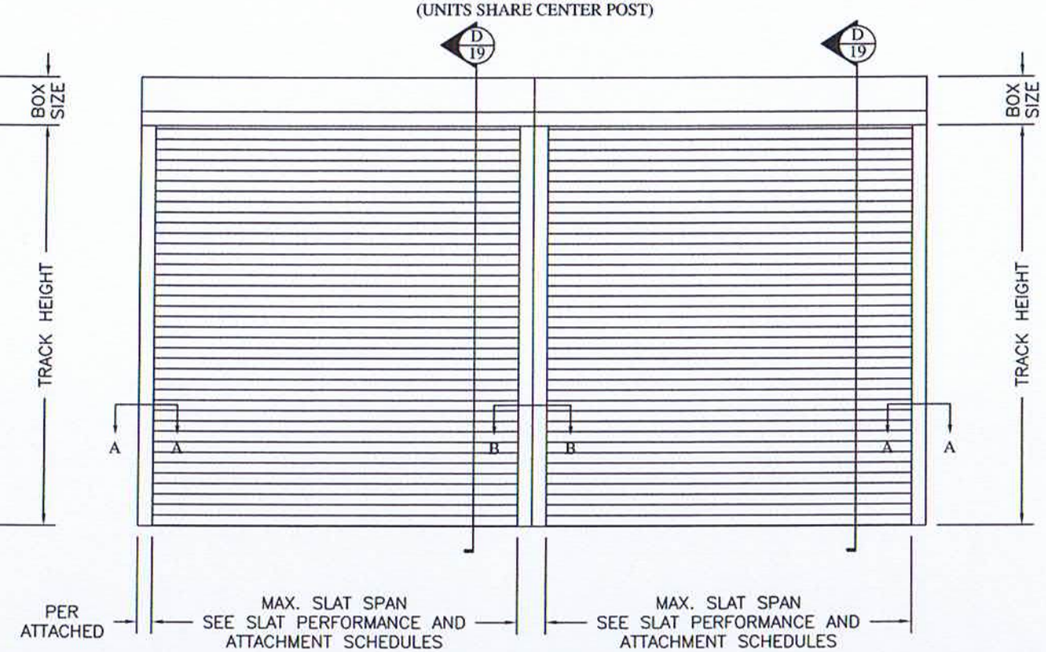

Roll·a·way™ THE ORIGINAL BY QMI

Roll·a·way By QMI
1661 GLENLAKE AVENUE
ITASCA, IL 60143

COPYRIGHT © 2008 QMI

SEE GENERAL
NOTES PAGE 2

TYPICAL SINGLE UNIT
ELEVATION
(STORM BARS REQUIRED)

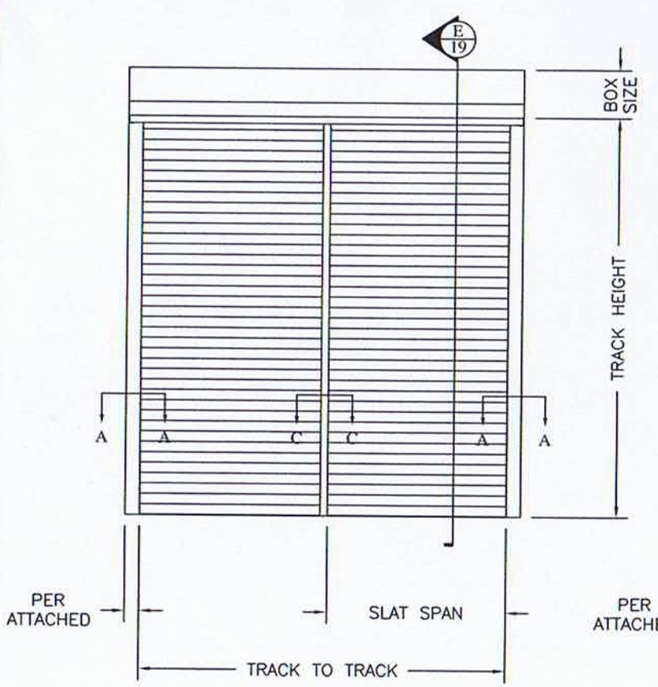

TYPICAL MULTIPLE UNIT
ELEVATION
(STORM BARS REQUIRED)
(UNITS SHARE CENTER POST)

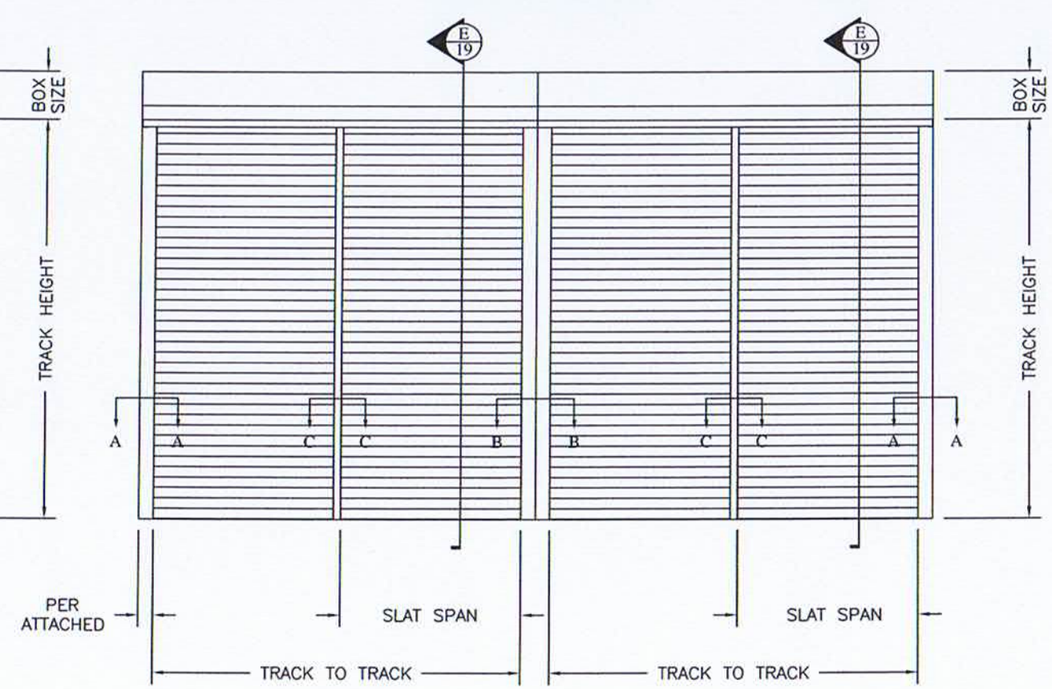

MAX. SLAT SPAN
SEE SLAT PERFORMANCE AND
ATTACHMENT SCHEDULES

DRAWING TITLE:

NOTICE OF ACCEPTANCE
END RETENTION -TDI
PRODUCT APPROVAL

Donald L. Fowler
Professional Engineer
Texas License No.
102913

DRAWN:	DLF
DATE:	4-01-04
APPROVED:	DLF
DATE:	1-31-06
DRAWING NO:	3-01-035
SIZE: B	REV: B
SCALE:	3/8" = 1'-0"
SHEET:	1 OF 26

GENERAL NOTES:

1. THIS NOTICE OF ACCEPTANCE DRAWING FOR END RETENTION ROLL SHUTTER PRODUCTS IS DESIGNED IN ACCORDANCE WITH THE INTERNATIONAL BUILDING CODE (IBC) 2006 AND THE 2006 TEXAS REVISIONS. PRODUCT TESTING RECORDS AND REPORTS PER ATL 0126.01.00, HTL 0006-0106-03, ATL 0316.01-05, HTL 0006-0224-03, AT 91850.01-401-44-RO, CTLA 2017W, AND CTLA 2017W-1.
2. ALL ALUMINUM EXTRUSIONS SHALL BE SPECIFIED HERE-IN. ANY SUBSTITUTIONS SHALL BE APPROVED BY A TEXAS LICENSED PROFESSIONAL ENGINEER.
3. ALL SCREWS TO BE STAINLESS STEEL 304 OR 316 SERIES WITH MINIMUM 50 KSI YIELD POINT AND MINIMUM 85 KSI TENSILE STRENGTH, ALUMINUM, OR COATED STEEL. (SS SMS = STAINLESS STEEL SHEET METAL SCREW)
4. STORM BARS SHALL REMAIN IN PLACE DURING ALL WIND EVENTS. SHUTTERS SHALL BE ROLLED UP IF REMOVABLE STORM BARS ARE NOT REPLACED BEFORE WIND EVENTS.
5. ANCHORS TO WALL SHALL BE AS FOLLOWS (UNLESS OTHERWISE NOTED):
   (A) TO EXISTING 4000 PSI MIN. CONCRETE, OR AS SPECIFIED HEREIN:
      -Ø1/4" TAPCON ANCHORS, AS MANUFACTURED BY ELCO INDUSTRIES
      -#14 CRETEFLEX SS4 ANCHORS, AS MANUFACTURED BY ELCO INDUSTRIES
      -Ø3/8" POWER BOLTS, AS MANUFACTURED BY POWERS FASTENING, INC (3/8" POWER WEDGE BOLT MAYBE SUBSTITUTED) .
      NOTES:
      A.1) MINIMUM EMBEDMENT OF TAPCON ANCHORS AND CRETE FLEX ANCHORS ANCHORS INTO CONCRETE SHALL BE 1 3/4".
      A.2) MINIMUM EMBEDMENT OF POWER BOLT ANCHORS SHALL BE 2".
      A.3) IN CASE THAT PRECAST STONE, PRECAST CONCRETE PANELS ARE FOUND ON THE EXISTING WALL, ANCHORS SHALL BE LONG ENOUGH TO REACH THE MAIN STRUCTURE BEHIND SUCH PANELS.
      A.4) ANCHORAGE EMBEDMENT SHALL BE PER THE MANUFACTURERS LISTED MINIMUMS OR AS SPECIFIED HERE IN.
   (B) TO EXISTING CONCRETE BLOCK WALL:
      -Ø1/4" TAPCON ANCHORS, AS MANUFACTURED BY ELCO INDUSTRIES
      -#14 CRETEFLEX SS4 ANCHORS, AS MANUFACTURED BY ELCO INDUSTRIES
      NOTES:
      B.1) MINIMUM EMBEDMENT OF TAPCON ANCHORS INTO THE CONCRETE BLOCK UNIT SHALL BE 1 1/4".
      B.2) MINIMUM EMBEDMENT OF CRETEFLEX ANCHORS INTO THE CONCRETE BLOCK UNIT SHALL BE 1 1/4".
      B.3) IN CASE THAT PRECAST STONE, PRECAST CONCRETE PANELS, ARE FOUND ON THE EXISTING WALL, ANCHORS SHALL BE LONG ENOUGH TO REACH THE MAIN STRUCTURE BEHIND SUCH PANELS. ANCHORAGE SHALL BE 1 1/4" MINIMUM.
   (C) ANCHORS SHALL BE INSTALLED FOLLOWING ALL OF THE RECOMMENDATIONS AND SPECIFICATIONS OF THE ANCHOR'S MANUFACTURER.
   (D) ANCHORAGE TO WOOD FRAME BUILDINGS IS SPECIFIED IN THIS DRAWING.
   (E) ANCHOR MINIMUM EMBEDMENT DOES NOT INCLUDE EXTERIOR FINISH.
   (F) ANCHORAGE SHALL BE INSTALLED INTO THE BUILDING'S MAIN WIND-FORCE RESISTANT STRUCTURAL COMPONENTS TO ENSURE A LOAD PATH INTO THE BUILDING'S FOUNDATION.
6. IT SHALL BE THE RESPONSIBILITY OF THE INSTALLATION CONTRACTOR TO VERIFY THE SOUNDNESS OF THE STRUCTURE WHERE SHUTTER IS TO BE STRUCTURALLY ATTACHED TO ENSURE PROPER ANCHORAGE.
7. THIS APPROVAL DOES NOT INCLUDE NOR COVER ANY SHUTTER ROLL-UP MECHANISMS, ANY ELECTRICAL INSTALLATIONS, OR MODIFICATIONS NECESSARY TO FACILITATE THEM.
8. TRACK MOUNTING CONDITIONS ARE DEPICTED ON SHEET 10,11, & 12, SECTION "A-A"(WALL MOUNT, JAMB MOUNT, BUILD OUT MOUNT AND MULLION MOUNT). SHARED MIDDLE MULLION TRACK MOUNTING CONDITIONS ARE FOUND ON SHEET 13, 14, & 15 PER SECTION "B-B". ANY OTHER TRACK MOUNTING CONDITIONS SHALL BE ENGINEERED ON A CASE BY CASE BASIS. END CONDITIONS MAY BE MIXED/COMBINED.
9. LINEAR INTERPOLATION IS ALLOWED FOR ALL GRAPHS, CHARTS AND SCHEDULES.
10. ALTERATIONS OR ADDITIONS TO THE DOCUMENT ARE NOT PERMITTED. DOCUMENT SHALL BEAR THE ORIGINAL SEAL, SIGNATURE, AND DATE OF THE PROFESSIONAL ENGINEER LISTED.
11. THIS PRODUCT APPROVAL IS SUITABLE FOR USE ONLY AS SPECIFICALLY STATED ON THE COMBINED PAGES OF THE ENTIRE DOCUMENT. ANY DEVIATIONS SHALL BE REVIEWED AND APPROVED SEPARATELY.

DETAIL LETTER → A
DETAIL SHEET → 3

SECTION LETTER → A
SECTION SHEET → 3

Roll-a-way By QMI
1661 GLENLAKE AVENUE
ITASCA, IL 60143
COPYRIGHT © 2008 QMI

DRAWING TITLE:
NOTICE OF ACCEPTANCE
END RETENTION - TDI
PRODUCT APPROVAL

Donald L. Fowler
Professional Engineer
Texas License No.
102913

DRAWN:	DLF
DATE:	4-05-04
APPROVED:	DLF
DATE:	1-31-06
DRAWING NO:	3-01-035
SIZE: B	REV: B
SCALE:	NONE
SHEET:	2 OF 26

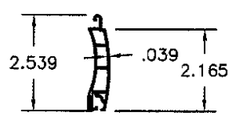

A1 P55 SLAT *
POLYVINYL CHLORIDE

* MUST HAVE REBAR INSERTS PER PAGE 5

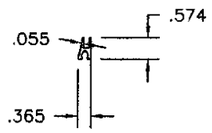

B1 LOWER SLAT REBAR
ALUMINUM 6005-T5

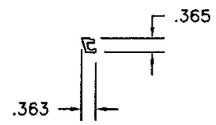

B2 UPPER SLAT REBAR
ALUMINUM 6063-T6

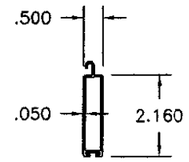

C BOTTOM SLAT
ALUMINUM 6063-T6

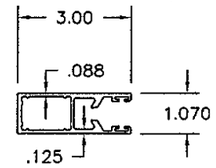

D SYSTEM I TRACK
END RETENTION
ALUMINUM 6063-T6

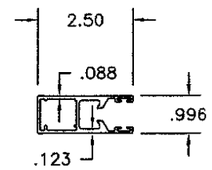

E SYSTEM II TRACK
END RETENTION
ALUMINUM 6063-T6

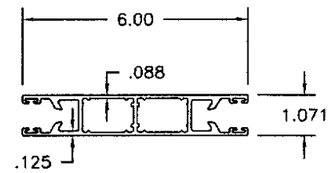

F SYSTEM I DOUBLE TRACK
END RETENTION
ALUMINUM 6063-T6

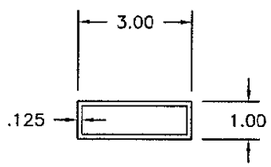

G TUBE 1" x 3" x .125"
ALUMINUM 6063-T6

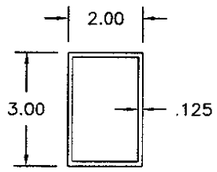

H TUBE 2" x 3" x 1/8"
ALUMINUM 6005-T5

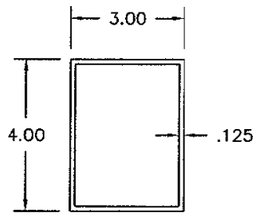

I TUBE 3" x 4" x 1/8"
ALUMINUM 6063-T6

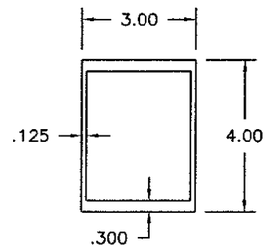

J MULLION 3" x 4" HEAVY DUTY
ALUMINUM 6005-T5

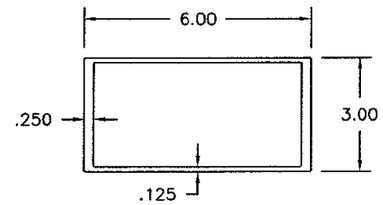

K MULLION 3" x 6" HEAVY DUTY
ALUMINUM 6005-T5

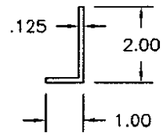

L ANGLE 1" x 2" x .125"
ALUMINUM 6063-T5

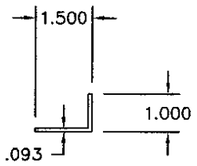

M ANGLE 1" x 1 1/2" x 3/32"
ALUMINUM 6063-T5

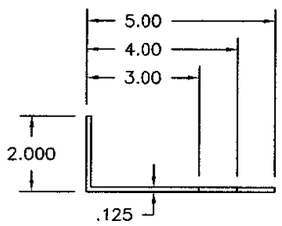

N ANGLE
2" x 3", 4" OR 5" x 1/8"
ALUMINUM 6063-T5

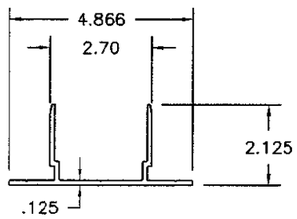

O MULLION BASE 3" x 4" (L=3 3/8")
MULLION BASE 3" x 6" (L=5 7/16")
ALUMINUM 6005-T5

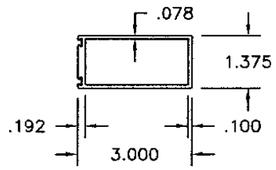

P 3" STORM BAR
ALUMINUM 6005-T5

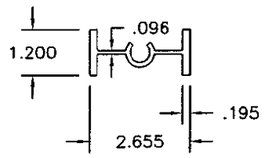

Q 3" STORM BAR INSERT
ALUMINUM 6005-T5

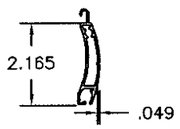

A2 US60 SLAT
ALUMINUM 6063-T6

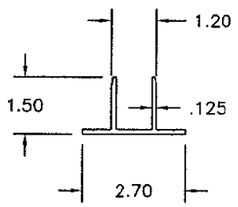

R 3" FIXED STORM BAR BASE,
STANDARD
(LENGTH = 2 5/8")
ALUMINUM 6063-T6

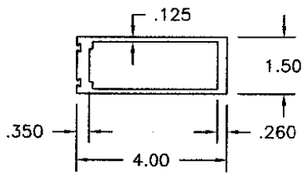

S 4" STORM BAR
ALUMINUM 6005-T5

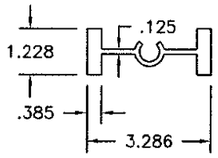

T 4" STORM BAR INSERT
ALUMINUM 6063-T6

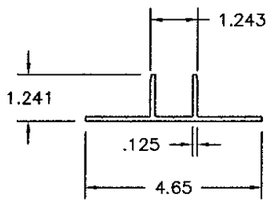

U 4" FIXED STORM BAR BASE,
STANDARD
(LENGTH = 3 9/32")
ALUMINUM 6005-T5

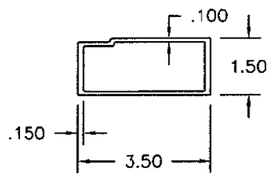

V 3 1/2" HEADER
ALLOY 6005-T5

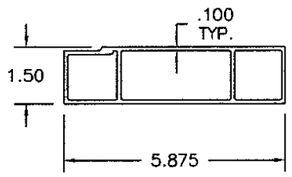

W HEADER 5 7/8"
ALUMINUM 6005-T5

Roll-a-way By QMI
1661 GLENLAKE AVENUE
ITASCA, IL 60143
COPYRIGHT © 2008 QMI

DRAWING TITLE:
NOTICE OF ACCEPTANCE
END RETENTION - TDI
PRODUCT APPROVAL

Donald L. Fowler
Professional Engineer
Texas Licence No.
102013

DRAWN:	DLF
DATE:	4-05-04
APPROVED:	DLF
DATE:	1-31-06
DRAWING NO:	3-01-035
SIZE: B	REV: B
SCALE:	1 : 4
SHEET:	3 OF 26

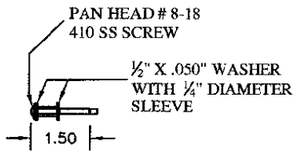

AE RETAIN SCREW ASSEBLY

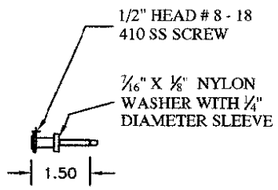

AE ALTERNATE RETAIN SCREW ASSEBLY

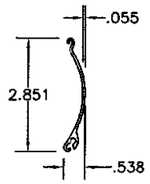

A1 AL7-E SINGLE WALL SLAT
QMI- 395
ALUMINUM 6063-T6

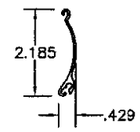

A2 AL7-E SINGLE WALL STARTER SLAT
QMI- 477
ALUMINUM 6063-T6

2 PC. RAIL ASSEMBLY SCREW
#8-18 x 3/4 PHILLIPS PAN SDS 410 S.S.

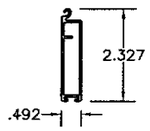

C BASE SLAT
QMI- 408
ALUMINUM 6005-T5

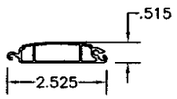

B2 LOCK SLAT
QMI- 409
ALUMINUM 6063-T6

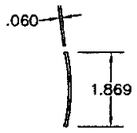

B3 LOCK SLAT COVER
QMI-331
ALUMINUM 6005-T5

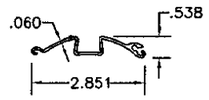

B4 FINGER PULL SLAT
QMI- 410
ALUMINUM 6063-T6

B5 RAIL SNAP COVER
QMI-351
ALUMINUM 6063-T5

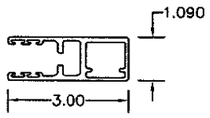

D RETAIN RAIL
QMI- 491
ALUMINUM 6005-T5

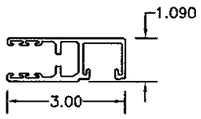

D SNAP COVER RETAIN RAIL
QMI- 492
ALUMINUM 6005-T5

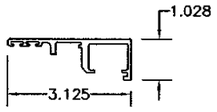

D1 2 PIECE INNER HALF
RETAIN RAIL
QMI- 493
ALUMINUM 6005-T5

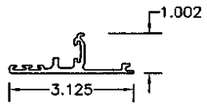

D2 2 PC. OUTER HALF
RETAIN RAIL
QMI- 494
ALUMINUM 6005-T5

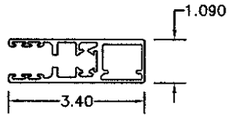

E SPRING STOP RETAIN RAIL
QMI- 479
ALUMINUM 6005-T5

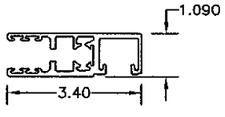

E SPRING STOP SNAP COVER
RETAIN RAIL
QMI- 487
ALUMINUM 6005-T5

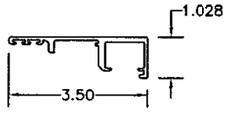

E1 2 PC. INNER HALF
SPRING STOP RETAIN RAIL
QMI- 488
ALUMINUM 6005-T5

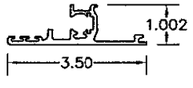

E2 2 PC. OUTER HALF
SPRING STOP RETAIN RAIL
QMI- 489
ALUMINUM 6005-T5

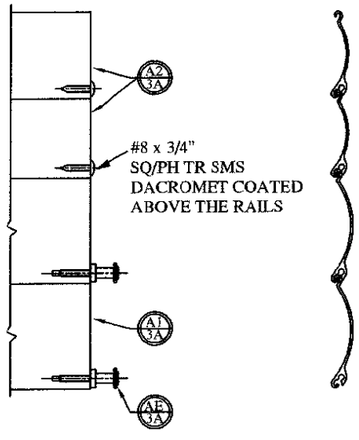

Roll-a-way
By QMI
1661 GLENLAKE AVENUE
ITASCA, IL 60143
COPYRIGHT © 2008
QUALITAS MANUFACTURING INC.

DRAWING TITLE:

NOTICE OF ACCEPTANCE END RETENTION -TDI PRODUCT APPROVAL

D.L. Fowler
Professional Engineer
Texas License No.
PE 102913

DRAWN:	DLF
DATE:	11-02-09
APPROVED:	DLF
DATE:	11-02-09
DRAWING NO:	3-01-035
SIZE: B	REV:
SCALE:	1 : 4
SHEET:	3A OF 26

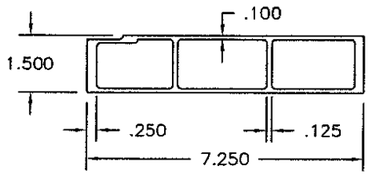

X HEADER 7 1/4"
ALUMINUM 6005-T5

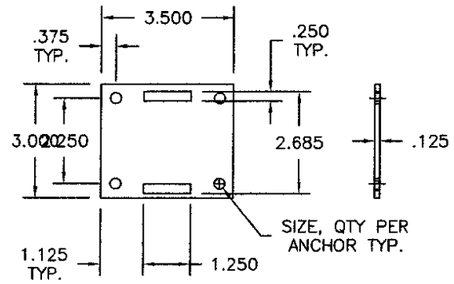

Y 3" REMOVABLE STORM BAR BASE,
STANDARD
ALUMINUM 6061-T6 OR 6005-T5

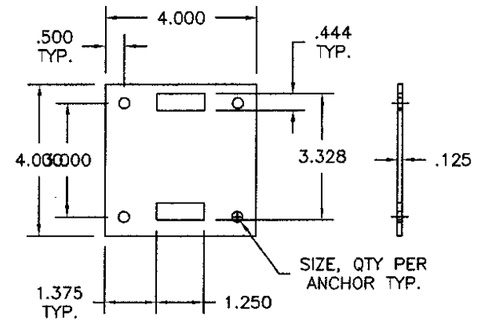

Z 4" REMOVABLE STORM BAR BASE,
STANDARD
ALUMINUM 6061-T6 OR 6005-T5

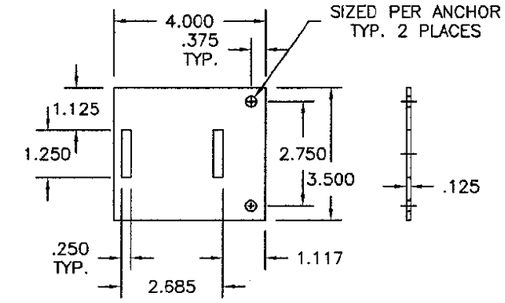

AA 3" REMOVABLE STORM BAR BASE,
EXTENDED
ALUMINUM 6061-T6 OR 6005-T5

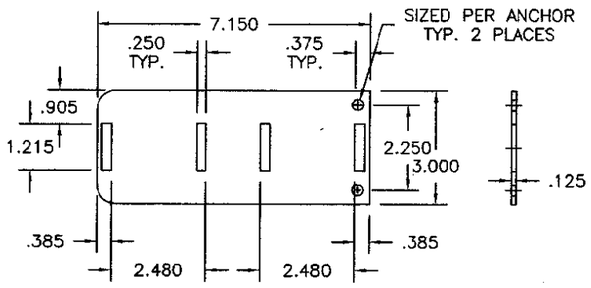

AB 3" REMOVABLE STORM BAR BASE,
EXTENDED
ALUMINUM 6061-T6 OR 6005-T5

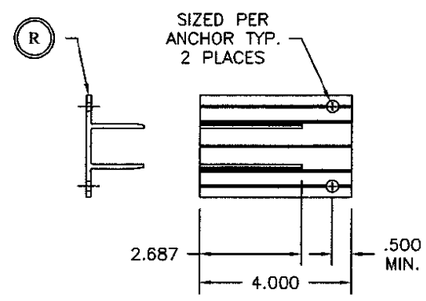

AC 3" FIXED STORM BAR BASE,
EXTENDED
ALUMINUM 6061-T6 OR 6005-T5

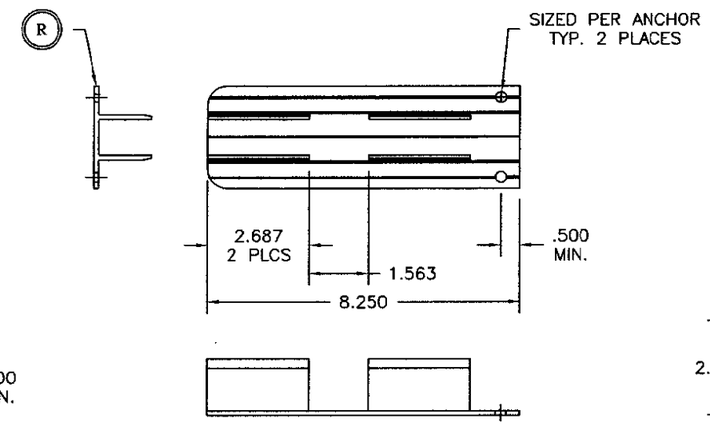

AD 3" FIXED STORM BAR BASE,
DOUBLE
ALUMINUM 6061-T6 OR 6005-T5

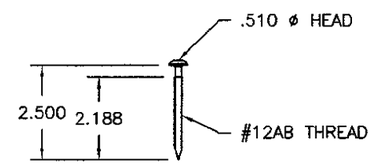

AE END RETENTION SCREW
302 HQ STAINLESS STEEL

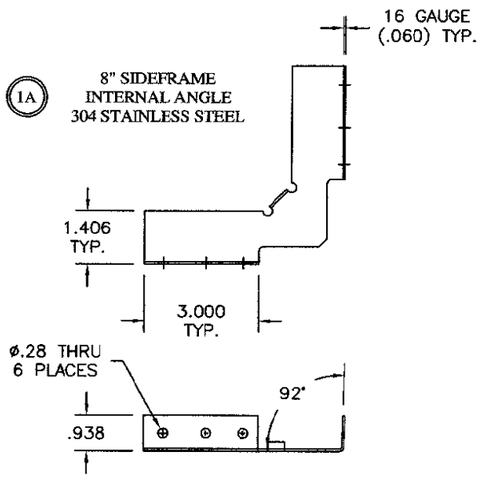

1A 8" SIDEFRAME
INTERNAL ANGLE
304 STAINLESS STEEL

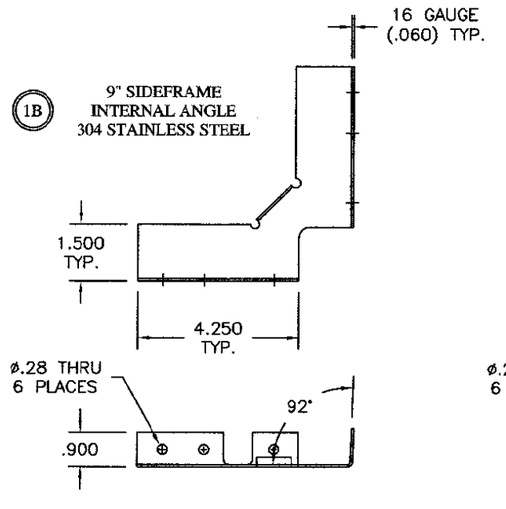

1B 9" SIDEFRAME
INTERNAL ANGLE
304 STAINLESS STEEL

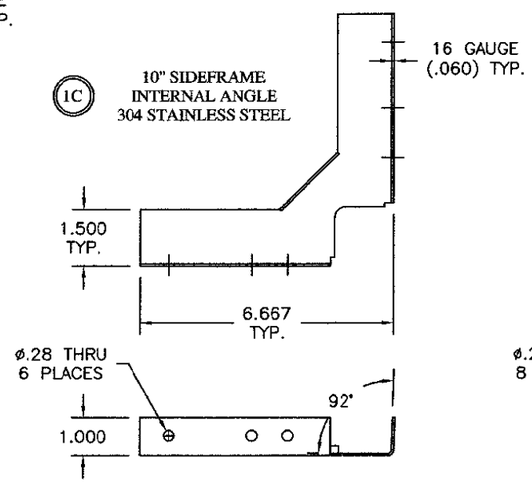

1C 10" SIDEFRAME
INTERNAL ANGLE
304 STAINLESS STEEL

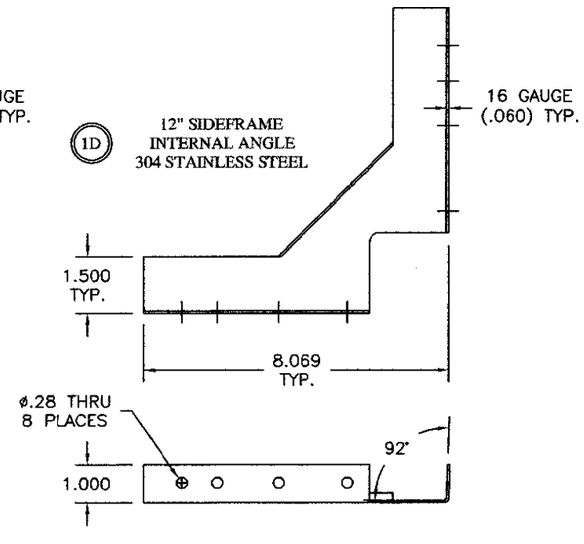

1D 12" SIDEFRAME
INTERNAL ANGLE
304 STAINLESS STEEL

Roll-a-way
By QMI
1661 GLENLAKE AVENUE
ITASCA, IL 60143
COPYRIGHT © 2008 QMI

DRAWING TITLE:
NOTICE OF ACCEPTANCE
END RETENTION - TDI
PRODUCT APPROVAL

Donald L. Fowler
Professional Engineer
Texas Licence No.
102913

DRAWN:	DLF
DATE:	4-05-04
APPROVED:	DLF
DATE:	01-31-06
DRAWING NO:	3-01-035
SIZE: B	REV: B
SCALE:	1 : 4
SHEET:	4 OF 26

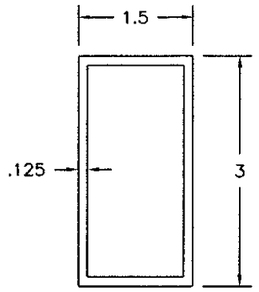

G2 1 1/2" x 3" POST
6063-T5 ALLOY

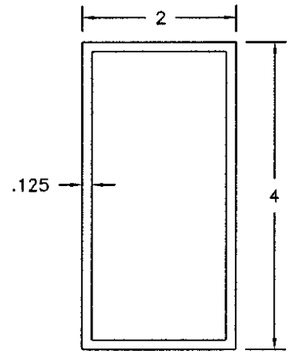

G1 2" x 4" POST
6063-T5 ALLOY

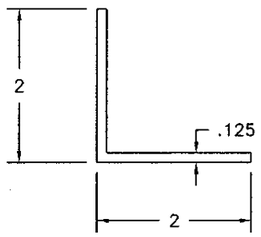

N1 2" x 2" x 1/8" ANGLE
6063-T5 ALLOY

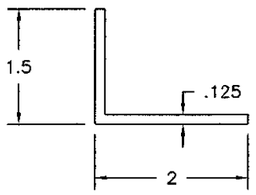

M1 1 1/2" x 2" x 1/8" ANGLE
6063-T5 ALLOY

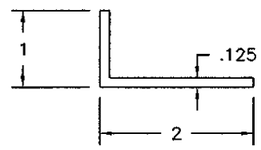

M2 1" x 2" x 1/8" ANGLE
6063-T5 ALLOY

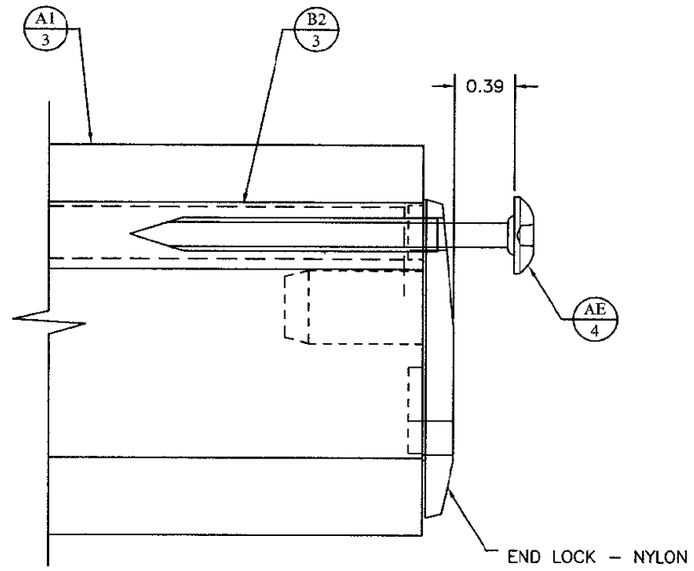

P55 TOP END RETENTION (P55TER) DETAIL
(EVERY SLAT)

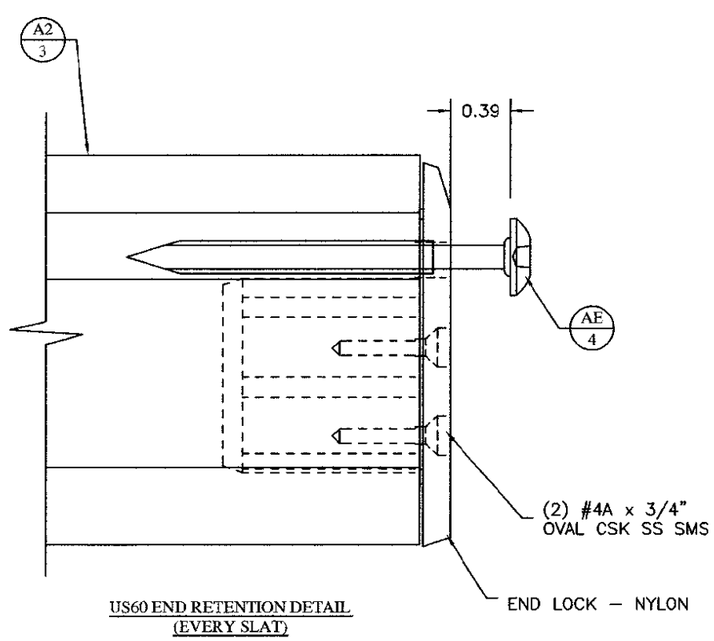

US60 END RETENTION DETAIL
(EVERY SLAT)

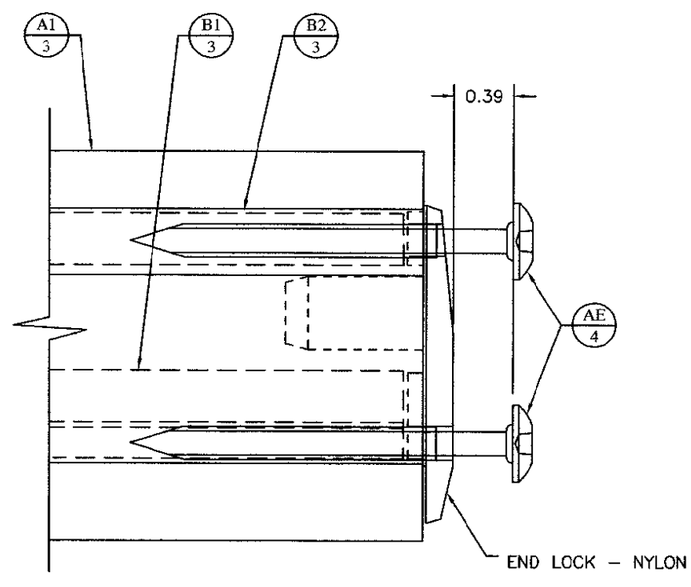

P55 DOUBLE END RETENTION DETAIL
(EVERY SLAT)

NOTE:
1. ALL UNITS IN INCHES.

Roll-a-way By QMI
1661 GLENLAKE AVENUE
ITASCA, IL 60143
COPYRIGHT © 2006
QMI

DRAWING TITLE:
NOTICE OF ACCEPTANCE
END RETENTION - TDI
PRODUCT APPROVAL

Donald L. Fowler
Professional Engineer
Texas License No.
102913

DRAWN:	DLF
DATE:	4-01-04
APPROVED:	DLF
DATE:	01-31-06
DRAWING NO:	3-01-035
SIZE: B	REV: B
SCALE:	Slats 1 : 1 ELSE 1 : 2
SHEET:	5 OF 26

ALLOWABLE SLAT SPAN TABLE

	****** LARGE MISSILE IMPACT SLATS ********			
P.S.F.	AL7-E	US60ER	P55DER	P55TER
10	233"	96"	156"	144"
15	233"	96"	156"	144"
20	233"	96"	156"	144"
25	233"	96"	152"	144"
30	233"	96"	149"	144"
35	233"	96"	145"	144"
40	224"	96"	141"	144"
45	212"	96"	137"	131"
50	202"	96"	134"	118"
55	192"	96"	130"	104"
60	182"	96"	127"	91"
65	172"	96"	123"	78"
70	162"	96"	119"	66"
75	152"	96"	115"	54"
80	142"	96"	112"	42"
85	132"	N/A	108"	N/A
90	122"	N/A	105"	N/A
95	112"	N/A	104"	N/A
100	102"	N/A	102"	N/A
120	N/A	N/A	95"	N/A
140	N/A	N/A	88"	N/A
160	N/A	N/A	81"	N/A
180	N/A	N/A	72"	N/A
200	N/A	N/A	65"	N/A
220	N/A	N/A	58"	N/A
240	N/A	N/A	51"	N/A
260	N/A	N/A	44"	N/A
280	N/A	N/A	37"	N/A

NOTES:
1. THESE PERFORMANCE SPAN CHARTS DO NOT GUARANTEE USAGE. TRACK ATTACHMENTS, BUILD-OUT, AND MULLIONS MUST BE VERIFIED PER INDIVIDUAL ALLOWABLE USAGE CHARTS.
2. SLAT TYPES ARE LARGE MISSILE IMPACT (ASTM E-1886/1996-05, MISSILE LEVEL "D") COMPLIANT.
3. THE P55DER SLAT TYPE IS RESTRICTED TO A 37" MINIMUM SPAN.

Roll-a-way By QMI
1661 GLENLAKE AVENUE
ITASCA, IL 60143
COPYRIGHT © 2008 QMI

DRAWING TITLE:
NOTICE OF ACCEPTANCE
END RETENTION - TDI
PRODUCT APPROVAL

Donald L. Powler
Professional Engineer
Texas License No.
102913

DRAWN:	DLF
DATE:	4-05-04
APPROVED:	DLF
DATE:	01-31-06
DRAWING NO:	3-01-035
SIZE: B	REV: B
SCALE:	FULL
SHEET:	6 OF 26

RECOMMENDED GLASS CLEARANCE (INCHES)

PSF\SLAT SPAN	48			60			72"			84"			96"			108"			120"			132"			144"			156"			168"			180"			192"			204"			216"			228"			240"		
	SLAT TYPE			SLAT TYPE			SLAT TYPE			SLAT TYPE			SLAT TYPE			SLAT TYPE			SLAT TYPE			SLAT TYPE			SLAT TYPE			SLAT TYPE			SLAT TYPE			SLAT TYPE			SLAT TYPE			SLAT TYPE			SLAT TYPE			SLAT TYPE			SLAT TYPE		
	A	B	C	A	B	C	A	B	C	A	B	C	A	B	C	A	B	C	A	B	C	A	B	C	A	B	C	A	B	C	A	B	C	A	B	C	A	B	C	A	B	C	A	B	C	A	B	C	A	B	C	A	B	C
10	1.2	1.2	1.7	2.4	1.4	2.9	3.5	1.6	4.0	3.8	2.9	4.3	4.1	4.3	4.6	4.4	4.7	4.9	4.7	5.0	5.2	5.0	5.1	5.5	5.3	5.2	5.8	5.6	5.3	6.1	-	5.4	-	-	5.5	-	-	5.5	-	-	5.6	-	-	5.6	-	-	5.6	-	-	7.8	-
15	1.3	1.3	1.8	2.5	1.7	3.0	3.5	2.4	4.0	3.8	3.6	4.3	4.1	4.4	4.6	4.4	4.9	4.9	4.7	5.3	5.2	5.0	5.8	5.5	5.3	5.6	5.8	5.6	5.7	6.1	-	5.8	-	-	5.9	-	-	6.0	-	-	6.1	-	-	6.1	-	-	6.1	-	-	8.4	-
20	1.4	1.4	1.9	2.6	1.9	3.1	3.6	3.2	4.1	3.9	4.1	4.4	4.2	4.6	4.7	4.5	5.1	5.0	4.8	5.5	5.3	5.1	6.3	5.6	5.4	5.9	5.9	5.7	6.1	6.2	-	6.3	-	-	6.4	-	-	6.5	-	-	6.6	-	-	6.6	-	-	6.6	-	-	8.9	-
25	1.5	1.5	2.0	2.7	1.9	3.2	3.6	3.8	4.1	3.9	4.2	4.4	4.2	4.7	4.7	4.5	5.3	5.0	4.8	5.7	5.3	5.1	6.7	5.6	5.4	6.3	5.9	-	6.5	-	-	6.7	-	-	6.9	-	-	7.0	-	-	7.1	-	-	7.1	-	-	7.1	-	-	9.5	-
30	1.6	1.6	2.1	2.8	2.3	3.3	3.6	3.9	4.1	3.9	4.4	4.4	4.2	4.9	4.7	4.5	5.6	5.0	4.8	6.0	5.3	5.1	7.1	5.6	5.4	6.6	5.9	-	6.9	-	-	7.1	-	-	7.3	-	-	7.5	-	-	7.6	-	-	7.6	-	-	7.6	-	-	10.0	-
35	1.7	1.7	2.2	2.9	2.7	3.4	3.7	3.9	4.2	4.0	4.5	4.5	4.3	5.1	4.8	4.6	5.8	5.1	4.9	6.2	5.4	5.2	7.6	5.7	5.5	7.0	6.0	-	7.3	-	-	7.5	-	-	7.8	-	-	8.0	-	-	8.1	-	-	8.2	-	-	8.1	-	-	10.6	-
40	1.8	1.8	2.3	3.0	3.0	3.5	3.7	4.0	4.2	4.0	4.6	4.5	4.3	5.2	4.8	4.6	6.0	5.1	4.9	6.5	5.4	5.2	8.0	5.7	-	7.3	-	-	7.7	-	-	8.0	-	-	8.3	-	-	8.5	-	-	8.6	-	-	8.7	-	-	8.6	-	-	-	-
45	1.9	1.9	2.4	3.1	3.4	3.6	3.7	4.1	4.2	4.0	4.7	4.5	4.3	5.4	4.8	4.6	6.2	5.1	4.9	6.7	5.4	5.2	8.5	5.7	-	7.7	-	-	8.1	-	-	8.4	-	-	8.7	-	-	9.0	-	-	9.1	-	-	9.2	-	-	9.1	-	-	-	-
50	2.0	2.0	2.5	3.2	3.5	3.7	3.7	4.2	4.2	4.0	4.9	4.5	4.3	5.5	4.8	4.7	6.4	5.2	5.1	7.0	5.6	5.5	8.9	6.0	-	8.0	-	-	8.4	-	-	8.8	-	-	9.2	-	-	9.5	-	-	9.7	-	-	9.7	-	-	-	-	-	-	-
55	2.1	2.1	2.6	3.2	3.5	3.7	3.8	4.3	4.3	4.1	5.0	4.6	4.4	5.7	4.9	4.8	6.6	5.3	5.2	7.2	5.7	5.6	9.3	-	-	8.4	-	-	8.8	-	-	9.3	-	-	9.7	-	-	10.0	-	-	10.2	-	-	-	-	-	-	-	-	-	-	-
60	2.2	2.2	2.7	3.3	3.6	3.8	3.8	4.4	4.3	4.1	5.1	4.6	4.5	5.8	5.0	4.9	6.8	5.4	5.3	7.5	5.8	-	9.8	-	-	8.7	-	-	9.2	-	-	9.7	-	-	10.1	-	-	10.5	-	-	10.7	-	-	-	-	-	-	-	-	-	-	-
65	2.3	2.3	2.8	3.3	3.7	3.8	3.8	4.5	4.3	4.2	5.2	4.7	4.5	6.0	5.0	4.9	7.0	5.4	5.3	7.7	5.8	-	10.2	-	-	9.1	-	-	9.6	-	-	10.1	-	-	10.6	-	-	10.9	-	-	-	-	-	-	-	-	-	-	-	-	-	-
70	2.5	2.4	3.0	3.4	3.7	3.9	3.9	4.6	4.4	4.2	5.3	4.7	4.6	6.2	5.1	5.0	7.2	5.5	5.4	7.9	-	-	10.6	-	-	9.4	-	-	10.0	-	-	10.6	-	-	11.0	-	-	-	-	-	-	-	-	-	-	-	-	-	-	-	-	-
75	2.6	2.5	3.1	3.4	3.8	3.9	3.9	4.7	4.4	4.3	5.5	4.8	4.7	6.3	5.2	5.1	7.4	5.6	-	8.2	-	-	11.1	-	-	9.8	-	-	10.4	-	-	11.0	-	-	-	-	-	-	-	-	-	-	-	-	-	-	-	-	-	-	-	-
80	2.7	2.6	3.2	3.2	3.8	3.7	4.0	4.7	4.5	4.4	5.6	4.9	4.7	6.5	5.2	5.1	7.6	5.6	-	8.4	-	-	11.5	-	-	10.1	-	-	10.8	-	-	-	-	-	-	-	-	-	-	-	-	-	-	-	-	-	-	-	-	-	-	-
85	2.8	2.7	3.3	3.3	3.9	3.8	4.0	4.8	4.5	4.4	5.7	4.9	4.8	6.6	-	5.2	7.8	-	-	8.7	-	-	11.9	-	-	10.5	-	-	-	-	-	-	-	-	-	-	-	-	-	-	-	-	-	-	-	-	-	-	-	-	-	-
90	2.9	2.8	3.4	3.4	4.0	3.9	4.0	4.9	4.5	4.5	5.8	5.0	4.9	6.8	-	-	8.0	-	-	8.9	-	-	12.4	-	-	10.8	-	-	-	-	-	-	-	-	-	-	-	-	-	-	-	-	-	-	-	-	-	-	-	-	-	-
95	3.0	3.0	3.5	3.5	4.0	4.0	4.1	5.0	4.6	4.5	6.0	5.0	5.0	6.9	-	-	8.2	-	-	9.2	-	-	12.8	-	-	-	-	-	-	-	-	-	-	-	-	-	-	-	-	-	-	-	-	-	-	-	-	-	-	-	-	-
100	3.1	3.1	3.6	3.6	4.1	4.1	4.1	5.1	4.6	4.6	6.1	5.1	5.1	7.1	-	-	8.4	-	-	9.4	-	-	-	-	-	-	-	-	-	-	-	-	-	-	-	-	-	-	-	-	-	-	-	-	-	-	-	-	-	-	-	-
120	3.3	3.5	3.8	3.8	4.3	4.3	4.3	5.5	-	4.8	6.6	-	5.3	7.7	-	-	9.2	-	-	-	-	-	-	-	-	-	-	-	-	-	-	-	-	-	-	-	-	-	-	-	-	-	-	-	-	-	-	-	-	-	-	-
140	3.5	-	4.0	4.0	-	4.5	4.5	-	-	5.0	-	-	-	-	-	-	-	-	-	-	-	-	-	-	-	-	-	-	-	-	-	-	-	-	-	-	-	-	-	-	-	-	-	-	-	-	-	-	-	-	-	-	-	-
160	3.7	-	4.2	4.2	-	-	4.7	-	-	-	-	-	-	-	-	-	-	-	-	-	-	-	-	-	-	-	-	-	-	-	-	-	-	-	-	-	-	-	-	-	-	-	-	-	-	-	-	-	-	-	-	-	-	-
180	3.8	-	4.3	4.3	-	-	4.8	-	-	-	-	-	-	-	-	-	-	-	-	-	-	-	-	-	-	-	-	-	-	-	-	-	-	-	-	-	-	-	-	-	-	-	-	-	-	-	-	-	-	-	-	-	-	-
200	3.9	-	-	4.4	-	-	-	-	-	-	-	-	-	-	-	-	-	-	-	-	-	-	-	-	-	-	-	-	-	-	-	-	-	-	-	-	-	-	-	-	-	-	-	-	-	-	-	-	-	-	-	-	-	-
220	3.9	-	-	-	-	-	-	-	-	-	-	-	-	-	-	-	-	-	-	-	-	-	-	-	-	-	-	-	-	-	-	-	-	-	-	-	-	-	-	-	-	-	-	-	-	-	-	-	-	-	-	-	-	-
240	4.0	-	-	-	-	-	-	-	-	-	-	-	-	-	-	-	-	-	-	-	-	-	-	-	-	-	-	-	-	-	-	-	-	-	-	-	-	-	-	-	-	-	-	-	-	-	-	-	-	-	-	-	-	-
260	-	-	-	-	-	-	-	-	-	-	-	-	-	-	-	-	-	-	-	-	-	-	-	-	-	-	-	-	-	-	-	-	-	-	-	-	-	-	-	-	-	-	-	-	-	-	-	-	-	-	-	-	-	-
280	-	-	-	-	-	-	-	-	-	-	-	-	-	-	-	-	-	-	-	-	-	-	-	-	-	-	-	-	-	-	-	-	-	-	-	-	-	-	-	-	-	-	-	-	-	-	-	-	-	-	-	-	-	-

SLAT TYPE	
A	P55TER, US60ER, AND P55DER
B	AL7-E
C	P55ER, P55ER 2ND, & 1138ER

Roll-a-way By QMI
1661 GLENLAKE AVENUE
ITASCA, IL 60143
COPYRIGHT © 2008 QMI

DRAWING TITLE:
NOTICE OF ACCEPTANCE
END RETENTION - TDI
PRODUCT APPROVAL

D.L. Fowler
Professional Engineer
Texas License No.
PE 102913

DRAWN:	DLF
DATE:	04-05-04
APPROVED:	DLF
DATE:	01-31-06
DRAWING NO:	3-01-035
SIZE: B	REV: B
SCALE:	1/2" = 1'-0"
SHEET:	7 OF 26

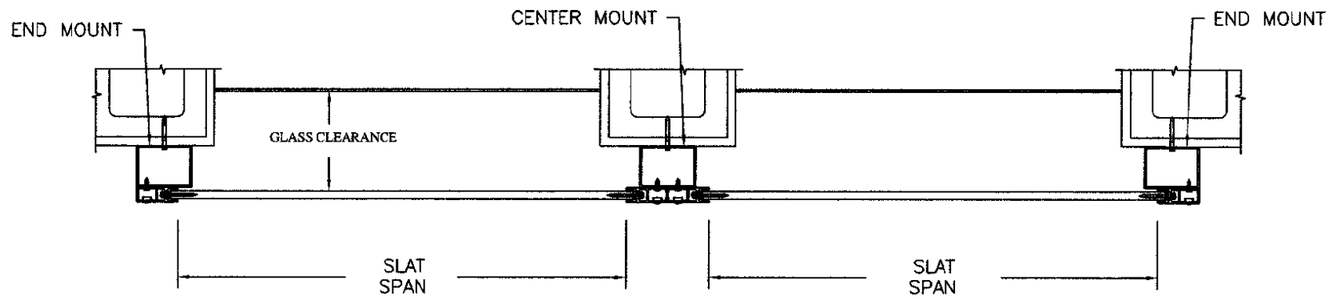

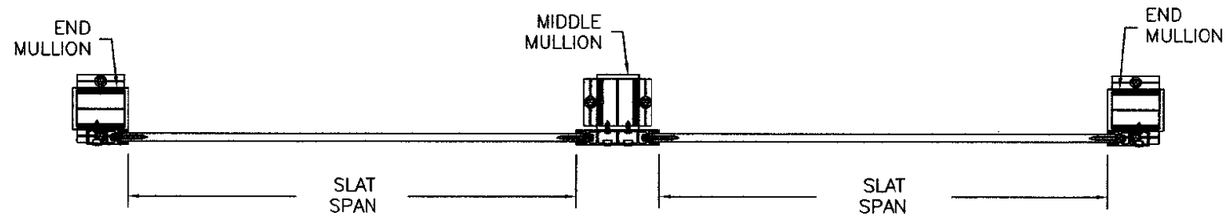

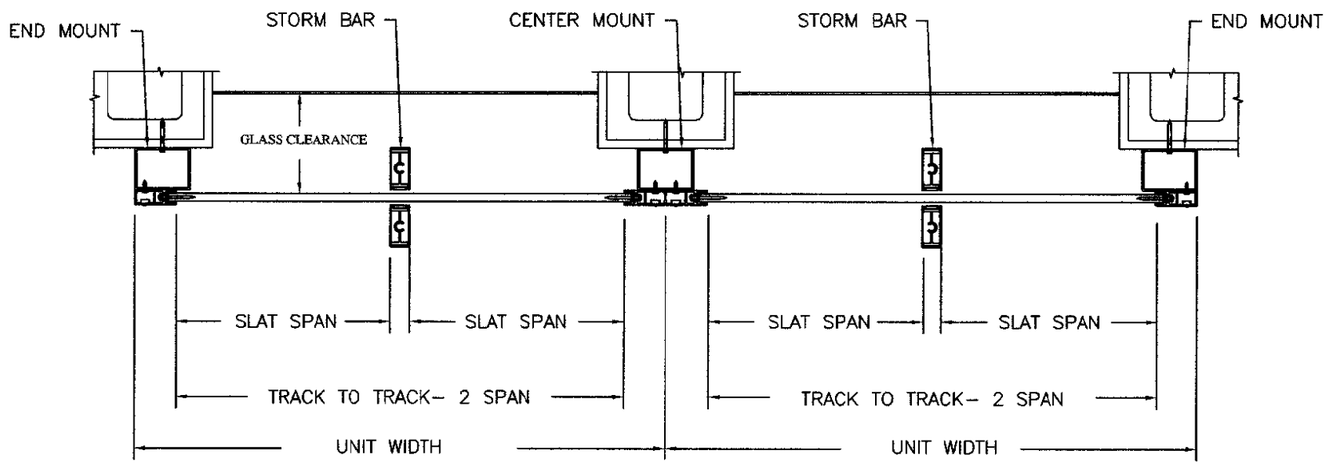

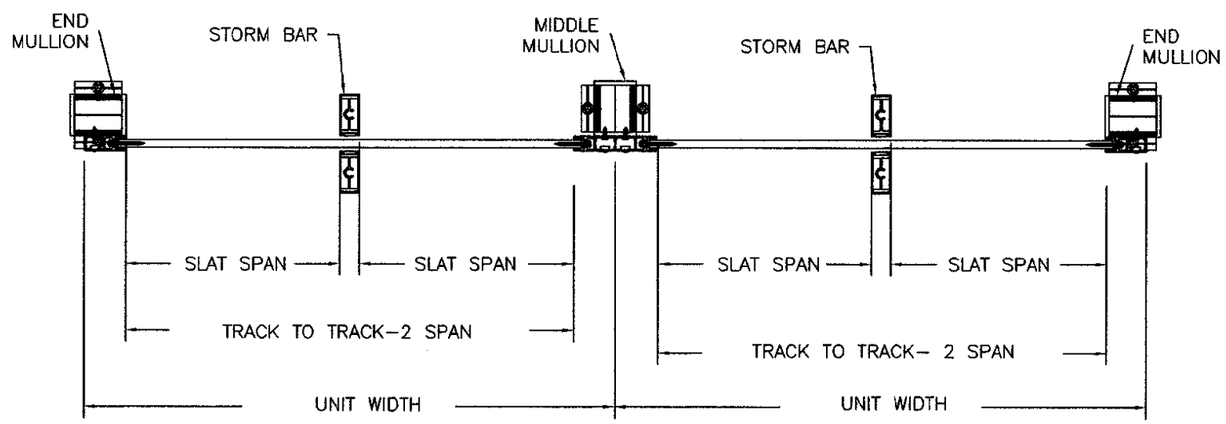

Roll-a-way
By QMI
1661 GLENLAKE AVENUE
ITASCA, IL 60143
COPYRIGHT © 2009 QMI

DRAWING TITLE:

NOTICE OF ACCEPTANCE
END RETENTION - TDI
PRODUCT APPROVAL

D.L. Fowler
Professional Engineer
Texas License No.
PE 102913

DRAWN:	DLF
DATE:	10-21-09
APPROVED:	DLF
DATE:	10-21-09
DRAWING NO:	3-01-035
SIZE: B	REV: B
SCALE:	1/2" = 1'-0"
SHEET:	8 OF 26

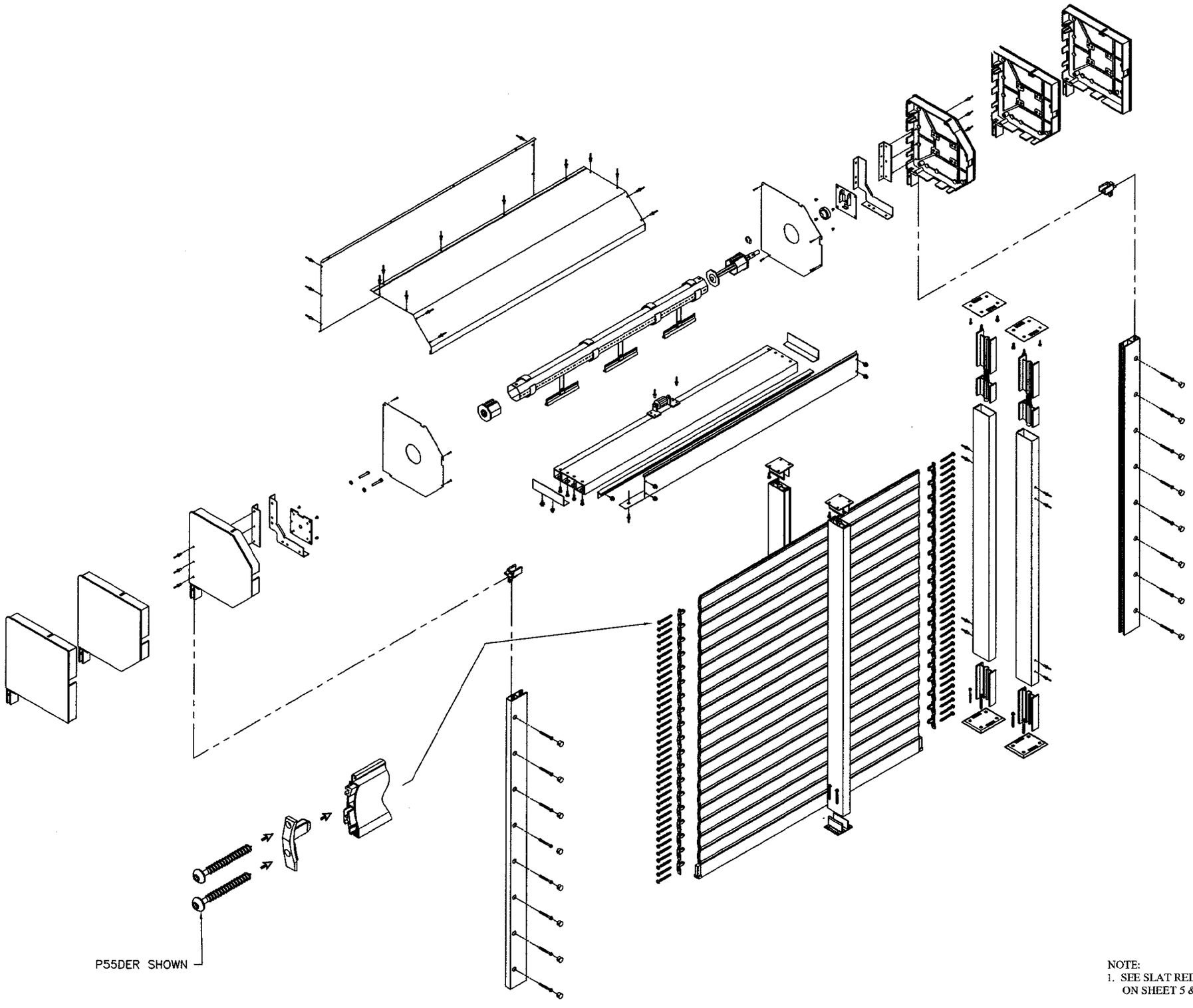

NOTE:
1. SEE SLAT REINFORCEMENT DETAILS ON SHEET 5 & 6 OF 25.

Roll-a-way By QMI
1661 GLENLAKE AVENUE
ITASCA, IL 60143
COPYRIGHT © 2006 QMI

DRAWING TITLE:
NOTICE OF ACCEPTANCE
END RETENTION - TDI
PRODUCT APPROVAL

Donald L. Fowler
Professional Engineer
Texas License No.
102913

DRAWN:	DLF
DATE:	04-26-04
APPROVED:	DLF
DATE:	01-31-06
DRAWING NO:	3-01-035
SIZE: B	REV: B
SCALE:	N.T.S.
SHEET:	9 OF 26

SECTION "A-A" (1)

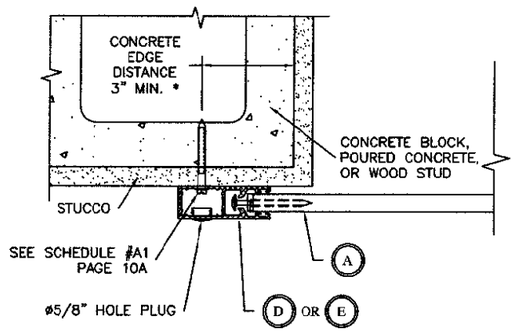

SECTION "A-A" (2)

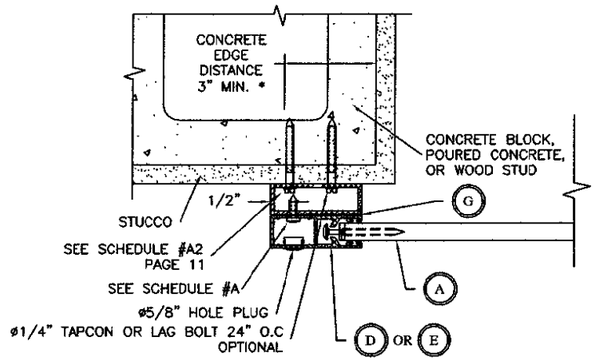

SECTION "A-A" (3)

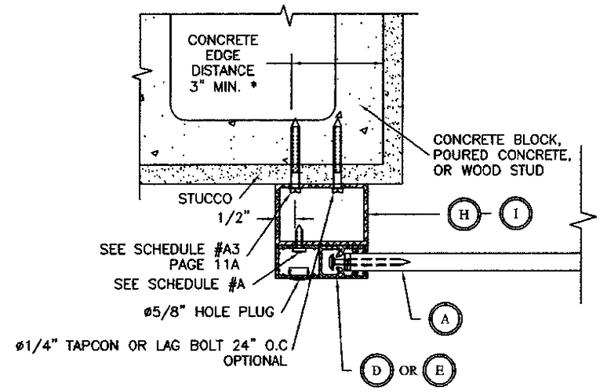

* WOOD SCREWS SHALL BE CENTERED IN 2" FACE OF STUD.

HOLE SPACING O.C. SCHEDULE # A *

PSF\SLAT SPAN	36"	42"	48"	54"	60"	66"	72"	84	96	108	120	144	156	168	180	192	204	216	228	240
10	18	18	18	18	18	18	18	18	18	18	15	10	9	8	7	6	6	5	5	5
15	18	18	18	18	18	18	18	18	15	12	9	7	6	6	5	4	4	4	3	3
20	18	18	18	18	18	18	18	14	11	8	7	5	5	4	4	4	3	3	3	2
25	18	18	18	18	18	18	16	11	8	7	6	4	4	4	3	3	3	3	2	2
30	18	18	18	18	18	16	13	9	7	6	5	4	3	3	3	3	2	2	2	2
35	18	18	18	18	17	13	10	7	6	5	4	3	3	3	2	2	2	1.5	1.5	1.5
40	18	18	18	18	13	10	8	6	5	4	4	3	3	2	2	2	1.5	1.5	1.5	1.5
45	18	18	18	16	12	9	7	6	5	4	3	3	2	2	2	1.5	1.5	1.5	1.5	1.5
50	18	18	18	14	10	8	7	5	4	3	3	2	2	2	1.5	1.5	1.5	1.5	1	1
55	18	18	17	11	9	7	6	5	4	3	3	2	2	1.5	1.5	1.5	1.5	1	1	1
60	18	18	15	10	8	6	5	4	3	3	3	2	1.5	1.5	1.5	1.5	1	1	1	1
65	18	18	13	9	7	6	5	4	3	3	2	2	1.5	1.5	1.5	1	1	1	1	1
70	18	17	12	8	7	5	5	4	3	3	2	1.5	1.5	1.5	1	1	1	1	1	1
75	18	15	11	8	6	5	4	3	3	2	2	1.5	1.5	1.5	1	1	1	1	1	1
80	18	14	10	7	6	5	4	3	3	2	2	1.5	1.5	1	1	1	1	1	1	N/A
85	18	13	9	7	5	4	4	3	3	2	1.5	1.5	1.5	1	1	1	1	1	N/A	N/A
90	18	12	8	6	5	4	4	3	2	2	1.5	1.5	1	1	1	1	1	1	N/A	N/A
95	18	11	8	6	5	4	3	3	2	2	1.5	1.5	1	1	1	1	1	1	N/A	N/A
100	18	10	7	5	4	4	3	3	2	1.5	1.5	1	1	1	1	1	N/A	N/A	N/A	N/A
120	12	8	5	4	4	3	3	2	1.5	1.5	1.5	1	1	1	N/A	N/A	N/A	N/A	N/A	N/A
140	10	6	5	4	3	3	2	2	1.5	1.5	1	1	1	N/A	N/A	N/A	N/A	N/A	N/A	N/A
160	8	5	4	3	3	2	2	1.5	1.5	1	1	N/A	N/A	N/A	N/A	N/A	N/A	N/A	N/A	N/A
180	7	4	4	3	2	2	2	1.5	1	1	1	N/A	N/A	N/A	N/A	N/A	N/A	N/A	N/A	N/A
200	6	4	3	3	2	2	1.5	1.5	1	1	1	N/A	N/A	N/A	N/A	N/A	N/A	N/A	N/A	N/A
220	5	4	3	2	2	2	1.5	1	1	1	N/A	N/A	N/A	N/A	N/A	N/A	N/A	N/A	N/A	N/A
240	4	3	3	2	1.5	1.5	1.5	1	1	N/A	N/A	N/A	N/A	N/A	N/A	N/A	N/A	N/A	N/A	N/A
260	4	3	2	2	1.5	1.5	1	1	1	N/A	N/A	N/A	N/A	N/A	N/A	N/A	N/A	N/A	N/A	N/A
280	4	3	2	1.5	1.5	1.5	1	1	N/A	N/A	N/A	N/A	N/A	N/A	N/A	N/A	N/A	N/A	N/A	N/A

*1/8" ALUM 6063-T6 ALLOY, # 14 X 3/4" SS SMS (MINIMUM 2" O.C. FOR HOLLOW CAVITY RAILS)

Roll-a-way
By QMI
1661 GLENLAKE AVENUE
ITASCA, IL 60143

COPYRIGHT © 2008
QUALITAS MANUFACTURING INC.

DRAWING TITLE:

NOTICE OF ACCEPTANCE
END RETENTION - TDI
PRODUCT APPROVAL

D.L. Fowler
Professional Engineer
Texas License No.
PE 102913

DRAWN:	DLF
DATE:	10-21-09
APPROVED:	DLF
DATE:	10-21-09
DRAWING NO:	3-01-035
SIZE: B	REV: B
SCALE:	1 : 4
SHEET:	10 OF 26

FASTENER DRILLING O.C. (INCHES) SCHEDULE A1

PSF\SLAT SPAN	48" Fastener						60" Fastener						72" Fastener						84" Fastener						96" Fastener					
	A	B	C	D	E	F	A	B	C	D	E	F	A	B	C	D	E	F	A	B	C	D	E	F	A	B	C	D	E	F
10	24	24	24	24	24	24	24	24	24	24	24	24	24	24	24	24	24	24	24	21	24	24	24	24	12	17	23	24	24	24
15	24	21	24	24	24	24	24	28	24	24	24	24	21	16	24	24	24	24	10	13	19	24	24	24	7	11	14	17	24	24
20	24	18	24	24	24	24	24	13	24	24	24	24	12	12	20	24	24	24	7	10	13	16	24	24	5	8	10	12	22	24
25	24	13	24	24	24	24	18	11	23	24	24	24	8	9	14	18	24	24	5	8	10	12	23	24	4	6	8	10	17	24
30	21	11	24	24	24	24	12	10	18	24	24	24	6	8	11	14	24	24	4	6	8	10	18	24	3	5	7	8	14	23
35	18	10	21	24	24	24	10	8	15	22	24	24	5	7	9	12	21	24	4	5	7	8	15	24	3	4	6	7	12	20
40	16	8	18	24	24	24	8	7	12	17	24	24	4	6	8	10	18	24	3	5	6	8	14	22	3	4	5	6	11	17
45	14	7	16	24	24	24	7	6	11	14	24	24	4	5	7	9	16	24	3	4	6	7	12	19	-	3	4	5	10	15
50	12	7	14	24	24	24	6	6	9	12	23	24	3	5	6	8	14	23	3	4	5	6	11	17	-	3	4	5	9	14
55	11	6	13	23	24	24	5	5	8	11	20	24	3	4	6	7	13	21	-	3	5	5	10	16	-	3	4	4	8	13
60	9	6	11	18	24	24	4	5	7	10	18	24	3	4	5	6	12	19	-	3	4	5	9	14	-	3	3	4	7	12
65	8	5	11	17	24	24	4	4	7	9	16	24	3	3	5	6	11	17	-	3	4	5	8	13	-	-	3	4	7	11
70	7	5	10	15	24	24	4	4	6	8	15	23	-	3	4	5	10	16	-	3	4	4	8	12	-	-	3	4	7	10
75	6	5	9	13	24	24	3	4	6	7	14	21	-	3	4	5	9	15	-	3	3	4	8	12	-	-	3	3	6	10
80	6	4	8	12	23	24	3	4	5	7	12	19	-	3	4	5	9	14	-	-	3	4	7	11	-	-	3	3	6	9
85	5	4	7	11	21	24	3	3	5	6	12	18	-	3	4	5	8	13	-	-	3	4	7	11	-	-	3	3	6	9
90	5	4	7	10	19	24	3	3	5	6	11	17	-	3	4	4	8	13	-	-	3	4	6	10	-	-	-	3	5	8
95	5	4	7	10	18	24	3	3	4	6	10	16	-	-	3	4	7	12	-	-	3	3	6	10	-	-	-	3	5	8
100	4	4	6	9	16	24	-	3	4	5	10	15	-	-	3	4	7	11	-	-	3	3	6	9	-	-	-	3	5	8
120	3	3	5	7	14	20	-	-	3	4	8	13	-	-	3	3	6	10	-	-	-	3	5	8	-	-	-	-	-	7
140	3	3	4	6	11	16	-	-	3	4	7	11	-	-	-	3	5	8	-	-	-	-	-	7	-	-	-	-	-	6
160	-	-	4	5	9	14	-	-	3	3	6	10	-	-	-	3	5	8	-	-	-	-	-	6	-	-	-	-	-	5
180	-	-	3	4	8	12	-	-	-	3	6	9	-	-	-	-	-	7	-	-	-	-	-	6	-	-	-	-	-	5
200	-	-	-	4	7	11	-	-	-	3	5	8	-	-	-	-	-	6	-	-	-	-	-	5	-	-	-	-	-	5
220	-	-	-	4	7	10	-	-	-	3	5	7	-	-	-	-	-	6	-	-	-	-	-	5	-	-	-	-	-	-
240	-	-	-	3	6	9	-	-	-	-	-	7	-	-	-	-	-	5	-	-	-	-	-	5	-	-	-	-	-	-
260	-	-	-	3	6	9	-	-	-	-	-	6	-	-	-	-	-	5	-	-	-	-	-	-	-	-	-	-	-	-
280	-	-	-	3	5	8	-	-	-	-	-	6	-	-	-	-	-	5	-	-	-	-	-	-	-	-	-	-	-	-

PSF\SLAT SPAN	108" Fastener						120" Fastener						132" Fastener						144" Fastener						156" Fastener					
	A	B	C	D	E	F	A	B	C	D	E	F	A	B	C	D	E	F	A	B	C	D	E	F	A	B	C	D	E	F
10	9	14	18	21	24	24	7	12	14	17	24	24	6	10	12	14	24	24	5	9	10	12	22	24	4	7	9	10	19	24
15	6	9	11	13	24	24	5	7	9	11	19	24	4	6	8	9	16	24	3	6	7	8	14	23	3	5	6	7	13	21
20	4	7	8	10	17	24	3	6	7	8	14	23	3	5	6	7	13	20	3	4	5	6	11	18	-	4	5	6	10	16
25	3	5	7	8	14	22	3	5	6	7	12	19	-	4	5	6	10	17	-	4	4	5	9	15	-	3	4	5	8	13
30	3	4	6	7	12	19	-	4	5	6	10	16	-	3	4	5	9	14	-	3	4	4	8	13	-	3	3	4	7	11
35	-	4	5	6	10	16	-	3	4	5	9	14	-	3	4	4	8	12	-	3	3	4	7	11	-	-	3	3	6	10
40	-	3	4	5	9	14	-	3	4	4	8	13	-	3	3	4	7	11	-	-	3	3	6	10	-	-	3	3	6	9
45	-	3	4	4	8	13	-	3	3	4	7	11	-	-	3	3	6	10	-	-	3	3	6	9	-	-	-	3	5	8
50	-	3	3	4	7	12	-	-	3	4	6	10	-	-	3	3	6	9	-	-	-	3	5	8	-	-	-	3	5	8
55	-	-	3	4	7	11	-	-	3	3	6	10	-	-	3	3	5	9	-	-	-	3	5	8	-	-	-	-	-	7
60	-	-	3	4	6	10	-	-	3	3	6	9	-	-	-	3	5	8	-	-	-	3	5	7	-	-	-	-	-	7
65	-	-	3	3	6	10	-	-	-	3	5	8	-	-	-	3	5	8	-	-	-	-	-	7	-	-	-	-	-	6
70	-	-	3	3	6	9	-	-	-	3	5	8	-	-	-	-	-	7	-	-	-	-	-	6	-	-	-	-	-	6
75	-	-	-	3	5	9	-	-	-	3	5	8	-	-	-	-	-	7	-	-	-	-	-	6	-	-	-	-	-	6
80	-	-	-	3	5	8	-	-	-	-	5	7	-	-	-	-	-	6	-	-	-	-	-	6	-	-	-	-	-	5
85	-	-	-	3	5	8	-	-	-	-	-	7	-	-	-	-	-	6	-	-	-	-	-	6	-	-	-	-	-	5
90	-	-	-	3	5	7	-	-	-	-	-	7	-	-	-	-	-	6	-	-	-	-	-	5	-	-	-	-	-	5
95	-	-	-	-	-	7	-	-	-	-	-	6	-	-	-	-	-	6	-	-	-	-	-	5	-	-	-	-	-	5
100	-	-	-	-	-	7	-	-	-	-	-	6	-	-	-	-	-	5	-	-	-	-	-	5	-	-	-	-	-	5
120	-	-	-	-	-	6	-	-	-	-	-	5	-	-	-	-	-	5	-	-	-	-	-	-	-	-	-	-	-	-
140	-	-	-	-	-	5	-	-	-	-	-	5	-	-	-	-	-	-	-	-	-	-	-	-	-	-	-	-	-	-
160	-	-	-	-	-	5	-	-	-	-	-	-	-	-	-	-	-	-	-	-	-	-	-	-	-	-	-	-	-	-
180	-	-	-	-	-	-	-	-	-	-	-	-	-	-	-	-	-	-	-	-	-	-	-	-	-	-	-	-	-	-
200	-	-	-	-	-	-	-	-	-	-	-	-	-	-	-	-	-	-	-	-	-	-	-	-	-	-	-	-	-	-
220	-	-	-	-	-	-	-	-	-	-	-	-	-	-	-	-	-	-	-	-	-	-	-	-	-	-	-	-	-	-
240	-	-	-	-	-	-	-	-	-	-	-	-	-	-	-	-	-	-	-	-	-	-	-	-	-	-	-	-	-	-
260	-	-	-	-	-	-	-	-	-	-	-	-	-	-	-	-	-	-	-	-	-	-	-	-	-	-	-	-	-	-
280	-	-	-	-	-	-	-	-	-	-	-	-	-	-	-	-	-	-	-	-	-	-	-	-	-	-	-	-	-	-

PSF\SLAT SPAN	168" Fastener						180" Fastener						192" Fastener						204" Fastener						216" Fastener					
	A	B	C	D	E	F	A	B	C	D	E	F	A	B	C	D	E	F	A	B	C	D	E	F	A	B	C	D	E	F
10	4	7	8	9	17	24	4	6	7	9	15	24	3	6	7	8	14	22	3	5	6	7	13	21	3	5	6	7	12	19
15	3	5	6	6	12	19	3	4	5	6	11	17	-	4	5	5	10	16	-	4	4	5	9	15	-	3	4	5	8	13
20	-	4	4	5	9	15	-	3	4	5	8	13	-	3	4	4	8	12	-	3	3	4	7	11	-	3	3	4	7	11
25	-	3	4	4	8	12	-	3	3	4	7	11	-	3	3	4	6	10	-	-	3	3	6	10	-	-	3	3	6	9
30	-	3	3	4	6	10	-	-	3	3	6	10	-	-	-	3	6	9	-	-	-	3	5	8	-	-	-	3	5	8
35	-	-	3	3	6	9	-	-	3	3	5	9	-	-	-	3	5	8	-	-	-	3	5	7	-	-	-	-	-	7
40	-	-	-	3	5	8	-	-	-	3	5	8	-	-	-	-	-	7	-	-	-	-	-	7	-	-	-	-	-	6
45	-	-	-	3	5	8	-	-	-	-	-	7	-	-	-	-	-	7	-	-	-	-	-	6	-	-	-	-	-	6
50	-	-	-	-	-	7	-	-	-	-	-	6	-	-	-	-	-	6	-	-	-	-	-	6	-	-	-	-	-	5
55	-	-	-	-	-	7	-	-	-	-	-	6	-	-	-	-	-	6	-	-	-	-	-	5	-	-	-	-	-	5
60	-	-	-	-	-	6	-	-	-	-	-	6	-	-	-	-	-	5	-	-	-	-	-	5	-	-	-	-	-	5
65	-	-	-	-	-	6	-	-	-	-	-	5	-	-	-	-	-	5	-	-	-	-	-	5	-	-	-	-	-	-
70	-	-	-	-	-	5	-	-	-	-	-	5	-	-	-	-	-	5	-	-	-	-	-	-	-	-	-	-	-	-
75	-	-	-	-	-	5	-	-	-	-	-	5	-	-	-	-	-	-	-	-	-	-	-	-	-	-	-	-	-	-
80	-	-	-	-	-	5	-	-	-	-	-	5	-	-	-	-	-	-	-	-	-	-	-	-	-	-	-	-	-	-
85	-	-	-	-	-	5	-	-	-	-	-	-	-	-	-	-	-	-	-	-	-	-	-	-	-	-	-	-	-	-
90	-	-	-	-	-	5	-	-	-	-	-	-	-	-	-	-	-	-	-	-	-	-	-	-	-	-	-	-	-	-
95	-	-	-	-	-	-	-	-	-	-	-	-	-	-	-	-	-	-	-	-	-	-	-	-	-	-	-	-	-	-
100	-	-	-	-	-	-	-	-	-	-	-	-	-	-	-	-	-	-	-	-	-	-	-	-	-	-	-	-	-	-
120	-	-	-	-	-	-	-	-	-	-	-	-	-	-	-	-	-	-	-	-	-	-	-	-	-	-	-	-	-	-
140	-	-	-	-	-	-	-	-	-	-	-	-	-	-	-	-	-	-	-	-	-	-	-	-	-	-	-	-	-	-
160	-	-	-	-	-	-	-	-	-	-	-	-	-	-	-	-	-	-	-	-	-	-	-	-	-	-	-	-	-	-
180	-	-	-	-	-	-	-	-	-	-	-	-	-	-	-	-	-	-	-	-	-	-	-	-	-	-	-	-	-	-
200	-	-	-	-	-	-	-	-	-	-	-	-	-	-	-	-	-	-	-	-	-	-	-	-	-	-	-	-	-	-
220	-	-	-	-	-	-	-	-	-	-	-	-	-	-	-	-	-	-	-	-	-	-	-	-	-	-	-	-	-	-
240	-	-	-	-	-	-	-	-	-	-	-	-	-	-	-	-	-	-	-	-	-	-	-	-	-	-	-	-	-	-
260	-	-	-	-	-	-	-	-	-	-	-	-	-	-	-	-	-	-	-	-	-	-	-	-	-	-	-	-	-	-
280	-	-	-	-	-	-	-	-	-	-	-	-	-	-	-	-	-	-	-	-	-	-	-	-	-	-	-	-	-	-

PSF\SLAT SPAN	228" Fastener						240" Fastener					
	A	B	C	D	E	F	A	B	C	D	E	F
10	3	4	5	6	11	18	-	4	5	6	10	17
15	-	3	4	4	8	13	-	3	4	4	7	12
20	-	-	3	3	6	10	-	-	3	3	6	9
25	-	-	3	3	5	8	-	-	-	3	5	8
30	-	-	-	3	5	7	-	-	-	-	-	7
35	-	-	-	-	-	7	-	-	-	-	-	6
40	-	-	-	-	-	6	-	-	-	-	-	6
45	-	-	-	-	-	5	-	-	-	-	-	5
50	-	-	-	-	-	5	-	-	-	-	-	5
55	-	-	-	-	-	5	-	-	-	-	-	-
60	-	-	-	-	-	-	-	-	-	-	-	-
65	-	-	-	-	-	-	-	-	-	-	-	-
70	-	-	-	-	-	-	-	-	-	-	-	-
75	-	-	-	-	-	-	-	-	-	-	-	-
80	-	-	-	-	-	-	-	-	-	-	-	-
85	-	-	-	-	-	-	-	-	-	-	-	-
90	-	-	-	-	-	-	-	-	-	-	-	-
95	-	-	-	-	-	-	-	-	-	-	-	-
100	-	-	-	-	-	-	-	-	-	-	-	-
120	-	-	-	-	-	-	-	-	-	-	-	-
140	-	-	-	-	-	-	-	-	-	-	-	-
160	-	-	-	-	-	-	-	-	-	-	-	-
180	-	-	-	-	-	-	-	-	-	-	-	-
200	-	-	-	-	-	-	-	-	-	-	-	-
220	-	-	-	-	-	-	-	-	-	-	-	-
240	-	-	-	-	-	-	-	-	-	-	-	-
260	-	-	-	-	-	-	-	-	-	-	-	-
280	-	-	-	-	-	-	-	-	-	-	-	-

#	Fastener	Edge Distance	Min. Embedment	Substrate
A	1/4" Tapcon	1-1/2"	1-1/2"	Wood (fastener in center of stud)
B	1/4" Tapcon	3"	1-1/4"	CMU Hollow
C	1/4" Tapcon	3"	1-3/4"	4000 PSI Concrete or Cell Filled CMU
D	1/4" Wedge Bolt	4.25"	3"	4000 PSI Concrete or Cell Filled CMU
E	3/8" Wedge Bolt	4.25"	4.5"	4000 PSI Concrete or Cell Filled CMU
F	3/8" Wedge Bolt	5.25"	4.5"	4000 PSI Concrete or Cell Filled CMU

Roll·a·way By QMI

1661 GLENLAKE AVENUE
ITASCA, IL 60143
COPYRIGHT © 2008
QUALITAS MANUFACTURING INC.

DRAWING TITLE:
NOTICE OF ACCEPTANCE
END RETENTION - TDI
PRODUCT APPROVAL

D.L. Fowler
Professional Engineer
Texas License No.
PE 102913

DRAWN:	DLF
DATE:	10-21-09
APPROVED:	DLF
DATE:	10-21-09
DRAWING NO:	3-01-035
SIZE: B	REV: -
SCALE:	1 : 4
SHEET:	10A OF 26

FASTENER DRILLING O.C. (INCHES) SCHEDULE A2

PSF\SLAT SPAN	48"						60"						72"						84"						96"						108"						120"						132"						144"						156"						168"						180"						192"						204"						216"						228"						240"					
	Fastener						Fastener						Fastener						Fastener						Fastener						Fastener						Fastener						Fastener						Fastener						Fastener						Fastener						Fastener						Fastener						Fastener						Fastener						Fastener						Fastener					
	A	B	C	D	E	F	A	B	C	D	E	F	A	B	C	D	E	F	A	B	C	D	E	F	A	B	C	D	E	F	A	B	C	D	E	F	A	B	C	D	E	F	A	B	C	D	E	F	A	B	C	D	E	F	A	B	C	D	E	F	A	B	C	D	E	F	A	B	C	D	E	F	A	B	C	D	E	F	A	B	C	D	E	F	A	B	C	D	E	F	A	B	C	D	E	F	A	B	C	D	E	F
10	24	24	24	24	24	24	24	24	24	24	24	24	24	24	24	24	24	24	24	24	24	24	24	24	12	14	21	24	24	24	9	10	15	20	24	24	7	8	12	16	24	24	6	7	10	13	24	24	5	6	9	11	21	24	4	5	7	10	18	24	4	5	7	9	16	25	4	4	6	8	15	23	3	4	6	7	13	21	-	3	5	7	12	19	-	3	5	6	11	18	-	-	4	6	11	17	-	-	4	5	10	16
15	24	24	24	24	24	24	24	24	24	24	24	24	24	24	24	24	24	24	10	12	18	23	24	24	7	8	12	16	24	24	6	6	10	13	23	24	5	5	8	10	19	24	4	4	7	9	16	24	3	4	6	8	14	22	-	3	5	7	12	19	-	3	5	6	11	17	-	-	4	6	10	16	-	-	4	5	9	15	-	-	4	5	9	14	-	-	3	4	8	13	-	-	3	4	8	12	-	-	-	4	7	11
20	24	24	24	24	24	24	24	24	24	24	24	24	12	14	21	24	24	24	7	8	12	16	24	24	5	6	9	11	21	24	4	5	7	9	17	24	3	4	6	8	14	22	-	3	5	7	12	19	-	3	4	6	11	17	-	-	4	5	10	15	-	-	4	5	9	14	-	-	3	4	8	12	-	-	3	4	7	12	-	-	-	4	7	11	-	-	-	3	6	10	-	-	-	3	6	9	-	-	-	3	6	9
25	24	24	24	24	24	24	24	24	24	24	24	24	8	9	14	18	24	24	5	6	9	12	22	24	4	5	7	9	17	24	3	4	6	7	14	21	-	3	5	6	12	18	-	-	4	5	10	16	-	-	4	5	9	14	-	-	3	4	8	12	-	-	3	4	7	11	-	-	-	4	7	10	-	-	-	3	6	10	-	-	-	3	6	9	-	-	-	3	5	8	-	-	-	3	5	8	-	-	-	3	-	7
30	24	24	24	24	24	24	14	14	23	24	24	24	6	7	10	14	24	24	4	5	7	9	18	24	3	4	6	8	14	22	-	3	5	6	12	18	-	-	4	5	10	15	-	-	4	5	9	13	-	-	3	4	8	12	-	-	-	4	7	11	-	-	-	3	6	10	-	-	-	3	6	9	-	-	-	3	5	8	-	-	-	3	5	8	-	-	-	3	-	7	-	-	-	-	-	7	-	-	-	-	-	7
35	24	24	24	24	24	24	11	12	19	25	24	24	5	6	9	11	21	24	4	4	6	8	15	24	-	3	5	7	12	19	-	-	4	5	10	16	-	-	4	5	9	13	-	-	3	4	8	12	-	-	-	4	7	10	-	-	-	3	6	9	-	-	-	3	6	9	-	-	-	3	5	8	-	-	-	3	-	7	-	-	-	-	-	7	-	-	-	-	-	7	-	-	-	-	-	6	-	-	-	-	-	6
40	24	24	24	24	24	24	8	9	14	18	24	24	4	5	7	10	18	24	3	4	6	7	13	21	-	-	4	6	10	16	-	-	4	5	9	14	-	-	3	4	8	12	-	-	-	4	7	10	-	-	-	3	6	9	-	-	-	3	5	9	-	-	-	3	5	8	-	-	-	3	-	7	-	-	-	-	-	7	-	-	-	-	-	6	-	-	-	-	-	6	-	-	-	-	-	6	-	-	-	-	-	5
45	24	24	24	24	24	24	7	7	11	15	24	24	4	4	7	9	16	24	-	3	5	6	12	18	-	-	4	5	9	15	-	-	3	4	8	12	-	-	-	4	7	11	-	-	-	3	6	10	-	-	-	3	6	9	-	-	-	3	5	8	-	-	-	-	-	7	-	-	-	-	-	7	-	-	-	-	-	6	-	-	-	-	-	6	-	-	-	-	-	5	-	-	-	-	-	5	-	-	-	-	-	-
50	22	20	24	24	24	24	6	6	9	12	23	24	3	4	6	8	14	22	-	-	4	6	11	17	-	-	4	5	9	13	-	-	-	4	7	11	-	-	-	3	6	10	-	-	-	3	6	9	-	-	-	3	5	8	-	-	-	-	-	7	-	-	-	-	-	7	-	-	-	-	-	6	-	-	-	-	-	6	-	-	-	-	-	5	-	-	-	-	-	5	-	-	-	-	-	-	-	-	-	-	-	-
55	19	18	24	24	24	24	5	5	8	11	21	24	3	4	5	7	13	20	-	-	4	5	10	15	-	-	3	4	8	12	-	-	-	4	7	10	-	-	-	3	6	9	-	-	-	3	5	8	-	-	-	3	-	7	-	-	-	-	-	7	-	-	-	-	-	6	-	-	-	-	-	6	-	-	-	-	-	5	-	-	-	-	-	5	-	-	-	-	-	-	-	-	-	-	-	-	-	-	-	-	-	-
60	11	11	17	24	24	24	4	5	8	10	19	24	-	3	5	6	12	18	-	-	4	5	9	14	-	-	3	4	7	11	-	-	-	3	6	10	-	-	-	3	5	8	-	-	-	3	-	8	-	-	-	-	-	7	-	-	-	-	-	6	-	-	-	-	-	6	-	-	-	-	-	5	-	-	-	-	-	5	-	-	-	-	-	-	-	-	-	-	-	-	-	-	-	-	-	-	-	-	-	-	-	-
65	9	10	16	21	24	24	4	4	7	9	16	24	-	-	4	6	11	17	-	-	3	4	8	13	-	-	-	4	7	11	-	-	-	3	6	9	-	-	-	3	5	8	-	-	-	-	-	7	-	-	-	-	-	6	-	-	-	-	-	6	-	-	-	-	-	5	-	-	-	-	-	5	-	-	-	-	-	-	-	-	-	-	-	-	-	-	-	-	-	-	-	-	-	-	-	-	-	-	-	-	-	-
70	9	9	14	19	24	24	4	4	6	8	15	24	-	-	4	5	10	15	-	-	3	4	8	12	-	-	-	3	6	10	-	-	-	3	6	9	-	-	-	3	-	8	-	-	-	-	-	7	-	-	-	-	-	6	-	-	-	-	-	6	-	-	-	-	-	5	-	-	-	-	-	-	-	-	-	-	-	-	-	-	-	-	-	-	-	-	-	-	-	-	-	-	-	-	-	-	-	-	-	-	-	-
75	7	7	11	14	24	24	3	4	6	7	14	21	-	-	4	5	9	14	-	-	3	4	7	12	-	-	-	3	6	9	-	-	-	3	5	8	-	-	-	-	-	7	-	-	-	-	-	6	-	-	-	-	-	6	-	-	-	-	-	5	-	-	-	-	-	-	-	-	-	-	-	-	-	-	-	-	-	-	-	-	-	-	-	-	-	-	-	-	-	-	-	-	-	-	-	-	-	-	-	-
80	6	6	10	13	24	24	-	3	5	7	12	19	-	-	4	5	9	14	-	-	-	4	7	11	-	-	-	3	6	9	-	-	-	3	5	8	-	-	-	-	-	7	-	-	-	-	-	6	-	-	-	-	-	6	-	-	-	-	-	5	-	-	-	-	-	-	-	-	-	-	-	-	-	-	-	-	-	-	-	-	-	-	-	-	-	-	-	-	-	-	-	-	-	-	-	-	-	-	-	-
85	5	6	9	12	22	24	-	3	5	6	12	18	-	-	3	4	8	13	-	-	-	4	7	10	-	-	-	3	6	9	-	-	-	3	-	7	-	-	-	-	-	7	-	-	-	-	-	6	-	-	-	-	-	5	-	-	-	-	-	-	-	-	-	-	-	-	-	-	-	-	-	-	-	-	-	-	-	-	-	-	-	-	-	-	-	-	-	-	-	-	-	-	-	-	-	-	-	-	-	-	-	-
90	5	5	8	11	20	24	-	-	4	6	11	17	-	-	3	4	8	12	-	-	-	3	6	10	-	-	-	3	5	8	-	-	-	-	-	7	-	-	-	-	-	6	-	-	-	-	-	6	-	-	-	-	-	5	-	-	-	-	-	-	-	-	-	-	-	-	-	-	-	-	-	-	-	-	-	-	-	-	-	-	-	-	-	-	-	-	-	-	-	-	-	-	-	-	-	-	-	-	-	-	-	-
95	5	5	8	11	20	24	-	-	4	6	11	16	-	-	3	4	7	12	-	-	-	3	6	9	-	-	-	3	5	8	-	-	-	-	-	7	-	-	-	-	-	6	-	-	-	-	-	5	-	-	-	-	-	-	-	-	-	-	-	-	-	-	-	-	-	-	-	-	-	-	-	-	-	-	-	-	-	-	-	-	-	-	-	-	-	-	-	-	-	-	-	-	-	-	-	-	-	-	-	-	-	-
100	4	5	7	9	18	24	-	-	4	5	10	16	-	-	-	4	7	11	-	-	-	3	6	9	-	-	-	3	-	8	-	-	-	-	-	7	-	-	-	-	-	6	-	-	-	-	-	5	-	-	-	-	-	-	-	-	-	-	-	-	-	-	-	-	-	-	-	-	-	-	-	-	-	-	-	-	-	-	-	-	-	-	-	-	-	-	-	-	-	-	-	-	-	-	-	-	-	-	-	-	-	-
120	3	4	6	8	14	22	-	-	3	4	8	13	-	-	-	3	6	10	-	-	-	3	5	8	-	-	-	-	-	7	-	-	-	-	-	6	-	-	-	-	-	5	-	-	-	-	-	-	-	-	-	-	-	-	-	-	-	-	-	-	-	-	-	-	-	-	-	-	-	-	-	-	-	-	-	-	-	-	-	-	-	-	-	-	-	-	-	-	-	-	-	-	-	-	-	-	-	-	-	-	-	-
140	-	-	4	6	11	17	-	-	-	4	7	11	-	-	-	3	5	8	-	-	-	-	-	7	-	-	-	-	-	6	-	-	-	-	-	5	-	-	-	-	-	-	-	-	-	-	-	-	-	-	-	-	-	-	-	-	-	-	-	-	-	-	-	-	-	-	-	-	-	-	-	-	-	-	-	-	-	-	-	-	-	-	-	-	-	-	-	-	-	-	-	-	-	-	-	-	-	-	-	-	-	-
160	-	-	4	5	9	15	-	-	-	3	6	10	-	-	-	3	-	8	-	-	-	-	-	6	-	-	-	-	-	5	-	-	-	-	-	-	-	-	-	-	-	-	-	-	-	-	-	-	-	-	-	-	-	-	-	-	-	-	-	-	-	-	-	-	-	-	-	-	-	-	-	-	-	-	-	-	-	-	-	-	-	-	-	-	-	-	-	-	-	-	-	-	-	-	-	-	-	-	-	-	-	-
180	-	-	3	4	8	13	-	-	-	3	6	9	-	-	-	-	-	7	-	-	-	-	-	6	-	-	-	-	-	-	-	-	-	-	-	-	-	-	-	-	-	-	-	-	-	-	-	-	-	-	-	-	-	-	-	-	-	-	-	-	-	-	-	-	-	-	-	-	-	-	-	-	-	-	-	-	-	-	-	-	-	-	-	-	-	-	-	-	-	-	-	-	-	-	-	-	-	-	-	-	-	-
200	-	-	3	4	7	12	-	-	-	3	5	8	-	-	-	-	-	6	-	-	-	-	-	5	-	-	-	-	-	-	-	-	-	-	-	-	-	-	-	-	-	-	-	-	-	-	-	-	-	-	-	-	-	-	-	-	-	-	-	-	-	-	-	-	-	-	-	-	-	-	-	-	-	-	-	-	-	-	-	-	-	-	-	-	-	-	-	-	-	-	-	-	-	-	-	-	-	-	-	-	-	-
220	-	-	-	4	7	11	-	-	-	3	-	8	-	-	-	-	-	6	-	-	-	-	-	5	-	-	-	-	-	-	-	-	-	-	-	-	-	-	-	-	-	-	-	-	-	-	-	-	-	-	-	-	-	-	-	-	-	-	-	-	-	-	-	-	-	-	-	-	-	-	-	-	-	-	-	-	-	-	-	-	-	-	-	-	-	-	-	-	-	-	-	-	-	-	-	-	-	-	-	-	-	-
240	-	-	-	3	6	10	-	-	-	-	-	7	-	-	-	-	-	6	-	-	-	-	-	-	-	-	-	-	-	-	-	-	-	-	-	-	-	-	-	-	-	-	-	-	-	-	-	-	-	-	-	-	-	-	-	-	-	-	-	-	-	-	-	-	-	-	-	-	-	-	-	-	-	-	-	-	-	-	-	-	-	-	-	-	-	-	-	-	-	-	-	-	-	-	-	-	-	-	-	-	-	-
260	-	-	-	3	6	9	-	-	-	-	-	7	-	-	-	-	-	5	-	-	-	-	-	-	-	-	-	-	-	-	-	-	-	-	-	-	-	-	-	-	-	-	-	-	-	-	-	-	-	-	-	-	-	-	-	-	-	-	-	-	-	-	-	-	-	-	-	-	-	-	-	-	-	-	-	-	-	-	-	-	-	-	-	-	-	-	-	-	-	-	-	-	-	-	-	-	-	-	-	-	-	-
280	-	-	-	3	6	9	-	-	-	-	-	6	-	-	-	-	-	5	-	-	-	-	-	-	-	-	-	-	-	-	-	-	-	-	-	-	-	-	-	-	-	-	-	-	-	-	-	-	-	-	-	-	-	-	-	-	-	-	-	-	-	-	-	-	-	-	-	-	-	-	-	-	-	-	-	-	-	-	-	-	-	-	-	-	-	-	-	-	-	-	-	-	-	-	-	-	-	-	-	-	-	-

#	Fastener	Edge Distance	Min. Embedment	Substrate
A	1/4" Tapcon	1-1/2"	1-1/2"	Wood (fastener in center of stud)
B	1/4" Tapcon	3"	1-1/4"	CMU Hollow
C	1/4" Tapcon	3"	1-3/4"	4000 PSI Concrete or Cell Filled CMU
D	1/4" Wedge Bolt	4.25"	3"	4000 PSI Concrete or Cell Filled CMU
E	3/8" Wedge Bolt	4.25"	4.5"	4000 PSI Concrete or Cell Filled CMU
F	3/8" Wedge Bolt	5.25"	4.5"	4000 PSI Concrete or Cell Filled CMU

Roll·a·way By QMI
1661 GLENLAKE AVENUE
ITASCA, IL 60143

COPYRIGHT © 2008
QUALITAS MANUFACTURING INC.

DRAWING TITLE: NOTICE OF ACCEPTANCE
END RETENTION - TDI
PRODUCT APPROVAL

D.L. Fowler
Professional Engineer
Texas License No.
PE 102913

DRAWN: DLF	
DATE: 09-23-09	
APPROVED: DLF	
DATE: 09-23-09	
DRAWING NO: 3-01-035	
SIZE: B	REV: B
SCALE: 1 : 4	
SHEET: 11 OF 26	

FASTENER DRILLING O.C. (INCHES) SCHEDULE A3

PSF\SLAT SPAN	48"						60"						72"						84"						96"						108"						120"						132"						144"						156"						168"						180"						192"						204"						216"						228"						240"					
	Fastener						Fastener						Fastener						Fastener						Fastener						Fastener						Fastener						Fastener						Fastener						Fastener						Fastener						Fastener						Fastener						Fastener						Fastener						Fastener					
	A	B	C	D	E	F	A	B	C	D	E	F	A	B	C	D	E	F	A	B	C	D	E	F	A	B	C	D	E	F	A	B	C	D	E	F	A	B	C	D	E	F	A	B	C	D	E	F	A	B	C	D	E	F	A	B	C	D	E	F	A	B	C	D	E	F	A	B	C	D	E	F	A	B	C	D	E	F	A	B	C	D	E	F	A	B	C	D	E	F
10	24	24	24	24	24	24	24	24	24	24	24	24	24	24	24	24	24	24	24	24	24	24	24	24	11	24	21	24	24	24	8	10	15	20	24	24	7	8	12	16	24	24	5	6	10	13	22	24	5	5	9	11	19	24	4	5	7	10	17	24	4	4	7	9	15	22	3	4	6	8	14	20	3	3	6	7	12	18	-	3	5	7	11	16	-	3	5	6	10	15	-	-	4	6	10	14	-	-	4	5	9	13
15	24	24	24	24	24	24	24	24	24	24	24	24	23	24	24	24	24	24	10	11	18	23	24	24	7	8	12	16	24	24	5	6	10	13	21	24	4	5	8	10	17	24	4	4	7	9	15	21	3	4	6	8	13	19	3	3	5	7	11	17	3	3	5	6	10	15	-	3	4	6	9	14	-	-	4	5	9	13	-	-	4	5	8	12	-	-	3	4	7	11	-	-	3	4	7	10	-	-	3	4	6	9
20	24	24	24	24	24	24	24	24	24	24	24	24	12	13	21	24	24	24	7	8	12	16	24	24	5	5	9	11	19	24	4	4	7	9	16	23	3	4	6	8	13	19	3	3	5	7	11	17	-	3	4	6	10	15	-	3	4	5	9	13	-	-	4	5	8	12	-	-	3	4	7	11	-	-	3	4	7	10	-	-	3	4	6	9	-	-	-	3	6	8	-	-	-	3	5	8
25	24	24	24	24	24	24	24	24	24	24	24	24	8	9	14	18	24	24	5	6	9	12	20	24	4	4	7	9	16	23	3	4	6	7	12	18	3	3	5	6	11	16	-	3	4	5	9	13	-	-	4	5	8	12	-	-	3	4	7	11	-	-	3	4	7	10	-	-	3	4	6	9	-	-	3	3	6	8	-	-	-	3	5	8	-	-	-	3	-	7	-	-	-	3	-	6
30	24	24	24	24	24	24	13	15	23	24	24	24	6	7	11	14	24	24	4	5	7	9	16	24	3	4	6	8	13	19	3	3	5	6	11	15	-	3	4	5	9	13	-	-	4	5	8	11	-	-	3	4	7	10	-	-	3	4	6	9	-	-	3	3	6	8	-	-	-	3	5	8	-	-	-	3	-	7	-	-	-	3	-	7	-	-	-	-	-	6	-	-	-	-	-	6
35	24	24	24	24	24	24	11	12	20	25	24	24	5	5	9	11	19	24	3	4	6	8	14	20	3	3	5	7	11	16	-	3	4	5	9	13	-	-	4	5	8	11	-	-	3	4	7	10	-	-	3	4	6	9	-	-	3	3	6	8	-	-	-	3	5	7	-	-	-	3	-	7	-	-	-	3	-	6	-	-	-	-	-	6	-	-	-	-	-	5	-	-	-	-	-	5
40	24	24	24	24	24	24	8	9	14	18	24	24	4	5	7	10	16	24	3	3	6	7	12	18	-	3	4	6	10	14	-	-	4	5	8	12	-	-	3	4	7	10	-	-	3	4	6	9	-	-	-	3	6	8	-	-	-	3	5	7	-	-	-	3	-	7	-	-	-	3	-	6	-	-	-	-	-	6	-	-	-	-	-	5	-	-	-	-	-	5	-	-	-	-	-	-
45	24	24	24	24	24	24	6	7	12	15	24	24	4	4	7	9	15	22	3	3	5	6	11	16	-	-	4	5	9	13	-	-	3	4	7	11	-	-	3	4	6	9	-	-	3	3	6	8	-	-	-	3	5	7	-	-	-	3	-	7	-	-	-	-	-	6	-	-	-	-	-	6	-	-	-	-	-	5	-	-	-	-	-	5	-	-	-	-	-	-
50	21	23	24	24	24	24	5	6	10	12	21	24	3	4	6	8	13	19	-	3	4	6	10	14	-	-	4	5	8	12	-	-	3	4	7	10	-	-	3	3	6	8	-	-	-	3	5	8	-	-	-	3	-	7	-	-	-	-	-	6	-	-	-	-	-	6	-	-	-	-	-	5	-	-	-	-	-	-	-	-	-	-	-	-	-	-	-	-	-	-	-	-	-	-
55	18	20	24	24	24	24	5	5	9	11	19	24	3	3	5	7	12	18	-	-	4	5	9	13	-	-	3	4	7	10	-	-	3	4	6	9	-	-	-	3	5	8	-	-	-	3	-	7	-	-	-	3	-	6	-	-	-	-	-	6	-	-	-	-	-	5	-	-	-	-	-	-	-	-	-	-	-	-	-	-	-	-	-	-	-	-	-	-	-	-
60	10	11	18	24	24	24	4	5	8	10	17	24	3	3	5	6	11	16	-	-	4	5	8	12	-	-	3	4	7	10	-	-	3	3	6	8	-	-	-	3	5	7	-	-	-	3	-	7	-	-	-	-	-	6	-	-	-	-	-	5	-	-	-	-	-	5	-	-	-	-	-	-	-	-	-	-	-	-	-	-	-	-	-	-	-	-	-	-	-	-
65	9	10	16	21	24	24	4	4	7	9	15	22	-	3	4	6	10	14	-	-	3	4	8	11	-	-	3	4	6	9	-	-	-	3	5	8	-	-	-	3	-	7	-	-	-	-	-	6	-	-	-	-	-	6	-	-	-	-	-	5	-	-	-	-	-	-	-	-	-	-	-	-	-	-	-	-	-	-	-	-	-	-	-	-	-	-	-	-
70	8	9	15	19	24	24	3	4	6	8	14	20	-	3	4	5	9	13	-	-	3	4	7	10	-	-	3	3	6	9	-	-	-	3	5	7	-	-	-	3	-	6	-	-	-	-	-	6	-	-	-	-	-	5	-	-	-	-	-	-	-	-	-	-	-	-	-	-	-	-	-	-	-	-	-	-	-	-	-	-	-	-	-	-	-	-	-	-	-
75	6	7	11	14	24	24	3	4	6	7	13	18	-	-	4	5	9	12	-	-	3	4	7	10	-	-	3	3	6	8	-	-	-	3	-	7	-	-	-	-	-	6	-	-	-	-	-	6	-	-	-	-	-	5	-	-	-	-	-	-	-	-	-	-	-	-	-	-	-	-	-	-	-	-	-	-	-	-	-	-	-	-	-	-	-	-	-	-	-
80	6	6	10	13	23	24	3	3	5	7	11	17	-	-	4	5	8	12	-	-	3	4	6	9	-	-	-	3	5	8	-	-	-	3	-	7	-	-	-	-	-	6	-	-	-	-	-	5	-	-	-	-	-	-	-	-	-	-	-	-	-	-	-	-	-	-	-	-	-	-	-	-	-	-	-	-	-	-	-	-	-	-	-	-	-	-	-	-	-
85	5	6	9	12	21	24	3	3	5	6	11	15	-	-	3	4	8	11	-	-	3	4	6	9	-	-	-	3	5	7	-	-	-	3	-	6	-	-	-	-	-	6	-	-	-	-	-	5	-	-	-	-	-	-	-	-	-	-	-	-	-	-	-	-	-	-	-	-	-	-	-	-	-	-	-	-	-	-	-	-	-	-	-	-	-	-	-	-
90	5	5	8	11	18	24	-	3	4	6	10	15	-	-	3	4	7	11	-	-	3	3	6	8	-	-	-	3	-	7	-	-	-	-	-	6	-	-	-	-	-	5	-	-	-	-	-	-	-	-	-	-	-	-	-	-	-	-	-	-	-	-	-	-	-	-	-	-	-	-	-	-	-	-	-	-	-	-	-	-	-	-	-	-	-	-	-	-	-
95	5	5	8	11	19	24	-	3	4	6	10	14	-	-	3	4	7	10	-	-	-	3	6	8	-	-	-	3	-	7	-	-	-	-	-	6	-	-	-	-	-	5	-	-	-	-	-	-	-	-	-	-	-	-	-	-	-	-	-	-	-	-	-	-	-	-	-	-	-	-	-	-	-	-	-	-	-	-	-	-	-	-	-	-	-	-	-	-	-
100	4	5	7	9	16	23	-	-	4	5	9	13	-	-	3	4	7	10	-	-	-	3	5	8	-	-	-	3	-	6	-	-	-	-	-	6	-	-	-	-	-	5	-	-	-	-	-	-	-	-	-	-	-	-	-	-	-	-	-	-	-	-	-	-	-	-	-	-	-	-	-	-	-	-	-	-	-	-	-	-	-	-	-	-	-	-	-	-	-
120	3	4	6	8	13	19	-	-	3	4	7	11	-	-	3	3	6	8	-	-	-	3	-	7	-	-	-	-	-	6	-	-	-	-	-	-	-	-	-	-	-	-	-	-	-	-	-	-	-	-	-	-	-	-	-	-	-	-	-	-	-	-	-	-	-	-	-	-	-	-	-	-	-	-	-	-	-	-	-	-	-	-	-	-	-	-	-	-
140	-	3	5	6	10	15	-	-	3	4	7	10	-	-	-	3	-	7	-	-	-	-	-	6	-	-	-	-	-	5	-	-	-	-	-	-	-	-	-	-	-	-	-	-	-	-	-	-	-	-	-	-	-	-	-	-	-	-	-	-	-	-	-	-	-	-	-	-	-	-	-	-	-	-	-	-	-	-	-	-	-	-	-	-	-	-	-	-
160	-	-	4	5	9	13	-	-	3	3	6	8	-	-	-	3	-	7	-	-	-	-	-	5	-	-	-	-	-	-	-	-	-	-	-	-	-	-	-	-	-	-	-	-	-	-	-	-	-	-	-	-	-	-	-	-	-	-	-	-	-	-	-	-	-	-	-	-	-	-	-	-	-	-	-	-	-	-	-	-	-	-	-	-	-	-	-	-
180	-	-	3	4	8	11	-	-	-	3	5	8	-	-	-	-	-	6	-	-	-	-	-	-	-	-	-	-	-	-	-	-	-	-	-	-	-	-	-	-	-	-	-	-	-	-	-	-	-	-	-	-	-	-	-	-	-	-	-	-	-	-	-	-	-	-	-	-	-	-	-	-	-	-	-	-	-	-	-	-	-	-	-	-	-	-	-	-
200	-	-	3	4	7	10	-	-	-	3	-	7	-	-	-	-	-	5	-	-	-	-	-	-	-	-	-	-	-	-	-	-	-	-	-	-	-	-	-	-	-	-	-	-	-	-	-	-	-	-	-	-	-	-	-	-	-	-	-	-	-	-	-	-	-	-	-	-	-	-	-	-	-	-	-	-	-	-	-	-	-	-	-	-	-	-	-	-
220	-	-	-	4	6	9	-	-	-	3	-	7	-	-	-	-	-	5	-	-	-	-	-	-	-	-	-	-	-	-	-	-	-	-	-	-	-	-	-	-	-	-	-	-	-	-	-	-	-	-	-	-	-	-	-	-	-	-	-	-	-	-	-	-	-	-	-	-	-	-	-	-	-	-	-	-	-	-	-	-	-	-	-	-	-	-	-	-
240	-	-	-	3	6	8	-	-	-	-	-	6	-	-	-	-	-	-	-	-	-	-	-	-	-	-	-	-	-	-	-	-	-	-	-	-	-	-	-	-	-	-	-	-	-	-	-	-	-	-	-	-	-	-	-	-	-	-	-	-	-	-	-	-	-	-	-	-	-	-	-	-	-	-	-	-	-	-	-	-	-	-	-	-	-	-	-	-	-
260	-	-	-	3	6	8	-	-	-	-	-	6	-	-	-	-	-	-	-	-	-	-	-	-	-	-	-	-	-	-	-	-	-	-	-	-	-	-	-	-	-	-	-	-	-	-	-	-	-	-	-	-	-	-	-	-	-	-	-	-	-	-	-	-	-	-	-	-	-	-	-	-	-	-	-	-	-	-	-	-	-	-	-	-	-	-	-	-	-
280	-	-	-	3	5	7	-	-	-	-	-	5	-	-	-	-	-	-	-	-	-	-	-	-	-	-	-	-	-	-	-	-	-	-	-	-	-	-	-	-	-	-	-	-	-	-	-	-	-	-	-	-	-	-	-	-	-	-	-	-	-	-	-	-	-	-	-	-	-	-	-	-	-	-	-	-	-	-	-	-	-	-	-	-	-	-	-	-	-

#	Fastener	Edge Distance	Min. Embedment	Substrate
A	1/4" Tapcon	1-1/2"	1-1/2"	Wood (fastener in center of stud)
B	1/4" Tapcon	3"	1-1/4"	CMU Hollow
C	1/4" Tapcon	3"	1-3/4"	4000 PSI Concrete or Cell Filled CMU
D	1/4" Wedge Bolt	4.25"	3"	4000 PSI Concrete or Cell Filled CMU
E	3/8" Wedge Bolt	4.25"	4.5"	4000 PSI Concrete or Cell Filled CMU
F	3/8" Wedge Bolt	5.25"	4.5"	4000 PSI Concrete or Cell Filled CMU

Roll-a-way By OMI

1661 GLENLAKE AVENUE
ITASCA, IL 60143
COPYRIGHT © 2008
QUALITAS MANUFACTURING INC.

DRAWING TITLE:

NOTICE OF ACCEPTANCE
END RETENTION - TDI
PRODUCT APPROVAL

D.L. Fowler
Professional Engineer
Texas License No.
PE 102913

DRAWN:	DLF
DATE:	09-23-09
APPROVED:	DLF
DATE:	09-23-09
DRAWING NO:	3-01-035
SIZE: B	REV:
SCALE:	1 : 4
SHEET:	11A OF 26

SECTION "A-A" (4)

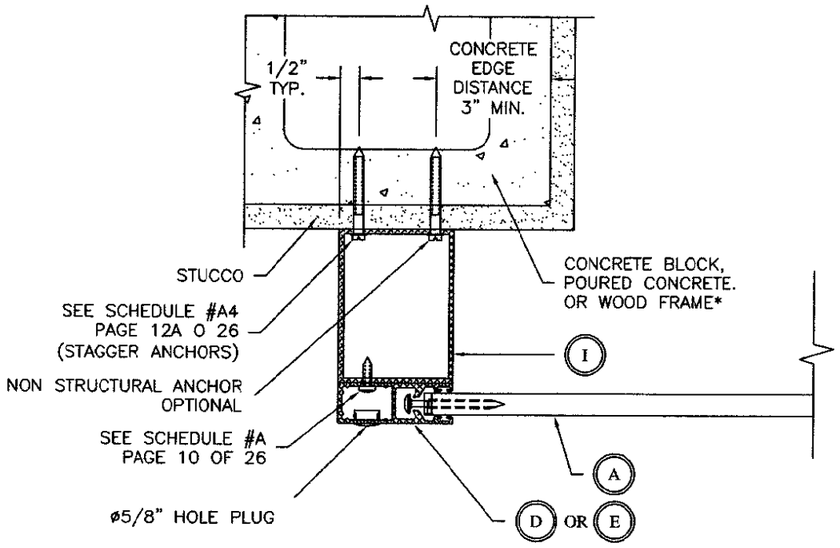

SECTION "A-A" (5)

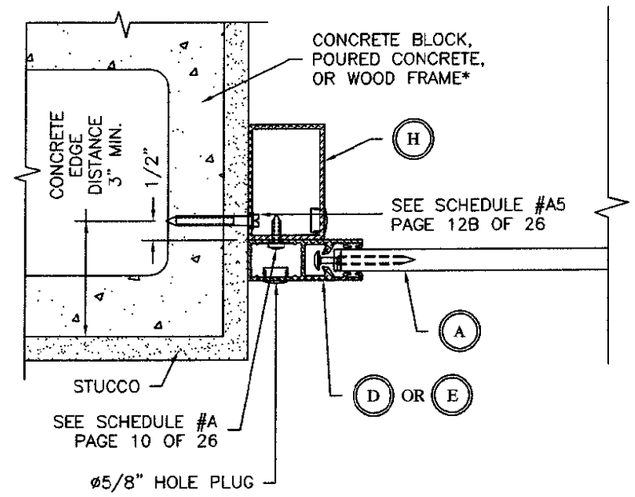

SECTION "A-A" (6)

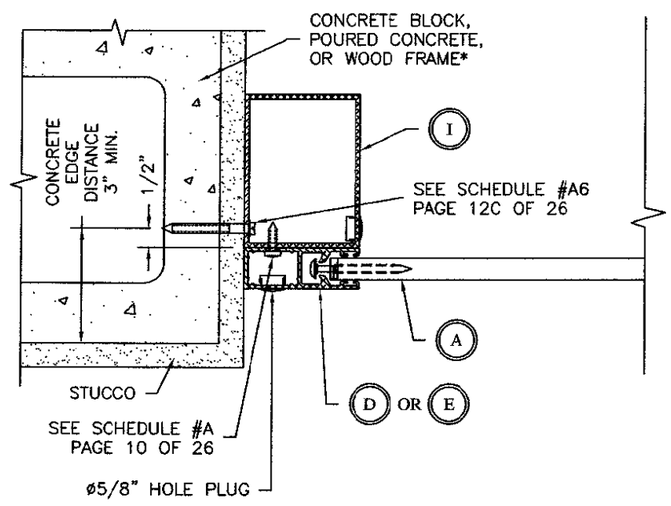

* WOOD SCREWS SHALL BE CENTERED IN 2" FACE OF STUD.

Roll-a-way By OMI
1661 GLENLAKE AVENUE
ITASCA, IL 60143
COPYRIGHT © 2008
QUALITAS MANUFACTURING INC.

DRAWING TITLE:
NOTICE OF ACCEPTANCE
END RETENTION - TDI
PRODUCT APPROVAL

D.L. Fowler
Professional Engineer
Texas License No.
PE 102913

DRAWN:	DLF
DATE:	04-26-04
APPROVED:	DLF
DATE:	09-24-09
DRAWING NO:	3-01-035
SIZE: B	REV: B
SCALE:	1 : 4
SHEET:	12 OF 26

FASTENER DRILLING O.C. (INCHES) SCHEDULE A4

PSF\SLAT SPAN	48"						60"						72"						84"						96"						108"					
	Fastener						Fastener						Fastener						Fastener						Fastener						Fasterer					
	A	B	C	D	E	F	A	B	C	D	E	F	A	B	C	D	E	F	A	B	C	D	E	F	A	B	C	D	E	F	A	B	C	D	E	F
10	24	24	24	24	24	24	24	24	24	24	24	24	24	24	24	24	24	24	20	18	24	24	24	24	9	9	14	20	24	24	7	6	10	14	24	24
15	24	24	24	24	24	24	24	24	24	24	24	24	19	17	24	24	24	24	8	7	12	16	24	24	5	5	8	12	24	24	4	4	6	9	18	24
20	24	24	24	24	24	24	24	24	24	24	24	24	9	9	14	20	24	24	5	5	8	11	23	24	4	4	6	8	16	22	3	-	5	6	13	18
25	24	24	24	24	24	24	20	19	24	24	24	24	6	6	9	13	24	24	4	4	6	8	17	23	3	-	5	6	13	18	-	-	4	5	11	14
30	24	24	24	24	24	24	10	10	15	22	24	24	5	4	7	10	20	24	3	3	5	7	14	18	-	-	4	5	11	15	-	-	3	4	9	12
35	24	24	24	24	24	24	9	8	13	18	24	24	4	4	6	8	17	22	-	-	4	6	12	16	-	-	3	5	9	13	-	-	-	4	8	10
40	24	24	24	24	24	24	6	6	9	13	24	24	3	3	5	7	14	19	-	-	4	5	11	14	-	-	-	4	8	11	-	-	-	3	7	9
45	24	24	24	24	24	24	5	5	8	11	22	24	-	-	4	6	13	17	-	-	3	5	9	12	-	-	-	4	7	10	-	-	-	3	6	8
50	17	15	24	24	24	24	4	4	6	9	18	24	-	-	4	5	11	15	-	-	-	4	8	11	-	-	-	3	7	9	-	-	-	-	6	8
55	14	13	21	24	24	24	4	4	6	8	16	22	-	-	3	5	10	14	-	-	-	4	8	10	-	-	-	3	6	8	-	-	-	-	5	7
60	8	7	12	17	24	24	3	3	5	7	15	19	-	-	3	4	9	12	-	-	-	3	7	9	-	-	-	-	6	8	-	-	-	-	-	6
65	7	7	11	15	24	24	-	-	4	6	13	17	-	-	-	4	8	11	-	-	-	3	7	9	-	-	-	-	5	7	-	-	-	-	-	6
70	7	6	10	14	24	24	-	-	4	6	12	16	-	-	-	4	8	10	-	-	-	-	6	8	-	-	-	-	5	7	-	-	-	-	-	6
75	5	5	7	10	21	24	-	-	4	5	11	14	-	-	-	4	7	10	-	-	-	-	6	8	-	-	-	-	-	6	-	-	-	-	-	5
80	5	4	7	9	20	24	-	-	3	5	10	13	-	-	-	3	7	9	-	-	-	-	5	7	-	-	-	-	-	6	-	-	-	-	-	5
85	4	4	6	9	18	23	-	-	3	4	9	12	-	-	-	3	5	9	-	-	-	-	5	7	-	-	-	-	-	6	-	-	-	-	-	-
90	4	3	5	8	16	21	-	-	-	4	9	11	-	-	-	3	6	8	-	-	-	-	-	7	-	-	-	-	-	5	-	-	-	-	-	-
95	4	3	5	8	16	21	-	-	-	4	8	11	-	-	-	-	6	8	-	-	-	-	-	6	-	-	-	-	-	5	-	-	-	-	-	-
100	3	-	5	7	14	18	-	-	-	4	8	10	-	-	-	-	6	8	-	-	-	-	-	5	-	-	-	-	-	5	-	-	-	-	-	-
120	-	-	4	5	11	15	-	-	-	3	6	8	-	-	-	-	-	6	-	-	-	-	-	5	-	-	-	-	-	-	-	-	-	-	-	-
140	-	-	-	4	9	11	-	-	-	-	6	8	-	-	-	-	-	6	-	-	-	-	-	-	-	-	-	-	-	-	-	-	-	-	-	-
160	-	-	-	4	7	10	-	-	-	-	-	7	-	-	-	-	-	5	-	-	-	-	-	-	-	-	-	-	-	-	-	-	-	-	-	-
180	-	-	-	3	6	9	-	-	-	-	-	6	-	-	-	-	-	-	-	-	-	-	-	-	-	-	-	-	-	-	-	-	-	-	-	-
200	-	-	-	-	6	8	-	-	-	-	-	5	-	-	-	-	-	-	-	-	-	-	-	-	-	-	-	-	-	-	-	-	-	-	-	-
220	-	-	-	-	5	7	-	-	-	-	-	5	-	-	-	-	-	-	-	-	-	-	-	-	-	-	-	-	-	-	-	-	-	-	-	-
240	-	-	-	-	5	7	-	-	-	-	-	-	-	-	-	-	-	-	-	-	-	-	-	-	-	-	-	-	-	-	-	-	-	-	-	-
260	-	-	-	-	-	6	-	-	-	-	-	-	-	-	-	-	-	-	-	-	-	-	-	-	-	-	-	-	-	-	-	-	-	-	-	-
280	-	-	-	-	-	6	-	-	-	-	-	-	-	-	-	-	-	-	-	-	-	-	-	-	-	-	-	-	-	-	-	-	-	-	-	-

PSF\SLAT SPAN	120"						132"						144"						156"						168"						180"						192"					
	Fastener						Fastener						Fastener						Fastener						Fastener						Fastener						Fastener					
	A	B	C	D	E	F	A	B	C	D	E	F	A	B	C	D	E	F	A	B	C	D	E	F	A	B	C	D	E	F	A	B	C	D	E	F	A	B	C	D	E	F
10	5	5	8	11	23	24	4	4	6	9	19	24	4	4	6	8	16	22	3	3	5	7	14	19	-	-	4	6	13	17	-	-	4	6	12	15	-	-	4	5	11	14
15	3	3	5	7	15	20	-	-	4	6	13	17	-	-	4	5	11	14	-	-	3	5	10	13	-	-	3	4	9	12	-	-	-	4	8	11	-	-	-	4	7	10
20	-	-	4	5	11	15	-	-	3	5	10	13	-	-	-	4	9	11	-	-	-	4	8	10	-	-	-	3	7	9	-	-	-	3	6	8	-	-	-	-	6	8
25	-	-	3	4	9	12	-	-	-	4	8	10	-	-	-	3	7	9	-	-	-	3	6	8	-	-	-	-	6	8	-	-	-	-	5	7	-	-	-	-	-	6
30	-	-	-	4	8	10	-	-	-	3	7	9	-	-	-	-	6	8	-	-	-	-	5	7	-	-	-	-	-	7	-	-	-	-	-	6	-	-	-	-	-	6
35	-	-	-	3	7	9	-	-	-	-	6	8	-	-	-	-	5	7	-	-	-	-	-	6	-	-	-	-	-	6	-	-	-	-	-	5	-	-	-	-	-	5
40	-	-	-	-	6	8	-	-	-	-	5	7	-	-	-	-	-	6	-	-	-	-	-	6	-	-	-	-	-	5	-	-	-	-	-	-	-	-	-	-	-	-
45	-	-	-	-	5	7	-	-	-	-	-	6	-	-	-	-	-	6	-	-	-	-	-	5	-	-	-	-	-	-	-	-	-	-	-	-	-	-	-	-	-	-
50	-	-	-	-	-	7	-	-	-	-	-	6	-	-	-	-	-	5	-	-	-	-	-	-	-	-	-	-	-	-	-	-	-	-	-	-	-	-	-	-	-	-
55	-	-	-	-	-	6	-	-	-	-	-	5	-	-	-	-	-	-	-	-	-	-	-	-	-	-	-	-	-	-	-	-	-	-	-	-	-	-	-	-	-	-
60	-	-	-	-	-	6	-	-	-	-	-	5	-	-	-	-	-	-	-	-	-	-	-	-	-	-	-	-	-	-	-	-	-	-	-	-	-	-	-	-	-	-
65	-	-	-	-	-	5	-	-	-	-	-	-	-	-	-	-	-	-	-	-	-	-	-	-	-	-	-	-	-	-	-	-	-	-	-	-	-	-	-	-	-	-
70	-	-	-	-	-	5	-	-	-	-	-	-	-	-	-	-	-	-	-	-	-	-	-	-	-	-	-	-	-	-	-	-	-	-	-	-	-	-	-	-	-	-
75	-	-	-	-	-	-	-	-	-	-	-	-	-	-	-	-	-	-	-	-	-	-	-	-	-	-	-	-	-	-	-	-	-	-	-	-	-	-	-	-	-	-
80	-	-	-	-	-	-	-	-	-	-	-	-	-	-	-	-	-	-	-	-	-	-	-	-	-	-	-	-	-	-	-	-	-	-	-	-	-	-	-	-	-	-
85	-	-	-	-	-	-	-	-	-	-	-	-	-	-	-	-	-	-	-	-	-	-	-	-	-	-	-	-	-	-	-	-	-	-	-	-	-	-	-	-	-	-
90	-	-	-	-	-	-	-	-	-	-	-	-	-	-	-	-	-	-	-	-	-	-	-	-	-	-	-	-	-	-	-	-	-	-	-	-	-	-	-	-	-	-
95	-	-	-	-	-	-	-	-	-	-	-	-	-	-	-	-	-	-	-	-	-	-	-	-	-	-	-	-	-	-	-	-	-	-	-	-	-	-	-	-	-	-
100	-	-	-	-	-	-	-	-	-	-	-	-	-	-	-	-	-	-	-	-	-	-	-	-	-	-	-	-	-	-	-	-	-	-	-	-	-	-	-	-	-	-
120	-	-	-	-	-	-	-	-	-	-	-	-	-	-	-	-	-	-	-	-	-	-	-	-	-	-	-	-	-	-	-	-	-	-	-	-	-	-	-	-	-	-
140	-	-	-	-	-	-	-	-	-	-	-	-	-	-	-	-	-	-	-	-	-	-	-	-	-	-	-	-	-	-	-	-	-	-	-	-	-	-	-	-	-	-
160	-	-	-	-	-	-	-	-	-	-	-	-	-	-	-	-	-	-	-	-	-	-	-	-	-	-	-	-	-	-	-	-	-	-	-	-	-	-	-	-	-	-
180	-	-	-	-	-	-	-	-	-	-	-	-	-	-	-	-	-	-	-	-	-	-	-	-	-	-	-	-	-	-	-	-	-	-	-	-	-	-	-	-	-	-
200	-	-	-	-	-	-	-	-	-	-	-	-	-	-	-	-	-	-	-	-	-	-	-	-	-	-	-	-	-	-	-	-	-	-	-	-	-	-	-	-	-	-
220	-	-	-	-	-	-	-	-	-	-	-	-	-	-	-	-	-	-	-	-	-	-	-	-	-	-	-	-	-	-	-	-	-	-	-	-	-	-	-	-	-	-
240	-	-	-	-	-	-	-	-	-	-	-	-	-	-	-	-	-	-	-	-	-	-	-	-	-	-	-	-	-	-	-	-	-	-	-	-	-	-	-	-	-	-
260	-	-	-	-	-	-	-	-	-	-	-	-	-	-	-	-	-	-	-	-	-	-	-	-	-	-	-	-	-	-	-	-	-	-	-	-	-	-	-	-	-	-
280	-	-	-	-	-	-	-	-	-	-	-	-	-	-	-	-	-	-	-	-	-	-	-	-	-	-	-	-	-	-	-	-	-	-	-	-	-	-	-	-	-	-

PSF\SLAT SPAN	204"						216"						228"						240"					
	Fastener						Fastener						Fastener						Fastener					
	A	B	C	D	E	F	A	B	C	D	E	F	A	B	C	D	E	F	A	B	C	D	E	F
10	-	-	3	5	10	13	-	-	3	4	9	12	-	-	-	4	8	11	-	-	-	4	8	10
15	-	-	-	3	7	9	-	-	-	3	6	8	-	-	-	-	6	8	-	-	-	-	6	7
20	-	-	-	-	5	7	-	-	-	-	5	7	-	-	-	-	-	6	-	-	-	-	-	6
25	-	-	-	-	-	6	-	-	-	-	-	6	-	-	-	-	-	5	-	-	-	-	-	5
30	-	-	-	-	-	5	-	-	-	-	-	-	-	-	-	-	-	-	-	-	-	-	-	-
35	-	-	-	-	-	-	-	-	-	-	-	-	-	-	-	-	-	-	-	-	-	-	-	-
40	-	-	-	-	-	-	-	-	-	-	-	-	-	-	-	-	-	-	-	-	-	-	-	-
45	-	-	-	-	-	-	-	-	-	-	-	-	-	-	-	-	-	-	-	-	-	-	-	-
50	-	-	-	-	-	-	-	-	-	-	-	-	-	-	-	-	-	-	-	-	-	-	-	-
55	-	-	-	-	-	-	-	-	-	-	-	-	-	-	-	-	-	-	-	-	-	-	-	-
60	-	-	-	-	-	-	-	-	-	-	-	-	-	-	-	-	-	-	-	-	-	-	-	-
65	-	-	-	-	-	-	-	-	-	-	-	-	-	-	-	-	-	-	-	-	-	-	-	-
70	-	-	-	-	-	-	-	-	-	-	-	-	-	-	-	-	-	-	-	-	-	-	-	-
75	-	-	-	-	-	-	-	-	-	-	-	-	-	-	-	-	-	-	-	-	-	-	-	-
80	-	-	-	-	-	-	-	-	-	-	-	-	-	-	-	-	-	-	-	-	-	-	-	-
85	-	-	-	-	-	-	-	-	-	-	-	-	-	-	-	-	-	-	-	-	-	-	-	-
90	-	-	-	-	-	-	-	-	-	-	-	-	-	-	-	-	-	-	-	-	-	-	-	-
95	-	-	-	-	-	-	-	-	-	-	-	-	-	-	-	-	-	-	-	-	-	-	-	-
100	-	-	-	-	-	-	-	-	-	-	-	-	-	-	-	-	-	-	-	-	-	-	-	-
120	-	-	-	-	-	-	-	-	-	-	-	-	-	-	-	-	-	-	-	-	-	-	-	-
140	-	-	-	-	-	-	-	-	-	-	-	-	-	-	-	-	-	-	-	-	-	-	-	-
160	-	-	-	-	-	-	-	-	-	-	-	-	-	-	-	-	-	-	-	-	-	-	-	-
180	-	-	-	-	-	-	-	-	-	-	-	-	-	-	-	-	-	-	-	-	-	-	-	-
200	-	-	-	-	-	-	-	-	-	-	-	-	-	-	-	-	-	-	-	-	-	-	-	-
220	-	-	-	-	-	-	-	-	-	-	-	-	-	-	-	-	-	-	-	-	-	-	-	-
240	-	-	-	-	-	-	-	-	-	-	-	-	-	-	-	-	-	-	-	-	-	-	-	-
260	-	-	-	-	-	-	-	-	-	-	-	-	-	-	-	-	-	-	-	-	-	-	-	-
280	-	-	-	-	-	-	-	-	-	-	-	-	-	-	-	-	-	-	-	-	-	-	-	-

#	Fastener	Edge Distance	Min. Embedment	Substrate
A	1/4" Tapcon	1-1/2"	1-1/2"	Wood (fastener in center of stud)
B	1/4" Tapcon	3"	1-1/4"	CMU Hollow
C	1/4" Tapcon	3"	1-3/4"	4000 PSI Concrete or Cell Filled CMU
D	1/4" Wedge Bolt	4.25"	3"	4000 PSI Concrete or Cell Filled CMU
E	3/8" Wedge Bolt	4.25"	4.5"	4000 PSI Concrete or Cell Filled CMU
F	3/8" Wedge Bolt	5.25"	4.5"	4000 PSI Concrete or Cell Filled CMU

Roll-a-way By QMI
1661 GLENLAKE AVENUE
ITASCA, IL 60143
COPYRIGHT © 2008
QUALITAS MANUFACTURING INC.

DRAWING TITLE:
NOTICE OF ACCEPTANCE
END RETENTION - TDI
PRODUCT APPROVAL

D.L. Fowler
Professional Engineer
Texas License No.
PE 102913

DRAWN:	DLF
DATE:	09-24-09
APPROVED:	DLF
DATE:	09-24-09
DRAWING NO:	3-01-035
SIZE: B	REV:
SCALE:	1 : 4
SHEET:	12A OF 26

FASTENER DRILLING O.C. (INCHES) SCHEDULE A5

PSF\SLAT SPAN	48"						60"						72"						84"					
	Fastener						Fastener						Fastener						Fastener					
	A	B	C	D	E	F	A	B	C	D	E	F	A	B	C	D	E	F	A	B	C	D	E	F
10	24	24	24	24	24	24	24	24	24	24	24	24	24	24	24	24	24	24	24	19	24	24	24	24
15	24	24	24	24	24	24	24	24	24	24	24	24	21	17	24	24	24	24	11	8	14	17	24	24
20	24	24	24	24	24	24	24	24	24	24	24	24	12	10	16	19	24	24	7	6	10	12	24	24
25	24	24	24	24	24	24	20	16	24	24	24	24	8	7	11	13	24	24	6	4	8	9	18	24
30	24	24	24	24	24	24	12	10	16	21	24	24	6	5	8	10	20	24	5	4	6	7	14	19
35	24	24	24	24	24	24	10	8	14	17	24	24	5	4	7	8	17	22	4	3	5	6	12	16
40	24	24	24	24	24	24	8	6	10	13	24	24	5	4	6	7	14	19	3	-	5	5	11	14
45	22	21	24	24	24	24	7	5	9	11	22	24	4	3	5	6	13	17	3	-	4	5	9	13
50	14	12	20	24	24	24	5	4	7	9	18	24	4	-	5	6	11	15	-	-	4	4	8	11
55	12	10	17	24	24	24	5	4	7	8	16	22	3	-	4	5	10	14	-	-	3	4	8	10
60	9	7	12	16	24	24	4	3	6	7	15	19	-	-	4	5	9	12	-	-	3	3	7	10
55	8	6	11	14	24	24	4	3	5	6	13	17	-	-	4	4	9	11	-	-	-	3	7	9
70	7	6	10	13	24	24	4	-	5	6	12	16	-	-	3	4	8	10	-	-	-	3	6	8
75	6	5	8	10	21	24	3	-	4	5	11	14	-	-	3	4	7	10	-	-	-	-	6	8
80	5	4	7	9	19	25	3	-	4	5	10	13	-	-	-	3	7	9	-	-	-	-	6	7
85	5	4	7	8	17	22	-	-	4	4	9	12	-	-	-	3	7	9	-	-	-	-	5	7
90	4	4	6	7	15	20	-	-	4	4	9	11	-	-	-	3	6	8	-	-	-	-	5	7
95	4	4	6	7	15	20	-	-	3	4	8	11	-	-	-	-	6	8	-	-	-	-	-	6
100	4	3	5	6	13	18	-	-	3	4	8	10	-	-	-	-	6	8	-	-	-	-	-	6
120	3	-	4	5	11	14	-	-	-	3	6	9	-	-	-	-	-	7	-	-	-	-	-	5
140	-	-	3	4	9	11	-	-	-	-	6	8	-	-	-	-	-	6	-	-	-	-	-	-
150	-	-	-	4	7	10	-	-	-	-	-	7	-	-	-	-	-	5	-	-	-	-	-	-
180	-	-	-	3	6	8	-	-	-	-	-	6	-	-	-	-	-	-	-	-	-	-	-	-
200	-	-	-	-	6	8	-	-	-	-	-	5	-	-	-	-	-	-	-	-	-	-	-	-
220	-	-	-	-	5	7	-	-	-	-	-	5	-	-	-	-	-	-	-	-	-	-	-	-
240	-	-	-	-	-	6	-	-	-	-	-	-	-	-	-	-	-	-	-	-	-	-	-	-
260	-	-	-	-	-	6	-	-	-	-	-	-	-	-	-	-	-	-	-	-	-	-	-	-
280	-	-	-	-	-	6	-	-	-	-	-	-	-	-	-	-	-	-	-	-	-	-	-	-

PSF\SLAT SPAN	96"						108"						120"						132"					
	Fastener						Fastener						Fastener						Fastener					
	A	B	C	D	E	F	A	B	C	D	E	F	A	B	C	D	E	F	A	B	C	D	E	F
10	13	10	17	20	24	24	10	8	13	14	24	24	8	6	10	12	24	24	6	5	9	9	19	24
15	8	6	10	12	24	24	6	5	8	9	19	24	5	4	7	7	15	20	4	3	6	6	13	17
20	5	4	7	8	17	23	4	3	6	7	14	18	4	-	5	6	11	15	3	-	4	5	10	13
25	4	3	6	7	14	18	4	-	5	5	11	15	3	-	4	5	9	13	-	-	4	4	8	11
30	4	-	5	6	11	15	3	-	4	5	9	12	-	-	3	4	8	11	-	-	3	3	7	9
35	3	-	4	5	10	13	-	-	4	4	8	11	-	-	3	3	7	9	-	-	-	3	6	8
40	-	-	4	4	8	11	-	-	3	3	7	9	-	-	-	3	6	8	-	-	-	-	5	7
45	-	-	3	4	8	10	-	-	-	3	6	9	-	-	-	-	6	7	-	-	-	-	-	7
50	-	-	3	3	7	9	-	-	-	-	6	8	-	-	-	-	5	7	-	-	-	-	-	6
55	-	-	-	3	6	8	-	-	-	-	5	7	-	-	-	-	-	6	-	-	-	-	-	6
60	-	-	-	-	6	8	-	-	-	-	5	7	-	-	-	-	-	6	-	-	-	-	-	5
55	-	-	-	-	5	7	-	-	-	-	-	6	-	-	-	-	-	6	-	-	-	-	-	-
70	-	-	-	-	5	7	-	-	-	-	-	6	-	-	-	-	-	5	-	-	-	-	-	-
75	-	-	-	-	-	7	-	-	-	-	-	6	-	-	-	-	-	5	-	-	-	-	-	-
80	-	-	-	-	-	6	-	-	-	-	-	5	-	-	-	-	-	-	-	-	-	-	-	-
85	-	-	-	-	-	6	-	-	-	-	-	5	-	-	-	-	-	-	-	-	-	-	-	-
90	-	-	-	-	-	6	-	-	-	-	-	-	-	-	-	-	-	-	-	-	-	-	-	-
95	-	-	-	-	-	5	-	-	-	-	-	-	-	-	-	-	-	-	-	-	-	-	-	-
100	-	-	-	-	-	5	-	-	-	-	-	-	-	-	-	-	-	-	-	-	-	-	-	-
120	-	-	-	-	-	-	-	-	-	-	-	-	-	-	-	-	-	-	-	-	-	-	-	-
140	-	-	-	-	-	-	-	-	-	-	-	-	-	-	-	-	-	-	-	-	-	-	-	-
150	-	-	-	-	-	-	-	-	-	-	-	-	-	-	-	-	-	-	-	-	-	-	-	-
180	-	-	-	-	-	-	-	-	-	-	-	-	-	-	-	-	-	-	-	-	-	-	-	-
200	-	-	-	-	-	-	-	-	-	-	-	-	-	-	-	-	-	-	-	-	-	-	-	-
220	-	-	-	-	-	-	-	-	-	-	-	-	-	-	-	-	-	-	-	-	-	-	-	-
240	-	-	-	-	-	-	-	-	-	-	-	-	-	-	-	-	-	-	-	-	-	-	-	-
260	-	-	-	-	-	-	-	-	-	-	-	-	-	-	-	-	-	-	-	-	-	-	-	-
280	-	-	-	-	-	-	-	-	-	-	-	-	-	-	-	-	-	-	-	-	-	-	-	-

PSF\SLAT SPAN	144"						156'						168"						180"					
	Fastener						Fastener						Fastener						Fastener					
	A	B	C	D	E	F	A	B	C	D	E	F	A	B	C	D	E	F	A	B	C	D	E	F
10	6	4	7	8	17	23	5	4	7	7	15	20	4	3	6	6	13	18	4	3	5	6	12	16
15	4	-	5	6	11	15	3	-	4	5	10	14	3	-	4	4	9	12	-	-	4	4	8	11
20	-	-	4	4	9	12	-	-	3	4	8	11	-	-	3	3	7	10	-	-	-	3	6	9
25	-	-	3	4	7	10	-	-	-	3	6	9	-	-	-	-	6	8	-	-	-	-	5	7
30	-	-	-	3	6	8	-	-	-	-	6	8	-	-	-	-	5	7	-	-	-	-	-	6
35	-	-	-	-	5	7	-	-	-	-	-	7	-	-	-	-	-	6	-	-	-	-	-	6
40	-	-	-	-	-	7	-	-	-	-	-	6	-	-	-	-	-	5	-	-	-	-	-	5
45	-	-	-	-	-	6	-	-	-	-	-	5	-	-	-	-	-	5	-	-	-	-	-	-
50	-	-	-	-	-	5	-	-	-	-	-	5	-	-	-	-	-	-	-	-	-	-	-	-
55	-	-	-	-	-	5	-	-	-	-	-	-	-	-	-	-	-	-	-	-	-	-	-	-
60	-	-	-	-	-	-	-	-	-	-	-	-	-	-	-	-	-	-	-	-	-	-	-	-
55	-	-	-	-	-	-	-	-	-	-	-	-	-	-	-	-	-	-	-	-	-	-	-	-
70	-	-	-	-	-	-	-	-	-	-	-	-	-	-	-	-	-	-	-	-	-	-	-	-
75	-	-	-	-	-	-	-	-	-	-	-	-	-	-	-	-	-	-	-	-	-	-	-	-
80	-	-	-	-	-	-	-	-	-	-	-	-	-	-	-	-	-	-	-	-	-	-	-	-
85	-	-	-	-	-	-	-	-	-	-	-	-	-	-	-	-	-	-	-	-	-	-	-	-
90	-	-	-	-	-	-	-	-	-	-	-	-	-	-	-	-	-	-	-	-	-	-	-	-
95	-	-	-	-	-	-	-	-	-	-	-	-	-	-	-	-	-	-	-	-	-	-	-	-
100	-	-	-	-	-	-	-	-	-	-	-	-	-	-	-	-	-	-	-	-	-	-	-	-
120	-	-	-	-	-	-	-	-	-	-	-	-	-	-	-	-	-	-	-	-	-	-	-	-
140	-	-	-	-	-	-	-	-	-	-	-	-	-	-	-	-	-	-	-	-	-	-	-	-
150	-	-	-	-	-	-	-	-	-	-	-	-	-	-	-	-	-	-	-	-	-	-	-	-
180	-	-	-	-	-	-	-	-	-	-	-	-	-	-	-	-	-	-	-	-	-	-	-	-
200	-	-	-	-	-	-	-	-	-	-	-	-	-	-	-	-	-	-	-	-	-	-	-	-
220	-	-	-	-	-	-	-	-	-	-	-	-	-	-	-	-	-	-	-	-	-	-	-	-
240	-	-	-	-	-	-	-	-	-	-	-	-	-	-	-	-	-	-	-	-	-	-	-	-
260	-	-	-	-	-	-	-	-	-	-	-	-	-	-	-	-	-	-	-	-	-	-	-	-
280	-	-	-	-	-	-	-	-	-	-	-	-	-	-	-	-	-	-	-	-	-	-	-	-

PSF\SLAT SPAN	192"						204"						216"						228"						240"					
	Fastener						Fastener						Fastener						Fastener						Fastener					
	A	B	C	D	E	F	A	B	C	D	E	F	A	B	C	D	E	F	A	B	C	D	E	F	A	B	C	D	E	F
10	4	-	5	5	11	15	3	-	5	5	10	14	3	-	4	5	9	13	-	-	4	4	9	12	-	-	4	4	8	11
15	-	-	3	4	8	10	-	-	3	3	7	10	-	-	-	3	7	9	-	-	-	3	6	8	-	-	-	-	6	8
20	-	-	-	-	6	8	-	-	-	-	6	7	-	-	-	-	5	7	-	-	-	-	-	7	-	-	-	-	-	6
25	-	-	-	-	5	7	-	-	-	-	-	5	-	-	-	-	-	6	-	-	-	-	-	6	-	-	-	-	-	5
30	-	-	-	-	-	6	-	-	-	-	-	5	-	-	-	-	-	5	-	-	-	-	-	-	-	-	-	-	-	-
35	-	-	-	-	-	5	-	-	-	-	-	-	-	-	-	-	-	-	-	-	-	-	-	-	-	-	-	-	-	-
40	-	-	-	-	-	-	-	-	-	-	-	-	-	-	-	-	-	-	-	-	-	-	-	-	-	-	-	-	-	-
45	-	-	-	-	-	-	-	-	-	-	-	-	-	-	-	-	-	-	-	-	-	-	-	-	-	-	-	-	-	-
50	-	-	-	-	-	-	-	-	-	-	-	-	-	-	-	-	-	-	-	-	-	-	-	-	-	-	-	-	-	-
55	-	-	-	-	-	-	-	-	-	-	-	-	-	-	-	-	-	-	-	-	-	-	-	-	-	-	-	-	-	-
60	-	-	-	-	-	-	-	-	-	-	-	-	-	-	-	-	-	-	-	-	-	-	-	-	-	-	-	-	-	-
55	-	-	-	-	-	-	-	-	-	-	-	-	-	-	-	-	-	-	-	-	-	-	-	-	-	-	-	-	-	-
70	-	-	-	-	-	-	-	-	-	-	-	-	-	-	-	-	-	-	-	-	-	-	-	-	-	-	-	-	-	-
75	-	-	-	-	-	-	-	-	-	-	-	-	-	-	-	-	-	-	-	-	-	-	-	-	-	-	-	-	-	-
80	-	-	-	-	-	-	-	-	-	-	-	-	-	-	-	-	-	-	-	-	-	-	-	-	-	-	-	-	-	-
85	-	-	-	-	-	-	-	-	-	-	-	-	-	-	-	-	-	-	-	-	-	-	-	-	-	-	-	-	-	-
90	-	-	-	-	-	-	-	-	-	-	-	-	-	-	-	-	-	-	-	-	-	-	-	-	-	-	-	-	-	-
95	-	-	-	-	-	-	-	-	-	-	-	-	-	-	-	-	-	-	-	-	-	-	-	-	-	-	-	-	-	-
100	-	-	-	-	-	-	-	-	-	-	-	-	-	-	-	-	-	-	-	-	-	-	-	-	-	-	-	-	-	-
120	-	-	-	-	-	-	-	-	-	-	-	-	-	-	-	-	-	-	-	-	-	-	-	-	-	-	-	-	-	-
140	-	-	-	-	-	-	-	-	-	-	-	-	-	-	-	-	-	-	-	-	-	-	-	-	-	-	-	-	-	-
150	-	-	-	-	-	-	-	-	-	-	-	-	-	-	-	-	-	-	-	-	-	-	-	-	-	-	-	-	-	-
180	-	-	-	-	-	-	-	-	-	-	-	-	-	-	-	-	-	-	-	-	-	-	-	-	-	-	-	-	-	-
200	-	-	-	-	-	-	-	-	-	-	-	-	-	-	-	-	-	-	-	-	-	-	-	-	-	-	-	-	-	-
220	-	-	-	-	-	-	-	-	-	-	-	-	-	-	-	-	-	-	-	-	-	-	-	-	-	-	-	-	-	-
240	-	-	-	-	-	-	-	-	-	-	-	-	-	-	-	-	-	-	-	-	-	-	-	-	-	-	-	-	-	-
260	-	-	-	-	-	-	-	-	-	-	-	-	-	-	-	-	-	-	-	-	-	-	-	-	-	-	-	-	-	-
280	-	-	-	-	-	-	-	-	-	-	-	-	-	-	-	-	-	-	-	-	-	-	-	-	-	-	-	-	-	-

#	Fastener	Edge Distance	Min. Embedment	Substrate
A	1/4" Tapcon	1-1/2"	1-1/2"	Wood (fastener in center of stud)
B	1/4" Tapcon	3"	1-1/4"	CMU Hollow
C	1/4" Tapcon	3"	1-3/4"	4000PSI Concrete or Cell Filled CMU
D	1/4" Wedge Bolt	4.25"	3"	4000PSI Concrete or Cell Filled CMU
E	3/8" Wedge Bolt	4.25"	4.5"	4000PSI Concrete or Cell Filled CMU
F	3/8" Wedge Bolt	5.25"	4.5"	4000PSI Concrete or Cell Filled CMU

Roll·a·way By AMI
1661 GLENLAKE AVENUE
ITASCA, IL 60143

COPYRIGHT © 2008
QUALITAS MANUFACTURING INC.

DRAWING TITLE:
NOTICE OF ACCEPTANCE
END RETENTION - TDI
PRODUCT APPROVAL

D.L. Fowler
Professional Engineer
Texas License No.
PE 102913

11-24-10

DRAWN:	DLF
DATE:	09-24-09
APPROVED:	DLF
DATE:	09-24-09
DRAWING NO:	3-01-035
SIZE: B	REV:
SCALE:	1 : 4
SHEET:	12B OF 26

FASTENER DRILLING O.C. (INCHES) SCHEDULE A6

PSF\SLAT SPAN	48"						60"						72"						84"					
	Fastener						Fastener						Fastener						Fastener					
	A	B	C	D	E	F	A	B	C	D	E	F	A	B	C	D	E	F	A	B	C	D	E	F
10	24	24	24	24	24	24	24	24	24	24	24	24	24	24	24	24	24	24	24	22	24	24	24	24
15	24	24	24	24	24	24	24	24	24	24	24	24	24	20	24	24	24	24	12	9	16	24	24	24
20	24	24	24	24	24	24	24	24	24	24	24	24	14	11	18	24	24	24	8	7	11	19	24	24
25	24	24	24	24	24	24	22	19	24	24	24	24	9	7	12	21	24	24	6	5	8	14	24	24
30	24	24	24	24	24	24	14	11	19	24	24	24	7	6	10	16	24	24	5	4	7	12	24	24
35	24	24	24	24	24	24	12	9	16	24	24	24	6	5	8	13	24	24	4	3	6	10	24	24
40	24	24	24	24	24	24	9	7	12	19	24	24	5	4	7	11	24	24	4	3	5	9	21	23
45	24	24	24	24	24	24	7	6	10	16	24	24	5	4	6	10	24	24	3	-	5	8	19	20
50	16	14	23	24	24	24	6	5	8	14	24	24	4	3	5	9	22	24	3	-	4	7	17	18
55	14	12	20	24	24	24	6	4	7	12	24	24	4	-	5	8	20	22	.	.	4	6	15	16
60	10	8	14	22	24	24	5	4	7	11	24	24	3	-	4	7	18	20	.	.	3	6	14	15
65	9	7	12	20	24	24	4	3	6	10	23	24	3	-	4	7	17	18	.	.	3	5	13	14
70	8	7	11	18	24	24	4	3	5	9	22	24	.	-	4	6	15	17	.	.	-	5	12	13
75	7	5	9	15	24	24	4	3	5	8	20	22	.	-	3	6	14	16	.	.	-	5	11	13
80	6	5	8	14	24	24	3	-	5	8	18	20	.	-	3	6	13	15	.	.	-	5	11	12
85	6	4	8	12	24	24	3	-	4	7	17	19	.	-	3	5	13	14	.	.	-	4	10	11
90	5	4	7	11	24	24	3	-	4	7	16	18	.	-	3	5	12	13	.	.	-	4	10	11
95	5	4	7	11	24	24	-	-	4	6	15	17	.	.	-	5	11	12	.	.	-	4	9	10
100	4	4	6	10	23	24	.	-	4	6	15	16	.	.	-	5	11	12	.	.	-	4	9	10
120	4	-	5	8	19	21	.	.	3	5	12	13	.	.	-	4	9	10	.	.	.	3	8	8
140	.	-	4	6	15	17	.	.	-	4	11	12	.	.	-	3	8	9	.	.	.	.	.	7
160	-	-	3	6	13	15	.	.	-	4	9	10	.	.	.	3	7	8	.	.	.	.	.	7
180	.	-	-	5	12	13	.	.	-	3	8	9	.	.	.	-	.	7	.	.	.	.	.	6
200	.	.	-	4	10	12	.	.	.	3	7	8	.	.	.	.	.	7	.	.	.	.	.	6
220	.	.	-	4	10	11	.	.	.	3	7	8	.	.	.	.	.	6	.	.	.	.	.	5
240	.	.	-	4	9	10	.	.	.	-	.	7	.	.	.	.	.	6	.	.	.	.	.	-
260	.	.	.	4	8	9	.	.	.	.	.	7	.	.	.	.	.	5	.	.	.	.	.	-
280	.	.	.	3	8	9	.	.	.	.	.	6	.	.	.	.	.	5	.	.	.	.	.	-

PSF\SLAT SPAN	96"						108"						120"						132"					
	Fastener						Fastener						Fastener						Fastener					
	A	B	C	D	E	F	A	B	C	D	E	F	A	B	C	D	E	F	A	B	C	D	E	F
10	14	11	19	24	24	24	11	8	14	24	24	24	9	7	12	20	24	24	7	6	9	16	24	24
15	9	7	12	20	24	24	7	5	9	16	24	24	6	4	7	13	24	24	5	4	6	11	24	24
20	6	5	8	14	24	24	5	4	7	11	24	24	4	3	6	10	23	24	4	-	5	8	20	22
25	5	4	7	11	24	24	4	3	5	9	22	24	3	-	5	8	19	20	.	-	4	7	16	18
30	4	3	5	9	23	24	3	-	5	8	19	20	.	-	4	7	16	17	.	-	3	6	14	15
35	4	-	5	8	19	21	.	-	4	7	16	17	.	-	3	6	14	15	.	-	3	5	12	13
40	3	-	4	7	17	18	.	-	3	6	14	15	.	-	3	5	12	13	.	-	-	5	11	12
45	.	-	4	6	15	16	.	-	3	5	13	14	.	-	-	5	11	12	.	.	-	4	10	11
50	.	-	3	6	14	15	.	-	-	5	12	13	.	.	-	4	10	11	.	.	-	4	9	10
55	.	-	3	5	12	14	.	.	-	4	11	12	.	.	-	4	9	10	.	.	-	3	8	9
60	.	-	-	5	12	13	.	.	-	4	10	11	.	.	-	4	9	9	.	.	-	3	8	9
65	.	.	-	5	11	12	.	.	-	4	9	10	.	.	.	3	8	9	.	.	.	3	7	8
70	.	.	-	4	10	11	.	.	-	4	9	10	.	.	.	3	8	8	.	.	.	.	.	8
75	.	.	-	4	10	10	.	.	.	3	8	9	.	.	.	3	7	8	.	.	.	.	.	7
80	.	.	-	4	9	10	.	.	.	3	8	9	.	.	.	.	7	8	.	.	.	.	.	7
85	.	.	-	4	9	9	.	.	.	3	7	8	.	.	.	.	.	7	.	.	.	.	.	6
90	.	.	.	3	8	9	.	.	.	3	7	8	.	.	.	.	.	7	.	.	.	.	.	6
95	.	.	.	3	8	9	.	.	.	.	.	7	.	.	.	.	.	7	.	.	.	.	.	6
100	.	.	.	3	8	8	.	.	.	.	.	7	.	.	.	.	.	6	.	.	.	.	.	6
120	.	.	.	.	.	7	.	.	.	.	.	6	.	.	.	.	.	6	.	.	.	.	.	5
140	.	.	.	.	.	6	.	.	.	.	.	5	.	.	.	.	.	-	.	.	.	.	.	-
160	.	.	.	.	.	6	.	.	.	.	.	5	.	.	.	.	.	-	.	.	.	.	.	.
180	.	.	.	.	.	5	.	.	.	.	.	-	.	.	.	.	.	.	.	.	.	.	.	.
200	.	.	.	.	.	-	.	.	.	.	.	.	.	.	.	.	.	.	.	.	.	.	.	.
220	.	.	.	.	.	-	.	.	.	.	.	.	.	.	.	.	.	.	.	.	.	.	.	.
240	.	.	.	.	.	-	.	.	.	.	.	.	.	.	.	.	.	.	.	.	.	.	.	.
260	.	.	.	.	.	.	.	.	.	.	.	.	.	.	.	.	.	.	.	.	.	.	.	.
280	.	.	.	.	.	.	.	.	.	.	.	.	.	.	.	.	.	.	.	.	.	.	.	.

PSF\SLAT SPAN	144"						156"						168"						180"					
	Fastener						Fastener						Fastener						Fastener					
	A	B	C	D	E	F	A	B	C	D	E	F	A	B	C	D	E	F	A	B	C	D	E	F
10	6	5	8	14	24	24	5	4	7	13	24	24	5	4	6	11	24	24	4	3	6	10	24	24
15	4	3	6	10	23	24	4	-	5	9	21	22	3	-	4	8	19	20	3	-	4	7	17	18
20	3	-	4	7	18	19	.	-	4	7	16	17	.	-	3	6	15	16	.	-	3	6	13	14
25	-	-	4	6	15	16	.	-	3	5	13	14	.	-	-	5	12	13	.	-	-	5	11	12
30	.	-	3	5	13	13	.	-	-	5	11	12	.	-	-	4	10	11	.	.	-	4	10	10
35	.	-	-	5	11	12	.	.	-	4	10	11	.	.	-	4	9	10	.	.	-	4	8	9
40	.	.	-	4	10	11	.	.	-	4	9	10	.	.	.	3	8	9	.	.	.	3	8	8
45	.	.	-	4	9	10	.	.	.	3	8	9	.	.	.	3	8	8	.	.	.	.	.	8
50	.	.	.	3	8	9	.	.	.	3	8	8	.	.	.	.	7	7	.	.	.	.	.	7
55	.	.	.	3	8	8	.	.	.	.	7	8	.	.	.	.	.	7	.	.	.	.	.	6
60	.	.	.	3	7	8	.	.	.	.	.	7	.	.	.	.	.	6	.	.	.	.	.	6
65	.	.	.	.	.	7	.	.	.	.	.	7	.	.	.	.	.	6	.	.	.	.	.	6
70	.	.	.	.	.	7	.	.	.	.	.	6	.	.	.	.	.	6	.	.	.	.	.	5
75	.	.	.	.	.	7	.	.	.	.	.	6	.	.	.	.	.	5	.	.	.	.	.	5
80	.	.	.	.	.	6	.	.	.	.	.	6	.	.	.	.	.	5	.	.	.	.	.	-
85	.	.	.	.	.	6	.	.	.	.	.	5	.	.	.	.	.	5	.	.	.	.	.	.
90	.	.	.	.	.	6	.	.	.	.	.	5	.	.	.	.	.	-	.	.	.	.	.	.
95	.	.	.	.	.	5	.	.	.	.	.	5	.	.	.	.	.	.	.	.	.	.	.	.
100	.	.	.	.	.	5	.	.	.	.	.	-	.	.	.	.	.	.	.	.	.	.	.	.
120	.	.	.	.	.	.	.	.	.	.	.	.	.	.	.	.	.	.	.	.	.	.	.	.
140	.	.	.	.	.	.	.	.	.	.	.	.	.	.	.	.	.	.	.	.	.	.	.	.
160	.	.	.	.	.	.	.	.	.	.	.	.	.	.	.	.	.	.	.	.	.	.	.	.
180	.	.	.	.	.	.	.	.	.	.	.	.	.	.	.	.	.	.	.	.	.	.	.	.
200	.	.	.	.	.	.	.	.	.	.	.	.	.	.	.	.	.	.	.	.	.	.	.	.
220	.	.	.	.	.	.	.	.	.	.	.	.	.	.	.	.	.	.	.	.	.	.	.	.
240	.	.	.	.	.	.	.	.	.	.	.	.	.	.	.	.	.	.	.	.	.	.	.	.
260	.	.	.	.	.	.	.	.	.	.	.	.	.	.	.	.	.	.	.	.	.	.	.	.
280	.	.	.	.	.	.	.	.	.	.	.	.	.	.	.	.	.	.	.	.	.	.	.	.

PSF\SLAT SPAN	192"						204"						216"						228"						240"					
	Fastener						Fastener						Fastener						Fastener						Fastener					
	A	B	C	D	E	F	A	B	C	D	E	F	A	B	C	D	E	F	A	B	C	D	E	F	A	B	C	D	E	F
10	4	3	5	9	23	24	4	-	5	9	21	22	3	-	5	8	19	21	3	-	4	7	18	19	.	-	4	7	17	18
15	.	-	4	7	16	17	.	-	4	6	15	16	.	-	3	6	14	15	.	-	3	5	13	14	.	-	-	5	12	13
20	.	-	3	5	12	13	.	-	-	5	12	12	.	-	-	4	11	12	.	.	-	4	10	11	.	-	-	4	10	10
25	.	-	-	4	10	11	.	.	-	4	10	10	.	.	-	4	9	10	.	.	-	4	9	9	.	.	.	3	8	9
30	.	.	-	4	9	10	.	.	.	3	8	9	.	.	.	3	8	8	.	.	.	3	7	8	.	.	.	.	.	7
35	.	.	.	3	8	8	.	.	.	3	7	8	.	.	.	.	.	7	.	.	.	.	.	7	.	.	.	.	.	7
40	.	.	.	.	.	8	.	.	.	.	.	7	.	.	.	.	.	7	.	.	.	.	.	6	.	.	.	.	.	6
45	.	.	.	.	.	7	.	.	.	.	.	7	.	.	.	.	.	6	.	.	.	.	.	6	.	.	.	.	.	5
50	.	.	.	.	.	6	.	.	.	.	.	6	.	.	.	.	.	6	.	.	.	.	.	5	.	.	.	.	.	5
55	.	.	.	.	.	6	.	.	.	.	.	6	.	.	.	.	.	5	.	.	.	.	.	5	.	.	.	.	.	.
60	.	.	.	.	.	6	.	.	.	.	.	5	.	.	.	.	.	5	.	.	.	.	.	.	.	.	.	.	.	.
65	.	.	.	.	.	5	.	.	.	.	.	5	.	.	.	.	.	.	.	.	.	.	.	.	.	.	.	.	.	.
70	.	.	.	.	.	5	.	.	.	.	.	.	.	.	.	.	.	.	.	.	.	.	.	.	.	.	.	.	.	.
75	.	.	.	.	.	.	.	.	.	.	.	.	.	.	.	.	.	.	.	.	.	.	.	.	.	.	.	.	.	.
80	.	.	.	.	.	.	.	.	.	.	.	.	.	.	.	.	.	.	.	.	.	.	.	.	.	.	.	.	.	.
85	.	.	.	.	.	.	.	.	.	.	.	.	.	.	.	.	.	.	.	.	.	.	.	.	.	.	.	.	.	.
90	.	.	.	.	.	.	.	.	.	.	.	.	.	.	.	.	.	.	.	.	.	.	.	.	.	.	.	.	.	.
95	.	.	.	.	.	.	.	.	.	.	.	.	.	.	.	.	.	.	.	.	.	.	.	.	.	.	.	.	.	.
100	.	.	.	.	.	.	.	.	.	.	.	.	.	.	.	.	.	.	.	.	.	.	.	.	.	.	.	.	.	.
120	.	.	.	.	.	.	.	.	.	.	.	.	.	.	.	.	.	.	.	.	.	.	.	.	.	.	.	.	.	.
140	.	.	.	.	.	.	.	.	.	.	.	.	.	.	.	.	.	.	.	.	.	.	.	.	.	.	.	.	.	.
160	.	.	.	.	.	.	.	.	.	.	.	.	.	.	.	.	.	.	.	.	.	.	.	.	.	.	.	.	.	.
180	.	.	.	.	.	.	.	.	.	.	.	.	.	.	.	.	.	.	.	.	.	.	.	.	.	.	.	.	.	.
200	.	.	.	.	.	.	.	.	.	.	.	.	.	.	.	.	.	.	.	.	.	.	.	.	.	.	.	.	.	.
220	.	.	.	.	.	.	.	.	.	.	.	.	.	.	.	.	.	.	.	.	.	.	.	.	.	.	.	.	.	.
240	.	.	.	.	.	.	.	.	.	.	.	.	.	.	.	.	.	.	.	.	.	.	.	.	.	.	.	.	.	.
260	.	.	.	.	.	.	.	.	.	.	.	.	.	.	.	.	.	.	.	.	.	.	.	.	.	.	.	.	.	.
280	.	.	.	.	.	.	.	.	.	.	.	.	.	.	.	.	.	.	.	.	.	.	.	.	.	.	.	.	.	.

#	Fastener	Edge Distance	Min. Embedment	Substrate
A	1/4" Tapcon	1-1/2"	1-1/2"	Wood (fastener in center of stud)
B	1/4" Tapcon	3"	1-1/4"	CMU Hollow
C	1/4" Tapcon	3"	1-3/4"	4000 PSI Concrete or Cell Filled CMU
D	1/4" Wedge Bolt	4.25"	3"	4000 PSI Concrete or Cell Filled CMU
E	3/8" Wedge Bolt	4.25"	4.5"	4000 PSI Concrete or Cell Filled CMU
F	3/8" Wedge Bolt	5.25"	4.5"	4000 PSI Concrete or Cell Filled CMU

Roll-a-way By QMI
1661 GLENLAKE AVENUE
ITASCA, IL 60143

COPYRIGHT © 2008
QUALITAS MANUFACTURING INC.

DRAWING TITLE:
NOTICE OF ACCEPTANCE
END RETENTION - TDI
PRODUCT APPROVAL

D.L. Fowler
Professional Engineer
Texas License No.
PE 102913
11-24-10

DRAWN:	DLF
DATE:	09-24-09
APPROVED:	DLF
DATE:	09-24-09
DRAWING NO:	3-01-035
SIZE: B	REV:
SCALE:	1 : 5
SHEET:	12C OF 26

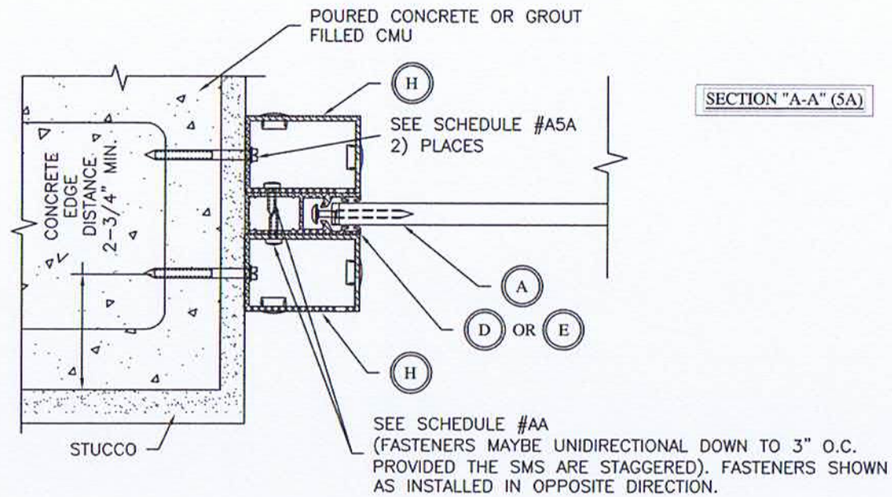

SECTION "A-A" (5A)

HOLE SPACING O.C. SCHEDULE # AA *

PSF\SLAT SPAN	36"	42"	48"	54"	60"	66"	72"	84	96	108	120	144	156	168	180	192	204	216	228	240
10	18	18	18	18	18	18	18	18	18	18	18	18	18	18	18	18	18	18	18	18
15	18	18	18	18	18	18	18	18	18	18	18	18	18	18	18	18	18	16	15	14
20	18	18	18	18	18	18	18	18	18	18	18	18	18	18	16	15	14	13	12	11
25	18	18	18	18	18	18	18	18	18	18	18	18	16	15	13	12	12	11	10	10
30	18	18	18	18	18	18	18	18	18	18	18	15	14	13	12	11	10	9	9	8
35	18	18	18	18	18	18	18	18	18	18	17	14	12	11	10	10	9	8	8	7
40	18	18	18	18	18	18	18	18	18	18	15	12	11	10	9	9	8	8	7	7
45	18	18	18	18	18	18	18	18	18	16	14	11	20	9	8	8	7	7	6	6
50	18	18	18	18	18	18	18	18	17	15	13	10	9	8	8	7	7	6	6	6
55	18	18	18	18	18	18	18	18	16	14	12	9	9	8	7	7	6	6	6	5
60	18	18	18	18	18	18	18	18	15	13	11	9	8	7	7	6	6	6	5	5
65	18	18	18	18	18	18	18	17	14	12	10	8	7	7	6	6	6	5	5	5
70	18	18	18	18	18	18	18	15	13	11	10	8	7	7	6	6	5	5	5	4
75	18	18	18	18	18	18	18	15	12	10	9	7	7	6	6	5	5	5	4	4
80	18	18	18	18	18	18	18	14	11	10	9	7	6	6	5	5	5	5	4	4
85	18	18	18	18	18	18	17	13	11	9	8	7	6	6	5	5	5	4	4	4
90	18	18	18	18	18	18	16	12	10	9	8	6	6	5	5	5	4	4	4	3
95	18	18	18	18	18	17	15	12	10	9	8	6	6	5	5	5	4	4	3	3
100	18	18	18	18	18	16	14	11	10	8	7	6	5	5	5	4	4	3	3	3
120	18	18	18	18	16	14	12	10	8	7	6	5	5	4	4	4	3	3	3	3
140	18	18	18	17	14	12	10	9	7	6	6	5	4	4	3	3	3	3	2.5	2.5
160	18	18	18	14	12	11	9	8	7	6	5	4	4	3	3	3	3	2.5	2.5	2
180	18	18	17	13	11	10	9	7	6	5	5	4	4	3	3	3	2.5	2.5	2	2
200	18	18	15	12	10	9	8	7	6	5	4	4	3	3	3	2.5	2.5	2	2	2
220	18	17	13	11	9	8	7	6	5	5	4	3	3	3	2.5	2.5	2	2	2	2
240	18	16	12	10	9	8	7	6	5	4	4	3	3	2.5	2.5	2	2	2	2	1.5
260	18	15	11	9	8	7	6	5	5	4	3	3	2.5	2.5	2	2	2	2	1.5	1.5
280	18	14	11	9	8	7	6	5	4	4	3	2.5	2.5	2.5	2	2	2	1.5	1.5	1.5

*1/8" ALUM 6063-T6 ALLOY, #14 X 3/4" SS SMS

HOLE SPACING O.C. SCHEDULE # A5A *

PSF\SLAT SPAN	36"	42"	48"	54"	60"	66"	72"	84	96	108	120	144	156	168	180	192	204	216	228	240
10	18	18	18	18	18	18	18	18	18	18	16	12	10	9	8	7	7	6	6	6
15	18	18	18	18	18	18	18	18	17	13	10	8	7	6	6	5	5	4	4	4
20	18	18	18	18	18	18	18	16	12	9	8	6	5	5	4	4	4	3	3	3
25	18	18	18	18	18	18	18	12	9	7	6	5	4	4	4	3	3	3	3	3
30	18	18	18	18	18	18	15	10	8	6	5	4	4	3	3	2.5	2.5	2.5	4	4
35	18	18	18	18	18	15	12	8	6	5	5	4	3	3	2.5	2.5	4	4	4	4
40	18	18	18	18	16	12	10	7	6	5	4	3	3	2.5	5	4	4	4	3	3
45	18	18	18	18	14	10	8	6	5	4	4	3	2.5	5	4	4	3	3	3	3
50	18	18	18	18	11	9	7	6	5	4	3	2.5	4	4	4	3	3	3	3	3
55	18	18	18	14	10	8	7	5	4	4	3	4	4	4	3	3	3	3	2.5	2.5
60	18	18	18	12	9	7	6	5	4	3	2.5	4	4	3	3	3	3	2.5	2.5	2.5
65	18	18	18	11	8	7	6	4	4	3	2.5	4	3	3	3	3	2.5	2.5	2.5	N/A
70	18	18	16	10	8	6	5	4	3	2.5	2.5	4	3	3	3	2.5	2.5	2.5	N/A	N/A
75	18	18	14	9	7	6	5	4	3	2.5	4	3	3	3	3	2.5	2.5	N/A	N/A	N/A
80	18	18	13	8	6	5	5	4	3	2.5	4	3	3	3	2.5	2.5	N/A	N/A	N/A	N/A
85	18	18	12	8	6	5	4	3	2.5	4	4	3	3	3	2.5	2.5	N/A	N/A	N/A	N/A
90	18	18	10	7	6	5	4	3	2.5	4	4	3	3	2.5	2.5	N/A	N/A	N/A	N/A	N/A
95	18	18	9	7	5	4	4	3	2.5	4	3	3	2.5	2.5	2.5	N/A	N/A	N/A	N/A	N/A
100	18	14	9	6	5	4	4	2.5	2.5	4	3	3	2.5	2.5	N/A	N/A	N/A	N/A	N/A	N/A
120	18	10	7	5	4	4	3	2.5	4	3	3	2.5	N/A	N/A	N/A	N/A	N/A	N/A	N/A	N/A
140	18	8	5	4	4	3	2.5	4	3	3	2.5	N/A	N/A	N/A	N/A	N/A	N/A	N/A	N/A	N/A
160	14	7	5	4	3	2.5	4	3	3	2.5	2.5	N/A	N/A	N/A	N/A	N/A	N/A	N/A	N/A	N/A
180	10	6	4	3	2.5	4	4	3	3	2.5	N/A	N/A	N/A	N/A	N/A	N/A	N/A	N/A	N/A	N/A
200	8	5	4	3	2.5	4	3	3	2.5	N/A	N/A	N/A	N/A	N/A	N/A	N/A	N/A	N/A	N/A	N/A
220	7	4	3	2.5	4	4	3	3	2.5	N/A	N/A	N/A	N/A	N/A	N/A	N/A	N/A	N/A	N/A	N/A
240	6	4	3	2.5	4	3	3	2.5	N/A	N/A	N/A	N/A	N/A	N/A	N/A	N/A	N/A	N/A	N/A	N/A
260	5	4	2.5	4	3	3	3	2.5	N/A	N/A	N/A	N/A	N/A	N/A	N/A	N/A	N/A	N/A	N/A	N/A
280	5	4	2.5	4	3	3	2.5	N/A	N/A	N/A	N/A	N/A	N/A	N/A	N/A	N/A	N/A	N/A	N/A	N/A

3320 PSI CONCRETE OR CELL FILLED CMU, 1/4" DIA. TAPCON, 2" EMBEDMENT, 3" EDGE DISTANCE

HIGHLIGHTED AREA CONCRETE OR CELL FILLED CMU, 1/4" DIA. WEDGE BOLT 3" EMBEDMENT, 2.75" EDGE DISTANCE

Roll-a-way By QMI
1661 GLENLAKE AVENUE
ITASCA, IL 60143
COPYRIGHT © 2008
QUALITAS MANUFACTURING INC.

DRAWING TITLE:

NOTICE OF ACCEPTANCE END RETENTION - TDI PRODUCT APPROVAL

D.L. Fowler
Professional Engineer
Texas License No.
PE 102913

10-24-10

DRAWN:	DLF
DATE:	09-24-09
APPROVED:	DLF
DATE:	09-24-09
DRAWING NO:	3-01-035
SIZE: B	REV:
SCALE:	1 : 4
SHEET:	12D OF 26

SECTION "A-A" (7)

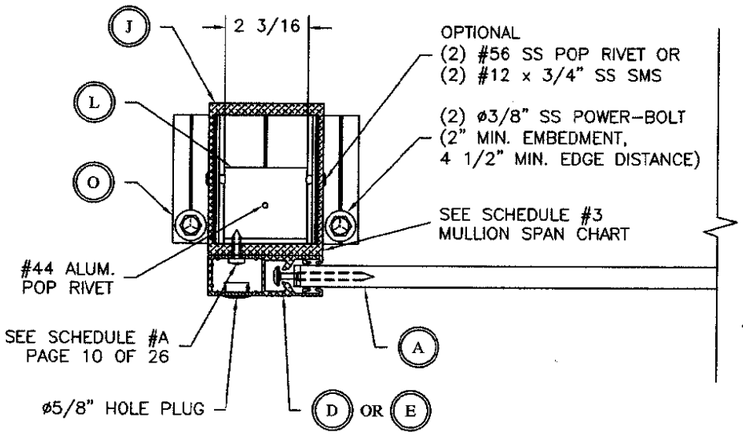

SECTION "A-A" (8)

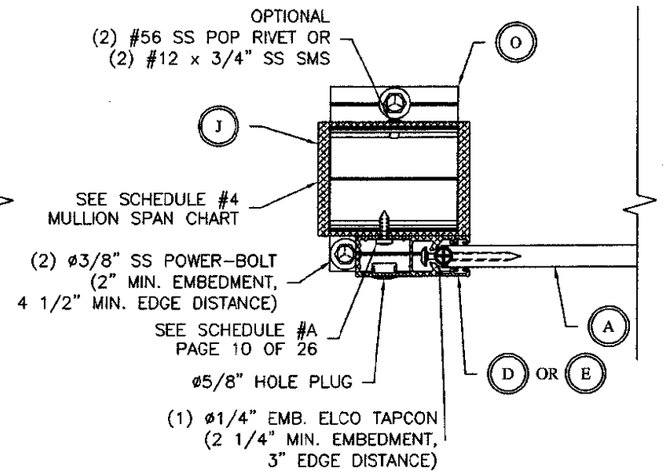

SECTION "A-A" (9)

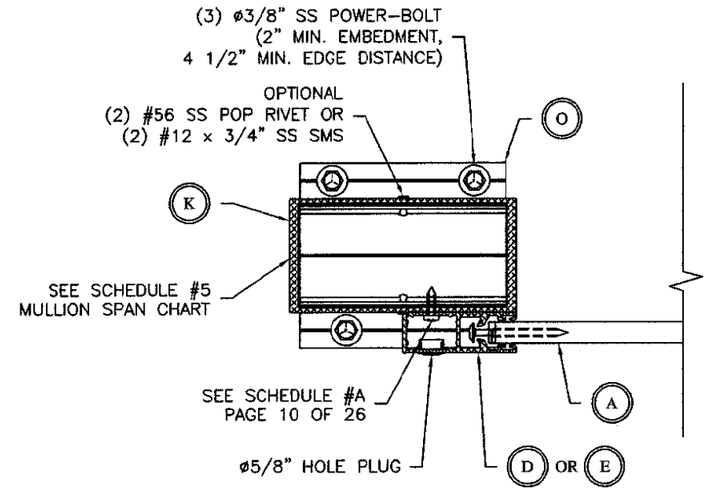

NOTE: MAXIMUM GAP BETWEEN CUT END OF POST AND POST BASE IS 1/4"

SCHEDULE # 3

A-A (7) MULLION MAXIMUM HEIGHT (IN)

PSF	SLAT SPAN (IN) - CLEAR SPAN (NO STORM BARS) - SEE PAGE 8															
	48	54	60	66	72	78	84	90	96	108	120	132	144	156	168	180
10	240.0	240.0	240.0	240.0	240.0	219.6	175.1	153.1	139.1	124.1	116.0	106.3	97.7	91.0	85.5	80.8
15	240.0	240.0	219.1	191.9	174.9	150.0	135.0	124.4	117.0	103.4	93.2	84.4	78.4	73.4	69.3	65.8
20	240.0	214.0	173.0	152.0	139.0	126.1	117.0	107.4	98.5	87.1	78.7	72.5	67.5	63.4	59.9	56.9
25	240.0	192.0	145.0	133.0	122.1	112.4	101.9	92.9	86.5	76.7	69.8	64.5	60.2	56.6	53.6	50.1
30	240.0	175.0	134.0	122.0	108.5	99.0	89.8	83.0	77.2	69.3	63.3	58.7	54.8	51.3	46.2	42.0
35	240.0	160.0	125.0	111.8	99.0	88.5	81.2	75.7	71.0	63.6	58.4	54.2	49.5	44.1	39.8	36.1
40	240.0	150.0	120.0	103.3	90.4	82.0	74.6	70.0	65.6	59.5	54.4	49.4	43.5	38.8	35.0	31.9
45	193.0	134.0	111.0	93.8	82.9	75.7	70.2	65.5	61.6	55.8	50.7	43.9	38.3	34.6	31.2	28.5
50	155.5	121.0	100.7	87.0	77.8	70.7	65.8	61.7	58.3	52.9	45.6	39.5	34.9	31.3	28.3	25.8
60	136.0	110.8	88.2	77.4	69.0	63.6	59.5	55.7	52.7	44.5	38.0	33.1	29.3	26.3	23.8	21.8
70	121.0	93.2	79.2	69.5	63.1	58.3	54.3	51.0	45.6	38.1	32.6	28.5	25.3	22.7	20.7	18.9
80	108.8	83.9	72.5	63.7	58.5	54.1	49.3	44.0	39.8	33.3	28.5	25.0	22.3	20.1	18.3	16.8
90	95.2	76.9	66.2	59.7	54.7	49.5	43.5	39.0	35.2	29.6	25.5	22.4	20.0	18.0	16.4	15.1
100	87.1	71.4	62.1	55.9	50.5	44.1	38.9	35.1	31.8	26.7	23.0	20.3	18.1	16.4	14.9	13.8
110	80.7	66.9	58.7	53.1	45.6	39.8	35.5	31.8	28.8	24.3	21.0	18.5	16.6	15.0	13.7	12.6
120	75.6	62.2	55.2	48.7	41.5	36.5	32.3	29.1	26.4	22.3	19.3	17.1	15.3	13.9	12.7	11.7
130	69.6	59.2	52.7	44.2	38.1	33.5	29.7	26.8	24.4	20.7	17.9	15.9	14.2	12.9	11.8	10.9
140	66.2	56.6	49.2	41.0	35.1	30.9	27.6	25.0	22.7	19.3	16.7	14.8	13.3	12.1	11.1	10.3

SCHEDULE # 4

A-A(8) MULLION MAXIMUM HEIGHT (IN)

PSF	SLAT SPAN (IN) - CLEAR SPAN (NO STORM BARS) - SEE PAGE 8															
	48.0	54.0	60.0	66.0	72.0	78.0	84.0	90.0	96.0	108.0	120.0	132.0	144.0	156	168	180
10.0	240.0	240.0	240.0	240.0	240.0	240.0	216.4	191.5	174.7	140.0	123.4	111.2	102.3	95.3	89.6	84.8
15.0	240.0	240.0	240.0	222.4	194.8	173.2	161.4	137.2	125.3	108.0	97.4	88.4	82.1	77.0	72.7	69.0
20.0	240.0	240.0	201.9	183.3	168.8	145.3	125.4	112.0	102.8	91.1	82.4	75.9	70.7	66.5	62.8	59.7
25.0	240.0	222.6	185.5	156.5	135.5	118.9	106.1	96.9	90.3	80.2	73.1	67.6	63.1	59.3	56.2	53.5
30.0	240.0	205.4	169.1	140.0	118.8	103.0	93.6	86.6	80.7	72.4	66.3	61.5	57.4	54.1	50.0	45.3
35.0	235.7	193.7	153.0	120.3	104.3	92.2	84.7	79.0	74.2	66.6	61.1	56.7	53.2	47.7	43.0	39.0
40.0	222.2	184.0	132.7	107.1	94.0	85.4	77.9	73.1	68.5	62.2	57.0	53.1	47.1	42.0	37.9	34.4
45.0	202.7	163.3	118.7	97.4	86.3	78.9	73.2	68.4	64.4	58.4	53.7	47.6	42.0	37.5	33.8	30.8
50.0	180.7	140.2	108.4	92.0	81.5	73.7	68.7	64.4	61.0	55.4	49.6	42.8	37.8	33.9	30.6	27.9
60.0	160.8	114.9	91.4	80.5	71.9	66.4	62.1	58.2	55.1	48.4	41.3	35.9	31.8	28.4	25.8	23.6
70.0	133.8	96.4	82.2	72.4	65.8	60.8	56.8	53.8	49.7	41.5	35.3	30.9	27.4	24.6	22.4	20.5
80.0	114.9	86.9	75.3	66.3	61.0	56.5	52.9	48.0	43.3	36.3	31.0	27.1	24.1	21.8	19.8	18.2
90.0	98.0	79.7	68.8	62.2	57.1	52.9	47.5	42.6	38.3	32.2	27.7	24.3	21.6	19.5	17.8	16.3
100.0	89.8	74.1	64.6	58.2	53.5	48.2	42.5	38.2	34.6	29.0	25.0	22.0	19.6	17.7	16.2	14.9
110.0	83.3	69.5	61.1	55.4	49.9	43.5	38.7	34.7	31.3	26.4	22.8	20.1	18.0	16.3	14.9	13.7
120.0	78.1	64.6	57.5	52.5	45.4	39.9	35.3	31.7	28.8	24.3	21.0	18.5	16.6	15.0	13.8	12.7
130.0	72.1	61.5	54.9	48.5	41.7	36.6	32.4	29.2	26.6	22.5	19.5	17.2	15.4	14.0	12.8	11.8
140.0	68.6	58.8	52.7	45.0	38.5	33.8	30.2	27.2	24.7	20.9	18.2	16.1	14.4	13.1	12.0	11.1

SCHEDULE # 5

A-A(9) MULLION MAXIMUM HEIGHT (IN)

PSF	SLAT SPAN (IN) - CLEAR SPAN (NO STORM BARS) - SEE PAGE 8															
	48.0	54.0	60.0	66.0	72.0	78.0	84.0	90.0	96.0	108.0	120.0	132.0	144.0	156	168	180
10.0	240.0	240.0	240.0	240.0	240.0	240.0	240.0	240.0	221.6	190.9	172.8	156.7	144.3	134.9	128.8	121.4
15.0	240.0	240.0	240.0	240.0	240.0	224.8	204.5	184.0	172.0	153.1	138.6	128.0	119.4	112.8	107.7	101.8
20.0	240.0	240.0	240.0	224.0	204.4	183.8	166.7	153.7	143.9	130.3	119.0	111.1	104.2	99.0	94.1	89.8
25.0	240.0	240.0	224.0	197.2	171.3	156.6	144.3	134.7	127.3	115.3	106.4	99.3	93.4	88.3	84.2	80.4
30.0	240.0	224.0	197.4	169.9	153.0	138.7	129.0	121.3	114.5	104.5	96.7	90.4	85.1	80.7	74.8	67.8
35.0	231.6	218.8	174.0	151.5	137.5	125.8	117.7	111.2	105.6	96.3	89.3	83.5	78.8	71.4	64.4	58.4
40.0	225.4	196.0	163.7	143.6	131.0	121.7	113.3	107.5	101.9	93.6	86.7	80.1	70.5	62.8	56.7	51.5
45.0	211.8	179.1	150.0	132.3	121.1	112.9	106.3	100.4	95.5	87.7	81.5	71.2	62.8	56.1	50.5	46.2
50.0	199.6	160.4	136.7	124.4	113.8	105.4	99.4	94.2	89.8	82.6	74.1	64.0	56.6	50.7	45.8	41.8
60.0	162.1	135.8	118.0	107.5	98.8	92.6	87.6	83.0	79.2	72.4	61.7	53.7	47.5	42.5	38.6	35.3
70.0	142.9	119.8	107.5	97.9	90.8	85.2	80.4	76.7	73.2	62.0	52.9	46.2	41.0	36.8	33.5	30.7
80.0	129.3	110.0	99.3	90.4	84.5	79.3	75.0	71.4	64.7	54.2	46.4	40.6	36.1	32.6	29.6	27.2
90.0	116.6	102.2	92.0	85.0	79.3	74.5	70.5	63.6	57.3	48.1	41.4	36.4	32.4	29.2	26.6	24.5
100.0	108.8	95.8	86.7	80.0	74.6	70.4	63.4	57.1	51.7	43.4	37.4	32.9	29.4	26.5	24.2	22.3
110.0	102.4	90.6	82.3	76.1	71.0	64.9	57.8	51.8	46.8	39.5	34.1	30.1	26.9	24.3	22.2	20.5
120.0	100.9	88.8	81.1	75.3	67.7	59.6	52.7	47.4	43.0	36.3	31.4	27.7	24.8	22.5	20.6	19.0
130.0	94.6	84.5	77.4	71.8	62.1	54.6	48.4	43.6	39.7	33.6	29.2	25.8	23.1	20.9	19.2	17.7
140.0	90.0	80.5	73.9	67.0	57.4	50.4	45.1	40.6	36.9	31.3	27.2	24.1	21.6	19.6	18.0	16.6

Roll-a-way By QMI
1661 GLENLAKE AVENUE
ITASCA, IL 60143

COPYRIGHT © 2008
QUALITAS MANUFACTURING INC.

DRAWING TITLE:
NOTICE OF ACCEPTANCE
END RETENTION - TDI
PRODUCT APPROVAL

D.L. Fowler
Professional Engineer
Texas License No.
PE 102913
11-24-09

DRAWN:	DLF
DATE:	08-10-04
APPROVED:	DLF
DATE:	12-14-09
DRAWING NO:	3-01-035
SIZE: B	REV: B
SCALE:	1 : 4
SHEET:	13 OF 26

SECTION "B-B" (1)**

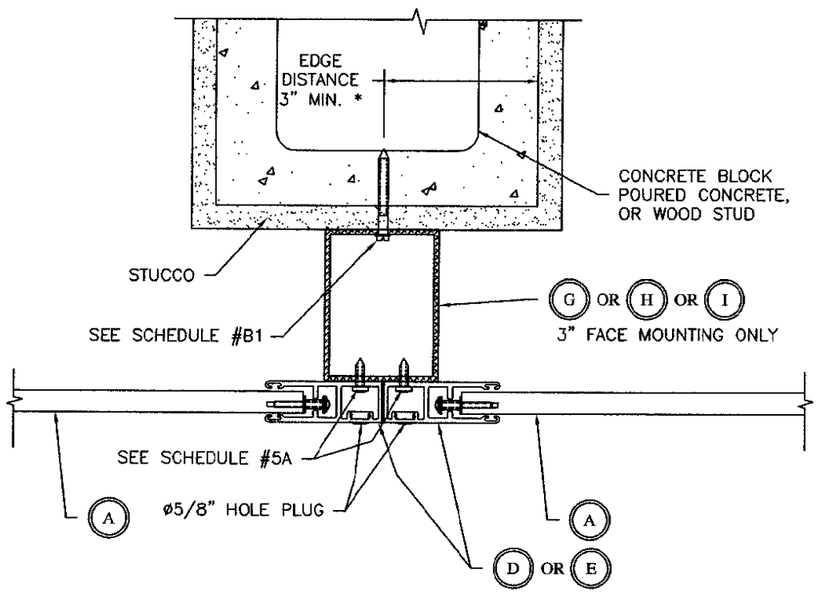

HOLE SPACING O.C. SCHEDULE # B1 (CONC.) #						
PSF\SLAT SPAN	48"	60"	72"	96"	120"	144"
10	16"	16"	16"	16"	16"	16"
15	16"	16"	16"	16"	16"	16"
20	16"	16"	16"	16"	14"	16"
25	16"	16"	16"	16"	14"	14"
30	16"	14"	14"	14"	14"	14"
35	16"	14"	14"	14"	14"	14"
40	16"	14"	14"	14"	12"	12"
45	14"	14"	14"	14"	12"	10"
50	14"	14"	14"	14"	11"	9"
55	14"	12"	12"	12"	10"	8"
60	14"	12"	12"	11"	9"	8"
65	14"	12"	11"	10"	8"	7"
70	14"	12"	10"	9"	8"	6"
75	14"	12"	10"	8"	7"	6"
80	14"	12"	10"	8"	7"	5"
85	14"	12"	9"	7"	6"	5"
90	12"	12"	9"	7"	6"	5"
95	12"	12"	9"	7"	6"	4"
100	12"	10"	8"	7"	5"	4"
120	12"	9"	7"	6"	5"	3"

3320 PSI CONCRETE OR CELL FILLED CMU, 1/4" DIA. TAPCON, 1-3/4" EMBEDMENT

HOLE SPACING O.C. SCHEDULE # B1 (WOOD) # #						
PSF\SLAT SPAN	48"	60"	72"	96"	120"	144"
10	16"	16"	16"	16"	16"	16"
15	16"	16"	16"	14'	14'	14'
20	16"	16"	16"	14'	14'	14'
25	16"	16"	14"	14'	14'	12"
30	16"	14"	14"	12"	12"	12"
35	14"	14"	14"	12"	12"	10"
40	14"	14"	14"	12"	10"	10"
45	14"	12"	12"	12"	10"	9"
50	14"	12"	12"	10"	9"	8"
55	12"	12"	12"	10"	8"	8"
60	12"	12"	12"	8"	8"	7"
65	12"	12"	10"	8"	7"	7"
70	12"	12"	10"	7"	7"	7"
75	12"	12"	10"	7"	7"	6"
80	12"	10"	10"	7"	6"	6"
85	12"	10"	9"	6"	6"	6"
90	10"	10"	9"	6"	6"	5"
95	10"	10"	9"	6"	5"	4"
100	10"	9"	7"	5"	4"	3"
120	N/A	N/A	N/A	N/A	N/A	N/A

WOOD, 1/4" DIA. TAPCON, LAG SCREW, OR #14 SS SMS 1 1/2" EMBEDMENT

HOLE SPACING O.C. SCHEDULE # B1 (CMU H.) **						
PSF\SLAT SPAN	48"	60"	72"	96"	120"	144"
10	16"	14"	13"	12"	12"	10"
15	16"	14"	13"	12"	12"	10"
20	14"	14"	13"	12"	12"	10"
25	14"	14"	13"	12"	10"	9"
30	14"	12"	10"	9"	8"	7"
35	14"	12"	10"	8"	7"	6"
40	14"	12"	10"	8"	6"	5"
45	10"	10"	8"	7"	6"	4"
50	10"	9"	8"	7"	5"	4"
55	10"	9"	7"	6"	5"	3"
60	9"	8"	7"	6"	5"	3"
65	9"	7"	6"	5"	4"	3"
70	8"	7"	6"	5"	4"	3"
75	8"	7"	6"	5"	4"	2.5"
80	7"	6"	6"	5"	4"	2.5"
85	7"	5"	5"	4"	4"	2.5"
90	7"	5"	5"	4"	3"	N/A
95	7"	5"	5"	4"	3"	N/A
100	6"	5"	4"	3"	2.5"	N/A
120	6"	5"	3"	2.5"	N/A	N/A

** CMU HOLLOW, 1/4" DIA. TAPCON, 1 1/4" EMBEDMENT

HOLE SPACING O.C. SCHEDULE 5A *						
PSF\SLAT SPAN	48"	60"	72"	96"	120"	144"
10	16"	16"	16"	12"	10"	7"
15	16"	16"	16"	10"	7"	5"
20	16"	16"	14'	8"	5"	3"
25	16"	16"	12"	7"	4"	3"
30	16"	14"	10"	6"	3"	2"
35	16"	14"	7"	5"	3"	2"
40	16"	14"	6"	3"	2"	2"
45	16"	12"	6"	3"	2"	N/A
50	16"	10"	5"	3"	2"	N/A
55	16"	8"	5"	2"	N/A	N/A
60	15"	7"	4"	2"	N/A	N/A
65	15"	6"	4"	2"	N/A	N/A
70	14"	5"	3"	2"	N/A	N/A
75	13"	5"	3"	2"	N/A	N/A
80	11"	4"	3"	N/A	N/A	N/A
85	10"	4"	2"	N/A	N/A	N/A
90	9"	4"	2"	N/A	N/A	N/A
95	8"	4"	2"	N/A	N/A	N/A
100	7"	3"	2"	N/A	N/A	N/A
120	5"	3"	2"	N/A	N/A	N/A
140	4"	2"	2"	N/A	N/A	N/A
160	3"	2"	N/A	N/A	N/A	N/A
180	3"	2"	N/A	N/A	N/A	N/A
200	2"	N/A	N/A	N/A	N/A	N/A
220	2"	N/A	N/A	N/A	N/A	N/A
240	2"	N/A	N/A	N/A	N/A	N/A
260	2"	N/A	N/A	N/A	N/A	N/A
280	2"	N/A	N/A	N/A	N/A	N/A

14 X 3/4" SS SMS into .125" ALUM. ALLOY 6005-T5

Roll-a-way By OMI
1661 GLENLAKE AVENUE
ITASCA, IL 60143

COPYRIGHT © 2008
QUALITAS MANUFACTURING INC.

DRAWING TITLE:

NOTICE OF ACCEPTANCE
END RETENTION - TDI
PRODUCT APPROVAL

D.L. Fowler
Professional Engineer
Texas License No.
PE 102913

11-04-10

DRAWN:	DLF
DATE:	11-04-09
APPROVED:	DLF
DATE:	12-15-09
DRAWING NO:	3-01-035
SIZE: B	REV: B
SCALE:	1 : 4
SHEET:	14 OF 26

NOTE: MAXIMUM GAP BETWEEN CUT END OF POST AND POST BASE IS 1/4"

SECTION "B-B" (2)**

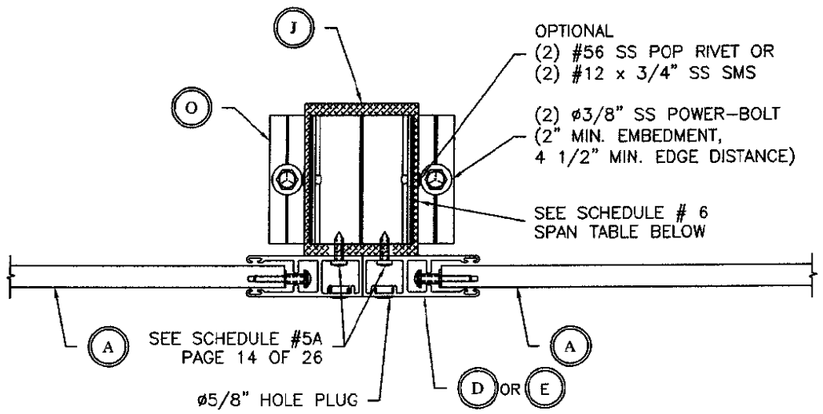

**SCHEDULE 6 BASED ON EQUAL SPANS.

IF SPANS ARE NOT EQUAL THE DIFFERENCE BETWEEN SPANS (SPAN1 - SPAN2) SHALL BE USED TO EVALUATE THE FREE STANDING MULLION AS AN END MULLION USING SCHEDULE 3, PAGE 13 OF 26. THE EVALUATION SHALL BE AT THE SLAT SPAN DIFFERENCE

SCHEDULE # 6

B-B(2) MAXIMUM MULLION HEIGHT (IN)

PSF	SLAT WIDTH (IN) - CLEAR SPAN (NO STORM BARS) - SEE PAGE 8															
	48	54	60	66	72	78	84	90	96	108	120	132	144	156	168	180
10	240.0	240.0	240.0	240.0	240.0	240.0	240.0	240.0	240.0	240.0	240.0	240.0	240.0	240.0	240.0	240.0
15	240.0	240.0	240.0	240.0	240.0	240.0	240.0	240.0	240.0	240.0	240.0	235.5	228.9	222.9	217.5	212.6
20	240.0	240.0	240.0	240.0	240.0	240.0	240.0	240.0	237.6	228.6	220.8	214.0	208.0	200.2	193.0	186.5
25	240.0	240.0	240.0	240.0	240.0	236.1	230.5	225.3	220.6	212.2	203.9	194.5	186.3	179.1	172.6	166.8
30	240.0	240.0	240.0	234.7	228.1	222.2	216.9	212.0	207.6	196.1	186.1	177.6	170.1	163.5	157.6	152.3
35	240.0	237.9	229.9	222.9	216.7	211.1	205.4	198.6	192.4	181.5	172.3	164.4	157.5	151.4	145.9	141.0
40	236.4	227.6	219.9	213.2	207.2	199.3	192.1	185.7	179.9	169.8	161.2	153.8	147.3	141.6	136.5	131.9
45	227.3	218.8	211.4	203.9	195.4	187.9	181.2	175.1	169.6	160.1	152.0	145.0	138.9	133.5	128.7	124.4
50	219.5	211.3	202.6	193.4	185.4	178.2	171.9	166.1	160.9	151.9	144.2	137.5	131.8	126.6	122.1	117.5
60	206.2	194.7	185.0	176.6	169.2	162.7	156.9	151.7	146.9	138.6	126.9	115.5	106.0	97.9	91.0	84.9
70	190.9	180.3	171.3	163.5	156.7	150.6	145.3	140.4	135.5	120.7	108.8	99.0	90.8	83.9	78.0	72.8
80	178.5	168.6	160.2	152.9	146.5	140.9	135.2	126.3	118.6	105.6	95.2	86.6	79.5	73.4	68.2	63.7
90	168.3	159.0	151.0	144.2	138.2	129.3	120.2	112.3	105.4	93.9	84.6	77.0	70.6	65.3	60.6	56.6
100	159.7	150.8	143.3	136.8	125.8	116.3	108.2	101.1	94.9	84.5	76.1	69.3	63.6	58.7	54.6	51.0
110	152.3	143.8	136.6	124.5	114.4	105.8	98.3	91.9	86.2	76.8	69.2	63.0	57.8	53.4	49.6	46.3
120	145.8	137.7	125.3	114.2	104.9	96.9	90.1	84.2	79.1	70.4	63.4	57.7	53.0	48.9	45.5	42.5
130	140.1	128.2	115.7	105.4	96.8	89.5	83.2	77.8	73.0	65.0	58.6	53.3	48.9	45.2	42.0	39.2
140	133.4	119.0	107.4	97.9	89.9	83.1	77.3	72.2	67.8	60.3	54.4	49.5	45.4	42.0	39.0	36.4

Roll-a-way By AMI
1661 GLENLAKE AVENUE
ITASCA, IL 60143

COPYRIGHT © 2008
QUALITAS MANUFACTURING INC.

DRAWING TITLE: NOTICE OF ACCEPTANCE END RETENTION - TDI PRODUCT APPROVAL

D.L. Fowler
Professional Engineer
Texas License No.
PE 102913

DRAWN:	DLF
DATE:	11-05-09
APPROVED:	DF
DATE:	12-15-09
DRAWING NO:	3-01-035
SIZE: B	REV: B
SCALE:	1 : 4
SHEET:	15 OF 26

SECTION "B-B"(3)**

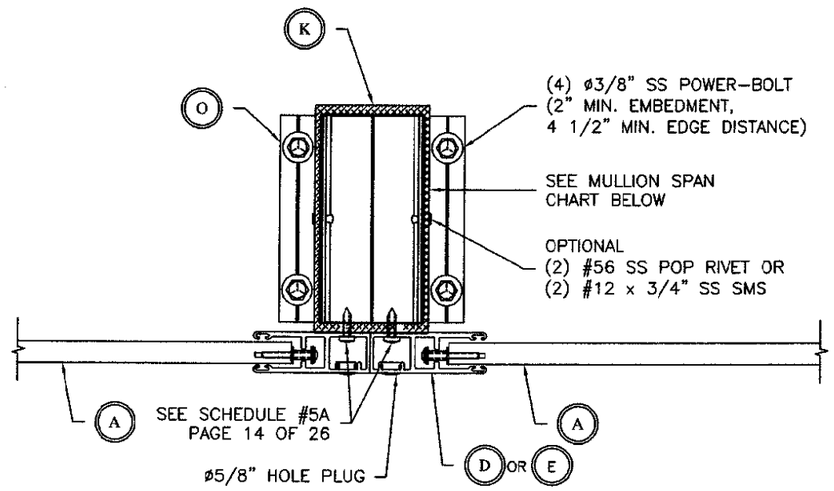

**SCHEDULE 7 BASED ON EQUAL SPANS.

IF SPANS ARE NOT EQUAL THE DIFFERENCE BETWEEN SPANS (SPAN1 - SPAN2) SHALL BE USED TO EVALUATE THE FREE STANDING MULLION AS AN END MULLION USING SCHEDULE 3, PAGE 13 OF 26. THE EVALUATION SHALL BE AT THE SLAT SPAN DIFFERENCE

SCHEDULE 7

B-B(3) MAXIMUM MULLION HEIGHT (IN)

PSF	SLAT WIDTH (IN) - CLEAR SPAN (NO STORM BARS) - SEE PAGE 8															
	48	54	60	66	72	78	84	90	96	108	120	132	144	156	168	180
10	240.0	240.0	240.0	240.0	240.0	240.0	240.0	240.0	240.0	240.0	240.0	240.0	240.0	240.0	240.0	240.0
15	240.0	240.0	240.0	240.0	240.0	240.0	240.0	240.0	240.0	240.0	240.0	240.0	240.0	240.0	240.0	240.0
20	240.0	240.0	240.0	240.0	240.0	240.0	240.0	240.0	240.0	240.0	240.0	240.0	240.0	240.0	233.5	225.7
25	240.0	240.0	240.0	240.0	240.0	240.0	240.0	240.0	240.0	240.0	240.0	235.4	225.4	216.7	208.9	201.9
30	240.0	240.0	240.0	240.0	240.0	240.0	240.0	240.0	240.0	237.2	225.2	214.8	205.8	197.8	190.7	184.3
35	240.0	240.0	240.0	240.0	240.0	240.0	240.0	240.0	232.7	219.6	208.5	198.9	190.5	183.1	176.5	170.6
40	240.0	240.0	240.0	240.0	240.0	240.0	232.5	224.7	217.7	205.4	195.0	186.1	178.2	171.3	165.1	159.6
45	240.0	240.0	240.0	240.0	236.4	227.3	219.2	211.9	205.3	193.7	183.9	175.4	168.0	161.5	155.7	150.5
50	240.0	240.0	240.0	233.6	223.8	215.2	207.5	200.6	194.3	183.4	174.1	166.1	159.1	152.9	147.4	142.5
60	240.0	235.6	223.8	213.6	204.7	196.8	189.8	183.5	177.8	167.7	159.2	151.9	145.5	139.9	134.8	130.3
70	230.9	218.1	207.2	197.8	189.5	182.2	175.7	169.9	164.6	155.3	147.4	140.6	134.7	129.5	124.8	120.6
80	216.0	204.0	193.8	185.0	177.3	170.5	164.4	158.9	153.9	145.3	137.9	131.6	126.0	121.1	116.8	112.8
90	203.7	192.3	182.7	174.4	167.2	160.7	155.0	149.8	145.1	137.0	130.0	124.0	118.8	114.2	110.1	106.4
100	193.2	182.5	173.4	165.5	158.6	152.5	147.0	142.1	137.7	129.9	123.3	117.7	112.7	108.3	104.4	100.9
110	184.2	174.0	165.3	157.8	151.2	145.4	140.2	135.5	131.3	123.9	117.6	112.2	107.5	103.3	99.2	92.7
120	176.4	166.6	158.2	151.1	144.8	139.2	134.2	129.7	125.7	118.6	112.6	107.4	102.9	97.9	91.0	84.9
130	169.5	160.0	152.0	145.1	139.1	133.7	129.0	124.7	120.8	114.0	108.2	103.2	97.8	90.4	84.0	78.4
140	163.0	153.9	146.2	139.6	133.8	128.6	124.0	119.9	116.1	109.6	104.0	99.0	90.8	83.9	78.0	72.8

** MAXIMUM GAP BETWEEN CUT END OF POST AND POST BASE IS 1/4"

Roll-a-way By OMI
1661 GLENLAKE AVENUE
ITASCA, IL 60143

COPYRIGHT © 2008
QUALITAS MANUFACTURING INC.

DRAWING TITLE:
NOTICE OF ACCEPTANCE
END RETENTION - TDI
PRODUCT APPROVAL

D.L. Fowler
Professional Engineer
Texas License No.
PE 102913

DRAWN:	DF
DATE:	11-05-09
APPROVED:	DF
DATE:	11-05-09
DRAWING NO:	3-01-035
SIZE: B	REV: B
SCALE:	1 : 4
SHEET:	16 OF 26

SECTION "C-C" (1)

FIXED STORM BAR

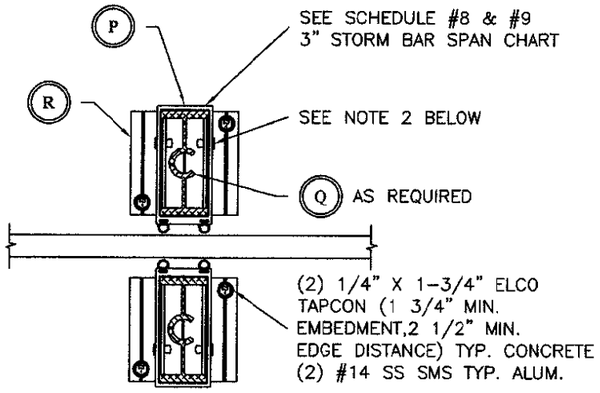

SECTION "C-C" (2)

REMOVABLE STORM BAR

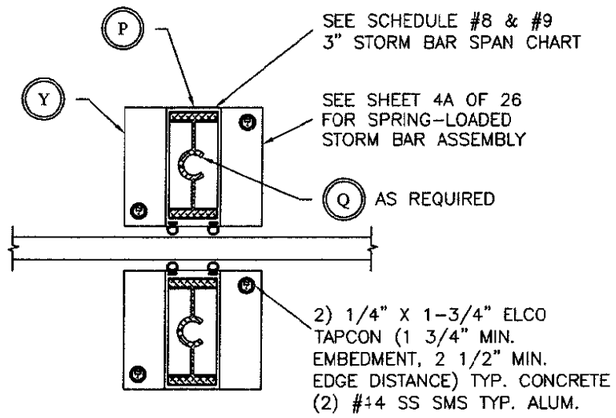

SECTION "C-C" (5)

FIXED OR REMOVABLE STORM BAR

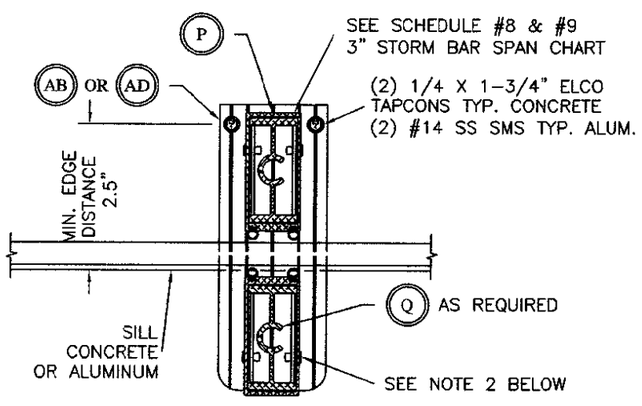

SECTION "C-C" (6)

FIXED OR REMOVABLE STORM BAR

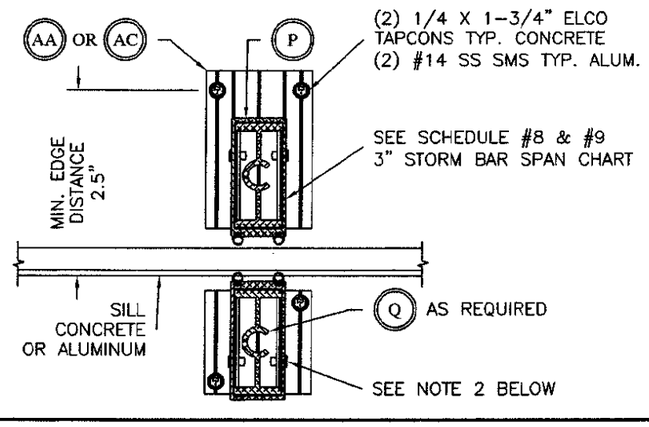

NOTES:
1. ALL PERFORMANCE CHARTS ARE DRAWING SECTION SPECIFIC AND ARE BASED ON ANCHORAGE, BENDING STRESS, AND DEFLECTION LIMITS.
2. OPTIONAL (2) #56 SS POP RIVET OR (2) #12 x 3/4" SS SMS THRU STORM BAR INTO STORM BAR BASE PLATE. NON STRUCTURAL FASTENER TO KEEP ALUMINUM FROM VIBRATING.

3" STORM BAR PERFORMANCE
FIXED OR REMOVABLE
SECTION "C-C" (1), (2), (5), & (6)

SCHEDULE #8
MAXIMUM STORM BAR HEIGHT (INCHES)

PSF 3 SPAN	PSF 2 SPAN	SPAN WIDTH IN INCHES (BETWEEN RAILS)										
		48	60	72	84	96	108	120	132	144	156	168
17	10	183.0	169.8	159.8	151.8	145.2	139.6	134.4	128.5	123.3	118.7	114.6
26	15	159.8	148.4	139.6	131.3	123.3	116.6	110.9	106.0	101.7	97.9	94.5
35	20	145.2	134.4	123.3	114.6	107.6	101.7	96.7	92.4	88.7	85.3	82.4
43	25	134.4	120.9	110.9	103.1	96.7	91.4	87.0	83.1	79.7	76.7	74.0
52	30	123.3	110.9	101.7	94.5	88.6	83.8	79.7	76.1	73.0	70.2	67.8
61	35	114.6	103.0	94.5	87.8	82.3	77.8	74.0	70.7	67.8	65.2	62.9
70	40	107.5	96.7	88.6	82.3	77.2	73.0	69.4	66.3	63.5	61.1	59.0
78	45	101.6	91.4	83.7	77.8	72.9	68.9	65.5	62.6	60.0	57.7	55.7
87	50	96.6	86.9	79.6	73.9	69.3	65.5	62.3	59.5	57.0	54.9	52.1
105	60	88.5	79.6	72.9	67.7	63.5	60.0	57.0	54.4	50.7	46.8	43.4
122	70	82.2	73.9	67.7	62.9	58.9	55.7	52.1	47.4	43.4	40.1	37.2
140	80	77.1	69.3	63.5	58.9	55.2	50.7	45.6	41.5	38.0	35.1	32.6
157	90	72.9	65.5	60.0	55.7	50.7	45.0	40.5	36.8	33.8	31.2	29.0
175	100	69.3	62.2	57.0	52.1	45.6	40.5	36.5	33.2	30.4	28.1	26.1

3" WITH INSERT STORM BAR
FIXED OR REMOVABLE
SECTION "C-C" (1), (2), (5), & (6)

SCHEDULE #9
MAXIMUM STORM BAR HEIGHT (INCHES)

PSF 3 SPAN	PSF 2 SPAN	SPAN WIDTH IN INCHES (BETWEEN RAILS)										
		48	60	72	84	96	108	120	132	144	156	168
17	10	223.9	207.9	195.6	185.8	177.7	170.9	165.0	159.8	155.2	151.2	147.5
26	15	195.6	181.6	170.9	162.3	155.2	149.3	144.1	139.6	135.6	130.8	126.4
35	20	177.7	165.0	155.2	147.5	141.1	135.6	129.3	123.7	118.8	114.4	110.5
43	25	165.0	153.2	144.1	136.9	129.3	122.4	116.5	111.4	107.0	103.0	99.5
52	30	155.2	144.1	135.6	126.3	118.7	112.4	107.0	102.3	98.2	93.5	86.9
61	35	147.5	136.9	126.3	117.6	110.5	104.5	99.5	94.8	86.9	80.2	74.4
70	40	141.1	129.2	118.7	110.4	103.7	98.2	91.2	82.9	76.0	70.2	65.1
78	45	135.6	122.3	112.3	104.5	98.1	90.1	81.1	73.7	67.6	62.4	57.9
87	50	129.1	116.4	106.9	99.4	91.2	81.1	73.0	66.3	60.8	56.1	52.1
105	60	118.5	106.8	98.1	86.9	76.0	67.6	60.8	55.3	50.7	46.8	43.4
122	70	110.3	99.3	86.9	74.4	65.1	57.9	52.1	47.4	43.4	40.1	37.2
140	80	103.5	91.2	76.0	65.1	57.0	50.7	45.6	41.5	38.0	35.1	32.6
157	90	97.9	81.1	67.6	57.9	50.7	45.0	40.5	36.8	33.8	31.2	29.0
175	100	91.2	73.0	60.8	52.1	45.6	40.5	36.5	33.2	30.4	28.1	26.1

Roll-a-way By OMI
1661 GLENLAKE AVENUE
ITASCA, IL 60143

COPYRIGHT © 2008
QUALITAS MANUFACTURING INC.

DRAWING TITLE:
NOTICE OF ACCEPTANCE
END RETENTION - TDI
PRODUCT APPROVAL

D.L. Fowler
Professional Engineer
Texas License No.
PE 102913

DRAWN:	DF
DATE:	11-05-09
APPROVED:	DF
DATE:	11-05-09
DRAWING NO:	3-01-035
SIZE: B	REV: B
SCALE:	1 : 4
SHEET:	17 OF 26

SECTION "C-C" (3)

FIXED STORM BAR

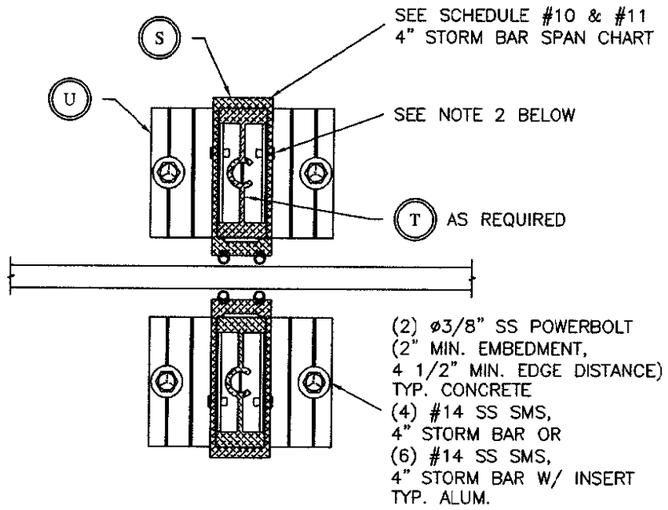

SECTION "C-C" (4)

REMOVABLE STORM BAR

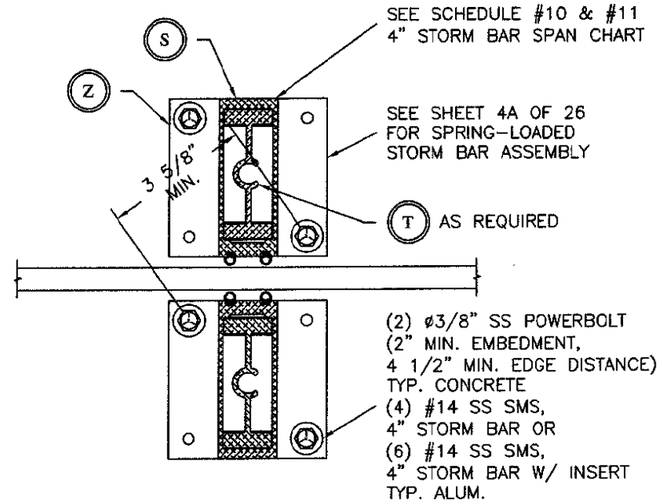

4"STORM BAR PERFORMANCE
FIXED OR REMOVABLE
SECTION "C-C" (3) & (4)

SCHEDULE # 10
MAXIMUM STORM BAR HEIGHT (INCHES)

PSF 3 SPAN	PSF 2 SPAN	SPAN WIDTH IN INCHES (BETWEEN RAILS)										
		48	60	72	84	96	108	120	132	144	156	168
17	10	240.0	240.0	240.0	239.5	229.1	220.3	212.6	206.0	200.1	194.8	190.1
26	15	240.0	234.1	220.3	209.2	200.1	192.4	184.7	176.8	169.8	163.6	158.1
35	20	229.1	212.6	200.1	190.1	179.3	169.8	161.7	154.7	148.6	143.1	138.3
43	25	212.6	197.4	184.7	172.0	161.7	153.1	145.8	139.4	133.9	128.9	124.5
52	30	200.1	184.6	169.7	158.0	148.5	140.6	133.8	128.0	122.9	118.3	114.3
61	35	190.1	171.9	158.0	147.1	138.2	130.8	124.5	119.0	114.3	110.0	106.2
70	40	179.1	161.6	148.5	138.2	129.8	122.8	116.9	111.8	107.3	103.3	99.7
78	45	169.6	153.0	140.5	130.7	122.8	116.2	110.6	105.7	101.4	97.7	94.3
87	50	161.5	145.6	133.7	124.4	116.9	110.6	105.2	100.6	96.5	92.9	89.7
105	60	148.4	133.7	122.8	114.2	107.2	101.4	96.5	92.2	88.5	85.2	82.2
122	70	138.1	124.4	114.2	106.2	99.7	94.3	89.7	85.7	82.2	79.1	76.4
140	80	129.7	116.8	107.2	99.6	93.5	88.4	84.1	80.4	77.1	74.2	71.7
157	90	122.7	110.4	101.3	94.2	88.4	83.6	79.5	76.0	72.9	70.2	67.7
175	100	116.7	105.1	96.4	89.6	84.1	79.5	75.6	72.2	69.3	66.7	64.4

4" W INSERT STORM BAR PERFORMANCE
FIXED OR REMOVABLE
SECTION "C-C" (3) & (4)

SCHEDULE # 11
MAXIMUM STORM BAR HEIGHT (INCHES)

PSF 3 SPAN	PSF 2 SPAN	SPAN WIDTH IN INCHES (BETWEEN RAILS)										
		48	60	72	84	96	108	120	132	144	156	168
17	10	240.0	240.0	240.0	240.0	240.0	240.0	240.0	239.3	232.5	226.4	220.9
26	15	240.0	240.0	240.0	240.0	232.5	223.5	215.8	209.1	203.1	197.8	192.9
35	20	240.0	240.0	232.5	220.9	211.2	203.1	196.1	189.3	182.0	175.6	169.7
43	25	240.0	229.4	215.8	205.0	196.1	187.4	178.7	171.1	164.5	158.6	153.3
52	30	232.5	215.8	203.1	192.9	182.0	172.6	164.5	157.5	151.4	145.9	141.0
61	35	220.9	205.0	192.9	180.3	169.7	160.9	153.3	146.8	141.0	135.9	131.3
70	40	211.2	196.1	182.0	169.7	159.7	151.4	144.2	138.0	132.6	127.8	123.5
78	45	203.1	187.4	172.6	160.9	151.4	143.4	136.6	130.7	125.6	121.0	116.9
87	50	196.1	178.6	164.5	153.3	144.2	136.6	130.1	124.5	119.5	115.2	111.3
105	60	181.9	164.4	151.3	140.9	132.5	125.5	119.5	114.3	109.8	105.8	102.2
122	70	169.6	153.2	140.9	131.3	123.4	116.8	111.2	106.4	102.2	98.4	95.0
140	80	159.6	144.1	132.5	123.4	116.0	109.8	104.5	99.9	95.9	92.4	89.2
157	90	151.2	136.5	125.4	116.8	109.7	103.9	98.9	94.6	90.8	87.4	84.4
175	100	144.0	130.0	119.4	111.2	104.5	98.9	94.1	90.0	86.4	83.2	80.3

NOTES:
1. ALL PERFORMANCE CHARTS ARE DRAWING SECTION SPECIFIC AND ARE BASED ON ANCHORAGE, BENDING STRESS, AND DEFLECTION LIMITS.
2. OPTIONAL (2) #56 SS POP RIVET OR (2) #12 x 3/4" SS SMS THRU STORM BAR INTO STORM BAR BASE PLATE. NON STRUCTURAL FASTENER TO KEEP ALUMINUM FROM VIBRATING.

Roll-a-way By OMI
1661 GLENLAKE AVENUE
ITASCA, IL 60143

COPYRIGHT © 2008
QUALITAS MANUFACTURING INC.

DRAWING TITLE: NOTICE OF ACCEPTANCE END RETENTION - TDI PRODUCT APPROVAL

D.L. Fowler
Professional Engineer
Texas License No.
PE 102913

DRAWN:	DF
DATE:	11-05-09
APPROVED:	DF
DATE:	11-05-09
DRAWING NO:	3-01-035
SIZE: B	REV: B
SCALE:	1 : 4
SHEET:	18 OF 26

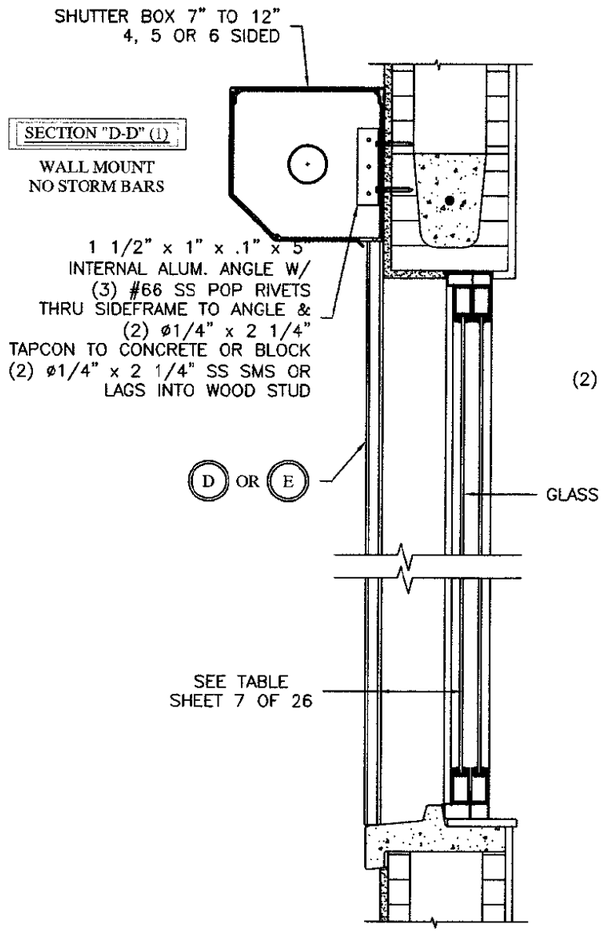

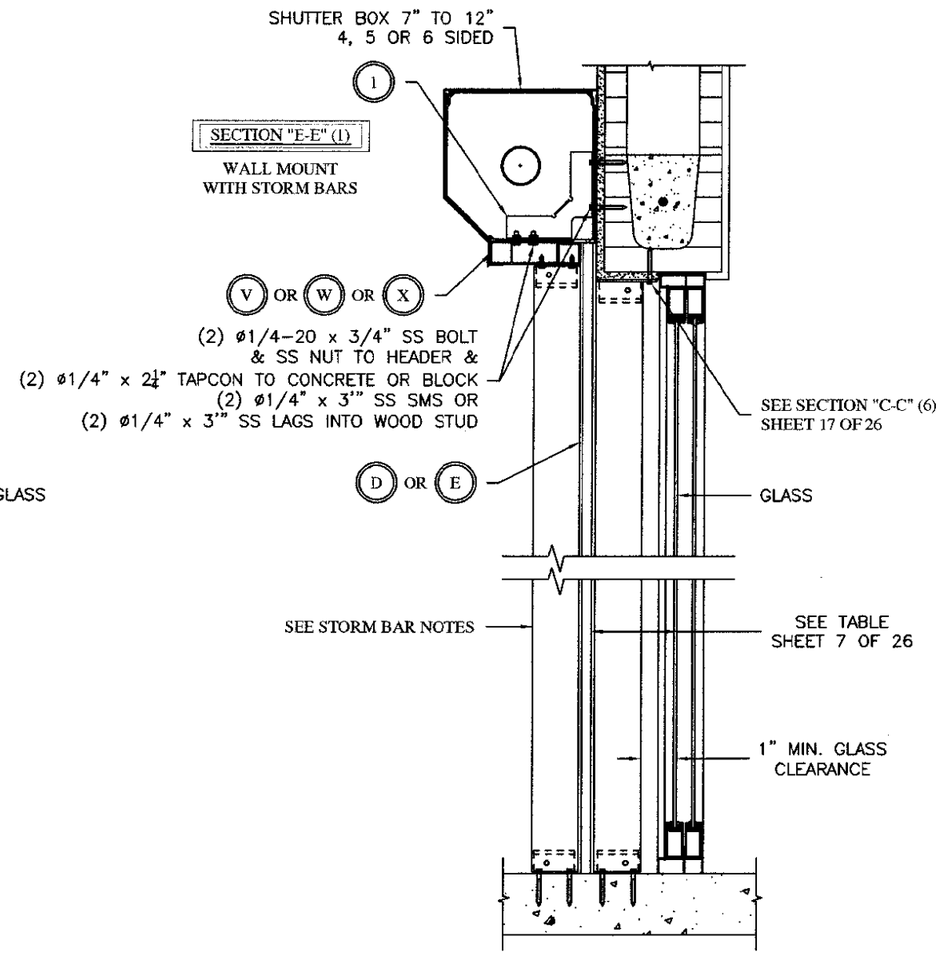

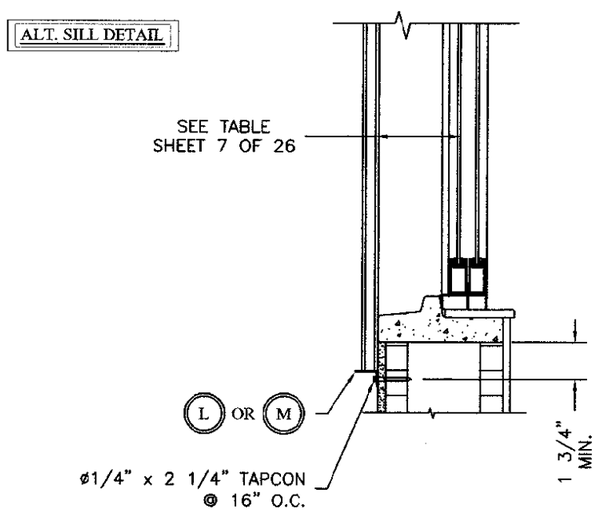

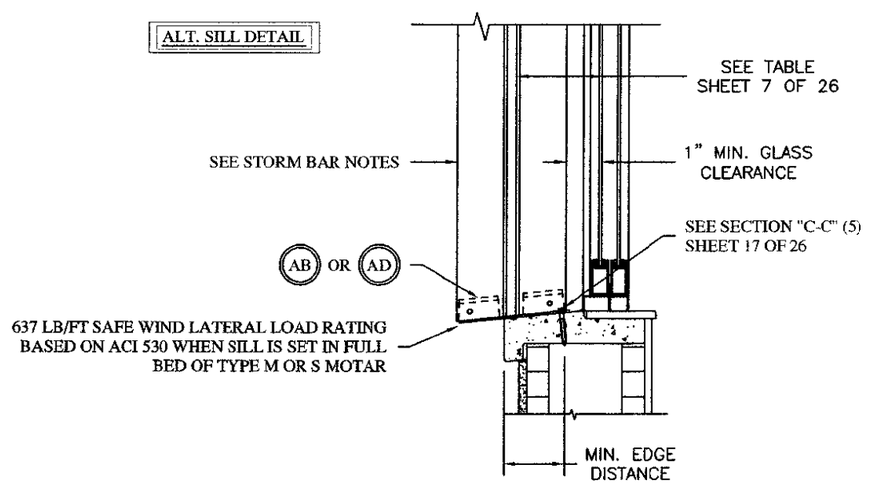

STORM BAR NOTES:

1. SHUTTER SECTIONS ARE SHOWN WITH FIXED STORM BARS. STORM BARS CAN BE FIXED OR REMOVABLE, REMOVABLE (SPRING-LOADED) STORM BAR ASSEMBLIES & MOUNTING ARE SHOWN ON SHEET 17, 18, & 4A OF 26.
2. SHUTTER(S) SHOULD NOT BE ROLLED DOWN DURING WIND EVENTS WITHOUT REMOVABLE STORM BARS IN PLACE. ROLL-A-WAY IS NOT RESPONSIBLE FOR SUBSEQUENT DAMAGE.
3. REMOVING SPRING-LOADED STORM BARS: REMOVE PIN, LIFT UP ON STORM BAR, WHEN BOTTOM FEET CLEAR THE STORM BAR BASE PLATE, ROTATE STORM BAR OUT OF OPENING.
4. SHUTTERS WITH NO STORM BARS OVER 72" WIDE SHOULD USE SOME FORM OF HOOD SUPPORT, HEADER, TUBING OR EXTERNAL SUPPORT.
5. SEE ALLOWABLE HEADER SPAN TABLES ON PAGE 20 THRU 20C OF 26.
6. FOR ALLOWABLE HEADER SPANS USING EXTERIOR REINFORCEMENT BRACKETS SEE SHEET 24 OF 26.

Roll-a-way By QMI
1661 GLENLAKE AVENUE
ITASCA, IL 60143
COPYRIGHT © 2008
QUALITAS MANUFACTURING INC.

DRAWING TITLE:

NOTICE OF ACCEPTANCE
END RETENTION - TDI
PRODUCT APPROVAL

D.L. Fowler
Professional Engineer
Texas License No.
PE 102913

DRAWN:	DF
DATE:	08-10-04
APPROVED:	DLF
DATE:	10-28-08
DRAWING NO:	3-01-035
SIZE: B	REV: B
SCALE:	1 : 10
SHEET:	19 OF 26

SCHEDULE 12

MAXIMUM ALLOWABLE 2 SPAN 5.875 HEADER WIDTH (TRACK TO TRACK) E-E (1) ATTACHMENT TO WOOD

	STORM BAR HEIGHT UNDER HEADER															
PSF	42	48	54	60	66	72	78	84	90	96	102	108	114	120	126	132
25	192.0	192.0	192.0	192.0	192.0	192.0	192.0	192.0	186.1	180.7	175.7	171.2	167.0	163.1	159.5	156.1
30	192.0	192.0	192.0	192.0	192.0	189.5	182.8	176.7	171.2	166.2	161.6	157.4	153.6	150.0	146.6	143.5
35	192.0	192.0	192.0	192.0	183.8	176.7	170.3	164.6	159.5	154.8	150.5	146.6	143.0	139.6	136.5	133.6
40	192.0	192.0	189.5	180.7	173.0	166.2	160.2	154.8	150.0	145.6	141.5	137.8	134.4	131.2	128.3	125.5
45	192.0	189.5	179.6	171.2	163.9	157.4	151.7	146.6	142.0	137.8	134.0	130.5	127.2	124.2	119.0	113.6
50	192.0	180.7	171.2	163.1	156.1	150.0	144.5	139.6	135.2	131.2	127.6	124.2	118.4	112.4	107.1	102.2
55	183.8	172.9	163.8	156.1	149.4	143.5	138.2	133.6	129.3	125.5	120.3	113.6	107.6	102.2	97.3	92.9
60	176.6	166.1	157.4	149.9	143.4	137.8	132.7	128.2	124.2	117.1	110.2	104.1	98.6	93.7	89.2	85.2
65	170.2	160.1	151.6	144.4	138.2	132.7	127.9	123.5	115.3	108.1	101.8	96.1	91.0	86.5	82.4	78.6
70	164.5	154.7	146.5	139.5	133.5	128.2	123.5	114.7	107.1	100.4	94.5	89.2	84.5	80.3	76.5	73.0
75	159.3	149.8	141.9	135.1	129.2	124.1	115.3	107.1	99.9	93.7	88.2	83.3	78.9	75.0	71.4	68.1
80	154.6	145.4	137.6	131.1	125.4	117.1	108.1	100.4	93.7	87.8	82.7	78.1	74.0	70.3	66.9	63.9
85	150.3	141.3	133.8	127.4	120.3	110.2	101.8	94.5	88.2	82.7	77.8	73.5	69.6	66.1	63.0	60.1
90	146.4	137.6	130.3	124.1	113.6	104.1	96.1	89.2	83.3	78.1	73.5	69.4	65.8	62.5	59.5	56.8
95	142.7	134.2	127.0	118.4	107.6	98.6	91.0	84.5	78.9	74.0	69.6	65.8	62.3	59.2	56.4	53.8
100	139.4	131.0	124.0	112.4	102.2	93.7	86.5	80.3	75.0	70.3	66.1	62.5	59.2	56.2	53.5	51.1
125	125.6	112.4	99.9	89.9	81.8	75.0	69.2	64.2	60.0	56.2	52.9	50.0	47.3	45.0	42.8	40.9
150	107.1	93.7	83.3	75.0	68.1	62.5	57.7	53.5	50.0	46.8	44.1	41.6	39.5	37.5	35.7	34.1
175	91.8	80.3	71.4	64.2	58.4	53.5	49.4	45.9	42.8	40.2	37.8	35.7	33.8	32.1	30.6	29.2
200	80.3	70.3	62.5	56.2	51.1	46.8	43.2	40.2	37.5	35.1	33.1	31.2	29.6	28.1	26.8	25.6
225	71.4	62.5	55.5	50.0	45.4	41.6	38.4	35.7	33.3	31.2	29.4	27.8	26.3	25.0	23.8	22.7
250	64.2	56.2	50.0	45.0	40.9	37.5	34.6	32.1	30.0	28.1	26.5	25.0	23.7	22.5	21.4	20.4
275	58.4	51.1	45.4	40.9	37.2	34.1	31.5	29.2	27.3	25.6	24.1	22.7	21.5	20.4	19.5	18.6

SCHEDULE 13

MAXIMUM ALLOWABLE 3 SPAN 5.875" HEADER WIDTH (TRACK TO TRACK) E-E (1) ATTACHMENT TO WOOD

	STORM BAR HEIGHT UNDER HEADER															
PSF	42	48	54	60	66	72	78	84	90	96	102	108	114	120	126	132
25	192.0	192.0	192.0	192.0	192.0	192.0	192.0	192.0	192.0	192.0	192.0	191.3	186.6	182.3	178.3	174.1
30	192.0	192.0	192.0	192.0	192.0	192.0	192.0	192.0	191.3	185.7	180.7	176.0	168.0	159.6	152.0	145.1
35	192.0	192.0	192.0	192.0	192.0	192.0	190.3	184.0	178.3	171.0	160.9	152.0	144.0	136.8	130.3	124.3
40	192.0	192.0	192.0	192.0	192.0	185.7	179.1	171.0	159.6	149.6	140.8	133.0	126.0	119.7	114.0	108.8
45	192.0	192.0	192.0	191.3	183.2	176.0	163.7	152.0	141.8	133.0	125.2	118.2	112.0	106.4	101.3	96.7
50	192.0	192.0	191.3	182.3	174.1	159.5	147.3	136.8	127.7	119.7	112.6	106.4	100.8	95.7	91.2	87.0
55	192.0	192.0	183.1	174.1	158.3	145.1	133.9	124.3	116.1	108.8	102.4	96.7	91.6	87.0	82.9	79.1
60	192.0	185.6	176.0	159.6	145.1	133.0	122.8	114.0	106.4	99.7	93.9	88.7	84.0	79.8	76.0	72.5
65	190.2	179.0	163.7	147.3	133.9	122.8	113.3	105.2	98.2	92.1	86.6	81.8	77.5	73.7	70.1	67.0
70	183.8	171.0	152.0	136.8	124.3	114.0	105.2	97.7	91.2	85.5	80.5	76.0	72.0	68.4	65.1	62.2
75	178.1	159.6	141.8	127.7	116.1	106.4	98.2	91.2	85.1	79.8	75.1	70.9	67.2	63.8	60.8	58.0
80	171.0	149.6	133.0	119.7	108.8	99.7	92.1	85.5	79.8	74.8	70.4	66.5	63.0	59.8	57.0	54.4
85	160.9	140.8	125.2	112.6	102.4	93.9	86.6	80.5	75.1	70.4	66.3	62.6	59.3	56.3	53.6	51.2
90	152.0	133.0	118.2	106.4	96.7	88.7	81.8	76.0	70.9	66.5	62.6	59.1	56.0	53.2	50.7	48.4
95	144.0	126.0	112.0	100.8	91.6	84.0	77.5	72.0	67.2	63.0	59.3	56.0	53.0	50.4	48.0	45.8
100	136.8	119.7	106.4	95.7	87.0	79.8	73.7	68.4	63.8	59.8	56.3	53.2	50.4	47.9	45.6	43.5
125	109.4	95.7	85.1	76.6	69.6	63.8	58.9	54.7	51.1	47.9	45.1	42.6	40.3	38.3	36.5	34.8
150	91.2	79.8	70.9	63.8	58.0	53.2	49.1	45.6	42.6	39.9	37.5	35.5	33.6	31.9	30.4	29.0
175	78.2	68.4	60.8	54.7	49.7	45.6	42.1	39.1	36.5	34.2	32.2	30.4	28.8	27.4	26.1	24.9
200	68.4	59.8	53.2	47.9	43.5	39.9	36.8	34.2	31.9	29.9	28.2	26.6	25.2	23.9	22.8	21.8
225	60.8	53.2	47.3	42.6	38.7	35.5	32.7	30.4	28.4	26.6	25.0	23.6	22.4	21.3	20.3	19.3
250	54.7	47.9	42.6	38.3	34.8	31.9	29.5	27.4	25.5	23.9	22.5	21.3	20.2	19.1	18.2	17.4
275	49.7	43.5	38.7	34.8	31.7	29.0	26.8	24.9	23.2	21.8	20.5	19.3	18.3	17.4	16.6	15.8

SCHEDULE 14

MAXIMUM ALLOWABLE 2 SPAN 5.875" HEADER WIDTH (TRACK TO TRACK) E-E (1) ATTACHMENT TO BLOCK

	STORM BAR HEIGHT UNDER HEADER															
PSF	42	48	54	60	66	72	78	84	90	96	102	108	114	120	126	132
25	192.0	192.0	192.0	192.0	192.0	192.0	192.0	192.0	186.1	180.7	175.7	171.2	167.0	163.1	159.5	156.1
30	192.0	192.0	192.0	192.0	192.0	189.5	182.8	176.7	171.2	166.2	161.6	157.4	153.6	150.0	146.6	143.5
35	192.0	192.0	192.0	192.0	183.8	176.7	170.3	164.6	159.5	154.8	150.5	146.6	143.0	139.6	134.8	128.7
40	192.0	192.0	189.5	180.7	173.0	166.2	160.2	154.8	150.0	145.6	141.5	137.6	130.4	123.8	117.9	112.6
45	192.0	189.5	179.6	171.2	163.9	157.4	151.7	146.6	142.0	137.6	129.5	122.3	115.9	110.1	104.8	100.1
50	192.0	180.7	171.2	163.1	156.1	150.0	144.5	139.6	132.1	123.8	116.6	110.1	104.3	99.1	94.4	90.1
55	183.8	172.9	163.8	156.1	149.4	143.5	138.2	128.7	120.1	112.6	106.0	100.1	94.8	90.1	85.8	81.9
60	176.6	166.1	157.4	149.9	143.4	137.6	127.0	117.9	110.1	103.2	97.1	91.7	86.9	82.6	78.6	75.1
65	170.2	160.1	151.6	144.4	138.2	127.0	117.2	108.9	101.6	95.3	89.7	84.7	80.2	76.2	72.6	69.3
70	164.5	154.7	146.5	139.5	128.7	117.9	108.9	101.1	94.4	88.5	83.3	78.6	74.5	70.8	67.4	64.3
75	159.3	149.8	141.9	132.1	120.1	110.1	101.6	94.4	88.1	82.6	77.7	73.4	69.5	66.0	62.9	60.0
80	154.6	145.4	137.6	123.8	112.6	103.2	95.3	88.5	82.6	77.4	72.8	68.8	65.2	61.9	59.0	56.3
85	150.3	141.3	129.5	116.6	106.0	97.1	89.7	83.3	77.7	72.8	68.6	64.8	61.3	58.3	55.5	53.0
90	146.4	137.6	122.3	110.1	100.1	91.7	84.7	78.6	73.4	68.8	64.8	61.2	57.9	55.0	52.4	50.0
95	142.7	130.4	115.9	104.3	94.8	86.9	80.2	74.5	69.5	65.2	61.3	57.9	54.9	52.1	49.7	47.4
100	139.4	123.8	110.1	99.1	90.1	82.6	76.2	70.8	66.0	61.9	58.3	55.0	52.1	49.5	47.2	45.0
125	113.2	99.1	88.1	79.3	72.1	66.0	61.0	56.6	52.8	49.5	46.6	44.0	41.7	39.6	37.7	36.0
150	94.4	82.6	73.4	66.0	60.0	55.0	50.8	47.2	44.0	41.3	38.9	36.7	34.8	33.0	31.5	30.0
175	80.9	70.8	62.9	56.6	51.5	47.2	43.5	40.4	37.7	35.4	33.3	31.5	29.8	28.3	27.0	25.7
200	70.8	61.9	55.0	49.5	45.0	41.3	38.1	35.4	33.0	31.0	29.1	27.5	26.1	24.8	23.6	22.5
225	62.9	55.0	48.9	44.0	40.0	36.7	33.9	31.5	29.4	27.5	25.9	24.5	23.2	22.0	21.0	20.0
250	56.6	49.5	44.0	39.6	36.0	33.0	30.5	28.3	26.4	24.8	23.3	22.0	20.9	19.8	18.9	18.0
275	51.5	45.0	40.0	36.0	32.8	30.0	27.7	25.7	24.0	22.5	21.2	20.0	19.0	18.0	17.2	16.4

SCHEDULE 15

MAXIMUM ALLOWABLE 3 SPAN 5.875" HEADER WIDTH (TRACK TO TRACK) E-E (1) ATTACHMENT TO BLOCK

	STORM BAR HEIGHT UNDER HEADER															
PSF	42	48	54	60	66	72	78	84	90	96	102	108	114	120	126	132
25	192.0	192.0	192.0	192.0	192.0	192.0	192.0	192.0	192.0	192.0	192.0	187.5	177.6	168.7	160.7	153.4
30	192.0	192.0	192.0	192.0	192.0	192.0	192.0	192.0	187.5	175.8	165.4	156.2	148.0	140.6	133.9	127.8
35	192.0	192.0	192.0	192.0	192.0	192.0	185.4	172.2	160.7	150.7	141.8	133.9	126.9	120.5	114.8	109.6
40	192.0	192.0	192.0	192.0	191.7	175.8	162.2	150.7	140.6	131.8	124.1	117.2	111.0	105.5	100.4	95.9
45	192.0	192.0	192.0	187.5	170.4	156.2	144.2	133.9	125.0	117.2	110.3	104.2	98.7	93.7	89.3	85.2
50	192.0	192.0	187.5	168.7	153.4	140.6	129.8	120.5	112.5	105.5	99.3	93.7	88.8	84.4	80.3	76.7
55	192.0	191.7	170.4	153.4	139.4	127.8	118.0	109.6	102.3	95.9	90.2	85.2	80.7	76.7	73.0	69.7
60	192.0	175.8	156.2	140.6	127.8	117.2	108.2	100.4	93.7	87.9	82.7	78.1	74.0	70.3	67.0	63.9
65	185.4	162.2	144.2	129.8	118.0	108.2	99.8	92.7	86.5	81.1	76.3	72.1	68.3	64.9	61.8	59.0
70	172.2	150.7	133.9	120.5	109.6	100.4	92.7	86.1	80.3	75.3	70.9	67.0	63.4	60.3	57.4	54.8
75	160.7	140.6	125.0	112.5	102.3	93.7	86.5	80.3	75.0	70.3	66.2	62.5	59.2	56.2	53.6	51.1
80	150.7	131.8	117.2	105.5	95.9	87.9	81.1	75.3	70.3	65.9	62.0	58.6	55.5	52.7	50.2	47.9
85	141.8	124.1	110.3	99.3	90.2	82.7	76.3	70.9	66.2	62.0	58.4	55.1	52.2	49.6	47.3	45.1
90	133.9	117.2	104.2	93.7	85.2	78.1	72.1	67.0	62.5	58.6	55.1	52.1	49.3	46.9	44.6	42.6
95	126.9	111.0	98.7	88.8	80.7	74.0	68.3	63.4	59.2	55.5	52.2	49.3	46.7	44.4	42.3	40.4
100	120.5	105.5	93.7	84.4	76.7	70.3	64.9	60.3	56.2	52.7	49.6	46.9	44.4	42.2	40.2	38.3
125	96.4	84.4	75.0	67.5	61.4	56.2	51.9	48.2	45.0	42.2	39.7	37.5	35.5	33.7	32.1	30.7
150	80.3	70.3	62.5	56.2	51.1	46.9	43.3	40.2	37.5	35.2	33.1	31.2	29.6	28.1	26.8	25.6
175	68.9	60.3	53.6	48.2	43.8	40.2	37.1	34.4	32.1	30.1	28.4	26.8	25.4	24.1	23.0	21.9
200	60.3	52.7	46.9	42.2	38.3	35.2	32.4	30.1	28.1	26.4	24.8	23.4	22.2	21.1	20.1	19.2
225	53.6	46.9	41.7	37.5	34.1	31.2	28.8	26.8	25.0	23.4	22.1	20.8	19.7	18.7	17.9	17.0
250	48.2	42.2	37.5	33.7	30.7	28.1	26.0	24.1	22.5	21.1	19.9	18.7	17.8	16.9	16.1	15.3
275	43.8	38.3	34.1	30.7	27.9	25.6	23.6	21.9	20.5	19.2	18.0	17.0	16.1	15.3	14.6	13.9

Roll-a-way By AMI
1661 GLENLAKE AVENUE
ITASCA, IL 60143

COPYRIGHT © 2008
QUALITAS MANUFACTURING INC.

DRAWING TITLE:

NOTICE OF ACCEPTANCE
END RETENTION - TDI
PRODUCT APPROVAL

D.L. Fowler
Professional Engineer
Texas License No.
PE 102913

DRAWN:	DF
DATE:	08-10-04
APPROVED:	DLF
DATE:	10-28-08
DRAWING NO:	3-01-035
SIZE: B	REV: B
SCALE:	1 : 10
SHEET:	20 OF 26

SCHEDULE 16

MAXIMUM ALLOWABLE 2 SPAN 5.875" HEADER WIDTH (TRACK TO TRACK) E-E (1), (2) AND (3) ATTACHMENT TO CONCRETE OR BUILD OUT

	STORM BAR HEIGHT UNDER HEADER															
PSF	42	48	54	60	66	72	78	84	90	96	102	108	114	120	126	132
25	240.0	240.0	234.3	223.5	214.1	205.9	198.6	192.0	186.1	180.7	175.7	171.2	167.0	163.1	159.5	156.1
30	240.0	227.6	215.9	205.9	197.2	189.5	182.8	176.7	171.2	166.2	161.6	157.4	153.6	150.0	146.6	143.5
35	225.5	212.4	201.4	192.0	183.8	176.7	170.3	164.6	159.5	154.8	150.5	146.6	143.0	139.6	136.5	133.6
40	212.4	200.0	189.5	180.7	173.0	166.2	160.2	154.8	150.0	145.6	141.5	137.8	134.4	131.2	128.3	125.5
45	201.4	189.5	179.6	171.2	163.9	157.4	151.7	146.6	142.0	137.8	134.0	130.5	127.2	124.2	121.4	118.8
50	192.0	180.7	171.2	163.1	156.1	150.0	144.5	139.6	135.2	131.2	127.6	124.2	121.1	118.3	115.6	113.1
55	183.8	172.9	163.8	156.1	149.4	143.5	138.2	133.6	129.3	125.5	122.0	118.8	115.8	113.1	110.5	108.1
60	176.6	166.1	157.4	149.9	143.4	137.8	132.7	128.2	124.2	120.5	117.1	114.0	111.2	108.5	106.1	103.8
65	170.2	160.1	151.6	144.4	138.2	132.7	127.9	123.5	119.6	116.0	112.8	109.8	107.1	104.5	102.1	99.9
70	164.5	154.7	146.5	139.5	133.5	128.2	123.5	119.3	115.5	112.1	108.9	106.0	103.4	100.9	98.6	96.5
75	159.3	149.8	141.9	135.1	129.2	124.1	119.6	115.5	111.8	108.5	105.4	102.6	100.1	97.7	95.5	93.4
80	154.6	145.4	137.6	131.1	125.4	120.4	116.0	112.0	108.5	105.2	102.3	99.6	97.0	94.7	92.6	90.6
85	150.3	141.3	133.8	127.4	121.9	117.0	112.7	108.9	105.4	102.3	99.4	96.7	94.3	92.1	90.0	88.0
90	146.4	137.6	130.3	124.0	118.6	113.9	109.7	106.0	102.6	99.5	96.7	94.1	91.8	89.6	87.5	85.6
95	142.7	134.2	127.0	120.9	115.7	111.0	107.0	103.3	100.0	97.0	94.3	91.8	89.4	87.3	85.3	83.5
100	139.4	131.0	124.0	118.1	112.9	108.4	104.4	100.8	97.6	94.7	92.0	89.6	87.3	85.2	83.3	81.3
125	125.6	118.0	111.7	106.3	101.6	97.6	94.0	90.7	87.8	85.2	82.8	79.5	75.3	71.6	68.2	65.1
150	115.3	108.3	102.5	97.5	93.2	89.5	86.2	83.2	79.5	74.6	70.2	66.3	62.8	59.6	56.8	54.2
175	107.2	100.7	95.3	90.7	86.7	83.2	78.7	73.0	68.2	63.9	60.1	56.8	53.8	51.1	48.7	46.5
200	100.7	94.6	89.5	85.1	81.3	74.6	68.8	63.9	59.6	55.9	52.6	49.7	47.1	44.7	42.6	40.7
225	95.3	89.4	84.6	79.5	72.3	66.3	61.2	56.8	53.0	49.7	46.8	44.2	41.9	39.8	37.9	36.2
250	90.6	85.1	79.5	71.6	65.1	59.6	55.1	51.1	47.7	44.7	42.1	39.8	37.7	35.8	34.1	32.5
275	86.6	81.3	72.3	65.1	59.2	54.2	50.1	46.5	43.4	40.7	38.3	36.2	34.2	32.5	31.0	29.6

SCHEDULE 17

MAXIMUM ALLOWABLE 3 SPAN 5.875" HEADER WIDTH (TRACK TO TRACK) E-E (1), (2) AND (3) ATTACHMENT TO CONCRETE OR BUILD OUT

	STORM BAR HEIGHT UNDER HEADER															
PSF	42	48	54	60	66	72	78	84	90	96	102	108	114	120	126	132
25	240.0	240.0	240.0	240.0	239.5	230.0	221.6	214.3	207.7	201.8	196.3	191.3	186.6	182.3	178.3	174.6
30	240.0	240.0	240.0	230.0	220.1	211.6	204.1	197.4	191.3	185.7	180.7	176.0	171.7	167.7	164.0	160.6
35	240.0	237.5	224.9	214.3	205.3	197.4	190.3	184.0	178.3	173.1	168.4	164.0	160.0	156.3	152.8	149.6
40	237.5	223.2	211.6	201.8	193.2	185.7	179.1	173.1	167.7	162.8	158.4	154.3	150.5	146.9	143.7	140.6
45	224.9	211.6	200.6	191.3	183.2	176.0	169.7	164.0	158.9	154.3	150.0	146.1	142.5	139.1	136.0	133.1
50	214.3	201.8	191.3	182.3	174.6	167.7	161.7	156.3	151.4	146.9	142.9	139.1	135.7	132.5	129.5	126.8
55	205.2	193.2	183.1	174.5	167.1	160.5	154.7	149.5	144.8	140.6	136.7	133.1	129.8	126.7	123.9	121.2
60	197.2	185.6	175.9	167.7	160.5	154.2	148.6	143.6	139.1	135.0	131.2	127.8	124.6	121.7	118.9	115.4
65	190.2	179.0	169.6	161.6	154.6	148.6	143.2	138.3	134.0	130.0	126.4	123.1	120.0	117.2	111.6	106.6
70	183.8	173.0	163.9	156.1	149.4	143.5	138.3	133.6	129.4	125.6	122.1	118.9	114.6	108.8	103.7	98.9
75	178.1	167.5	158.7	151.2	144.7	139.0	133.9	129.4	125.3	121.6	118.2	112.9	106.9	101.6	96.8	92.4
80	172.9	162.6	154.0	146.7	140.4	134.9	129.9	125.5	121.6	118.0	112.0	105.8	100.3	95.2	90.7	86.6
85	168.1	158.1	149.8	142.7	136.5	131.1	126.3	122.0	118.2	112.0	105.5	99.6	94.4	89.6	85.4	81.5
90	163.7	154.0	145.9	138.9	132.9	127.7	123.0	118.8	112.9	105.8	99.6	94.1	89.1	84.7	80.6	77.0
95	159.7	150.2	142.2	135.5	129.6	124.5	119.9	114.6	106.9	100.3	94.4	89.1	84.4	80.2	76.4	72.9
100	155.9	146.6	138.9	132.2	126.5	121.5	117.0	108.8	101.6	95.2	89.6	84.7	80.2	76.2	72.6	69.3
125	140.6	132.2	125.1	119.1	110.8	101.6	93.8	87.1	81.3	76.2	71.7	67.7	64.2	61.0	58.1	55.4
150	129.1	121.4	112.9	101.6	92.4	84.7	78.1	72.6	67.7	63.5	59.8	56.4	53.5	50.8	48.4	46.2
175	120.1	108.8	96.8	87.1	79.2	72.6	67.0	62.2	58.1	54.4	51.2	48.4	45.8	43.5	41.5	39.6
200	108.8	95.2	84.7	76.2	69.3	63.5	58.6	54.4	50.8	47.6	44.8	42.3	40.1	38.1	36.3	34.6
225	96.8	84.7	75.3	67.7	61.6	56.4	52.1	48.4	45.2	42.3	39.8	37.6	35.6	33.9	32.3	30.8
250	87.1	76.2	67.7	61.0	55.4	50.8	46.9	43.5	40.6	38.1	35.9	33.9	32.1	30.5	29.0	27.7
275	79.2	69.3	61.6	55.4	50.4	46.2	42.6	39.6	36.9	34.6	32.6	30.8	29.2	27.7	26.4	25.2

Roll-a-way By OMI
1661 GLENLAKE AVENUE
ITASCA, IL 60143

COPYRIGHT © 2008
QUALITAG MANUFACTURING INC.

DRAWING TITLE:

NOTICE OF ACCEPTANCE
END RETENTION - TDI
PRODUCT APPROVAL

D.L. Fowler
Professional Engineer
Texas License No.
PE 102913

11-24-10

DRAWN:	DF
DATE:	08-10-04
APPROVED:	DLF
DATE:	10-28-08
DRAWING NO:	3-01-035
SIZE: B	REV: -
SCALE:	1 : 10
SHEET:	20A OF 26

SCHEDULE 12A

MAXIMUM ALLOWABLE 2 SPAN 3.5" HEADER WIDTH (TRACK TO TRACK) E-E (1) ATTACHMENT TO WOOD

	STORM BAR HEIGHT UNDER HEADER															
PSF	42	48	54	60	66	72	78	84	90	96	102	108	114	120	126	132
25	182.0	171.0	161.8	154.0	147.3	141.4	136.2	131.5	127.3	123.5	120.0	116.8	113.8	111.1	108.5	106.1
30	167.1	157.0	148.6	141.4	135.2	129.8	124.9	120.6	116.8	113.2	110.0	107.1	104.4	101.8	99.5	97.3
35	155.5	146.1	138.2	131.5	125.7	120.6	116.1	112.1	108.5	105.2	102.2	99.5	97.0	94.6	92.4	90.4
40	146.1	137.2	129.8	123.5	118.0	113.2	109.0	105.2	101.8	98.8	95.9	93.4	91.0	88.8	86.7	84.8
45	138.2	129.8	122.7	116.8	111.6	107.1	103.1	99.5	96.3	93.4	90.7	88.3	86.0	83.9	82.0	80.2
50	131.5	123.5	116.8	111.1	106.1	101.8	98.0	94.6	91.6	88.8	86.2	83.9	81.8	79.8	77.9	76.2
55	125.7	118.0	111.6	106.1	101.4	97.3	93.7	90.4	87.5	84.8	82.4	80.2	78.1	76.2	74.4	72.8
60	120.6	113.2	107.1	101.8	97.3	93.3	89.8	86.7	83.9	81.3	79.0	76.9	74.9	73.1	71.4	69.8
65	116.1	109.0	103.0	98.0	93.6	89.8	86.5	83.4	80.7	78.3	76.0	74.0	72.1	70.3	68.7	67.2
70	112.1	105.2	99.5	94.6	90.4	86.7	83.4	80.5	77.9	75.5	73.4	71.4	69.5	67.8	66.3	64.8
75	108.5	101.8	96.2	91.5	87.4	83.9	80.7	77.9	75.4	73.1	71.0	69.0	67.3	65.6	64.1	62.7
80	105.2	98.7	93.3	88.7	84.8	81.3	78.2	75.5	73.1	70.8	68.8	66.9	65.2	63.6	62.1	60.8
85	102.2	95.9	90.6	86.2	82.3	79.0	76.0	73.3	71.0	68.8	66.8	65.0	63.3	61.8	60.3	59.0
90	99.4	93.3	88.2	83.9	80.1	76.8	73.9	71.4	69.0	66.9	65.0	63.2	61.6	60.1	58.7	56.8
95	96.9	90.9	85.9	81.7	78.1	74.9	72.0	69.5	67.2	65.2	63.3	61.6	60.0	58.5	56.4	53.8
100	94.5	88.7	83.8	79.7	76.1	73.0	70.3	67.8	65.6	63.6	61.8	60.1	58.5	56.2	53.5	51.1
125	85.0	79.7	75.3	71.6	68.4	65.6	63.1	60.9	58.9	56.2	52.9	50.0	47.3	45.0	42.8	40.9
150	77.8	73.0	69.0	65.6	62.6	60.1	57.7	53.5	50.0	46.8	44.1	41.6	39.5	37.5	35.7	34.1
175	72.3	67.8	64.0	60.9	58.1	53.5	49.4	45.9	42.8	40.2	37.8	35.7	33.8	32.1	30.6	29.2
200	67.7	63.5	60.0	56.2	51.1	46.8	43.2	40.2	37.5	35.1	33.1	31.2	29.6	28.1	26.8	25.6
225	64.0	60.0	55.5	50.0	45.4	41.6	38.4	35.7	33.3	31.2	29.4	27.8	26.3	25.0	23.8	22.7
250	60.8	56.2	50.0	45.0	40.9	37.5	34.6	32.1	30.0	28.1	26.5	25.0	23.7	22.5	21.4	20.4
275	58.1	51.1	45.4	40.9	37.2	34.1	31.5	29.2	27.3	25.6	24.1	22.7	21.5	20.4	19.5	18.6

SCHEDULE 13A

MAXIMUM ALLOWABLE 3 SPAN 3.5" HEADER WIDTH (TRACK TO TRACK) E-E (1) ATTACHMENT TO WOOD

	STORM BAR HEIGHT UNDER HEADER															
PSF	42	48	54	60	66	72	78	84	90	96	102	108	114	120	126	132
25	184.6	176.6	169.8	163.9	158.8	154.3	150.2	146.5	142.8	138.5	134.6	131.0	127.7	124.7	121.8	119.2
30	173.7	166.2	159.8	154.3	149.4	145.2	140.2	135.4	131.0	127.1	123.5	120.2	117.2	114.4	111.8	109.3
35	165.0	157.8	151.8	146.5	141.0	135.4	130.4	125.9	121.8	118.2	114.8	111.8	108.9	106.3	103.9	101.6
40	157.8	151.0	145.2	138.5	132.4	127.1	122.4	118.2	114.4	110.9	107.8	104.9	102.2	99.8	97.5	95.3
45	151.8	145.2	137.7	131.0	125.3	120.2	115.8	111.8	108.2	104.9	101.9	99.2	96.6	94.3	92.1	90.1
50	146.5	138.5	131.0	124.7	119.2	114.4	110.1	106.3	102.9	99.8	96.9	94.3	91.9	89.7	87.6	85.7
55	141.0	132.4	125.3	119.2	113.9	109.3	105.2	101.6	98.3	95.3	92.6	90.1	87.8	85.7	82.9	79.1
60	135.3	127.1	120.2	114.3	109.3	104.9	100.9	97.4	94.3	91.4	88.8	86.4	84.0	79.8	76.0	72.5
65	130.3	122.4	115.7	110.1	105.2	100.9	97.2	93.8	90.8	88.0	85.5	81.8	77.5	73.7	70.1	67.0
70	125.8	118.1	111.7	106.3	101.5	97.4	93.8	90.5	87.6	84.9	80.5	76.0	72.0	68.4	65.1	62.2
75	121.8	114.3	108.1	102.8	98.3	94.3	90.7	87.6	84.7	79.8	75.1	70.9	67.2	63.8	60.8	58.0
80	118.1	110.8	104.8	99.7	95.3	91.4	88.0	84.9	79.8	74.8	70.4	66.5	63.0	59.8	57.0	54.4
85	114.7	107.7	101.8	96.9	92.5	88.8	85.4	80.5	75.1	70.4	66.3	62.6	59.3	56.3	53.6	51.2
90	111.7	104.8	99.1	94.2	90.1	86.4	81.8	76.0	70.9	66.5	62.6	59.1	56.0	53.2	50.7	48.4
95	108.8	102.1	96.6	91.8	87.7	84.0	77.5	72.0	67.2	63.0	59.3	56.0	53.0	50.4	48.0	45.8
100	106.2	99.7	94.2	89.6	85.6	79.8	73.7	68.4	63.8	59.8	56.3	53.2	50.4	47.9	45.6	43.5
125	95.5	89.6	84.7	76.6	69.6	63.8	58.9	54.7	51.1	47.9	45.1	42.6	40.3	38.3	36.5	34.8
150	87.5	79.8	70.9	63.8	58.0	53.2	49.1	45.6	42.6	39.9	37.5	35.5	33.6	31.9	30.4	29.0
175	78.2	68.4	60.8	54.7	49.7	45.6	42.1	39.1	36.5	34.2	32.2	30.4	28.8	27.4	26.1	24.9
200	68.4	59.8	53.2	47.9	43.5	39.9	36.8	34.2	31.9	29.9	28.2	26.6	25.2	23.9	22.8	21.8
225	60.8	53.2	47.3	42.6	38.7	35.5	32.7	30.4	28.4	26.6	25.0	23.6	22.4	21.3	20.3	19.3
250	54.7	47.9	42.6	38.3	34.8	31.9	29.5	27.4	25.5	23.9	22.5	21.3	20.2	19.1	18.2	17.4
275	49.7	43.5	38.7	34.8	31.7	29.0	26.8	24.9	23.2	21.8	20.5	19.3	18.3	17.4	16.6	15.8

SCHEDULE 14A

MAXIMUM ALLOWABLE 2 SPAN 3.5" HEADER WIDTH (TRACK TO TRACK) E-E (1) ATTACHMENT TO BLOCK

	STORM BAR HEIGHT UNDER HEADER															
PSF	42	48	54	60	66	72	78	84	90	96	102	108	114	120	126	132
25	182.0	171.0	161.8	154.0	147.3	141.4	136.2	131.5	127.3	123.5	120.0	116.8	113.8	111.1	108.5	106.1
30	167.1	157.0	148.6	141.4	135.2	129.8	124.9	120.6	116.8	113.2	110.0	107.1	104.4	101.8	99.5	97.3
35	155.5	146.1	138.2	131.5	125.7	120.6	116.1	112.1	108.5	105.2	102.2	99.5	97.0	94.6	92.4	90.4
40	146.1	137.2	129.8	123.5	118.0	113.2	109.0	105.2	101.8	98.8	95.9	93.4	91.0	88.8	86.7	84.8
45	138.2	129.8	122.7	116.8	111.6	107.1	103.1	99.5	96.3	93.4	90.7	88.3	86.0	83.9	82.0	80.2
50	131.5	123.5	116.8	111.1	106.1	101.8	98.0	94.6	91.6	88.8	86.2	83.9	81.8	79.8	77.9	76.2
55	125.7	118.0	111.6	106.1	101.4	97.3	93.7	90.4	87.5	84.8	82.4	80.2	78.1	76.2	74.4	72.8
60	120.6	113.2	107.1	101.8	97.3	93.3	89.8	86.7	83.9	81.3	79.0	76.9	74.9	73.1	71.4	69.8
65	116.1	109.0	103.0	98.0	93.6	89.8	86.5	83.4	80.7	78.3	76.0	74.0	72.1	70.3	68.7	67.2
70	112.1	105.2	99.5	94.6	90.4	86.7	83.4	80.5	77.9	75.5	73.4	71.4	69.5	67.8	66.3	64.3
75	108.5	101.8	96.2	91.5	87.4	83.9	80.7	77.9	75.4	73.1	71.0	69.0	67.3	65.6	62.9	60.0
80	105.2	98.7	93.3	88.7	84.8	81.3	78.2	75.5	73.1	70.8	68.8	66.9	65.2	61.9	59.0	56.3
85	102.2	95.9	90.6	86.2	82.3	79.0	76.0	73.3	71.0	68.8	66.8	64.8	61.3	58.3	55.5	53.0
90	99.4	93.3	88.2	83.9	80.1	76.8	73.9	71.4	69.0	66.9	64.8	61.2	57.9	55.0	52.4	50.0
95	96.9	90.9	85.9	81.7	78.1	74.9	72.0	69.5	67.2	65.2	61.3	57.9	54.9	52.1	49.7	47.4
100	94.5	88.7	83.8	79.7	76.1	73.0	70.3	67.8	65.6	61.9	58.3	55.0	52.1	49.5	47.2	45.0
125	85.0	79.7	75.3	71.6	68.4	65.6	61.0	56.6	52.8	49.5	46.6	44.0	41.7	39.6	37.7	36.0
150	77.8	73.0	69.0	65.6	60.0	55.0	50.8	47.2	44.0	41.3	38.9	36.7	34.8	33.0	31.5	30.0
175	72.3	67.8	62.9	56.6	51.5	47.2	43.5	40.4	37.7	35.4	33.3	31.5	29.8	28.3	27.0	25.7
200	67.7	61.9	55.0	49.5	45.0	41.3	38.1	35.4	33.0	31.0	29.1	27.5	26.1	24.8	23.6	22.5
225	62.9	55.0	48.9	44.0	40.0	36.7	33.9	31.5	29.4	27.5	25.9	24.5	23.2	22.0	21.0	20.0
250	56.6	49.5	44.0	39.6	36.0	33.0	30.5	28.3	26.4	24.8	23.3	22.0	20.9	19.8	18.9	18.0
275	51.5	45.0	40.0	36.0	32.8	30.0	27.7	25.7	24.0	22.5	21.2	20.0	19.0	18.0	17.2	16.4

SCHEDULE 15A

MAXIMUM ALLOWABLE 3 SPAN 3.5" HEADER WIDTH (TRACK TO TRACK) E-E (1) ATTACHMENT TO BLOCK

	STORM BAR HEIGHT UNDER HEADER															
PSF	42	48	54	60	66	72	78	84	90	96	102	108	114	120	126	132
25	184.6	176.6	169.8	163.9	158.8	154.3	150.2	146.5	142.8	138.5	134.6	131.0	127.7	124.7	121.8	119.2
30	173.7	166.2	159.8	154.3	149.4	145.2	140.2	135.4	131.0	127.1	123.5	120.2	117.2	114.4	111.8	109.3
35	165.0	157.8	151.8	146.5	141.0	135.4	130.4	125.9	121.8	118.2	114.8	111.8	108.9	106.3	103.9	101.6
40	157.8	151.0	145.2	138.5	132.4	127.1	122.4	118.2	114.4	110.9	107.8	104.9	102.2	99.8	97.5	95.3
45	151.8	145.2	137.7	131.0	125.3	120.2	115.8	111.8	108.2	104.9	101.9	99.2	96.6	93.7	89.3	85.2
50	146.5	138.5	131.0	124.7	119.2	114.4	110.1	106.3	102.9	99.8	96.9	93.7	88.8	84.4	80.3	76.7
55	141.0	132.4	125.3	119.2	113.9	109.3	105.2	101.6	98.3	95.3	90.2	85.2	80.7	76.7	73.0	69.7
60	135.3	127.1	120.2	114.3	109.3	104.9	100.9	97.4	93.7	87.9	82.7	78.1	74.0	70.3	67.0	63.9
65	130.3	122.4	115.7	110.1	105.2	100.9	97.2	92.7	86.5	81.1	76.3	72.1	68.3	64.9	61.8	59.0
70	125.8	118.1	111.7	106.3	101.5	97.4	92.7	86.1	80.3	75.3	70.9	67.0	63.4	60.3	57.4	54.8
75	121.8	114.3	108.1	102.8	98.3	93.7	86.5	80.3	75.0	70.3	66.2	62.5	59.2	56.2	53.6	51.1
80	118.1	110.8	104.8	99.7	95.3	87.9	81.1	75.3	70.3	65.9	62.0	58.6	55.5	52.7	50.2	47.9
85	114.7	107.7	101.8	96.9	90.2	82.7	76.3	70.9	66.2	62.0	58.4	55.1	52.2	49.6	47.3	45.1
90	111.7	104.8	99.1	93.7	85.2	78.1	72.1	67.0	62.5	58.6	55.1	52.1	49.3	46.9	44.6	42.6
95	108.8	102.1	96.6	88.8	80.7	74.0	68.3	63.4	59.2	55.5	52.2	49.3	46.7	44.4	42.3	40.4
100	106.2	99.7	93.7	84.4	76.7	70.3	64.9	60.3	56.2	52.7	49.6	46.9	44.4	42.2	40.2	38.3
125	95.5	84.4	75.0	67.5	61.4	56.2	51.9	48.2	45.0	42.2	39.7	37.5	35.5	33.7	32.1	30.7
150	80.3	70.3	62.5	56.2	51.1	46.9	43.3	40.2	37.5	35.2	33.1	31.2	29.6	28.1	26.8	25.6
175	68.9	60.3	53.6	48.2	43.8	40.2	37.1	34.4	32.1	30.1	28.4	26.8	25.4	24.1	23.0	21.9
200	60.3	52.7	46.9	42.2	38.3	35.2	32.4	30.1	28.1	26.4	24.8	23.4	22.2	21.1	20.1	19.2
225	53.6	46.9	41.7	37.5	34.1	31.2	28.8	26.8	25.0	23.4	22.1	20.8	19.7	18.7	17.9	17.0
250	48.2	42.2	37.5	33.7	30.7	28.1	26.0	24.1	22.5	21.1	19.9	18.7	17.8	16.9	16.1	15.3
275	43.8	38.3	34.1	30.7	27.9	25.6	23.6	21.9	20.5	19.2	18.0	17.0	16.1	15.3	14.6	13.9

Roll-a-way By QMI
1661 GLENLAKE AVENUE
ITASCA, IL 60143

COPYRIGHT © 2008
QUALITAS MANUFACTURING INC.

DRAWING TITLE:

NOTICE OF ACCEPTANCE
END RETENTION - TDI
PRODUCT APPROVAL

D.L. Fowler
Professional Engineer
Texas License No.
PE-102913

DRAWN:	DF
DATE:	08-10-04
APPROVED:	DLF
DATE:	10-28-08
DRAWING NO:	3-01-035
SIZE: B	REV: -
SCALE:	1 : 10
SHEET:	20B OF 26

SCHEDULE 16A

MAXIMUM ALLOWABLE 2 SPAN 3.5 HEADER WIDTH (TRACK TO TRACK) E-E (1), (2) AND (3) ATTACHMENT TO CONCRETE OR BUILD OUT

	STORM BAR HEIGHT UNDER HEADER															
PSF	42	48	54	60	66	72	78	84	90	96	102	108	114	120	126	132
25	182.0	171.0	161.8	154.0	147.3	141.4	136.2	131.5	127.3	123.5	120.0	116.8	113.8	111.1	108.5	106.1
30	167.1	157.0	148.6	141.4	135.2	129.8	124.9	120.6	116.8	113.2	110.0	107.1	104.4	101.8	99.5	97.3
35	155.5	146.1	138.2	131.5	125.7	120.6	116.1	112.1	108.5	105.2	102.2	99.5	97.0	94.6	92.4	90.4
40	146.1	137.2	129.8	123.5	118.0	113.2	109.0	105.2	101.8	98.8	95.9	93.4	91.0	88.8	86.7	84.8
45	138.2	129.8	122.7	116.8	111.6	107.1	103.1	99.5	96.3	93.4	90.7	88.3	86.0	83.9	82.0	80.2
50	131.5	123.5	116.8	111.1	106.1	101.8	98.0	94.6	91.6	88.8	86.2	83.9	81.8	79.8	77.9	76.2
55	125.7	118.0	111.6	106.1	101.4	97.3	93.7	90.4	87.5	84.8	82.4	80.2	78.1	76.2	74.4	72.8
60	120.6	113.2	107.1	101.8	97.3	93.3	89.8	86.7	83.9	81.3	79.0	76.9	74.9	73.1	71.4	69.8
65	116.1	109.0	103.0	98.0	93.6	89.8	86.5	83.4	80.7	78.3	76.0	74.0	72.1	70.3	68.7	67.2
70	112.1	105.2	99.5	94.6	90.4	86.7	83.4	80.5	77.9	75.5	73.4	71.4	69.5	67.8	66.3	64.8
75	108.5	101.8	96.2	91.5	87.4	83.9	80.7	77.9	75.4	73.1	71.0	69.0	67.3	65.6	64.1	62.7
80	105.2	98.7	93.3	88.7	84.8	81.3	78.2	75.5	73.1	70.8	68.8	66.9	65.2	63.6	62.1	60.8
85	102.2	95.9	90.6	86.2	82.3	79.0	76.0	73.3	71.0	68.8	66.8	65.0	63.3	61.8	60.3	59.0
90	99.4	93.3	88.2	83.8	80.1	76.8	73.9	71.3	69.0	66.9	65.0	63.2	61.6	60.1	58.7	57.4
95	96.9	90.9	85.9	81.7	78.0	74.9	72.0	69.5	67.2	65.2	63.3	61.6	60.0	58.5	57.2	55.9
100	94.5	88.7	83.8	79.7	76.1	73.0	70.3	67.8	65.6	63.6	61.8	60.1	58.5	57.1	55.8	54.5
125	85.0	79.7	75.3	71.6	68.4	65.6	63.1	60.9	58.9	57.1	55.4	53.9	52.5	51.3	50.1	48.9
150	77.8	73.0	69.0	65.6	62.6	60.1	57.8	55.8	53.9	52.3	50.8	49.4	48.1	46.9	45.7	44.7
175	72.3	67.8	64.0	60.9	58.1	55.7	53.6	51.7	50.0	48.5	47.1	45.7	44.5	43.4	42.3	41.4
200	67.8	63.6	60.0	57.1	54.5	52.3	50.3	48.5	46.9	45.4	44.0	42.8	41.6	40.6	39.6	38.7
225	64.0	60.0	56.7	53.9	51.5	49.4	47.5	45.7	44.2	42.8	41.5	40.3	39.3	38.3	37.3	36.2
250	60.9	57.1	53.9	51.2	48.9	46.9	45.0	43.4	41.9	40.6	39.4	38.3	37.2	35.8	34.1	32.5
275	58.1	54.5	51.5	48.9	46.7	44.7	42.9	41.4	40.0	38.7	37.5	36.2	34.2	32.5	31.0	29.6

SCHEDULE 17A

MAXIMUM ALLOWABLE 3 SPAN 3.5 HEADER WIDTH (TRACK TO TRACK) E-E (1), (2) AND (3) ATTACHMENT TO CONCRETE OR BUILD OUT

	STORM BAR HEIGHT UNDER HEADER															
PSF	42	48	54	60	66	72	78	84	90	96	102	108	114	120	126	132
25	185.0	177.0	170.0	163.0	157.0	152.0	147.0	144.0	141.0	139.0	138.0	135.0	132.6	129.2	126.1	123.2
30	173.0	166.0	160.0	154.0	148.0	145.0	142.0	138.0	134.0	131.9	127.9	124.3	121.0	118.0	115.1	112.5
35	164.0	158.0	152.0	146.0	142.0	138.0	133.0	130.5	126.1	122.1	118.4	115.1	112.0	109.2	106.6	104.1
40	158.0	151.0	145.0	140.0	135.0	131.9	126.7	122.1	118.0	114.2	110.8	107.7	104.8	102.1	99.7	97.4
45	151.0	145.0	140.0	134.0	129.9	124.3	119.5	115.1	111.2	107.7	104.5	101.5	98.8	96.3	94.0	91.8
50	147.0	140.0	135.0	129.2	123.2	118.0	113.3	109.2	105.5	102.1	99.1	96.3	93.7	91.4	89.2	87.1
55	142.0	136.0	129.9	123.2	117.5	112.5	108.0	104.1	100.6	97.4	94.5	91.8	89.4	87.1	85.0	83.1
60	138.0	131.9	124.3	118.0	112.5	107.7	103.4	99.7	96.3	93.2	90.5	87.9	85.6	83.4	81.4	79.5
65	133.0	126.7	119.5	113.3	108.0	103.4	99.4	95.8	92.5	89.6	86.9	84.5	82.2	80.1	78.2	76.4
70	130.5	122.1	115.1	109.2	104.1	99.7	95.8	92.3	89.2	86.3	83.8	81.4	79.2	77.2	75.4	73.6
75	126.1	118.0	111.2	105.5	100.6	96.3	92.5	89.2	86.1	83.4	80.9	78.6	76.5	74.6	72.8	71.1
80	122.1	114.2	107.7	102.1	97.4	93.2	89.6	86.3	83.4	80.8	78.3	76.1	74.1	72.2	70.5	68.9
85	118.4	110.8	104.5	99.1	94.5	90.5	86.9	83.8	80.9	78.3	76.0	73.9	71.9	70.1	68.4	66.8
90	115.1	107.7	101.5	96.3	91.8	87.9	84.5	81.4	78.6	76.1	73.9	71.8	69.9	68.1	66.5	64.9
95	112.0	104.8	98.8	93.7	89.4	85.6	82.2	79.2	76.5	74.1	71.9	69.9	68.0	66.3	64.7	63.2
100	109.2	102.1	96.3	91.4	87.1	83.4	80.1	77.2	74.6	72.2	70.1	68.1	66.3	64.6	63.0	61.6
125	97.7	91.4	86.1	81.7	77.9	74.6	71.7	69.1	66.7	64.6	62.7	60.9	59.3	57.8	56.4	55.1
150	89.2	83.4	78.6	74.6	71.1	68.1	65.4	63.0	60.9	59.0	57.2	55.6	53.5	50.8	48.4	46.2
175	82.5	77.2	72.8	69.1	65.9	63.0	60.6	58.4	56.4	54.4	51.2	48.4	45.8	43.5	41.5	39.6
200	77.2	72.2	68.1	64.6	61.6	59.0	56.7	54.4	50.8	47.6	44.8	42.3	40.1	38.1	36.3	34.6
225	72.8	68.1	64.2	60.9	58.1	55.6	52.1	48.4	45.1	42.3	39.8	37.6	35.6	33.9	32.2	30.8
250	69.1	64.6	60.9	57.8	55.1	50.8	46.9	43.5	40.6	38.1	35.9	33.9	32.1	30.5	29.0	27.7
275	65.9	61.6	58.1	55.1	50.4	46.2	42.6	39.6	36.9	34.6	32.6	30.8	29.2	27.7	26.4	25.2

Roll-a-way By QMI
1661 GLENLAKE AVENUE
ITASCA, IL 60143

COPYRIGHT © 2008
QUALITAS MANUFACTURING INC.

DRAWING TITLE:

NOTICE OF ACCEPTANCE
END RETENTION - TDI
PRODUCT APPROVAL

D.L. Fowler
Professional Engineer
Texas License No.
PE 102913

DRAWN:	DF
DATE:	08-10-04
APPROVED:	DLF
DATE:	10-28-08
DRAWING NO:	3-01-035
SIZE: B	REV: -
SCALE:	1 : 10
SHEET:	20C OF 26

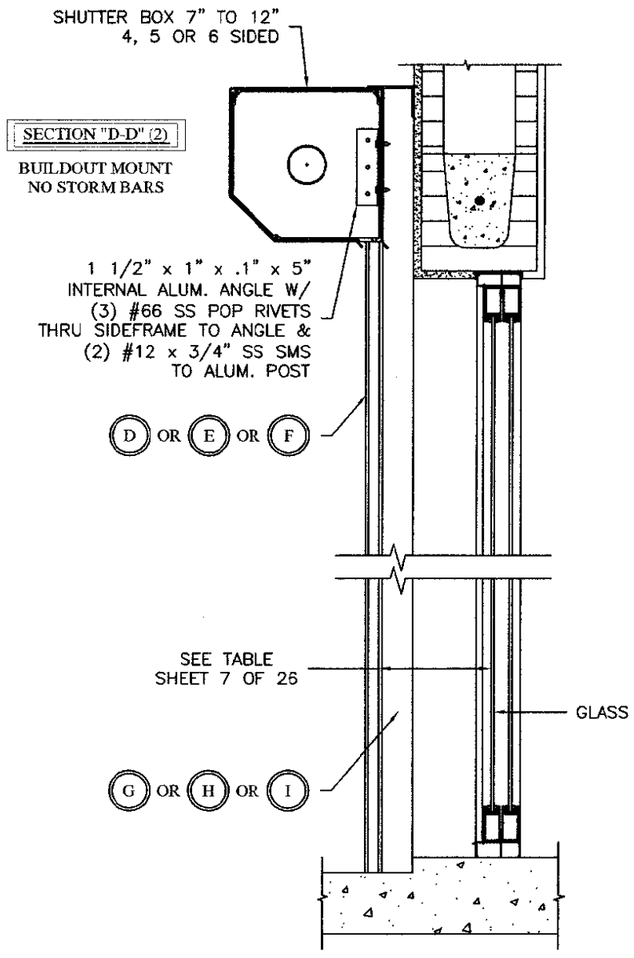

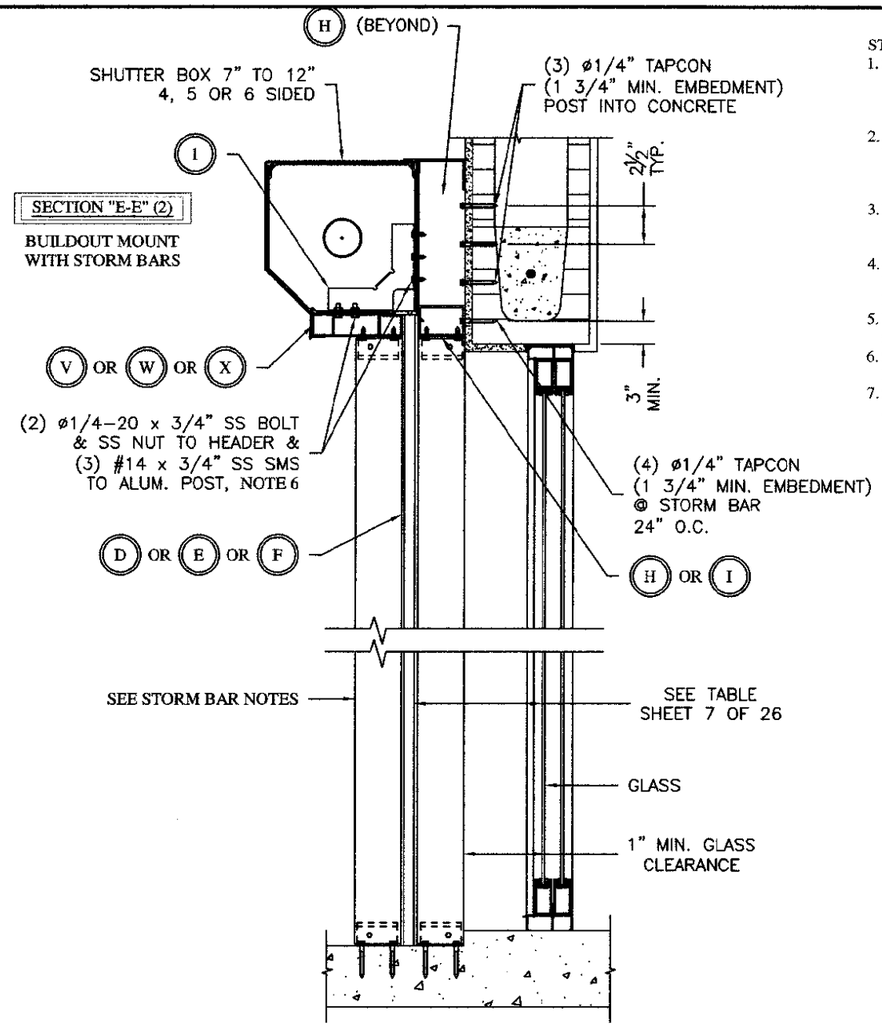

STORM BAR NOTES:

1. SHUTTER SECTIONS ARE SHOWN WITH FIXED STORM BARS. STORM BARS CAN BE FIXED OR REMOVABLE, REMOVABLE (SPRING-LOADED) STORM BAR ASSEMBLIES & MOUNTING ARE SHOWN ON SHEET 17, 18, & 4A OF 26.
2. SHUTTER(S) SHOULD NOT BE ROLLED DOWN DURING WIND EVENTS WITHOUT REMOVABLE STORM BARS IN PLACE. ROLL-A-WAY IS NOT RESPONSIBLE FOR SUBSEQUENT DAMAGE.
3. REMOVING SPRING-LOADED STORM BARS: REMOVE PIN, LIFT UP ON STORM BAR, WHEN BOTTOM FEET CLEAR THE STORM BAR BASE PLATE, ROTATE STORM BAR OUT OF OPENING.
4. SHUTTERS WITH NO STORM BARS, OVER 72" WIDE SHOULD USE SOME FORM OF HOOD SUPPORT, HEADER, TUBING OR EXTERNAL SUPPORT.
5. FOR LARGER ALLOWABLE HEADER SPANS USE EXTERIOR REINFORCEMENT BRACKET SHOWN ON SHEET 25 OF 26.
6. SEE ALTERNATE SPANS USING Ø1/4-20 BOLT & NUT PER DETAIL "E-E" (4) SHEET 23 OF 26.
7. SEE 2 SPAN AND 3 SPAN MAXIMUM ALLOWABLE HEADER SPANS E-E(2) ON PAGES 20A & 20C OF 26.

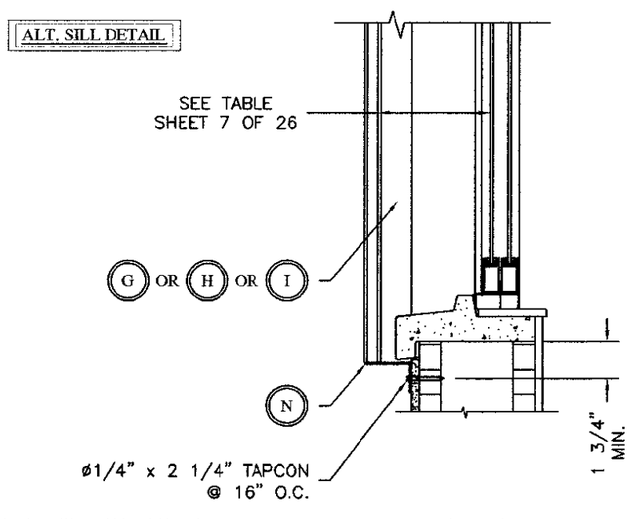

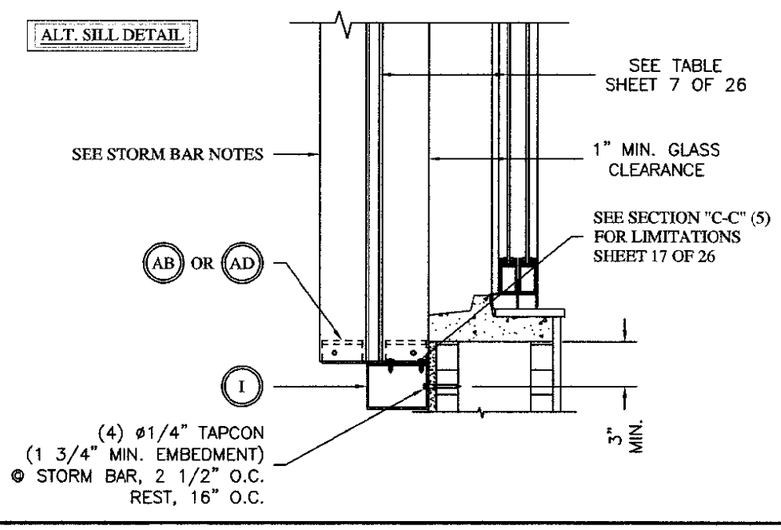

Roll-a-way By AMI
1661 GLENLAKE AVENUE
ITASCA, IL 60143
COPYRIGHT © 2008
QUALITAS MANUFACTURING INC.

DRAWING TITLE:
NOTICE OF ACCEPTANCE
END RETENTION - TDI
PRODUCT APPROVAL

D.L. Fowler
Professional Engineer
Texas License No.
PE 102913

DRAWN:	DF
DATE:	08-10-04
APPROVED:	DLF
DATE:	10-28-08
DRAWING NO:	3-01-035
SIZE: B	REV: B
SCALE:	1 : 10
SHEET:	21 OF 26

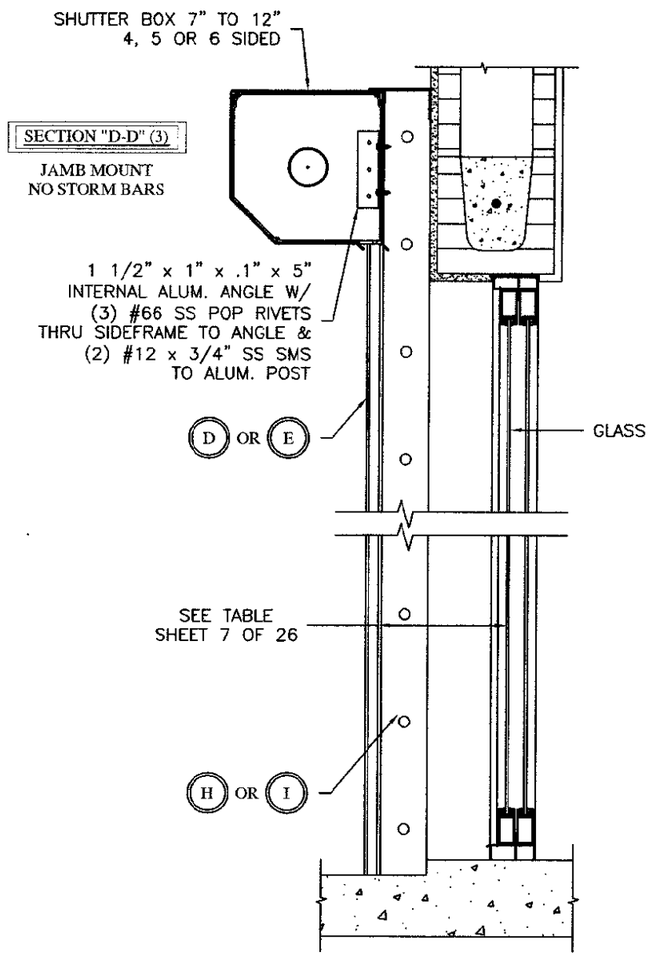

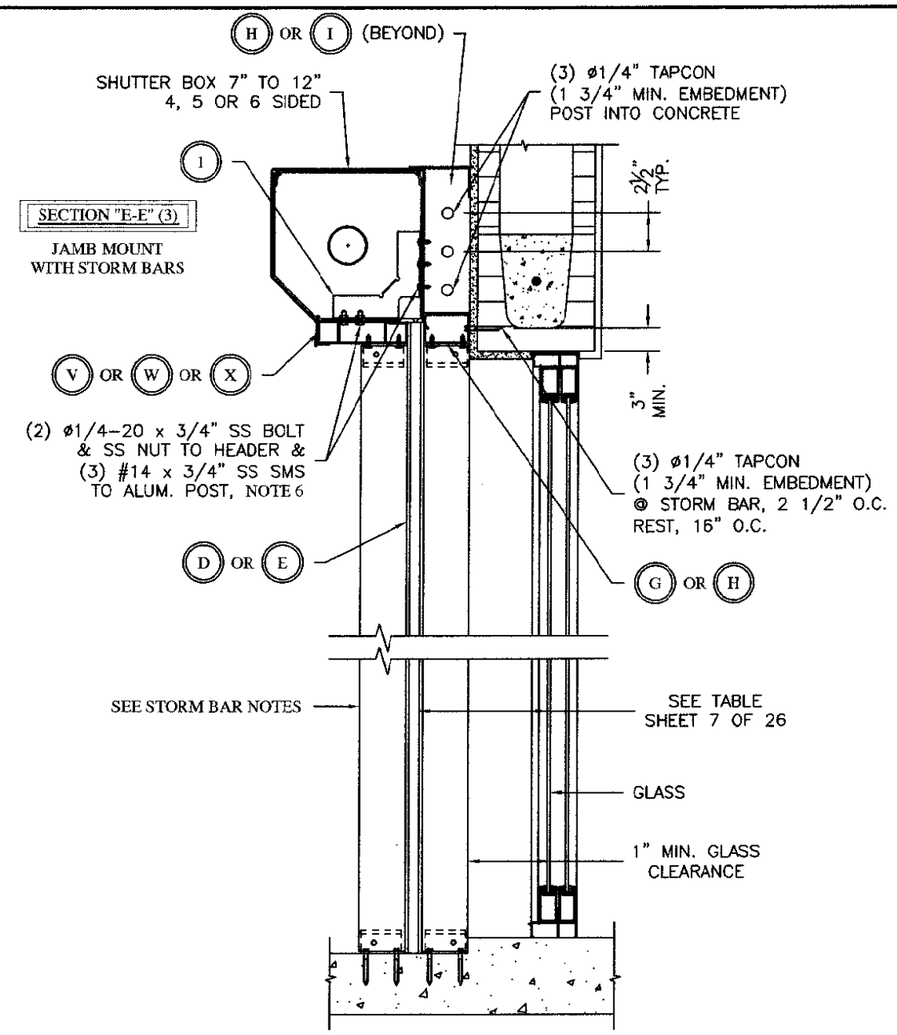

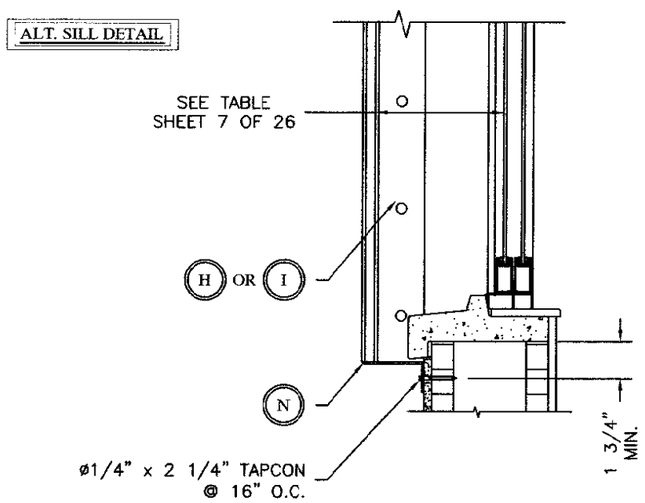

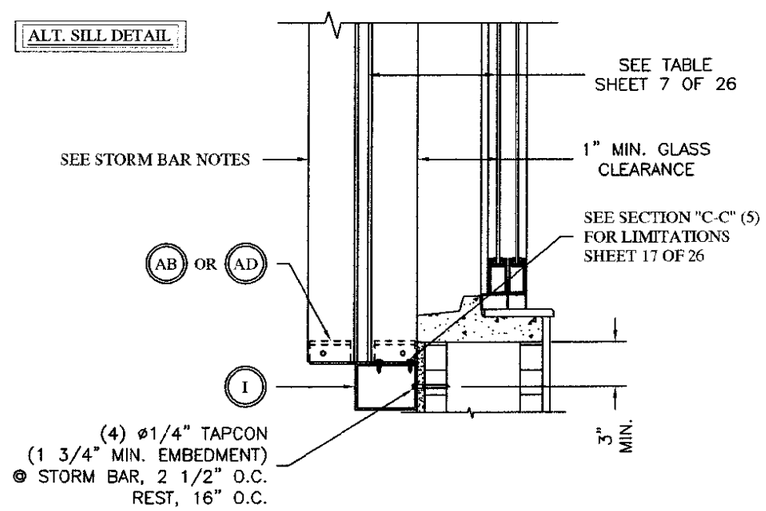

STORM BAR NOTES:

1. SHUTTER SECTIONS ARE SHOWN WITH FIXED STORM BARS. STORM BARS CAN BE FIXED OR REMOVABLE, REMOVABLE (SPRING-LOADED) STORM BAR ASSEMBLIES & MOUNTING ARE SHOWN ON SHEET 17, 18, & 4A OF 26.
2. SHUTTER(S) SHOULD NOT BE ROLLED DOWN DURING WIND EVENTS WITHOUT REMOVABLE STORM BARS IN PLACE. ROLL-A-WAY IS NOT RESPONSIBLE FOR SUBSEQUENT DAMAGE.
3. REMOVING SPRING-LOADED STORM BARS: REMOVE PIN, LIFT UP ON STORM BAR, WHEN BOTTOM FEET CLEAR THE STORM BAR BASE PLATE, ROTATE STORM BAR OUT OF OPENING.
4. SHUTTERS WITH NO STORM BARS OVER 72" WIDE SHOULD USE SOME FORM OF HOOD SUPPORT, HEADER, TUBING OR EXTERNAL SUPPORT.
5. FOR LARGER ALLOWABLE HEADER SPANS USE EXTERIOR REINFORCEMENT BRACKET SHOWN ON SHEET 24 OF 26.
6. SEE ALTERNATE SPANS USING Ø1/4-20 BOLT & NUT PER DETAIL "E-E" (4) SHEET 23 OF 26 ("W" AND "X" HEADERS ONLY).
7. SEE 2 SPAN AND 3 SPAN MAXIMUM ALLOWABLE HEADER SPANS E-E (3)ON PAGES 20A & 20C OF 26.

Roll-a-way By OMI
1661 GLENLAKE AVENUE
ITASCA, IL 60143
COPYRIGHT © 2008
QUALITAS MANUFACTURING INC.

DRAWING TITLE:
NOTICE OF ACCEPTANCE
END RETENTION - TDI
PRODUCT APPROVAL

D.L. Fowler
Professional Engineer
Texas License No.
PE 102913

DRAWN:	DF
DATE:	08-10-04
APPROVED:	DLF
DATE:	10-28-08
DRAWING NO:	3-01-035
SIZE: B	REV: B
SCALE:	1 : 10
SHEET:	22 OF 26

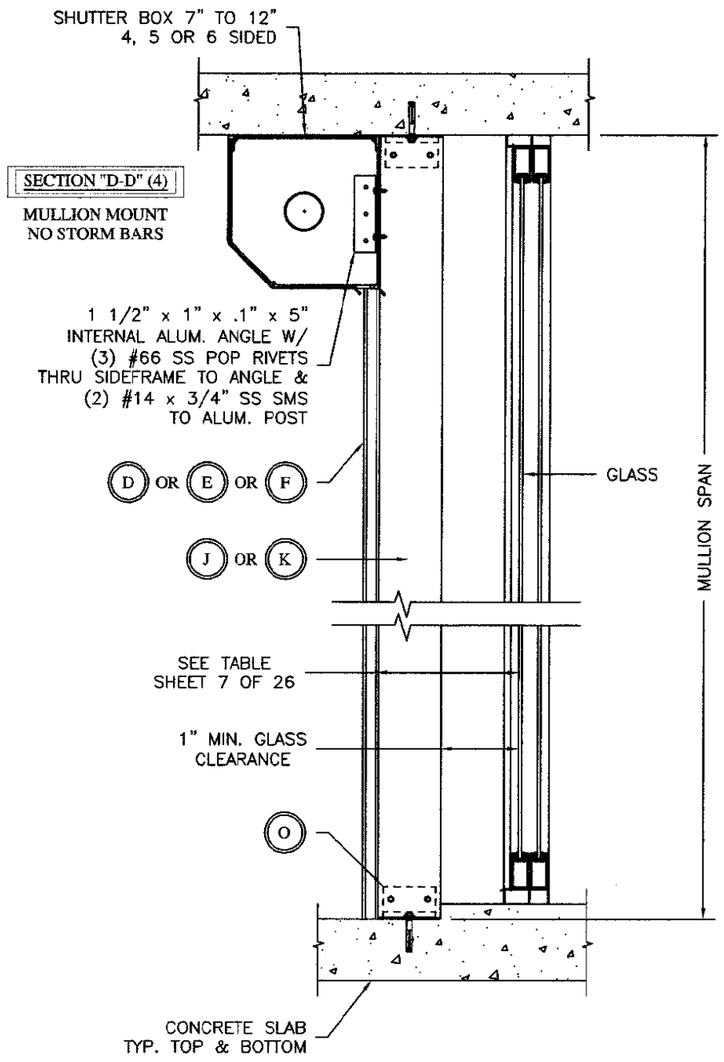

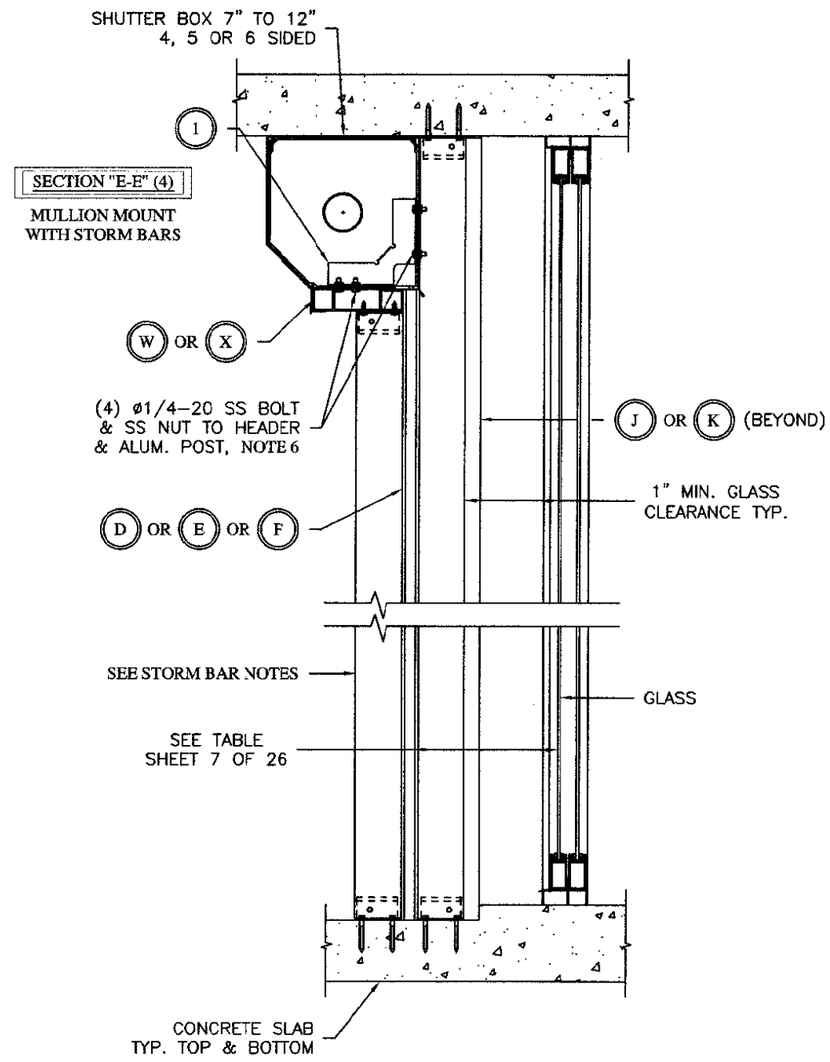

STORM BAR NOTES:

1. SHUTTER SECTIONS ARE SHOWN WITH FIXED STORM BARS. STORM BARS CAN BE FIXED OR REMOVABLE, REMOVABLE (SPRING-LOADED) STORM BAR ASSEMBLIES & MOUNTING ARE SHOWN ON SHEET 17, 18, & 4A OF 26.
2. SHUTTER(S) SHOULD NOT BE ROLLED DOWN DURING WIND EVENTS WITHOUT REMOVABLE STORM BARS IN PLACE. ROLL-A-WAY IS NOT RESPONSIBLE FOR SUBSEQUENT DAMAGE.
3. REMOVING SPRING-LOADED STORM BARS: REMOVE PIN, LIFT UP ON STORM BAR, WHEN BOTTOM FEET CLEAR THE STORM BAR BASE PLATE, ROTATE STORM BAR OUT OF OPENING.
4. SHUTTERS WITH NO STORM BARS OVER 72" WIDE SHOULD USE SOME FORM OF HOOD SUPPORT, HEADER, TUBING OR EXTERNAL SUPPORT.
5. SEE 2 SPAN (SCHEDULE 18) AND 3 SPAN (SCHEDULE 19) MAXIMUM ALLOWABLE HEADER SPANS PER PAGE 23A OF 26.
6. SEE SHEET 24 OF 26 FOR ALLOWABLE HEADER SPANS USING EXTERIOR REINFORCEMENT BRACKETS WITH SMS (BUILD OUT SECTION E-E(3)) IN LIEU OF BOLTING OR USE SCHEDULES 16 AND 17 FOR THE SMS ATTACHMENT WITHOUT REINFORCEMENT.

Roll-a-way By aMI
1661 GLENLAKE AVENUE
ITASCA, IL 60143
COPYRIGHT © 2008
QUALITAS MANUFACTURING INC.

DRAWING TITLE:

NOTICE OF ACCEPTANCE END RETENTION - TDI PRODUCT APPROVAL

D.L. Fowler
Professional Engineer
Texas License No.
PE 102913

DRAWN:	DF
DATE:	08-10-04
APPROVED:	DLF
DATE:	10-28-08
DRAWING NO:	3-01-035
SIZE: B	REV: B
SCALE:	1 : 10
SHEET:	23 OF 26

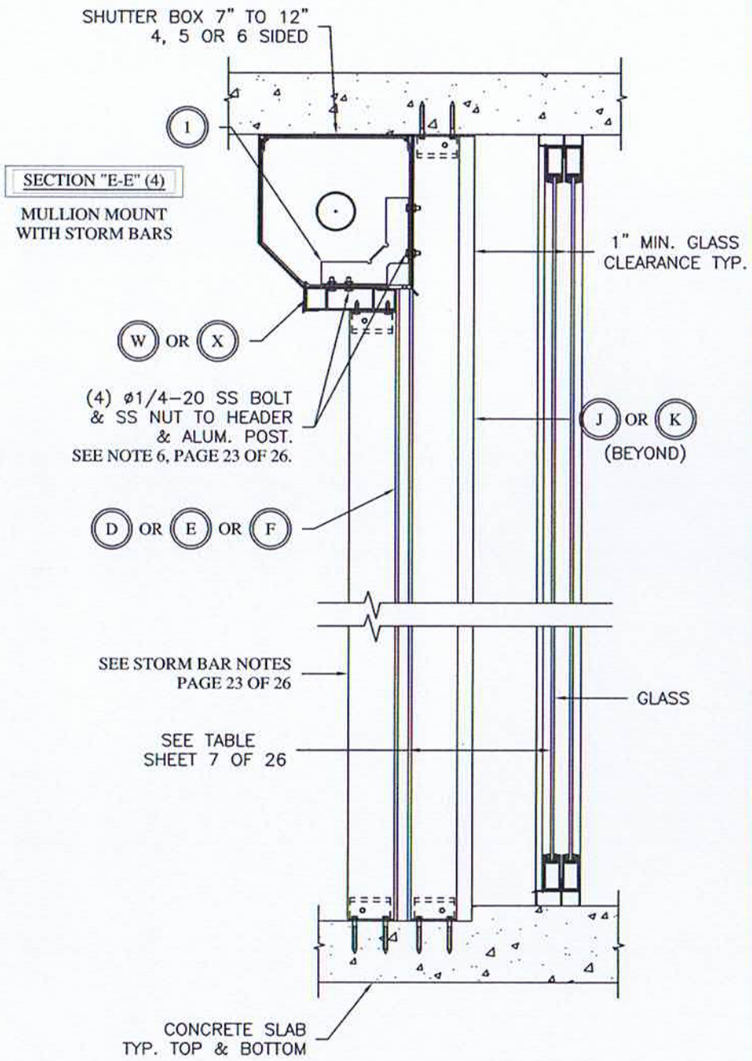

MAXIMUM ALLOWABLE 2 SPAN HEADER WIDTH (TRACK TO TRACK) E-E (4) BUILDOUT WITH BOLTED CONNECTION - **SCHEDULE 18** *

	STORM BAR HEIGHT UNDER HEADER															
PSF	42	48	54	60	66	72	78	84	90	96	102	108	114	120	126	132
25	240.0	240.0	234.8	224.0	214.6	206.3	199.0	192.4	186.4	181.0	176.1	171.5	167.3	163.4	159.8	156.4
30	240.0	228.0	216.3	206.2	197.5	189.8	183.0	176.9	171.4	166.4	161.8	157.6	153.8	150.2	146.8	143.7
35	225.8	212.6	201.6	192.2	184.0	176.8	170.5	164.8	159.6	155.0	150.7	146.7	143.1	139.7	136.6	133.7
40	212.6	200.1	189.7	180.8	173.1	166.3	160.3	154.9	150.1	145.6	141.6	137.9	134.5	131.3	128.4	125.6
45	201.5	189.6	179.7	171.3	163.9	157.5	151.8	146.7	142.1	137.9	134.0	130.5	127.3	124.3	121.5	118.9
50	192.0	180.7	171.2	163.1	156.1	150.0	144.5	139.6	135.2	131.2	127.6	124.2	121.1	148.5	145.2	142.1
55	183.8	172.9	163.8	156.1	149.4	143.5	138.2	133.6	129.3	125.5	122.0	118.8	145.4	142.1	138.9	136.0
60	176.6	166.1	157.4	149.9	143.4	137.8	132.7	128.2	124.2	120.5	147.0	143.2	139.7	136.4	133.4	130.6
65	170.2	160.1	151.6	144.4	138.2	132.7	127.9	123.5	119.6	145.6	141.6	138.0	134.6	131.5	128.6	125.9
70	164.5	154.7	146.5	139.5	133.5	128.2	123.5	119.3	144.9	140.7	136.9	133.3	130.1	127.1	124.2	121.6
75	159.3	149.8	141.9	135.1	129.2	124.1	119.6	144.9	140.4	136.3	132.6	129.2	126.0	123.0	120.3	117.8
80	154.6	145.4	137.6	131.1	125.4	120.4	145.5	140.6	136.3	132.3	128.7	125.3	122.3	119.4	116.7	114.3
85	150.3	141.3	133.8	127.4	121.9	146.7	141.5	136.8	132.5	128.6	125.1	121.9	118.9	116.1	113.5	111.1
90	146.4	137.6	130.3	124.1	148.7	142.9	137.8	133.2	129.0	125.3	121.8	118.7	115.7	113.0	110.5	108.1
95	142.7	134.2	127.0	120.9	145.0	139.4	134.4	129.9	125.8	122.2	118.8	115.7	112.8	110.2	107.7	105.4
100	139.4	131.0	124.0	147.9	141.6	136.1	131.2	126.8	122.9	119.3	116.0	113.0	110.2	107.6	105.2	102.9
125	125.6	118.0	140.1	133.5	127.8	122.8	118.4	114.4	110.8	107.5	104.6	101.8	99.3	97.0	94.8	92.7
150	144.5	136.0	128.8	122.8	117.5	112.9	108.8	105.1	101.8	98.8	96.0	93.5	91.2	89.0	87.0	85.1
175	134.6	126.7	120.0	114.3	109.4	105.1	101.2	97.8	94.7	91.9	89.3	87.0	84.8	82.8	80.9	79.1
200	126.6	119.1	112.8	107.4	102.8	98.7	95.1	91.9	88.9	86.3	83.9	81.7	79.6	77.7	76.0	74.3
225	119.9	112.8	106.8	101.7	97.3	93.4	90.0	86.9	84.2	81.6	79.4	77.2	75.3	73.5	71.8	70.3
250	114.3	107.5	101.8	96.9	92.7	89.0	85.7	82.8	80.2	77.8	75.6	73.6	71.7	70.0	68.4	66.9
275	109.4	102.8	97.3	92.7	88.6	85.1	82.0	79.1	76.6	74.3	72.2	70.3	68.5	66.9	63.8	60.9

* SHADED REGIONS PROVIDE FOR A MAXIMUM HEADER SPAN FOR THE 7-1/4" HEADER ONLY. A 5-7/8" HEADER IS ALLOWABLE AT A REDUCED SPAN.

MAXIMUM ALLOWABLE 3 SPAN HEADER WIDTH (TRACK TO TRACK) E-E (4) BUILDOUT WITH BOLTED CONNECTION - **SCHEDULE 19** *

	STORM BAR HEIGHT UNDER HEADER															
PSF	42	48	54	60	66	72	78	84	90	96	102	108	114	120	126	132
25	240.0	240.0	240.0	240.0	239.5	230.0	221.6	214.3	207.7	201.8	196.3	191.3	186.6	182.3	178.3	174.6
30	240.0	240.0	240.0	230.0	220.1	211.6	204.1	197.4	191.3	185.7	180.7	176.0	171.7	167.7	164.0	160.6
35	240.0	237.5	224.9	214.3	205.3	197.4	190.3	184.0	178.3	173.1	168.4	164.0	160.0	156.3	152.8	149.6
40	237.5	223.2	211.6	201.8	193.2	185.7	179.1	173.1	167.7	162.8	158.4	154.3	150.5	146.9	143.7	140.6
45	224.9	211.6	200.6	191.3	183.2	176.0	169.7	164.0	158.9	154.3	150.0	146.1	142.5	139.1	136.0	133.1
50	214.3	201.8	191.3	182.3	174.6	167.7	161.7	156.3	151.4	146.9	142.9	139.1	135.7	165.7	162.0	158.7
55	205.2	193.2	183.1	174.5	167.1	160.5	154.7	149.5	144.8	140.6	136.7	133.1	162.3	158.6	155.2	151.9
60	197.2	185.6	175.9	167.7	160.5	154.2	148.6	143.6	139.1	135.0	164.1	159.9	156.0	152.4	149.1	146.0
65	190.2	179.0	169.6	161.6	154.6	148.6	143.2	138.3	134.0	162.6	158.2	154.1	150.4	146.9	143.7	140.7
70	183.8	173.0	163.9	156.1	149.4	143.5	138.3	133.6	161.8	157.2	152.9	149.0	145.4	142.0	138.9	136.0
75	178.1	167.5	158.7	151.2	144.7	139.0	133.9	161.8	156.8	152.3	148.2	144.4	140.8	137.6	134.5	131.7
80	172.9	162.6	154.0	146.7	140.4	134.9	162.4	157.1	152.2	147.8	143.8	140.1	136.7	133.5	130.6	127.8
85	168.1	158.1	149.8	142.7	136.5	163.8	158.0	152.8	148.1	143.8	139.9	136.3	132.9	129.9	127.0	124.3
90	163.7	154.0	145.9	138.9	166.0	159.6	153.9	148.9	144.3	140.1	136.3	132.7	129.5	126.5	123.7	121.1
95	159.7	150.2	142.2	135.5	161.9	155.7	150.2	145.2	140.7	136.6	132.9	129.5	126.3	123.3	120.6	118.0
100	155.9	146.6	138.9	165.1	158.2	152.1	146.7	141.8	137.4	133.4	129.8	126.4	123.3	120.4	117.7	115.2
125	140.6	165.0	156.5	149.2	142.9	137.3	132.4	128.0	124.0	120.4	117.0	114.0	111.2	108.6	106.1	103.9
150	161.2	151.8	143.9	137.2	131.3	126.2	121.6	117.6	113.9	110.5	107.5	104.7	102.1	99.7	97.4	95.1
175	150.2	141.4	134.0	127.7	122.2	117.5	113.2	109.4	106.0	102.8	100.0	97.4	94.4	89.7	85.4	81.5
200	141.3	132.9	126.0	120.0	114.9	110.4	106.4	102.8	99.5	96.7	92.3	87.2	82.6	78.5	74.7	71.3
225	133.8	125.9	119.3	113.7	108.8	104.5	100.7	97.3	93.0	87.2	82.1	77.5	73.4	69.8	66.4	63.4
250	127.5	119.9	113.6	108.2	103.6	99.5	96.0	89.7	83.7	78.5	73.9	69.8	66.1	62.8	59.8	57.1
275	122.0	114.7	108.7	103.5	99.0	95.1	87.8	81.5	76.1	71.3	67.1	63.4	60.1	57.1	54.4	51.9

* SHADED REGIONS PROVIDE FOR A MAXIMUM HEADER SPAN FOR THE 7-1/4" HEADER ONLY. A 5-7/8" HEADER IS ALLOWABLE AT A REDUCED SPAN.

Roll-a-way By QMI
1661 GLENLAKE AVENUE
ITASCA, IL 60143
COPYRIGHT © 2008
QUALITAS MANUFACTURING INC.

DRAWING TITLE:
NOTICE OF ACCEPTANCE
END RETENTION - TDI
PRODUCT APPROVAL

D.L. Fowler
Professional Engineer
Texas License No.
PE 102913

DRAWN:	DF
DATE:	09-23-09
APPROVED:	DLF
DATE:	09-23-09
DRAWING NO:	3-01-035
SIZE: B	REV: A
SCALE:	1 : 10
SHEET:	23A OF 26

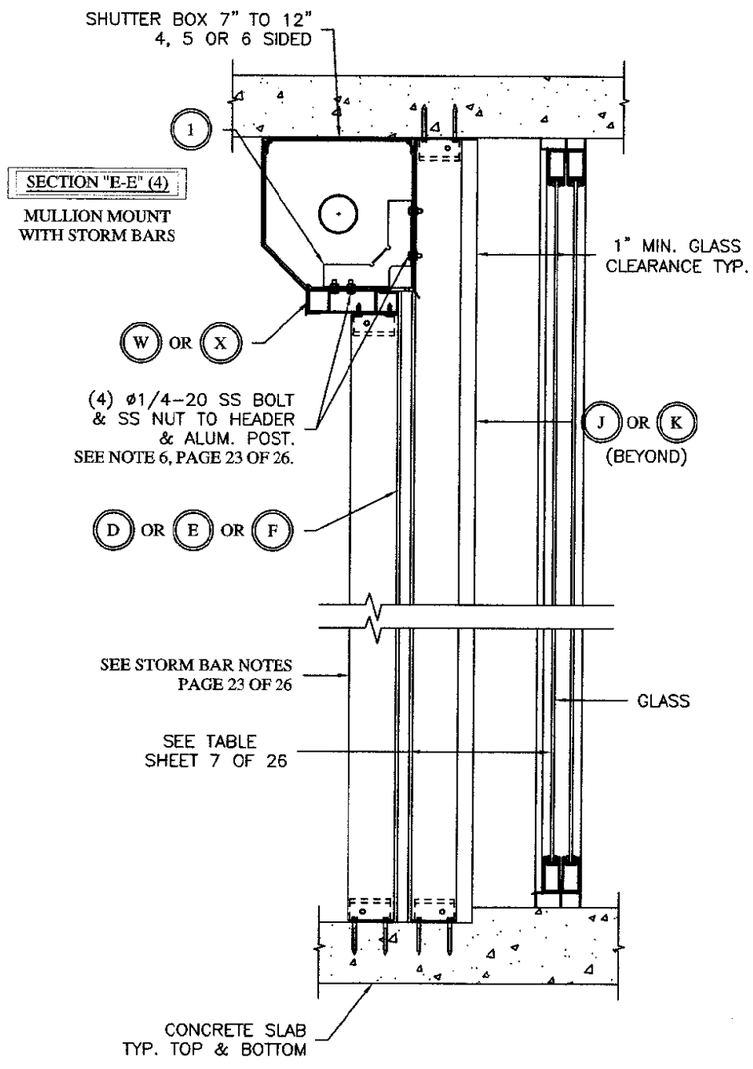

MAXIMUM ALLOWABLE 2 SPAN HEADER WIDTH (TRACK TO TRACK) E-E (4) BUILDOUT WITH BOLTED CONNECTION - **SCHEDULE 18A** *

3.5" HEADER

	STORM BAR HEIGHT UNDER HEADER															
PSF	42	48	54	60	66	72	78	84	90	96	102	108	114	120	126	132
25	182.2	171.2	162.0	154.2	147.5	141.5	136.3	131.6	127.4	123.6	120.1	116.9	113.9	111.2	108.6	106.2
30	167.3	157.2	148.7	141.5	135.3	129.8	125.0	120.7	116.8	113.3	110.1	107.1	104.4	101.9	99.6	97.4
35	155.6	146.1	138.3	131.6	125.8	120.7	116.2	112.2	108.6	105.3	102.3	99.5	97.0	94.7	92.5	90.4
40	146.1	137.2	129.8	123.5	118.0	113.3	109.0	105.3	101.9	98.8	96.0	93.4	91.0	88.8	86.8	84.8
45	138.2	129.8	122.8	116.8	111.6	107.1	103.1	99.5	96.3	93.4	90.7	88.3	86.0	83.9	82.0	80.2
50	131.5	123.5	116.8	111.1	106.1	101.8	98.0	94.6	91.6	88.8	86.2	83.9	81.8	79.8	77.9	76.2
55	125.7	118.0	111.6	106.1	101.4	97.3	93.7	90.4	87.5	84.8	82.4	80.2	78.1	76.2	74.4	72.8
60	120.6	113.2	107.1	101.8	97.3	93.3	89.8	86.7	83.9	81.3	79.0	76.9	74.9	73.1	71.4	69.8
65	116.1	109.0	103.0	98.0	93.6	89.8	86.5	83.4	80.7	78.3	76.0	74.0	72.1	70.3	68.7	67.2
70	112.1	105.2	99.5	94.6	90.4	86.7	83.4	80.5	77.9	75.5	73.4	71.4	69.5	67.8	66.3	64.8
75	108.5	101.8	96.2	91.5	87.4	83.9	80.7	77.9	75.4	73.1	71.0	69.0	67.3	65.6	64.1	62.7
80	105.2	98.7	93.3	88.7	84.8	81.3	78.2	75.5	73.1	70.8	68.8	66.9	65.2	63.6	62.1	60.8
85	102.2	95.9	90.6	86.2	82.3	79.0	76.0	73.3	71.0	68.8	66.8	65.0	63.3	61.8	60.3	59.0
90	99.4	93.3	88.2	83.9	80.1	76.8	73.9	71.4	69.0	66.9	65.0	63.2	61.6	60.1	58.7	57.4
95	96.9	90.9	85.9	81.7	78.1	74.9	72.0	69.5	67.2	65.2	63.3	61.6	60.0	58.5	57.2	55.9
100	94.5	88.7	83.8	79.7	76.1	73.0	70.3	67.8	65.6	63.6	61.8	60.1	58.5	57.1	55.8	54.5
125	85.0	79.7	75.3	71.6	68.4	65.6	63.1	60.9	58.9	57.1	55.4	53.9	52.5	51.3	50.1	48.9
150	77.8	73.0	69.0	65.6	62.6	60.1	57.8	55.8	53.9	52.3	50.8	49.4	48.1	46.9	45.7	44.7
175	72.3	67.8	64.0	60.9	58.1	55.7	53.6	51.7	50.0	48.5	47.1	45.7	44.5	43.4	42.3	41.4
200	67.8	63.6	60.0	57.1	54.5	52.3	50.3	48.5	46.9	45.4	44.0	42.8	41.6	40.6	39.6	38.7
225	64.0	60.0	56.7	53.9	51.5	49.4	47.5	45.7	44.2	42.8	41.5	40.3	39.3	38.3	37.3	36.5
250	60.9	57.1	53.9	51.2	48.9	46.9	45.0	43.4	41.9	40.6	39.4	38.3	37.2	36.3	35.4	34.6
275	58.1	54.5	51.5	48.9	46.7	44.7	42.9	41.4	40.0	38.7	37.5	36.5	35.5	34.6	33.8	33.0

MAXIMUM ALLOWABLE 2 SPAN HEADER WIDTH (TRACK TO TRACK) E-E (4) BUILDOUT WITH BOLTED CONNECTION - **SCHEDULE 19A** *

3.5" HEADER

	STORM BAR HEIGHT UNDER HEADER															
PSF	42	48	54	60	66	72	78	84	90	96	102	108	114	120	126	132
25	184.6	176.6	169.8	163.9	158.8	154.3	150.2	146.5	142.8	138.5	134.6	131.0	127.7	124.7	121.8	119.2
30	173.7	166.2	159.8	154.3	149.4	145.2	140.2	135.4	131.0	127.1	123.5	120.2	117.2	114.4	111.8	109.3
35	165.0	157.8	151.8	146.5	141.0	135.4	130.4	125.9	121.8	118.2	114.8	111.8	108.9	106.3	103.9	101.6
40	157.8	151.0	145.2	138.5	132.4	127.1	122.4	118.2	114.4	110.9	107.8	104.9	102.2	99.8	97.5	95.3
45	151.8	145.2	137.7	131.0	125.3	120.2	115.8	111.8	108.2	104.9	101.9	99.2	96.6	94.3	92.1	90.1
50	146.5	138.5	131.0	124.7	119.2	114.4	110.1	106.3	102.9	99.8	96.9	94.3	91.9	89.7	87.6	85.7
55	141.0	132.4	125.3	119.2	113.9	109.3	105.2	101.6	98.3	95.3	92.6	90.1	87.8	85.7	83.7	81.9
60	135.3	127.1	120.2	114.3	109.3	104.9	100.9	97.4	94.3	91.4	88.8	86.4	84.2	82.2	80.3	78.5
65	130.3	122.4	115.7	110.1	105.2	100.9	97.2	93.8	90.8	88.0	85.5	83.2	81.0	79.1	77.3	75.5
70	125.8	118.1	111.7	106.3	101.5	97.4	93.8	90.5	87.6	84.9	82.5	80.3	78.2	76.3	74.5	72.9
75	121.8	114.3	108.1	102.8	98.3	94.3	90.7	87.6	84.7	82.2	79.8	77.6	75.7	73.8	72.1	70.5
80	118.1	110.8	104.8	99.7	95.3	91.4	88.0	84.9	82.1	79.6	77.4	75.3	73.3	71.6	69.9	68.4
85	114.7	107.7	101.8	96.9	92.5	88.8	85.4	82.5	79.8	77.4	75.1	73.1	71.2	69.5	67.9	66.4
90	111.7	104.8	99.1	94.2	90.1	86.4	83.1	80.2	77.6	75.3	73.1	71.1	69.3	67.6	66.0	64.6
95	108.8	102.1	96.6	91.8	87.7	84.2	81.0	78.2	75.6	73.3	71.2	69.3	67.5	65.9	64.3	62.9
100	106.2	99.7	94.2	89.6	85.6	82.1	79.0	76.3	73.8	71.5	69.5	67.6	65.9	64.3	62.8	61.4
125	95.5	89.6	84.7	80.5	76.9	73.8	71.0	68.5	66.3	64.2	62.4	60.7	59.1	57.7	56.3	55.1
150	87.5	82.1	77.6	73.8	70.5	67.6	65.0	62.7	60.7	58.8	57.1	55.6	54.1	52.8	51.6	50.4
175	81.2	76.2	72.0	68.5	65.4	62.7	60.3	58.2	56.3	54.6	53.0	51.6	50.2	49.0	47.9	46.8
200	76.2	71.5	67.5	64.2	61.3	58.8	56.6	54.6	52.8	51.2	49.7	48.3	47.1	45.9	44.8	43.8
225	72.0	67.5	63.8	60.6	57.9	55.5	53.4	51.6	49.9	48.3	46.9	45.6	44.4	43.3	42.2	41.2
250	68.4	64.2	60.6	57.6	55.0	52.8	50.8	49.0	47.4	45.9	44.5	43.3	42.1	41.0	40.1	39.1
275	65.4	61.3	57.9	55.0	52.6	50.4	48.5	46.8	45.2	43.8	42.4	41.2	40.1	39.1	38.2	37.3

Roll-a-way By OMI
1661 GLENLAKE AVENUE
ITASCA, IL 60143
COPYRIGHT © 2008
QUALITAS MANUFACTURING INC.

DRAWING TITLE:
NOTICE OF ACCEPTANCE
END RETENTION - TDI
PRODUCT APPROVAL

D.L. Fowler
Professional Engineer
Texas License No.
PE 102913

DRAWN:	DF
DATE:	09-23-09
APPROVED:	DLF
DATE:	09-23-09
DRAWING NO:	3-01-035
SIZE: B	REV: -
SCALE:	1 : 10
SHEET:	23B OF 26

WALL MOUNT
SECTION A-A(1)

REINFORCED HEADER CONNECTION

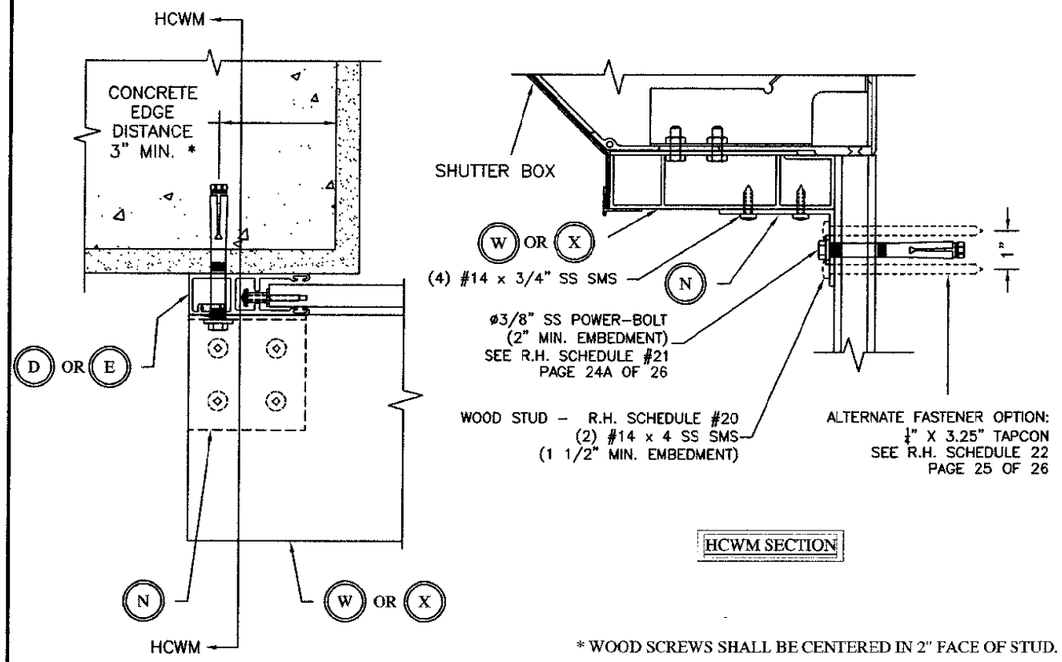

HCWM SECTION

* WOOD SCREWS SHALL BE CENTERED IN 2" FACE OF STUD.

JAMB MOUNT

REINFORCED HEADER CONNECTION
SEE R.H. SCHEDULE#22
PAGE 25 OF 26

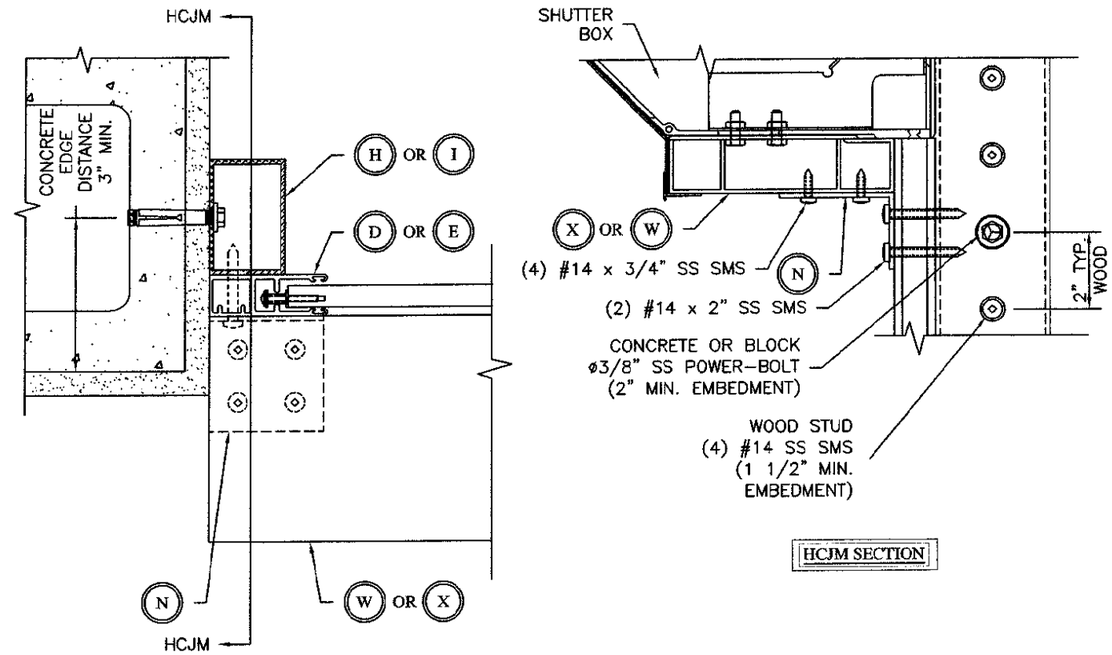

HCJM SECTION

MAXIMUM ALLOWABLE 2 SPAN 5.875" HEADER WIDTH (TRACK TO TRACK) - **REINFORCED HEADER SCHEDULE 20**

	STORM BAR HEIGHT UNDER HEADER															
PSF	42	48	54	60	66	72	78	84	90	96	102	108	114	120	126	132
25	240.0	240.0	234.8	224.0	214.6	206.3	199.0	192.4	186.4	181.0	176.1	171.5	167.3	163.4	159.8	156.4
30	240.0	228.0	216.3	206.2	197.5	189.8	183.0	176.9	171.4	166.4	161.8	157.6	153.8	150.2	146.8	143.7
35	225.8	212.6	201.6	192.2	184.0	176.8	170.5	164.8	159.6	155.0	150.7	146.7	143.1	139.7	136.6	133.7
40	212.6	200.1	189.7	180.8	173.1	166.3	160.3	154.9	150.1	145.6	141.6	137.9	134.5	131.3	128.4	125.6
45	201.5	189.6	179.7	171.3	163.9	157.5	151.8	146.7	142.1	137.9	134.0	130.5	127.3	124.3	121.5	118.9
50	192.0	180.7	171.2	163.1	156.1	150.0	144.5	139.6	135.2	131.2	127.6	124.2	121.1	118.3	115.6	113.1
55	183.8	172.9	163.8	156.1	149.4	143.5	138.2	133.6	129.3	125.5	122.0	118.8	115.8	113.1	110.5	108.1
60	176.6	166.1	157.4	149.9	143.4	137.8	132.7	128.2	124.2	120.5	117.1	114.0	111.2	108.5	106.1	103.8
65	170.2	160.1	151.6	144.4	138.2	132.7	127.9	123.5	119.6	116.0	112.8	109.8	107.1	104.5	102.1	99.9
70	164.5	154.7	146.5	139.5	133.5	128.2	123.5	119.3	115.5	112.1	108.9	106.0	103.4	100.9	98.6	96.5
75	159.3	149.8	141.9	135.1	129.2	124.1	119.6	115.5	111.8	108.5	105.4	102.6	100.1	97.7	95.5	93.4
80	154.6	145.4	137.6	131.1	125.4	120.4	116.0	112.0	108.5	105.2	102.3	99.6	97.0	94.7	92.6	90.6
85	150.3	141.3	133.8	127.4	121.9	117.0	112.7	108.9	105.4	102.3	99.4	96.7	94.3	92.1	90.0	88.0
90	146.4	137.6	130.3	124.1	118.7	113.9	109.7	106.0	102.6	99.5	96.7	94.2	91.8	89.6	87.5	85.6
95	142.7	134.2	127.0	120.9	115.7	111.1	107.0	103.3	100.0	97.0	94.3	91.8	89.5	87.3	85.3	83.5
100	139.4	131.0	124.0	118.1	112.9	108.4	104.4	100.8	97.6	94.7	92.0	89.6	87.3	85.2	83.3	81.3
125	125.6	118.0	111.7	106.3	101.6	97.6	94.0	90.7	87.8	85.2	82.8	79.5	75.3	71.6	68.2	65.1
150	115.3	108.3	102.5	97.5	93.2	89.5	86.2	83.2	79.5	74.6	70.2	66.3	62.8	59.6	56.8	54.2
175	107.2	100.7	95.3	90.7	86.7	83.2	78.7	73.0	68.2	63.9	60.1	56.8	53.8	51.1	48.7	46.5
200	100.7	94.6	89.5	85.1	81.3	74.6	68.8	63.9	59.6	55.9	52.6	49.7	47.1	44.7	42.6	40.7
225	95.3	89.4	84.6	79.5	72.3	66.3	61.2	56.8	53.0	49.7	46.8	44.2	41.9	39.8	37.9	36.2
250	90.6	85.1	79.5	71.6	65.1	59.6	55.1	51.1	47.7	44.7	42.1	39.8	37.7	35.8	34.1	32.5
275	86.6	81.3	72.3	65.1	59.2	54.2	50.1	45.5	43.4	40.7	38.3	36.2	34.2	32.5	31.0	29.6

* WALL MOUNT A-A(1) ON WOOD WITH REINFORCEMENT ANGLE

MAXIMUM ALLOWABLE 2 SPAN 7.25" HEADER WIDTH (TRACK TO TRACK) - **REINFORCED HEADER SCHEDULE 20**

	STORM BAR HEIGHT UNDER HEADER															
PSF	42	48	54	60	66	72	78	84	90	96	102	108	114	120	126	132
25	240.0	240.0	240.0	240.0	240.0	240.0	240.0	237.8	230.7	224.3	218.4	212.9	207.9	203.2	198.9	194.8
30	240.0	240.0	240.0	240.0	240.0	234.9	226.8	219.5	212.9	206.9	201.4	196.4	191.7	187.4	183.3	179.5
35	240.0	240.0	240.0	237.6	227.9	219.4	211.7	204.9	198.7	193.1	187.9	183.2	178.8	174.7	170.9	167.4
40	240.0	240.0	234.6	224.0	214.8	206.7	199.5	193.0	187.2	181.8	176.9	172.5	168.3	164.4	160.9	157.5
45	240.0	234.5	222.7	212.6	203.8	196.1	189.2	183.1	177.5	172.4	167.7	163.5	159.5	155.8	152.4	149.2
50	237.2	223.7	212.5	202.8	194.4	187.0	180.4	174.5	169.1	164.3	159.8	155.8	152.0	148.5	145.2	142.1
55	227.3	214.4	203.5	194.2	186.1	179.0	172.7	167.0	161.9	157.2	153.0	149.1	145.4	142.1	138.9	136.0
60	218.6	206.2	195.7	186.7	178.9	172.1	166.0	160.5	155.6	151.1	147.0	143.2	139.7	136.4	133.4	130.6
65	211.0	198.9	188.7	180.1	172.5	165.9	160.0	154.7	150.0	145.6	141.6	138.0	134.6	131.5	128.6	125.1
70	204.1	192.4	182.5	174.1	166.8	160.4	154.7	149.6	144.9	140.7	136.9	133.3	130.1	127.1	121.7	116.2
75	197.9	186.5	176.9	168.7	161.6	155.4	149.9	144.9	140.4	136.3	132.6	129.2	125.6	119.3	113.6	108.5
80	192.2	181.1	171.8	163.8	156.9	150.9	145.5	140.6	136.3	132.3	128.7	124.3	117.7	111.8	106.5	101.7
85	187.0	176.2	167.1	159.4	152.6	146.7	141.5	136.8	132.5	128.6	123.8	117.0	110.8	105.3	100.2	95.7
90	182.3	171.7	162.8	155.2	148.7	142.9	137.8	133.2	129.0	124.3	117.0	110.5	104.6	99.4	94.7	90.4
95	177.8	167.5	158.8	151.4	145.0	139.4	134.4	129.9	125.6	117.7	110.8	104.6	99.1	94.2	89.7	85.6
100	173.7	163.6	155.1	147.9	141.6	136.1	131.2	126.8	119.3	111.8	105.3	99.4	94.2	89.5	85.2	81.3
125	157.1	147.8	140.1	133.5	127.8	119.3	110.1	102.3	95.4	89.5	84.2	79.5	75.3	71.6	68.2	65.1
150	144.5	136.0	128.8	119.3	108.5	99.4	91.8	85.2	79.5	74.6	70.2	66.3	62.8	59.6	56.8	54.2
175	134.6	126.7	113.6	102.3	93.0	85.2	78.7	73.0	68.2	63.9	60.1	56.8	53.8	51.1	48.7	46.5
200	126.7	111.8	99.4	89.5	81.3	74.6	68.8	63.9	59.6	55.9	52.6	49.7	47.1	44.7	42.6	40.7
225	113.6	99.4	88.4	79.5	72.3	66.3	61.2	56.8	53.0	49.7	46.8	44.2	41.9	39.8	37.9	36.2
250	102.3	89.5	79.5	71.6	65.1	59.6	55.1	51.1	47.7	44.7	42.1	39.8	37.7	35.8	34.1	32.5
275	93.0	81.3	72.3	65.1	59.2	54.2	50.1	46.5	43.4	40.7	38.3	36.2	34.2	32.5	31.0	29.6

* WALL MOUNT A-A(1) ON WOOD WITH REINFORCEMENT ANGLE

Roll-a-way By AMI
1661 GLENLAKE AVENUE
ITASCA, IL 60143

COPYRIGHT © 2008
QUALITAS MANUFACTURING INC.

DRAWING TITLE:

NOTICE OF ACCEPTANCE
END RETENTION -TDI
PRODUCT APPROVAL

D.L. Fowler
Professional Engineer
Texas License No.
PE 102913

01-22-10

DRAWN:	DF
DATE:	11-05-09
APPROVED:	DLF
DATE:	11-05-09
DRAWING NO:	3-01-035
SIZE: B	REV: B
SCALE:	1 : 4
SHEET:	24 OF 26

WALL MOUNT
SECTION A-A(1)

REINFORCED HEADER CONNECTION

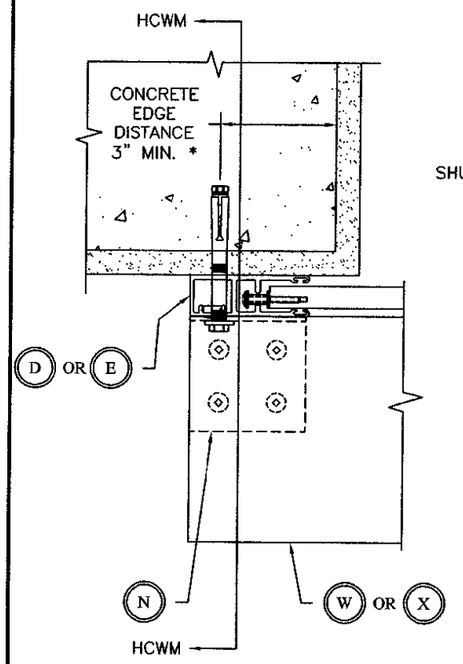

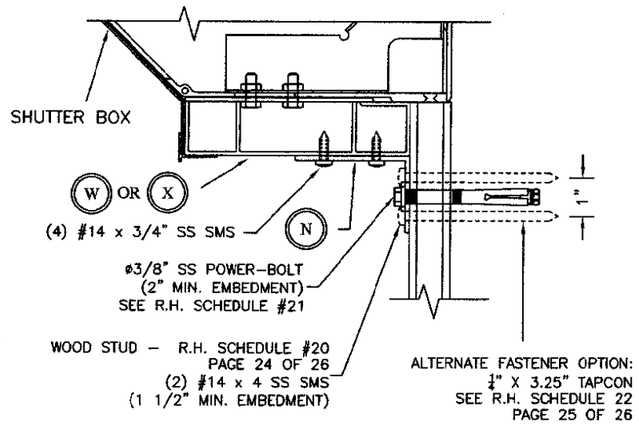

HCWM SECTION

* WOOD SCREWS SHALL BE CENTERED IN 2" FACE OF STUD.

NOTE: 2 SPAN APPLICATION CHARTS BELOW (SCHEDULE # 21)
FOR 3 SPAN CONDITIONS USE SCHEDULE 19, PAGE 23A

JAMB MOUNT

REINFORCED HEADER CONNECTION
SEE R.H. SCHEDULE#22

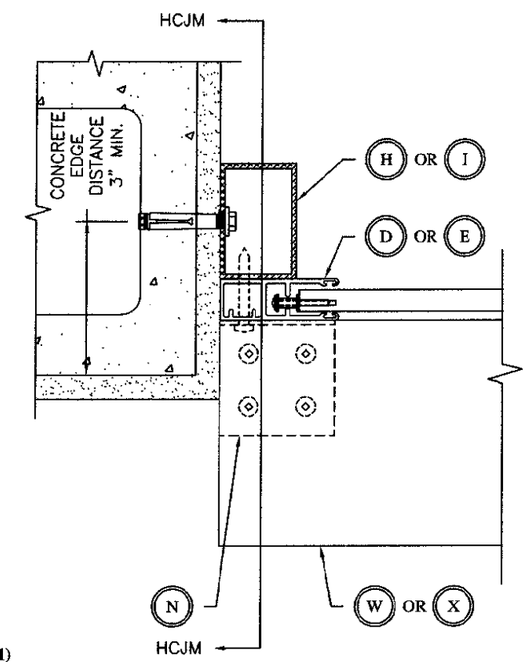

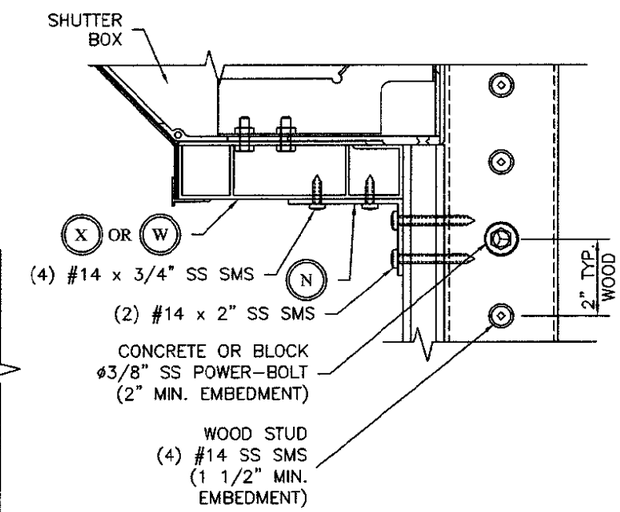

HCJM SECTION

MAXIMUM ALLOWABLE 2 SPAN 5.875" HEADER WIDTH (TRACK TO TRACK) **REINFORCED HEADER SCHEDULE #21***

PSF	STORM BAR HEIGHT UNDER HEADER															
	42	48	54	60	66	72	78	84	90	96	102	108	114	120	126	132
25	240.0	240.0	234.8	224.0	214.6	206.3	199.0	192.4	186.4	181.0	176.1	171.5	167.3	163.4	159.8	156.4
30	240.0	228.0	216.3	206.2	197.5	189.8	183.0	176.9	171.4	166.4	161.8	157.6	153.8	150.2	146.8	143.7
35	225.8	212.6	201.6	192.2	184.0	176.8	170.5	164.8	159.6	155.0	150.7	146.7	143.1	139.7	136.6	133.7
40	212.6	200.1	189.7	180.8	173.1	166.3	160.3	154.9	150.1	145.6	141.6	137.9	134.5	131.3	128.4	125.6
45	201.5	189.6	179.7	171.3	163.9	157.5	151.8	146.7	142.1	137.9	134.0	130.5	127.3	124.3	121.5	118.9
50	192.0	180.7	171.2	163.1	156.1	150.0	144.5	139.6	135.2	131.2	127.6	124.2	121.1	118.3	115.6	113.1
55	183.8	172.9	163.8	156.1	149.4	143.5	138.2	133.6	129.3	125.5	122.0	118.8	115.8	113.1	110.5	108.1
60	176.6	166.1	157.4	149.9	143.4	137.8	132.7	128.2	124.2	120.5	117.1	114.0	111.2	108.5	106.1	103.8
65	170.2	160.1	151.6	144.4	138.2	132.7	127.9	123.5	119.6	116.0	112.8	109.8	107.1	104.5	102.1	99.9
70	164.5	154.7	146.5	139.5	133.5	128.2	123.5	119.3	115.5	112.1	108.9	106.0	103.4	100.9	98.6	96.5
75	159.3	149.8	141.9	135.1	129.2	124.1	119.6	115.5	111.8	108.5	105.4	102.6	100.1	97.7	95.5	93.4
80	154.6	145.4	137.6	131.1	125.4	120.4	116.0	112.0	108.5	105.2	102.3	99.6	97.0	94.7	92.6	90.6
85	150.3	141.3	133.8	127.4	121.9	117.0	112.7	108.9	105.4	102.3	99.4	96.7	94.3	92.1	90.0	88.0
90	146.4	137.6	130.3	124.1	118.7	113.9	109.7	106.0	102.6	99.5	96.7	94.2	91.8	89.6	87.5	85.6
95	142.7	134.2	127.0	120.9	115.7	111.1	107.0	103.3	100.0	97.0	94.3	91.8	89.5	87.3	85.3	83.5
100	139.4	131.0	124.0	118.1	112.9	108.4	104.4	100.8	97.6	94.7	92.0	89.6	87.3	85.2	83.3	81.4
125	125.6	118.0	111.7	105.3	101.6	97.6	94.0	90.7	87.8	85.2	82.8	80.6	78.5	76.6	74.9	73.2
150	115.3	108.3	102.5	97.5	93.2	89.5	86.2	83.2	80.5	78.1	75.9	73.8	72.0	70.2	68.6	67.1
175	107.2	100.7	95.3	90.7	86.7	83.2	80.1	77.3	74.8	72.6	70.5	68.6	66.9	65.2	63.7	62.3
200	100.7	94.6	89.5	85.1	81.4	78.1	75.2	72.6	70.2	68.1	66.1	64.4	62.7	61.2	59.8	58.5
225	95.3	89.4	84.6	80.5	76.9	73.8	71.1	68.6	66.4	64.4	62.5	60.8	59.3	57.8	56.5	55.3
250	90.6	85.1	80.5	76.5	73.2	70.2	67.6	65.2	63.1	61.2	59.4	57.8	56.4	55.0	53.7	52.5
275	86.6	81.3	76.9	73.1	69.9	67.1	64.5	62.3	60.3	58.4	56.8	55.2	53.8	52.5	51.3	50.2

*Wall Mount A-A (1) on Concrete with Reinforcment Angle

MAXIMUM ALLOWABLE 2 SPAN 7.25" HEADER WIDTH (TRACK TO TRACK) - **REINFORCED HEADER SCHEDULE 21***

PSF	STORM BAR HEIGHT UNDER HEADER															
	42	48	54	60	66	72	78	84	90	96	102	108	114	120	126	132
25	240.0	240.0	240.0	240.0	240.0	240.0	240.0	237.8	230.7	224.3	218.4	212.9	207.9	203.2	198.9	194.8
30	240.0	240.0	240.0	240.0	240.0	234.9	226.8	219.5	212.9	206.9	201.4	196.4	191.7	187.4	183.3	179.5
35	240.0	240.0	240.0	237.6	227.9	219.4	211.7	204.9	198.7	193.1	187.9	183.2	178.8	174.7	170.9	167.4
40	240.0	240.0	234.6	224.0	214.8	206.7	199.5	193.0	187.2	181.8	176.9	172.5	168.3	164.4	160.9	157.5
45	240.0	234.5	222.7	212.6	203.8	196.1	189.2	183.1	177.5	172.4	167.7	163.5	159.5	155.8	152.4	149.2
50	237.2	223.7	212.5	202.8	194.4	187.0	180.4	174.5	169.1	164.3	159.8	155.8	152.0	148.5	145.2	142.1
55	227.3	214.4	203.5	194.2	186.1	179.0	172.7	167.0	161.9	157.2	153.0	149.1	145.4	142.1	138.9	136.0
60	218.6	206.2	195.7	186.7	178.9	172.1	166.0	160.5	155.6	151.1	147.0	143.2	139.7	136.4	133.4	130.6
65	211.0	198.9	188.7	180.1	172.5	165.9	160.0	154.7	150.0	145.6	141.6	138.0	134.6	131.5	128.6	125.9
70	204.1	192.4	182.5	174.1	166.8	160.4	154.7	149.6	144.9	140.7	136.9	133.3	130.1	127.1	124.2	121.6
75	197.9	186.5	176.9	168.7	161.6	155.4	149.9	144.9	140.4	136.3	132.6	129.2	126.0	123.0	120.3	117.8
80	192.2	181.1	171.8	163.8	156.9	150.9	145.5	140.6	136.3	132.3	128.7	125.3	122.3	119.4	116.7	114.3
85	187.0	176.2	167.1	159.4	152.6	146.7	141.5	136.8	132.5	128.6	125.1	121.9	118.9	116.1	113.5	111.1
90	182.3	171.7	162.8	155.2	148.7	142.9	137.8	133.2	129.0	125.3	121.8	118.7	115.7	113.0	110.5	108.1
95	177.8	167.5	158.8	151.4	145.0	139.4	134.4	129.9	125.8	122.2	118.8	115.7	112.8	110.2	107.7	105.4
100	173.7	163.6	155.1	147.9	141.6	136.1	131.2	126.8	122.9	119.3	116.0	113.0	110.2	107.6	105.2	102.9
125	157.1	147.8	140.1	133.5	127.8	122.8	118.4	114.4	110.8	107.5	104.6	101.8	99.3	97.0	94.8	92.7
150	144.5	136.0	128.8	122.8	117.5	112.9	108.8	105.1	101.8	98.8	96.0	93.5	91.2	89.0	87.0	85.1
175	134.6	126.7	120.0	114.3	109.4	105.1	101.2	97.8	94.7	91.9	89.3	87.0	84.8	82.8	80.9	79.1
200	126.6	119.1	112.8	107.4	102.8	98.7	95.1	91.9	88.9	86.3	83.9	81.7	79.6	77.7	76.0	74.3
225	119.9	112.8	106.8	101.7	97.3	93.4	90.0	86.9	84.2	81.6	79.4	77.2	75.3	73.5	71.8	70.3
250	114.3	107.5	101.8	96.9	92.7	89.0	85.7	82.8	80.2	77.8	75.6	73.6	71.7	70.0	68.4	66.9
275	109.4	102.8	97.3	92.7	88.6	85.1	82.0	79.1	76.6	74.3	72.2	70.3	68.5	66.9	63.8	60.9

*Wall Mount A-A (1) on Concrete with Reinforcment Angle

Roll-a-way By OMI
1661 GLENLAKE AVENUE
ITASCA, IL 60143

COPYRIGHT © 2008
QUALITAS MANUFACTURING INC.

DRAWING TITLE:

NOTICE OF ACCEPTANCE
END RETENTION - TDI
PRODUCT APPROVAL

D.L. Fowler
Professional Engineer
Texas License No.
PE 102913

11-24-10

DRAWN:	DF
DATE:	11-05-09
APPROVED:	DLF
DATE:	11-05-09
DRAWING NO:	3-01-035
SIZE: B	REV: -
SCALE:	1 : 4
SHEET:	24A OF 26

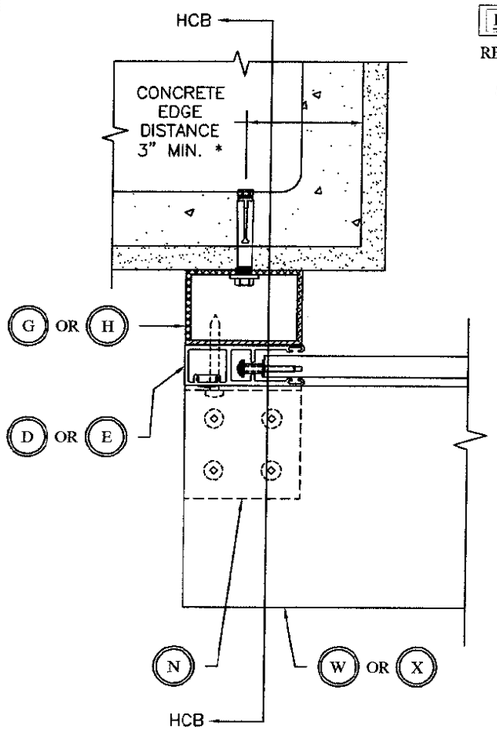

BUILDOUT MOUNT

REINFORCED HEADER CONNECTION SEE SCHEDULE 22

* WOOD SCREWS SHALL BE CENTERED IN 2" FACE OF STUD.

NOTE: USE 3 SPAN SCHEDULE 17, PAGE 20A, AS NEEDED.

HCB SECTION

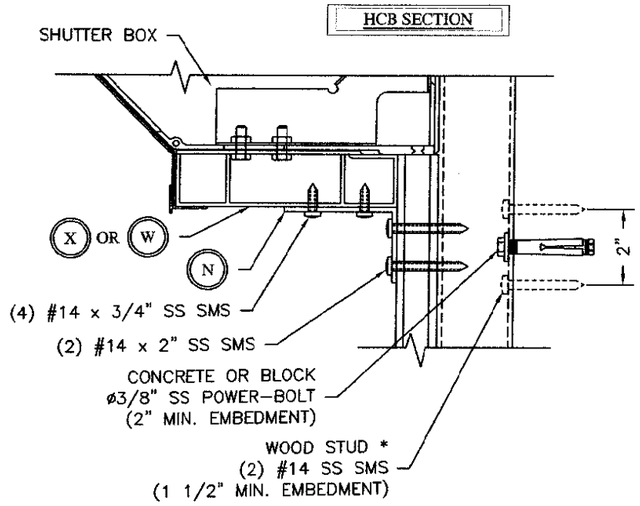

MAXIMUM ALLOWABLE 2 SPAN 7.25" HEADER WIDTH (TRACK TO TRACK) - **REINFORCED HEADER SCHEDULE 22 ***																
	STORM BAR HEIGHT UNDER HEADER															
PSF	42	48	54	60	66	72	78	84	90	96	102	108	114	120	126	132
25	240.0	240.0	240.0	240.0	240.0	240.0	240.0	237.8	230.7	224.3	218.4	212.9	207.9	203.2	198.9	194.8
30	240.0	240.0	240.0	240.0	240.0	234.9	226.8	219.5	212.9	206.9	201.4	196.4	191.7	187.4	183.3	179.5
35	240.0	240.0	240.0	237.6	227.9	219.4	211.7	204.9	198.7	193.1	187.9	183.2	178.8	174.7	170.9	167.4
40	240.0	240.0	234.5	224.0	214.8	206.7	199.5	193.0	187.2	181.8	176.9	172.5	168.3	164.4	160.9	157.5
45	240.0	234.5	222.7	212.6	203.8	196.1	189.2	183.1	177.5	172.4	167.7	163.5	159.5	155.8	152.4	149.2
50	237.2	223.7	212.5	202.8	194.4	187.0	180.4	174.5	169.1	164.3	159.8	155.8	152.0	148.5	145.2	142.1
55	227.3	214.4	203.5	194.2	186.1	179.0	172.7	167.0	161.9	157.2	153.0	149.1	145.4	142.1	138.9	136.0
60	218.6	206.2	195.7	186.7	178.9	172.1	166.0	160.5	155.6	151.1	147.0	143.2	139.7	136.4	133.4	130.6
65	211.0	198.9	188.7	180.1	172.5	165.9	160.0	154.7	150.0	145.6	141.6	138.0	134.6	131.5	128.6	125.9
70	204.1	192.4	182.5	174.1	166.8	160.4	154.7	149.6	144.9	140.7	136.9	133.3	130.1	127.1	124.2	121.6
75	197.9	186.5	176.9	168.7	161.6	155.4	149.9	144.9	140.4	136.3	132.6	129.2	126.0	123.0	120.3	117.8
80	192.2	181.1	171.8	163.8	156.9	150.9	145.5	140.6	136.3	132.3	128.7	125.3	122.3	119.4	116.7	114.3
85	187.0	176.2	167.1	159.4	152.6	146.7	141.5	136.8	132.5	128.6	125.1	121.9	118.9	116.1	113.5	111.1
90	182.3	171.7	162.8	155.2	148.7	142.9	137.8	133.2	129.0	125.3	121.8	118.7	115.7	113.0	110.5	108.1
95	177.8	167.5	158.8	151.4	145.0	139.4	134.4	129.9	125.8	122.2	118.8	115.7	112.8	110.2	107.7	105.4
100	173.7	163.6	155.1	147.9	141.6	136.1	131.2	126.8	122.9	119.3	116.0	113.0	110.2	107.6	105.2	102.9
125	157.1	147.8	140.1	133.5	127.8	122.8	118.4	114.4	110.8	107.5	104.6	101.8	99.3	97.0	94.8	92.7
150	144.5	136.0	128.8	122.8	117.5	112.9	108.8	105.1	101.8	98.8	96.0	93.5	91.2	89.0	86.1	82.2
175	134.6	126.7	120.0	114.3	109.4	105.1	101.2	97.8	94.7	91.9	89.3	86.1	81.5	77.5	73.8	70.4
200	126.6	119.1	112.8	107.4	102.8	98.7	95.1	91.9	88.9	84.7	79.7	75.3	71.3	67.8	64.5	61.6
225	119.9	112.8	106.8	101.7	97.3	93.4	90.0	86.1	80.3	75.3	70.9	66.9	63.4	60.2	57.4	54.8
250	114.3	107.5	101.8	96.9	92.7	89.0	83.4	77.5	72.3	67.8	63.8	60.2	57.1	54.2	51.6	49.3
275	109.4	102.8	97.3	92.7	88.6	82.2	75.8	70.4	65.7	61.6	58.0	54.8	51.9	49.3	46.9	44.8

* BUILDOUT AND MULLION MOUNT WITH REINFORCEMENT ANGLE

SPLIT BUILDOUT MOUNT

REINFORCED HEADER CONNECTION SEE SCHEDULE 22

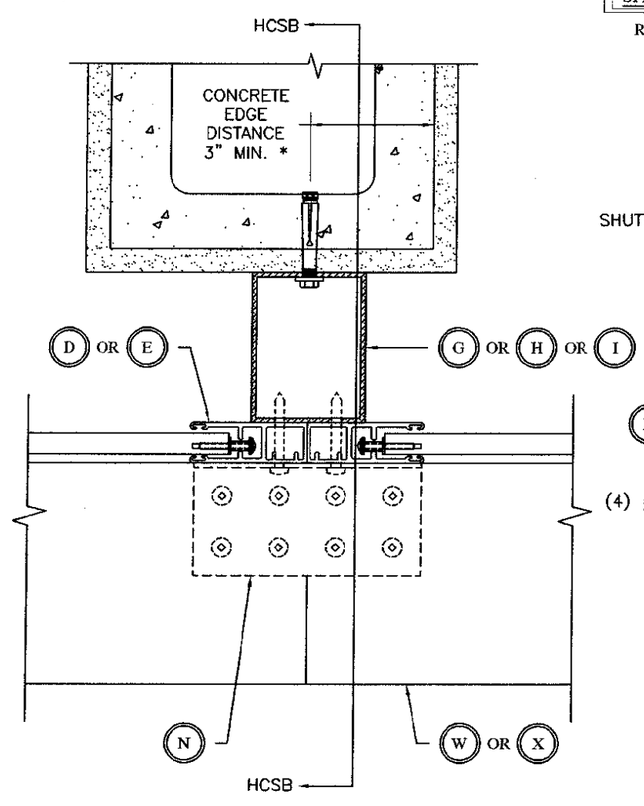

HCSB SECTION

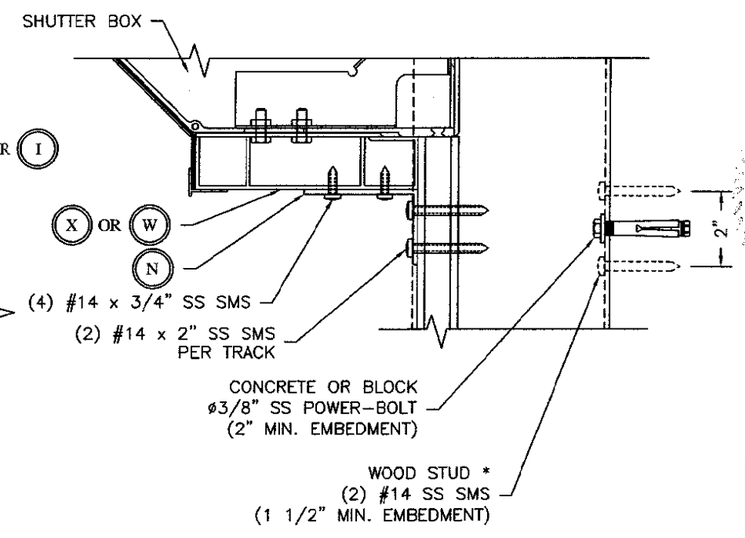

MAXIMUM ALLOWABLE 2 SPAN 5.875" HEADER WIDTH (TRACK TO TRACK) - **REINFORCED HEADER SCHEDULE 22 ***																
	STORM BAR HEIGHT UNDER HEADER															
PSF	42	48	54	60	66	72	78	84	90	96	102	108	114	120	126	132
25	240.0	240.0	234.8	224.0	214.6	206.3	199.0	192.4	186.4	181.0	176.1	171.5	167.3	163.4	159.8	156.4
30	240.0	228.0	216.3	206.2	197.5	189.8	183.0	176.9	171.4	166.4	161.8	157.6	153.8	150.2	146.8	143.7
35	225.8	212.6	201.6	192.2	184.0	176.8	170.5	164.8	159.6	155.0	150.7	146.7	143.1	139.7	136.6	133.7
40	212.6	200.1	189.7	180.8	173.1	166.3	160.3	154.9	150.1	145.6	141.6	137.9	134.5	131.3	128.4	125.6
45	201.5	189.6	179.7	171.3	163.9	157.5	151.8	146.7	142.1	137.9	134.0	130.5	127.3	124.3	121.5	118.9
50	192.0	180.7	171.2	163.1	156.1	150.0	144.5	139.6	135.2	131.2	127.6	124.2	121.1	118.3	115.6	113.1
55	183.8	172.9	163.8	156.1	149.4	143.5	138.2	133.6	129.3	125.5	122.0	118.8	115.8	113.1	110.5	108.1
60	176.6	166.1	157.4	149.9	143.4	137.8	132.7	128.2	124.2	120.5	117.1	114.0	111.2	108.5	106.1	103.8
65	170.2	160.1	151.6	144.4	138.2	132.7	127.9	123.5	119.6	116.0	112.8	109.8	107.1	104.5	102.1	99.9
70	164.5	154.7	146.5	139.5	133.5	128.2	123.5	119.3	115.5	112.1	108.9	106.0	103.4	100.9	98.6	96.5
75	159.3	149.8	141.9	135.1	129.2	124.1	119.6	115.5	111.8	108.5	105.4	102.6	100.1	97.7	95.5	93.4
80	154.6	145.4	137.6	131.1	125.4	120.4	116.0	112.0	108.5	105.2	102.3	99.6	97.0	94.7	92.6	90.6
85	150.3	141.3	133.8	127.4	121.9	117.0	112.7	108.9	105.4	102.3	99.4	96.7	94.3	92.1	90.0	88.0
90	146.4	137.6	130.3	124.1	118.7	113.9	109.7	106.0	102.6	99.5	96.7	94.2	91.8	89.6	87.5	85.6
95	142.7	134.2	127.0	120.9	115.7	111.1	107.0	103.3	100.0	97.0	94.3	91.8	89.5	87.3	85.3	83.5
100	139.4	131.0	124.0	118.1	112.9	108.4	104.4	100.8	97.6	94.7	92.0	89.6	87.3	85.2	83.3	81.4
125	125.6	118.0	111.7	106.3	101.6	97.6	94.0	90.7	87.8	85.2	82.8	80.6	78.5	76.6	74.9	73.2
150	115.3	108.3	102.5	97.5	93.2	89.5	86.2	83.2	80.5	78.1	75.9	73.8	72.0	70.2	68.6	67.1
175	107.2	100.7	95.3	90.7	86.7	83.2	80.1	77.3	74.8	72.6	70.5	68.6	66.9	65.2	63.7	62.3
200	100.7	94.6	89.5	85.1	81.4	78.1	75.2	72.6	70.2	68.1	66.1	64.4	62.7	61.2	59.8	58.5
225	95.3	89.4	84.6	80.5	76.9	73.8	71.1	68.6	66.4	64.4	62.5	60.8	59.3	57.8	56.5	54.8
250	90.6	85.1	80.5	76.5	73.2	70.2	67.6	65.2	63.1	61.2	59.4	57.8	56.4	54.2	51.6	49.3
275	86.6	81.3	76.9	73.1	69.9	67.1	64.5	62.3	60.3	58.4	56.8	54.8	51.9	49.3	46.9	44.8

* BUILDOUT AND MULLION MOUNT WITH REINFORCEMENT ANGLE

Roll-a-way By QMI

1661 GLENLAKE AVENUE
ITASCA, IL 60143
COPYRIGHT © 2008
QUALITAS MANUFACTURING INC.

DRAWING TITLE:

NOTICE OF ACCEPTANCE END RETENTION - TDI PRODUCT APPROVAL

D.L. Fowler
Professional Engineer
Texas License No.
PE 102913

11-24-10

DRAWN:	DF
DATE:	11-04-09
APPROVED:	DLF
DATE:	11-04-09
DRAWING NO:	3-01-035
SIZE: B	REV: B
SCALE:	1 : 4
SHEET:	25 OF 26

MULLION MOUNT

REINFORCED HEADER
CONNECTION
SEE R.H.SCHEDULE 22
PAGE 25 OF 26

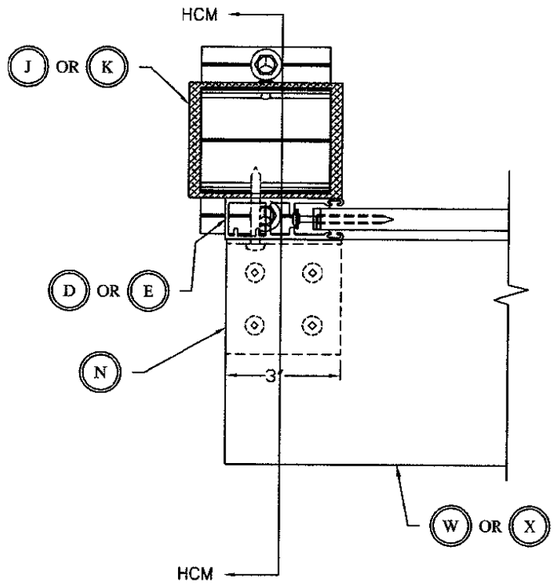

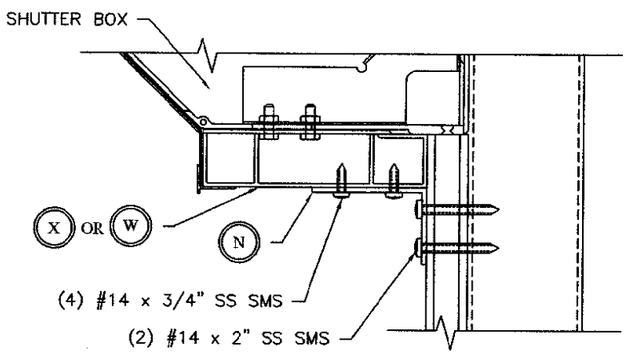

HCM SECTION

SPLIT MULLION MOUNT

REINFORCED HEADER
CONNECTION
SEE R.H.SCHEDULE 22
PAGE 25 OF 26

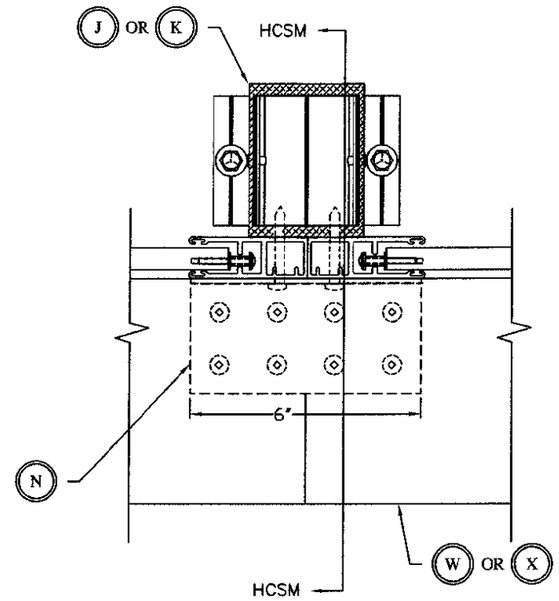

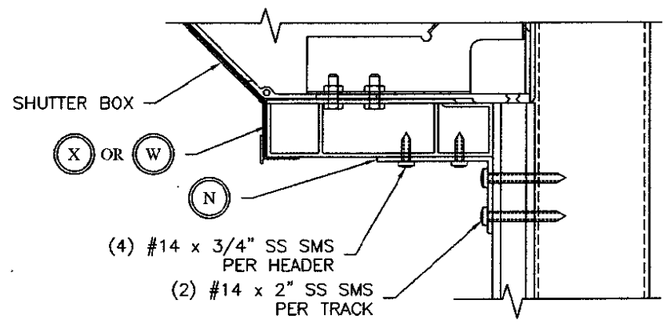

HCSM SECTION

Roll-a-way
By AMI
1661 GLENLAKE AVENUE
ITASCA, IL 60143
COPYRIGHT © 2008
QUALITAS MANUFACTURING INC.

DRAWING TITLE:

NOTICE OF ACCEPTANCE
END RETENTION - TDI
PRODUCT APPROVAL

D.L. Fowler
Professional Engineer
Texas License No.
PE 102913

11-24-10

DRAWN:	DF
DATE:	11-04-09
APPROVED:	DF
DATE:	11-04-09
DRAWING NO:	3-01-035
SIZE: B	REV: B
SCALE:	1 : 4
SHEET:	26 OF 26