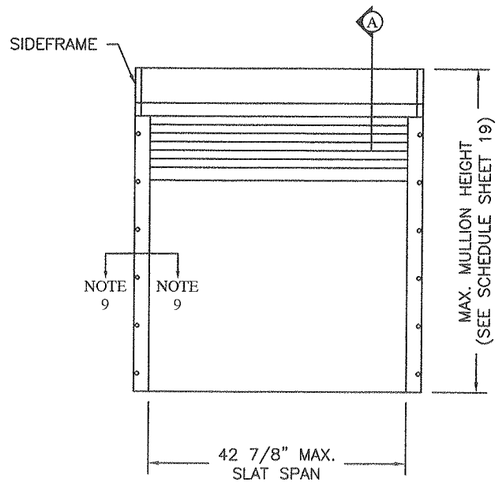

TYPICAL SINGLE UNIT ELEVATION
(NO STORM BARS REQUIRED)

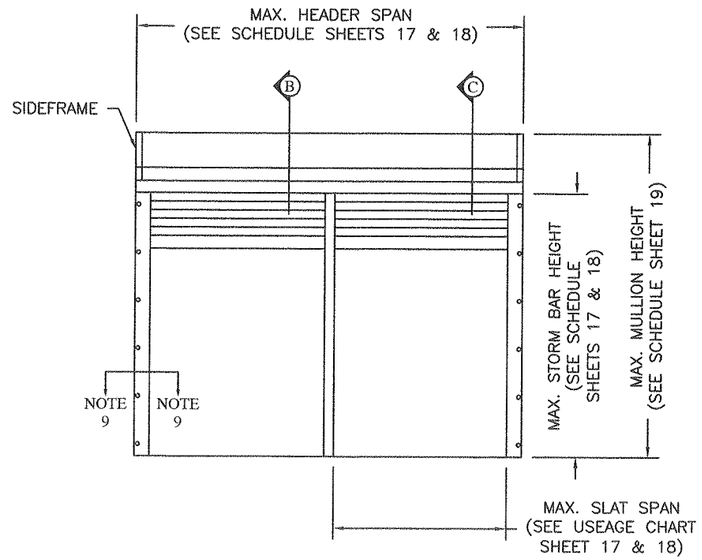

TYPICAL SINGLE UNIT ELEVATION
(STORM BARS REQUIRED)

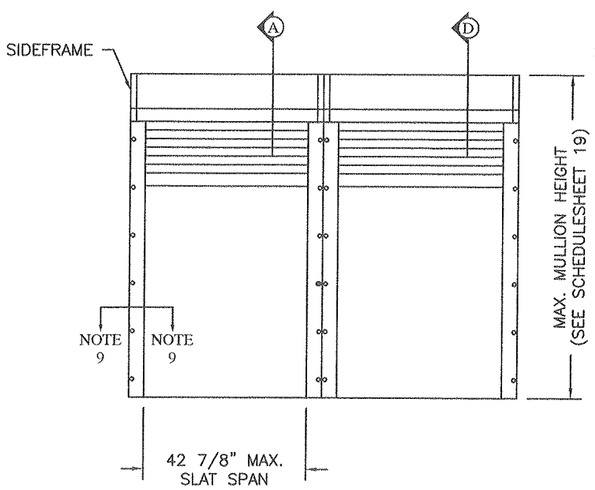

TYPICAL MULTIPLE UNIT ELEVATION
(NO STORM BARS REQUIRED)

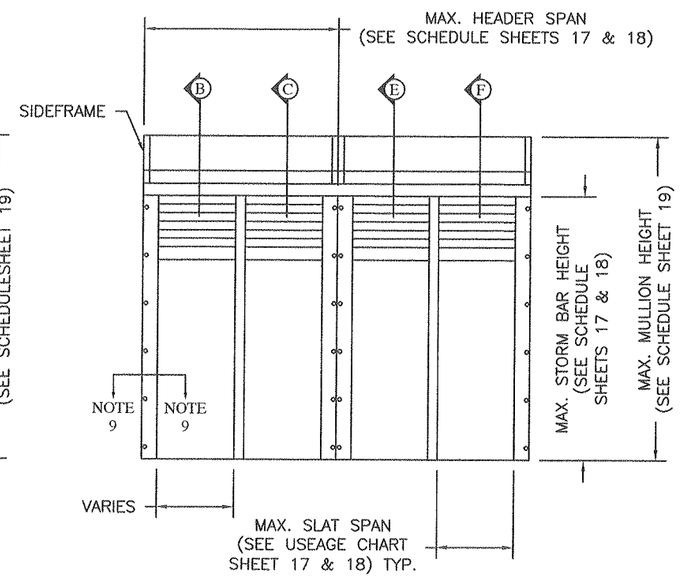

TYPICAL MULTIPLE UNIT ELEVATION
(STORM BARS REQUIRED)

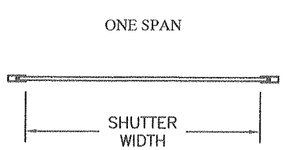

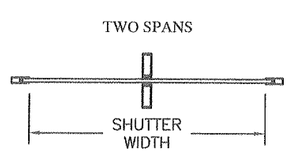

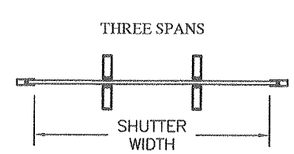

Roll-a-way™ THE ORIGINAL

BY QMI

GENERAL NOTES:

1. THIS PRODUCT IS DESIGNED IN ACCORDANCE WITH THE 2006 INTERNATIONAL BUILDING CODE AND THE 2006 TEXAS REVISIONS TO THE 2006 INTERNATIONAL BUILDING CODE. DESIGN WIND LOADS SHALL BE CALCULATED IN ACCORDANCE WITH ASCE 7-05. THIS SHUTTER PRODUCT DRAWING IS ONLY FOR SHUTTER INSTALLATIONS LOCATED 30 FEET ABOVE MEAN GRADE LEVEL (SMALL MISSILE IMPACT PROTECTION ONLY).
2. ALL ALUMINUM EXTRUSIONS SHALL BE 6063-T5 ALLOY (UNLESS OTHERWISE NOTED).
3. ALL SCREWS TO BE STAINLESS STEEL 304 OR 316 SERIES W/ 50 ksi YIELD POINT AND 90 ksi TENSILE STRENGTH, ALUMINUM, OR COATED STEEL. (SS SMS = STAINLESS STEEL SHEET METAL SCREW)
4. BOLTS TO BE 2024-T4 ALUMINUM ALLOY, GALVANIZED, OR STAINLESS STEEL WITH 36 ksi MINIMUM YIELD POINT.
5. STORM BARS SHALL REMAIN IN PLACE DURING ALL WIND EVENTS.
6. ANCHORS TO WALL SHALL BE AS FOLLOWS (UNLESS OTHERWISE NOTED):
   (A) TO EXISTING POURED CONCRETE: (3250 PSI COMPRESSIVE STRENGTH @ 28 DAYS)
   - Ø1/4" x 2 1/4" TAPCON ANCHORS, AS MANUFACTURED BY ELCO INDUSTRIES
   - Ø1/4" x 2 1/4" RAWL PERMASEAL TAPPERS, AS MANUFACTURED BY THE RAWL PLUG COMPANY, INC.
   - Ø5/16" POWER BOLTS, AS MANUFACTURED BY POWERS FASTENING, INC.
   - Ø3/8" POWER BOLTS, AS MANUFACTURED BY POWERS FASTENING, INC.
   - Ø1/2" POWER BOLTS, AS MANUFACTURED BY POWERS FASTENING, INC.

   NOTES:
   A.1) MINIMUM EMBEDMENT OF TAPCON ANCHORS AND RAWL PERMASEAL TAPPER ANCHORS INTO CONCRETE SHALL BE 1 3/4".
   A.2) MINIMUM EMBEDMENT OF Ø3/8" & Ø5/16" POWER BOLT ANCHORS SHALL BE 2", Ø1/2" POWER BOLT SHALL BE 2 1/2".
   A.3) IN CASE THAT PRECAST STONE, PRECAST CONCRETE PANELS, OR PAVERS BE FOUND ON THE EXISTING WALL OR FLOOR, ANCHORS SHALL BE LONG ENOUGH TO REACH THE MAIN STRUCTURE BEHIND SUCH PANELS. EMBEDMENT SHALL BE PER THE LISTED MINIMUMS.

   (B) TO EXISTING CONCRETE BLOCK WALL:
   - Ø1/4" x 2 1/4" TAPCON ANCHORS, AS MANUFACTURED BY ELCO INDUSTRIES
   - Ø1/4" x 2 1/4" RAWL PERMASEAL TAPPER, AS MANUFACTURED BY THE RAWL PLUG COMPANY, INC.
   - Ø3/8" POWER BOLTS, AS MANUFACTURED BY POWERS FASTENING, INC.
   - Ø1/2" POWER BOLTS, AS MANUFACTURED BY POWERS FASTENING, INC.

   NOTES:
   B.1) MINIMUM EMBEDMENT OF TAPCON ANCHORS AND RAWL PERMASEAL TAPPER ANCHORS INTO THE CONCRETE BLOCK UNIT SHALL BE 1 1/4".
   B.2) MINIMUM EMBEDMENT OF Ø3/8" POWER BOLT ANCHORS SHALL BE 2", Ø1/2" POWER BOLT SHALL BE 2 1/2".
   B.3) IN CASE THAT PRECAST STONE, PRECAST CONCRETE PANELS, BE FOUND ON THE EXISTING WALL, ANCHORS SHALL BE LONG ENOUGH TO REACH THE MAIN STRUCTURE BEHIND SUCH PANELS. EMBEDMENT SHALL BE PER THE LISTED MINIMUMS.

   (C) ANCHORS SHALL BE INSTALLED FOLLOWING ALL OF THE RECOMMENDATIONS AND SPECIFICATIONS OF THE ANCHOR'S MANUFACTURER.
   (D) STORM BAR ANCHORAGE TO WOOD IS COVERED IN THIS DRAWING.
7. IT SHALL BE THE RESPONSIBILITY OF THE INSTALLATION CONTRACTOR TO VERIFY THE SOUNDNESS OF THE STRUCTURE WHERE SHUTTER IS TO BE ATTACHED TO ENSURE PROPER ANCHORAGE.
8. ROLL-UP MECHANISM NOT PART OF THIS DESIGN, BUT IT SHALL BE CERTIFIED BY AN INDEPENDENT TESTING AGENCY.
9. FOUR AVAILABLE END MOUNTING CONDITIONS ARE DEPICTED ON SHEET 9 OF 20.
   WALL MOUNT, JAMB MOUNT, BUILDOUT MOUNT AND MULLION MOUNT. ANY OTHER CONDITIONS SHALL BE ENGINEERED ON A CASE BY CASE BASIS, PROCESSED THRU A ONE TIME SITE APPROVAL.END CONDITIONS MAY BE MIXED/COMBINED.
10. LINEAR INTERPOLATION IS ALLOWED FOR ALL GRAPHS, CHARTS AND SCHEDULES.
11. MINIMUM SLAT ENGAGEMENT IS 1.25" FOR 3 IN. TRACK AND 1" FOR 2 1/2" TRACK.
12. ALTERATIONS OR ADDITIONS TO THIS DRAWING ARE NOT PERMITTED. DOCUMENT SHALL BEAR THE ORIGINAL SEAL, SIGNATURE AND DATE OF THE PROFESSIONAL ENGINEER LISTED.
13. THIS PRODUCT APPROVAL IS SUITABLE FOR USE ONLY AS SPECIFICALLY STATED ON THE COMBINED PAGES OF THE ENTIRE DOCUMENT. ANY DEVIATIONS SHALL BE REVIEWED AND APPROVED SEPARATELY.

Donald L. Fowler
Professional Engineer
Texas License No.
102913

2-3-09

REVISION

REV	DESCRIPTION
A	FBC 2004 REVISION
B	NAME CHANGE 2008
C	
D	
E	

THIRD ANGLE PROJECTION

ELEVATIONS

Roll-a-way® BY QMI

1661 GLENLAKE AVENUE
ITASCA, IL 60143

COPYRIGHT © 2008 QUALITAS MFG. INC.

TITLE: EXTRUDED PVC SLAT (P55) ROLL-UP SHUTTER APPROVAL DRAWING

DRAWN: DJN	DATE: 03-01-01	REV: B	
APPROVED: DLF	DATE: 03-21-09		
EST. AREA: N/A	EST. WT: LBS/FT		
SIZE: B	DRAWING NO: 3-01-100	SCALE: 1/2" = 1'-0"	
FSCM NO:		SHEET 1 OF 20	

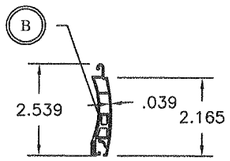

A — P55 SLAT DETAIL
PVC

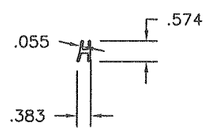

B — SLAT REBAR
ALUMINUM 6005-T5

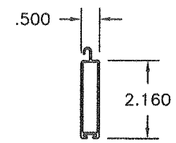

C — BOTTOM SLAT DETAIL
ALUMINUM 6063-T6

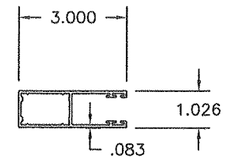

D — SYSTEM I TRACK
ALUMINUM 6063-T6

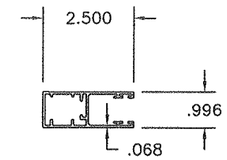

E — SYSTEM II TRACK
ALUMINUM 6063-T6

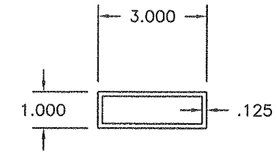

F — TUBE 1" x 3" x .125"
ALUMINUM 6063-T5

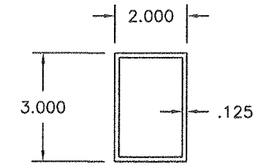

G — TUBE 2" x 3" x 1/8"
ALUMINUM 6005-T5

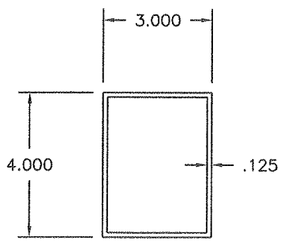

H — TUBE 3" x 4" x 1/8"
ALUMINUM 6063-T6

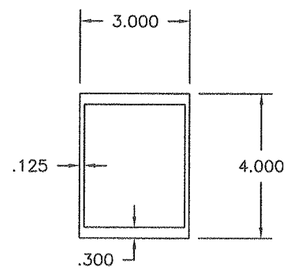

I — MULLION 3" x 4" HEAVY DUTY
ALUMINUM 6005-T5

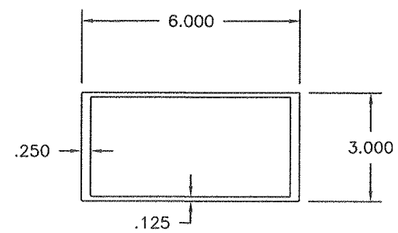

J — MULLION 3" x 6" HEAVY DUTY
ALUMINUM 6005-T5

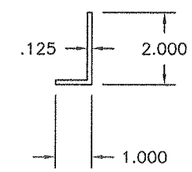

K — ANGLE 1" x 2" x .125"
ALUMINUM 6063-T5

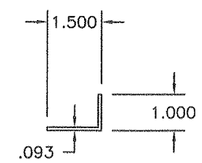

L — ANGLE 1" x 1 1/2" x 3/32"
ALUMINUM 6063-T5

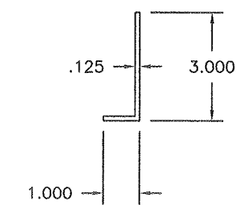

M — ANGLE 1" x 3" x 1/8"
ALUMINUM 6063-T5

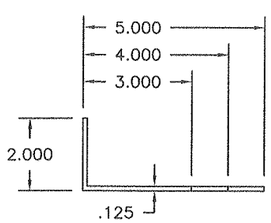

N — ANGLE
2" x 3", 4" OR 5" x 1/8"
ALUMINUM 6063-T5

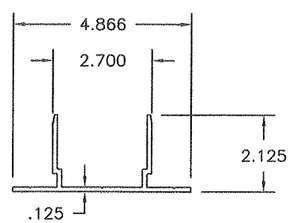

O — MULLION BASE 3" x 4" (L=3 3/8")
MULLION BASE 3" x 6" (L=5 7/16")
ALUMINUM 6005-T5

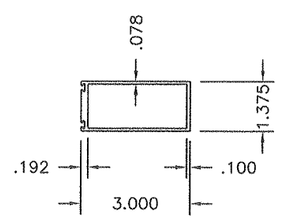

P — 3" STORM BAR
ALUMINUM 6005-T5

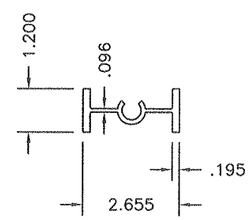

Q — 3" STORM BAR INSERT
ALUMINUM 6005-T5

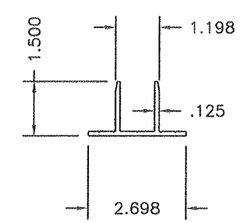

R — 3" FIXED STORM BAR BASE,
STANDARD
(LENGTH = 2 5/8")
ALUMINUM 6063-T5

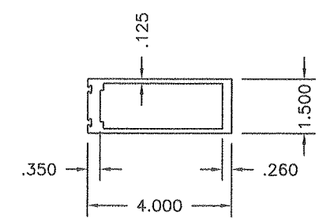

S — 4" STORM BAR
ALUMINUM 6005-T5

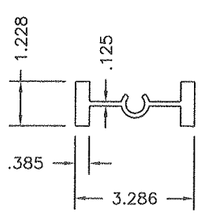

T — 4" STORM BAR INSERT
ALUMINUM 6063-T6

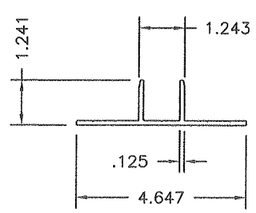

U — 4" FIXED STORM BAR BASE,
STANDARD
(LENGTH = 3 9/32")
ALUMINUM 6005-T5

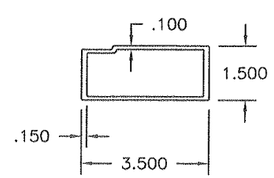

V — 3 1/2" HEADER
ALLOY 6005-T5

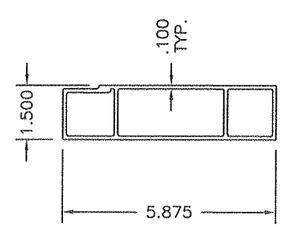

W — HEADER 5 7/8"
ALUMINUM 6005-T5

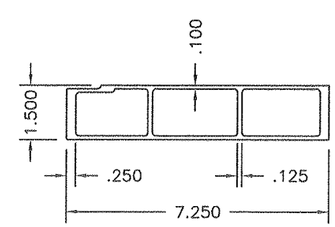

X — HEADER 7 1/4"
ALUMINUM 6005-T5

Donald L. Fowler
Professional Engineer
Texas License No.
102913

8-3-09

REV	DESCRIPTION
A	NAME CHANGE 2006
B	
C	
D	
E	

REVISION

THIRD ANGLE PROJECTION

COMPONENTS

Rollaway BY QMI
1661 GLENLAKE AVENUE
ITASCA, IL 60143

COPYRIGHT © 2008 QUALITAS MFG. INC.

TITLE: EXTRUDED PVC SLAT (P55)
ROLL-UP SHUTTER
APPROVAL DRAWING

DRAWN: DJN	DATE: 03-01-01	REV: A	
APPROVED: DLF	DATE: 05-21-09	LB/FT	
EST. AREA:	EST. WT:		
SIZE: B	DRAWING NO: 3-01-100	SCALE: 1:4	
FSCM NO:		SHEET 2 OF 20	

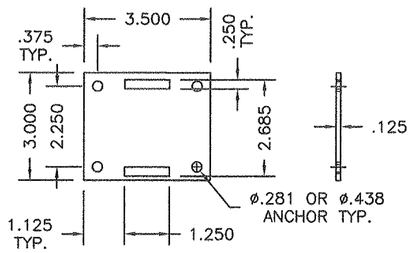

AB 3" REMOVABLE STORM BAR BASE
ALUMINUM 6061-T6 OR 6005-T5

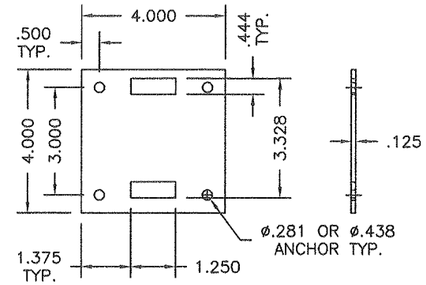

AC 4" REMOVABLE STORM BAR BASE
ALUMINUM 6061-T6 OR 6005-T5

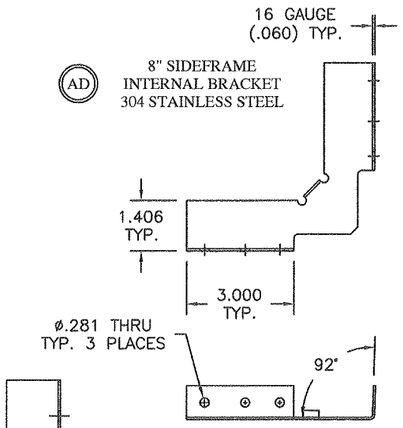

AD 8" SIDEFRAME
INTERNAL BRACKET
304 STAINLESS STEEL

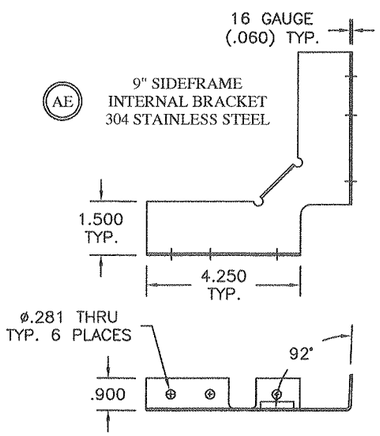

AE 9" SIDEFRAME
INTERNAL BRACKET
304 STAINLESS STEEL

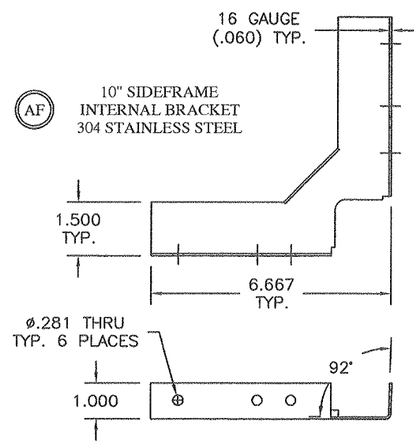

AF 10" SIDEFRAME
INTERNAL BRACKET
304 STAINLESS STEEL

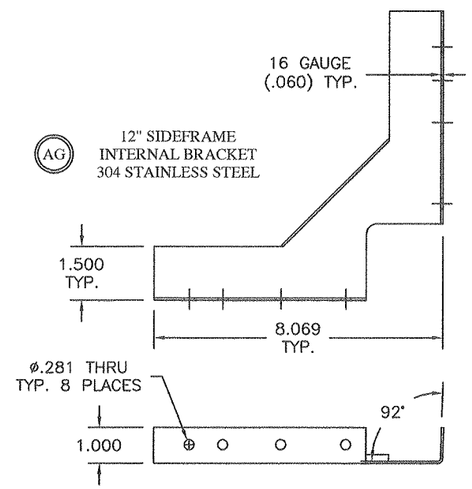

AG 12" SIDEFRAME
INTERNAL BRACKET
304 STAINLESS STEEL

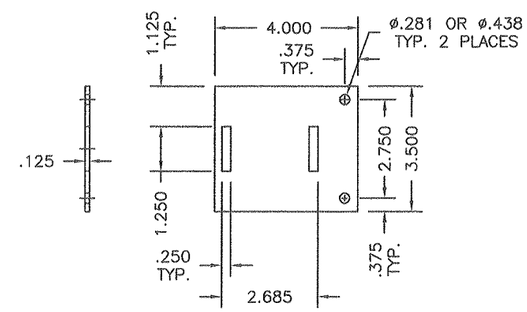

AH 3" REMOVABLE STORM BAR BASE,
EXTENDED
ALUMINUM 6061-T6 OR 6005-T5

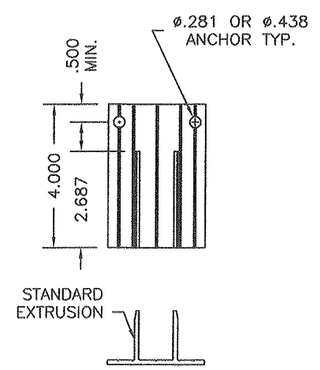

AI 3" FIXED STORM BAR BASE,
EXTENDED
ALUMINUM 6061-T6 OR 6005-T5

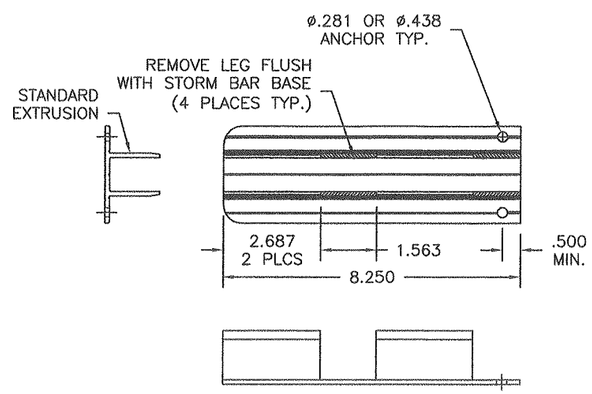

AJ 3" FIXED STORM BAR BASE,
DOUBLE
ALUMINUM 6061-T6 OR 6005-T5

HEADER REINFORCEMENT ANGLE
2 x 5 x 1/8" ANGLE, 6063-T6 ALLOY
(USE SECTION B ONLY)

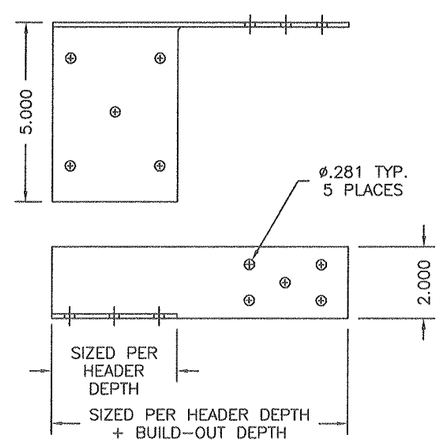

Donald L. Fowler
Professional Engineer
Texas License No.
102913

D L Fowler
8-3-09

REVISION		
REV	DESCRIPTION	
A	NAME CHANGE 2008	
B		
C		
D		
E		

THIRD ANGLE PROJECTION

COMPONENTS

Roll-a-way

1661 GLENLAKE AVENUE
ITASCA, IL 60143

COPYRIGHT © 2008 QUALITAS MFG. INC.

TITLE: EXTRUDED PVC SLAT (P55)
ROLL-UP SHUTTER
APPROVAL DRAWING

DRAWN: DJN	DATE: 03-01-01	REV: A	
APPROVED: DLF	DATE: 05-21-09		
EST. AREA: IN²	EST. WT: LB/FT		
SIZE: B	DRAWING NO: 3-01-100	SCALE: 1:4	SHEET 3 OF 20
FSCM NO:			

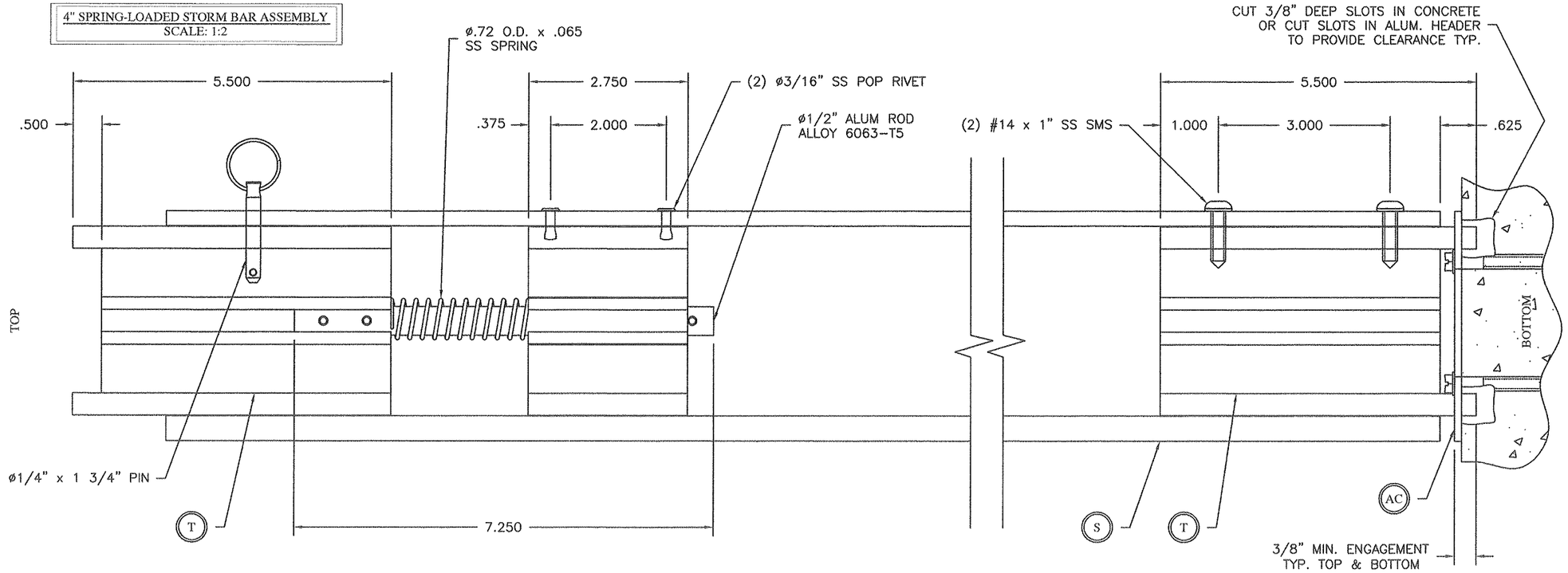

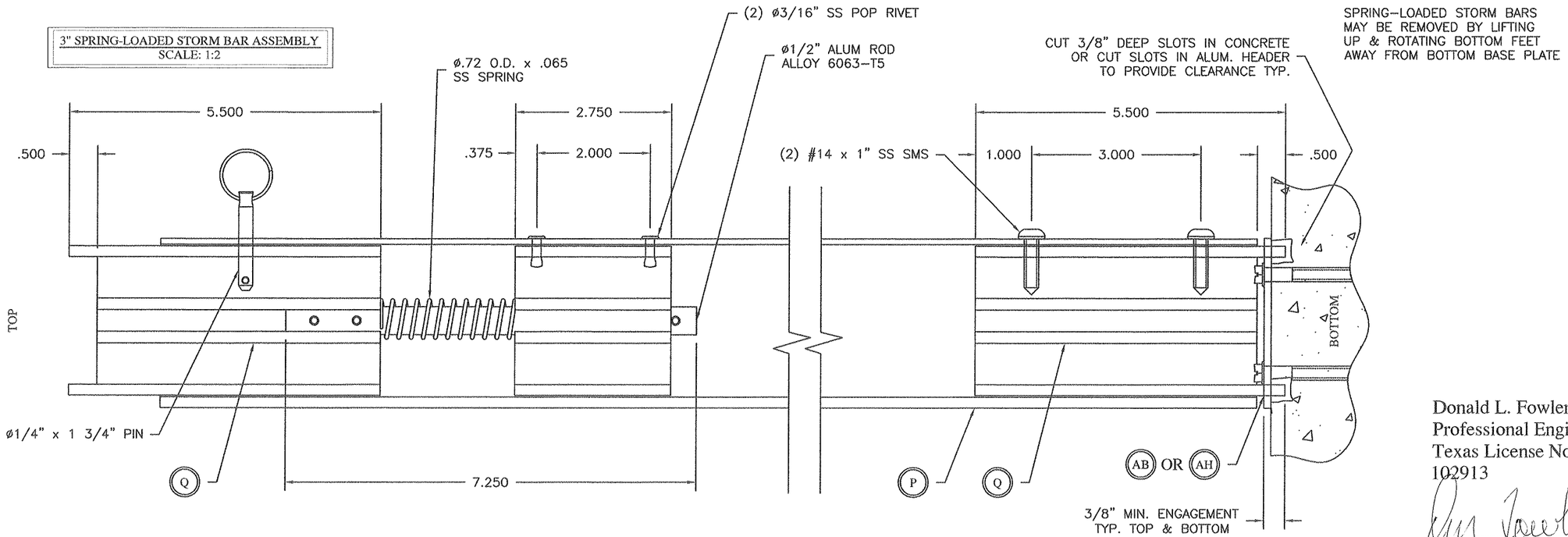

Donald L. Fowler
Professional Engineer
Texas License No.
102913

8-3-09

REV	DESCRIPTION
A	FBC 2004 REVISION
B	NAME CHANGE 2008
C	
D	
E	

REVISION

THIRD ANGLE PROJECTION

SPRING-LOADED STORM BARS (SLSB)

Roll-a-way BY QMI
1661 GLENLAKE AVENUE
ITASCA, IL 60143

COPYRIGHT © 2008 QUALITAS MFG. INC.

TITLE: EXTRUDED PVC SLAT (P55) ROLL-UP SHUTTER APPROVAL DRAWING

DRAWN: DJN	DATE: 03-01-01		
APPROVED: DKLF	DATE: 05-21-09		
EST. AREA:	EST. WT:		
SIZE: B	DRAWING NO: 3-01-100	REV: B	
FSCM NO:	SCALE: 1:2	SHEET 4 OF 20	

4" SPRING-LOADED STORM BAR ASSEMBLY DETAIL

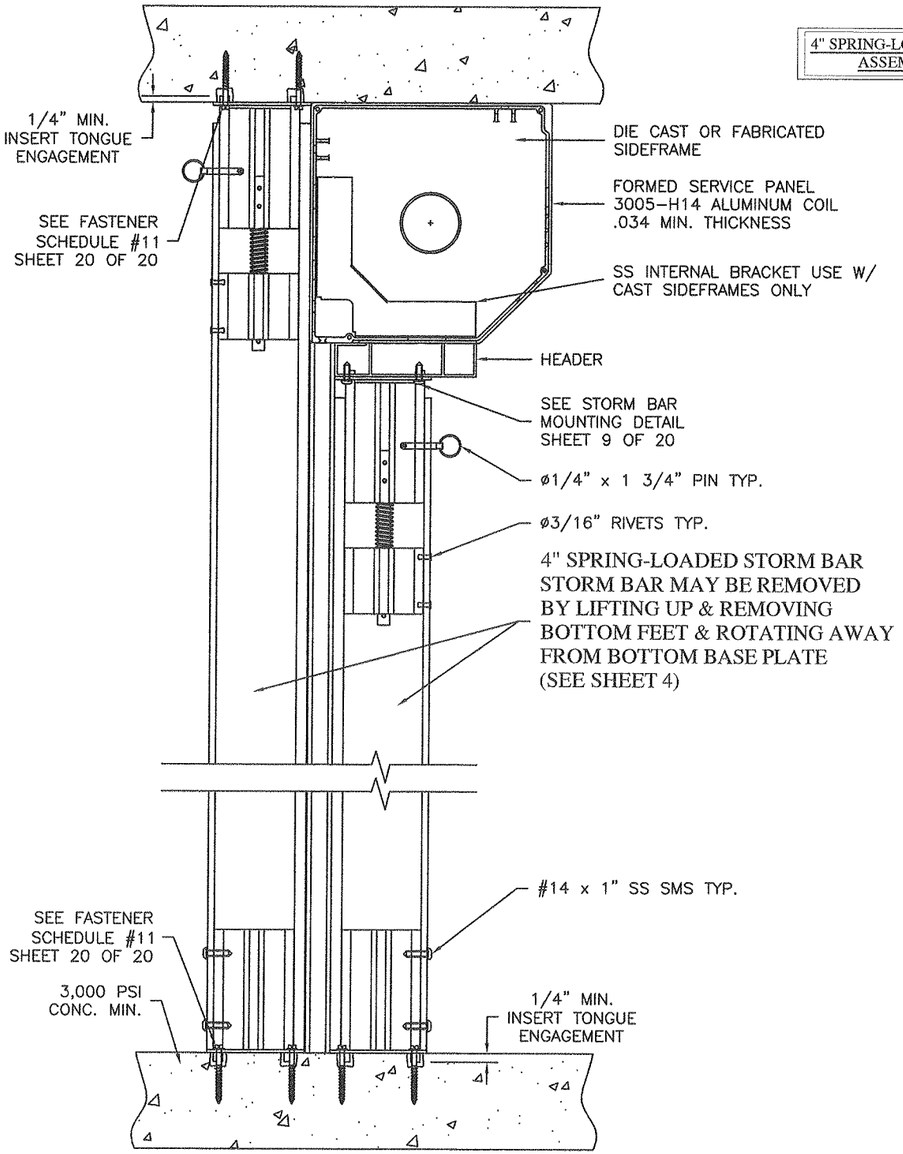

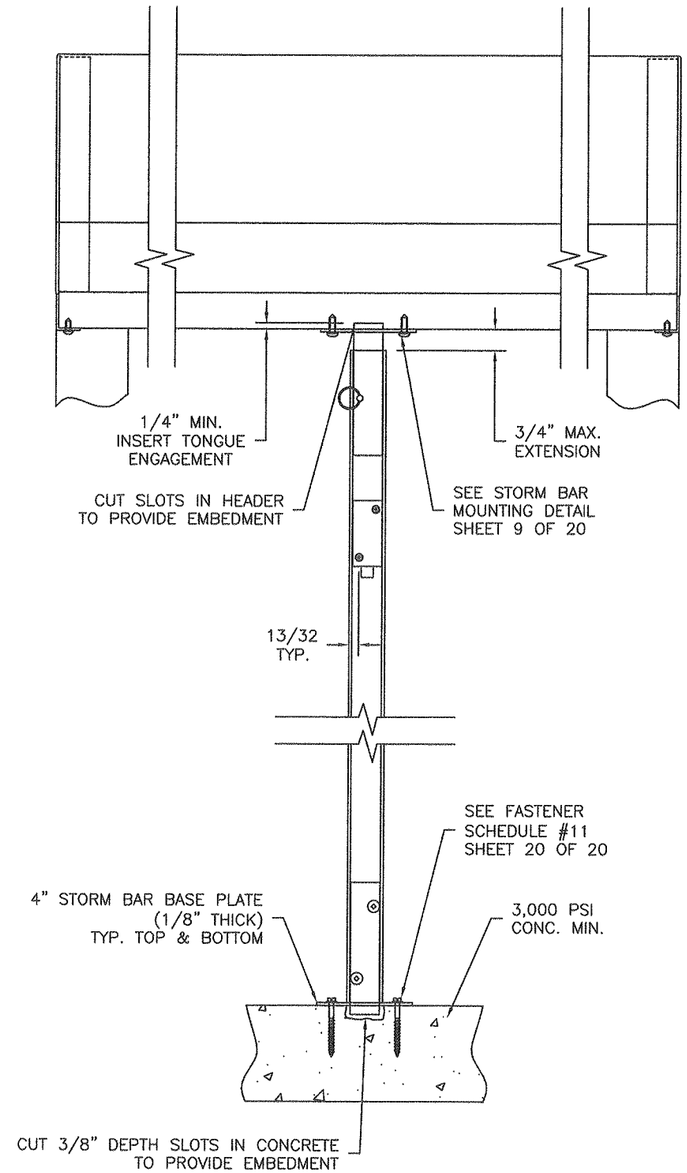

NOTES:
1. SEE SHEET 17 & 18 FOR ALLOWABLE UNIT HEIGHTS.
2. ADHESIVE WARNING LABELS SHALL BE PLACED ON THE BOTTOM SIDE OF HEADER WITHIN 6" OF STORM BAR.

Donald L. Fowler
Professional Engineer
Texas License No.
102913

Don Fowler
8-3-09

REV	DESCRIPTION
A	NAME CHANGE 2008
B	
C	
D	
E	

REVISION

THIRD ANGLE PROJECTION

SPRING-LOADED STORM BARS (SLSB)

Roll-a-way BY QMI

1661 GLENLAKE AVENUE
ITASCA, IL 60143

COPYRIGHT © 2008 QUALITAS MFG. INC.

TITLE: EXTRUDED PVC SLAT (P55) ROLL-UP SHUTTER APPROVAL DRAWING

DRAWN: DJN	DATE: 03-01-01		
APPROVED: DLF	DATE: 3-22-09		
EST. AREA: IN²	EST. WT: LB/FT		
SIZE: B	DRAWING NO: 3-01-100	REV: A	
FSCM NO:	SCALE: 2" = 1'-0"	SHEET 5 OF 20	

3" SPRING-LOADED STORM BAR
ASSEMBLY DETAIL

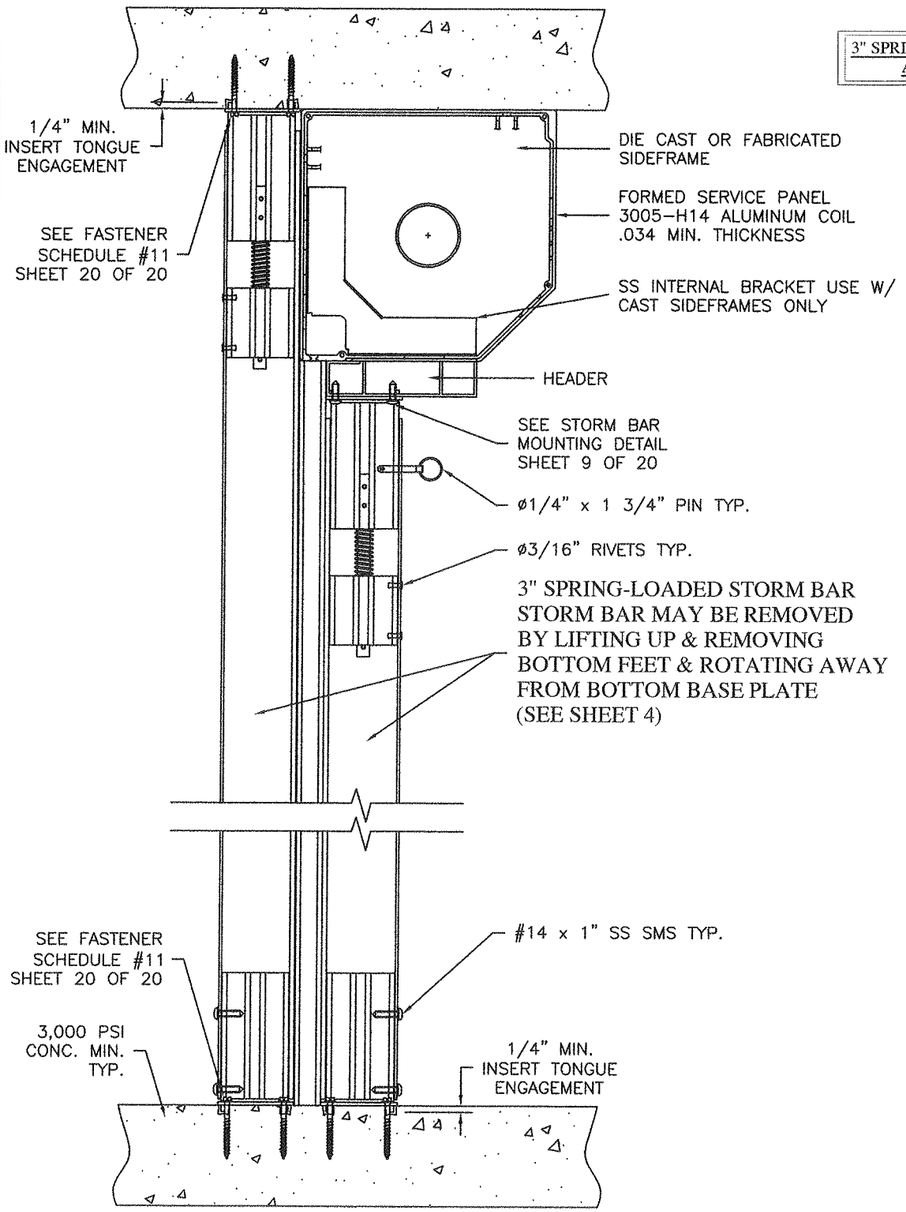

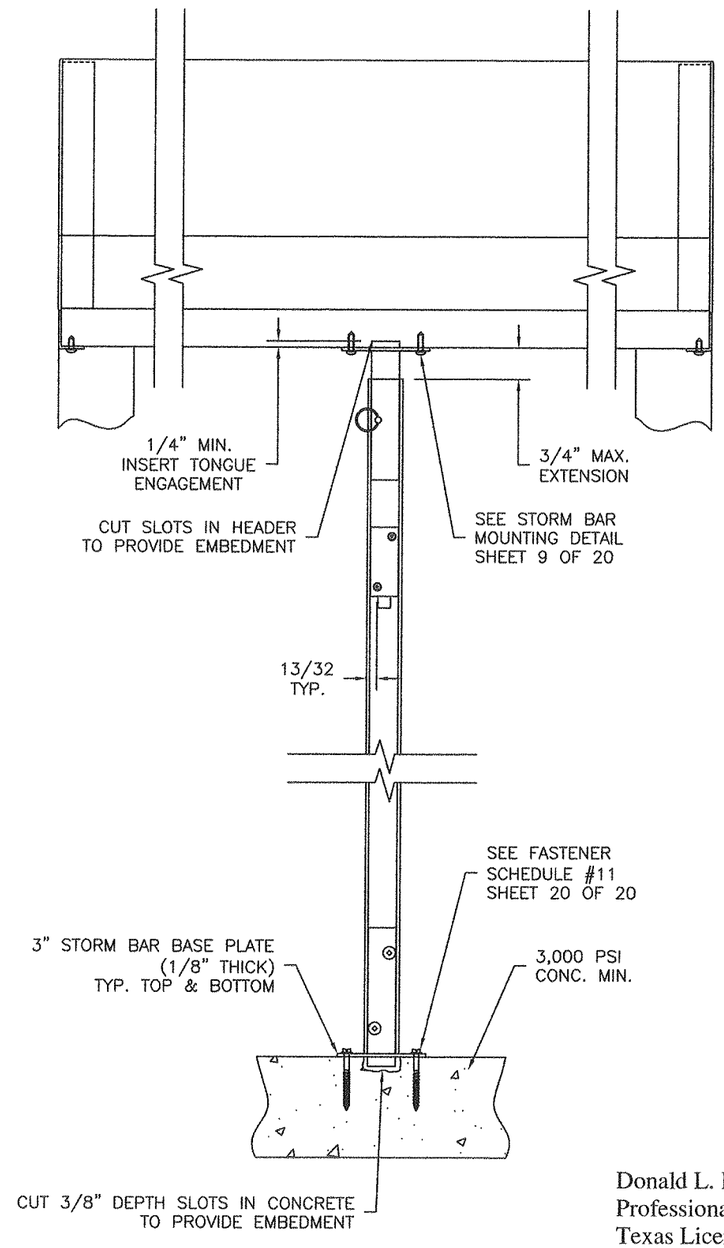

NOTES:
1. SEE SHEET 17 & 18 FOR ALLOWABLE UNIT HEIGHTS.
2. ADHESIVE WARNING LABELS SHALL BE PLACED ON THE BOTTOM SIDE OF HEADER WITHIN 6" OF STORM BAR.

Donald L. Fowler
Professional Engineer
Texas License No.
102913

8-3-09

REVISION	
REV	DESCRIPTION
A	NAME CHANGE 2008
B	
C	
D	
E	

THIRD ANGLE PROJECTION

SPRING-LOADED STORM BARS (SLSB)

Roll-a-way

1661 GLENLAKE AVENUE
ITASCA, IL 60143

COPYRIGHT © 2008 QUALITAS MFG. INC.

TITLE: EXTRUDED PVC SLAT (P55) ROLL-UP SHUTTER APPROVAL DRAWING

DRAWN: DJN DATE: 05-01-01
APPROVED: DLF DATE: 05-22-09
EST. AREA: EST. WT: LBS
SIZE: B DRAWING NO: 3-01-100 REV: A
SCALE: 2" = 1'-0"
FSCM NO: SHEET 6 OF 20

3" SPRING-LOADED STORM BAR
TO BUILD-OUT TUBE

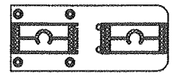

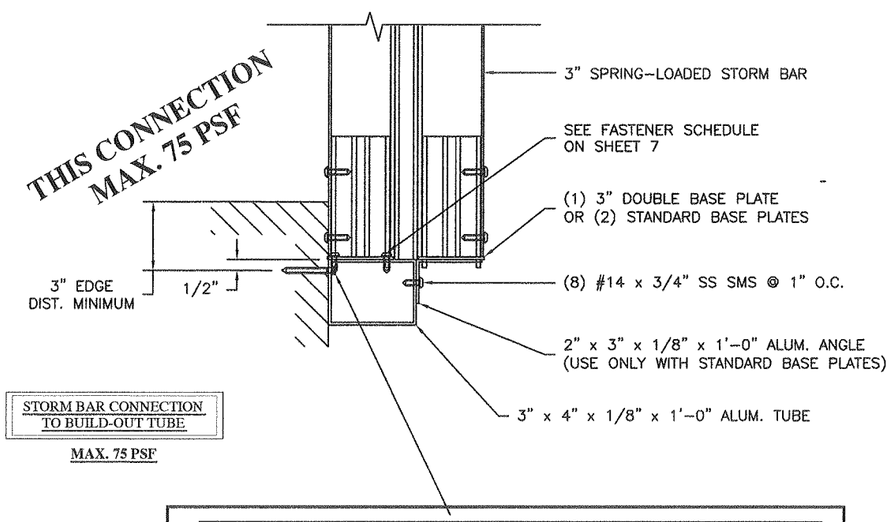

STORM BAR CONNECTION
TO BUILD-OUT TUBE

MAX. 75 PSF

CONCRETE	MINIMUM (4) ø1/4" ELCO TAPCONS (1.75" EMB.) @ 2.5" O.C. IN 3250 PSI CONCRETE	CAPACITY 1535 LBS
BLOCK	MINIMUM (7) ø1/4" RAWL TAPPER (1.5" EMB.) @ 2.5" O.C. IN CONCRETE BLOCK (2000 PSI GROUT)	CAPACITY 1575 LBS
WOOD	MINIMUM (5) ø1/4" LAG SCREWS (2" EMB.) @ 3" O.C. IN WOOD (S.G.= 0.55)	CAPACITY 1535 LBS

TYPICAL ANCHORS
A - 1/4 ELCO TAPCON 1.75" EMB 3320 PSI CONCRETE
A - 1/4 ELCO TAPCON 1.25" EMB C.BLOCK } E. DIST. 3" ANCHOR SPACING 2.5"
E - 1/4 LAG SCREW 2" EMB S.G = 0.55
F - # 14 SS SMS FULL 1/8 PLATE
NOTE: EMBEDMENT INTO CONCRETE BEYOND STUCCO, TILES,
SEE GENERAL NOTE 6, SHEET 1.

ANCHORS PER SIDE	ANCHOR TYPE	BASE MATERIAL	CONNECTION CAPACITY (LBS)	
1	A	CONC.	950	
	A	BLOCK	796	
	E	WOOD	616	
	F	ALUM.	1032	
2	A	CONC.	1900	
	A	BLOCK	1592	
	E	WOOD	1232	
	F	ALUM.	2064	75
3	E	WOOD	1848	

3" DOUBLE BASE PLATE
ALLOY 6061-T6

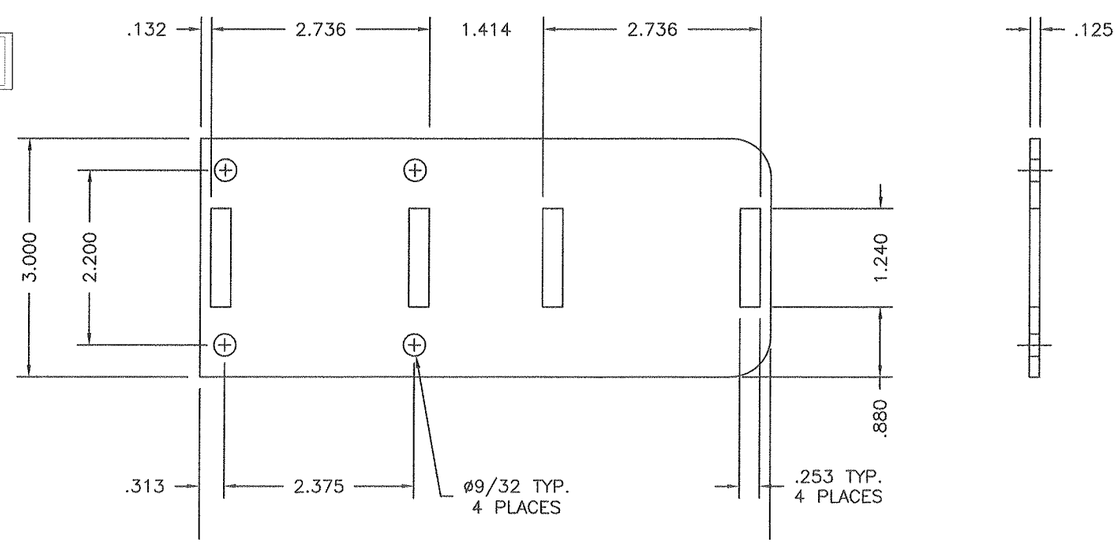

Donald L. Fowler
Professional Engineer
Texas License No.
102913

8-3-09

REV	DESCRIPTION
A	FBC 2004 CHANGES
B	NAME CHANGE 2008
C	
D	
E	

REVISION

THIRD ANGLE PROJECTION

SPRING-LOADED STORM BARS (SLSB)

Roll-a-way BY DM

1661 GLEN LAKE AVENUE
ITASCA, IL 60143

COPYRIGHT © 2008 QUALITAS MFG. INC.

TITLE: EXTRUDED PVC SLAT (P55) ROLL-UP SHUTTER APPROVAL DRAWING

DRAWN: DJN DATE: 05-01-01
APPROVED: DLF DATE: 05-22-09
EST. AREA: EST. WT: LB/FT
SIZE: B DRAWING NO: 3-01-100 REV: B
FSCM NO: SCALE: 2" = 1'-0"
SHEET 7 OF 20

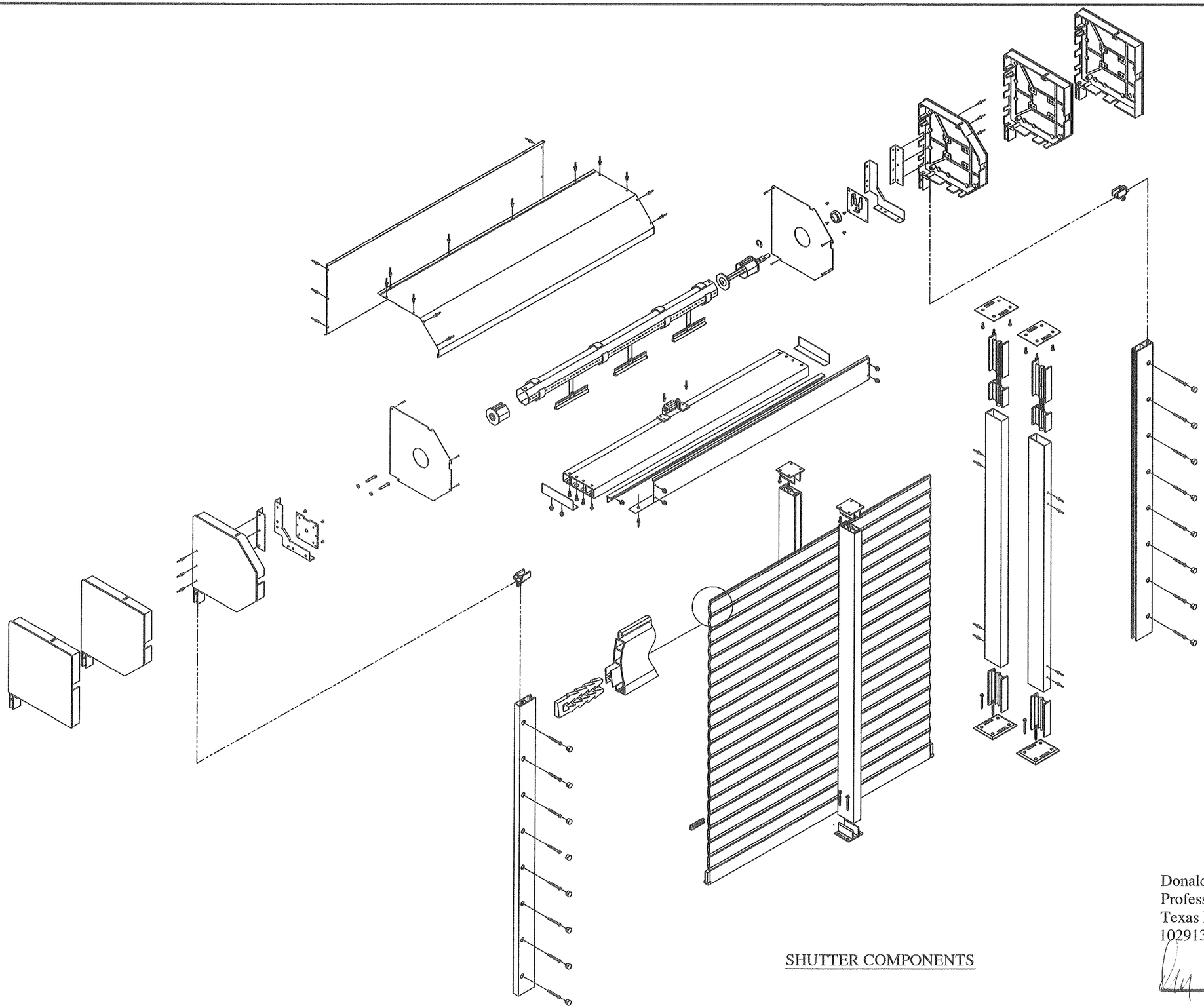

SHUTTER COMPONENTS

Donald L. Fowler
Professional Engineer
Texas License No.
102913

8-3-09

REVISION	
REV	DESCRIPTION
A	NAME CHANGE 2006
B	
C	
D	
E	

THIRD ANGLE PROJECTION

SHUTTER ASSEMBLY

Roll-a-way BY QMI

1661 GLENLAKE AVENUE
ITASCA, IL 60143

COPYRIGHT © 2008 QUALITAS MFG. INC.

TITLE: EXTRUDED PVC SLAT (P55) ROLL-UP SHUTTER APPROVAL DRAWING

DRAWN: DJN	DATE: 03-01-01		
APPROVED: DLF	DATE: 05-22-09		
EST. AREA:	EST. WT:		
SIZE: B	DRAWING NO: 3-01-100	REV: A	
FSCM NO:	SCALE: N.T.S.	SHEET 8 OF 20	

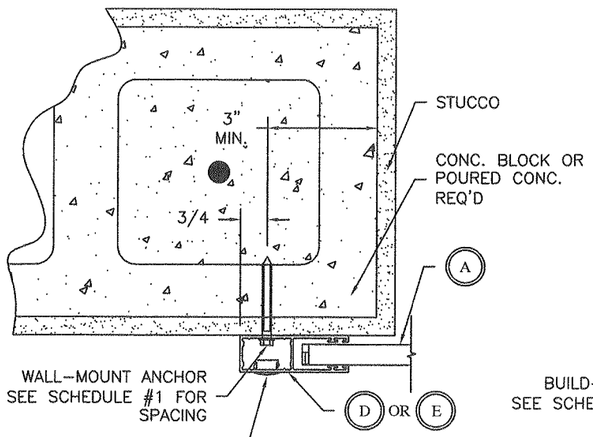

WALL MOUNT
SCALE: 1:4

MOUNTING CONDITION #1

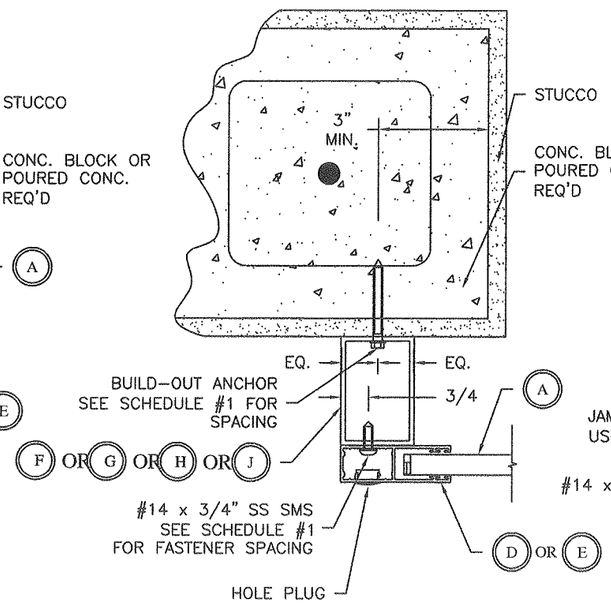

BUILD OUT
SCALE: 1:4

MOUNTING CONDITION #2

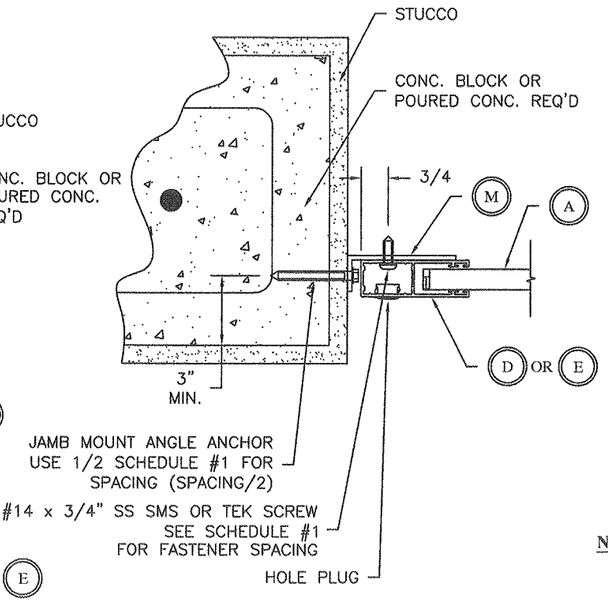

JAMB MOUNT
SCALE: 1:4

MOUNTING CONDITION #3

SCHEDULE #1	
MAXIMUM FASTENER SPACING CHART	
DESIGN PRESSURE (P.S.F.)	FASTENER SPACING (IN.)
26	16
30.6	15
35.2	14
39.8	14
44.4	13
49	12
53.6	12
58.2	11
62.8	10
67.4	10
72	9
76.6	8
81.2	8
85.8	7
90.4	6
95	6

NOTE: 1. FASTENER SPACING SHOWN IS FOR ALL TRACK CONNECTIONS IN ALL DETAIL TYPES.
2. FASTENER SPACING INCLUDES CONCRETE ANCHOR SPACING FOR ALL MOUNTING CONDITIONS. ANY FASTENERS PER GENERAL NOTE 6, PAGE 1.

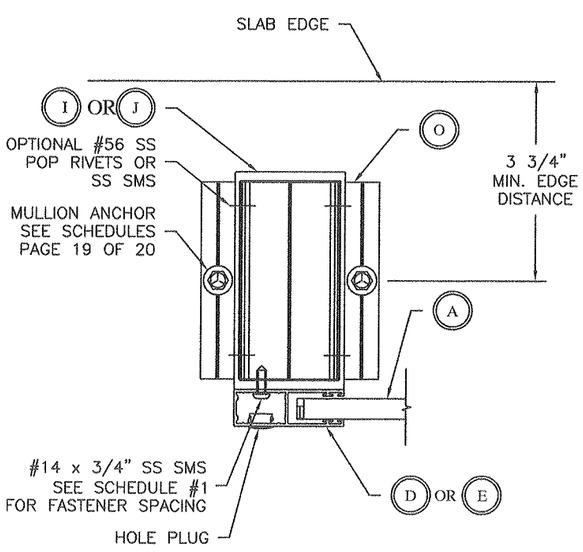

END MULLION MOUNT
SCALE 1:4

MOUNTING CONDITION #4

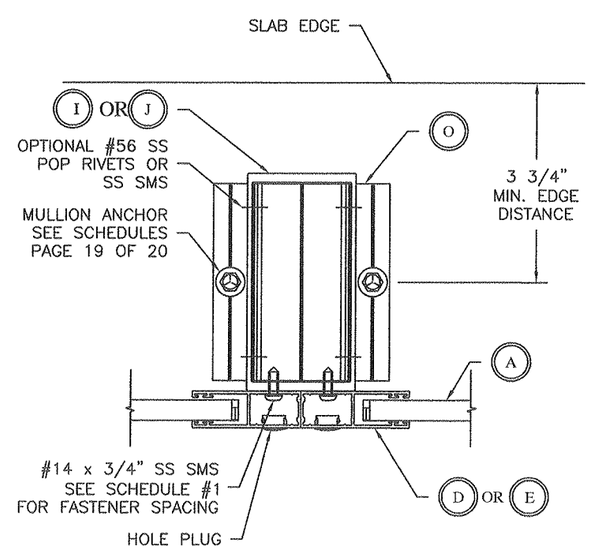

MIDDLE MULLION MOUNT
SCALE 1:4

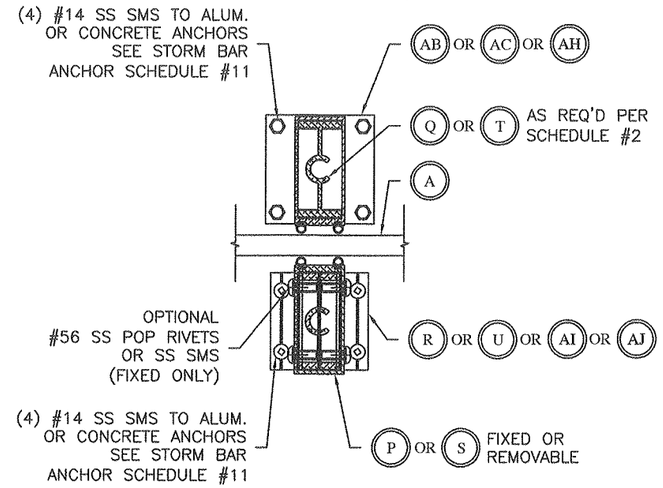

STORM BAR MOUNTING DETAIL
SCALE 1:4

Donald L. Fowler
Professional Engineer
Texas License No.
102913

Don Fowler
8-23-09

REVISION

REV	DESCRIPTION
A	FBC 2004 REVISION
B	NAME CHANGE 2008
C	
D	
E	

THIRD ANGLE PROJECTION

MOUNTING DETAILS

Roll-a-way BY QMS
1661 GLENLAKE AVENUE
ITASCA, IL 60143

COPYRIGHT © 2008 QUALITAS MFG. INC.

TITLE: EXTRUDED PVC SLAT (P55) ROLL-UP SHUTTER APPROVAL DRAWING

DRAWN: DJN DATE: 03-01-01
APPROVED: DLF DATE: 05-22-09
EST. AREA: EST. WT:
SIZE: B DRAWING NO: 3-01-100 REV: B
FSCM NO: SCALE: 1:4
SHEET 9 OF 20

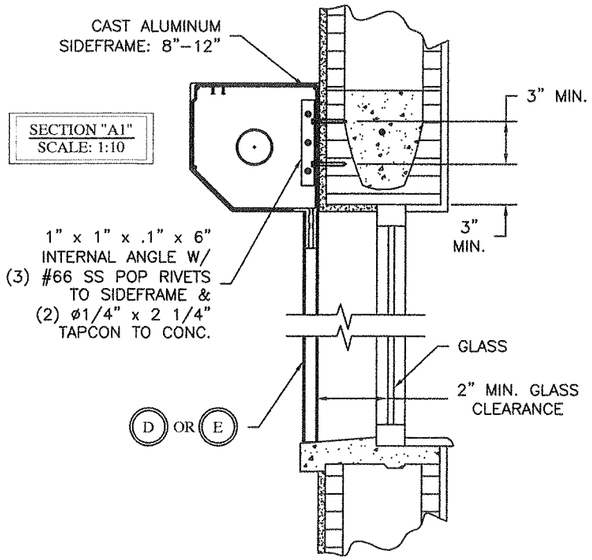

WALL MOUNT

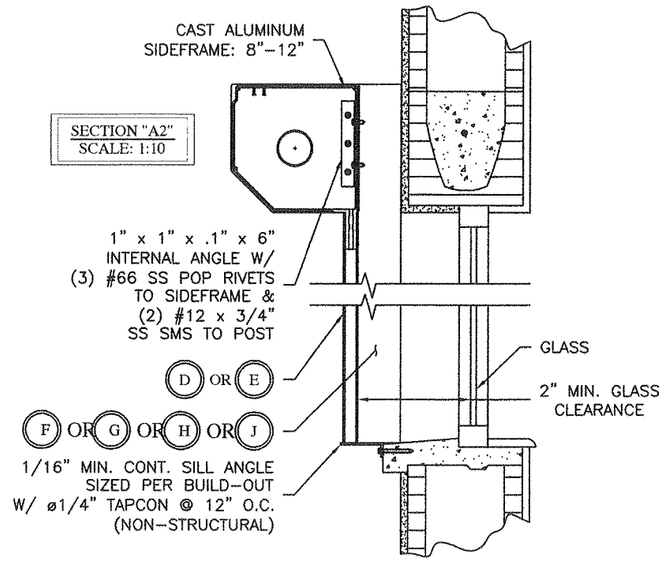

BUILDOUT MOUNT

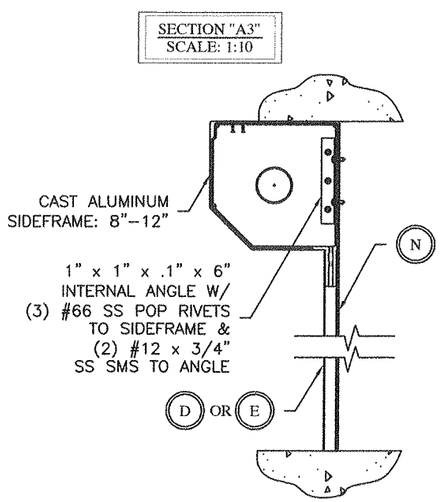

JAMB WALL

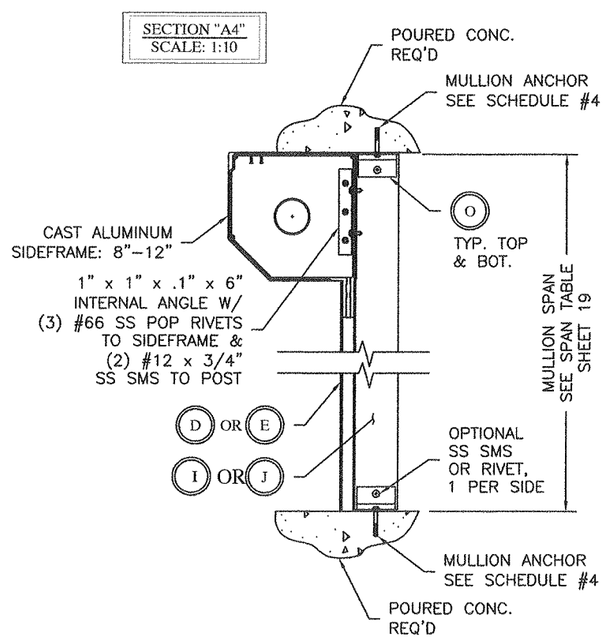

MULLION MOUNT

Donald L. Fowler
Professional Engineer
Texas License No.
102913

8-3-09

REVISION

REV	DESCRIPTION
A	NAME CHANGE 2008
B	
C	
D	
E	

THIRD ANGLE PROJECTION

SECTIONS

Roll-a-way BY QMI
1661 GLENLAKE AVENUE
ITASCA, IL 60143
COPYRIGHT © 2008 QUALITAS MFG. INC.

TITLE: EXTRUDED PVC SLAT (P55)
ROLL-UP SHUTTER
APPROVAL DRAWING

DRAWN: DJN	DATE: 03-01-01		
APPROVED: DLF	DATE: 05-22-09		
EST. AREA:	EST. WT:		
SIZE: B	DRAWING NO: 3-01-100	REV: A	
FSCM NO:	SCALE: 1:10	SHEET 10 OF 20	

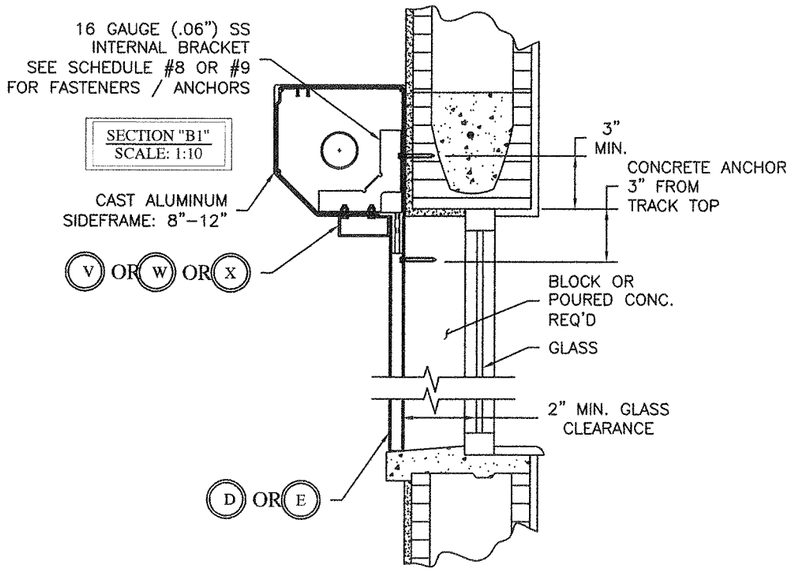

WALL MOUNT
W/ HEADER

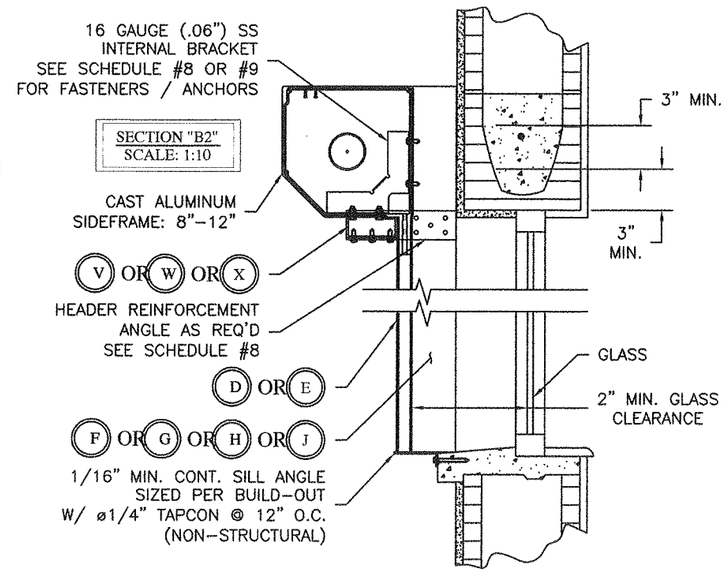

BUILDOUT MOUNT
W/ HEADER

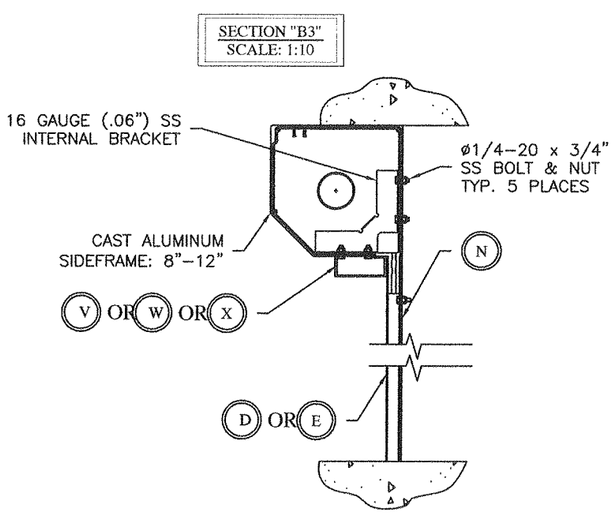

JAMB WALL
W/HEADER

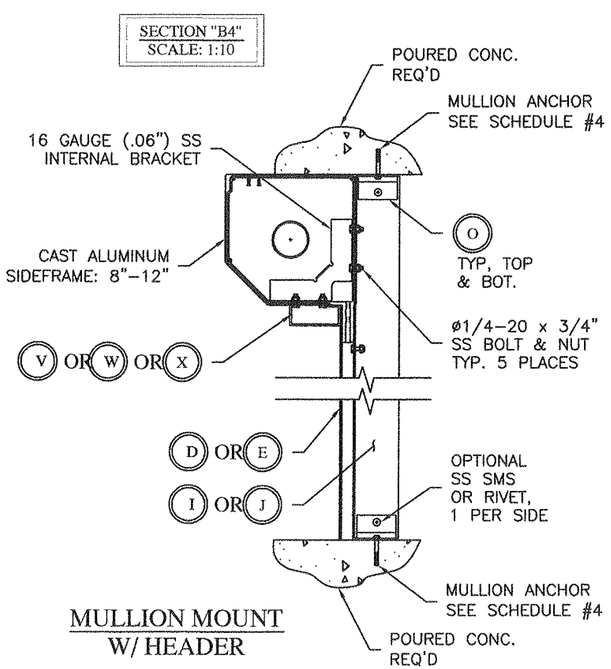

MULLION MOUNT
W/ HEADER

Donald L. Fowler
Professional Engineer
Texas License No.
102913

8-3-09

REVISION	
REV	DESCRIPTION
A	NAME CHANGE 2008
B	
C	
D	
E	

THIRD ANGLE PROJECTION

SECTIONS

Roll-a-way BY OMI

1661 GLENLAKE AVENUE
ITASCA, IL 60143

COPYRIGHT © 2008 QUALITAS MFG. INC.

TITLE: EXTRUDED PVC SLAT (P55)
ROLL-UP SHUTTER
APPROVAL DRAWING

DRAWN: DJN	DATE: 03-01-01		
APPROVED: DLF	DATE: 03-22-09		
EST. AREA:	EST. WT:		
SIZE: B	DRAWING NO: 3-01-100	REV: A	
FSCM NO:	SCALE: 1:10	SHEET 11 OF 20	

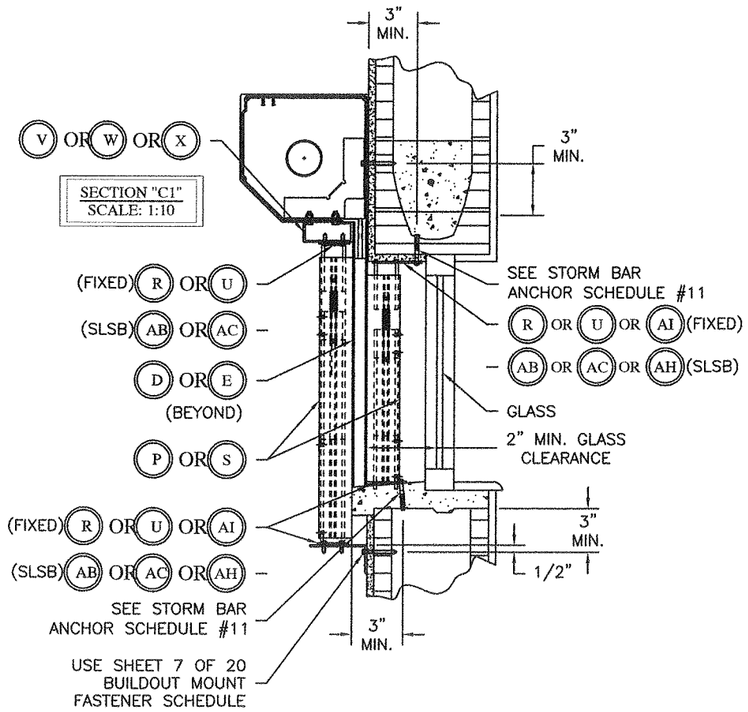

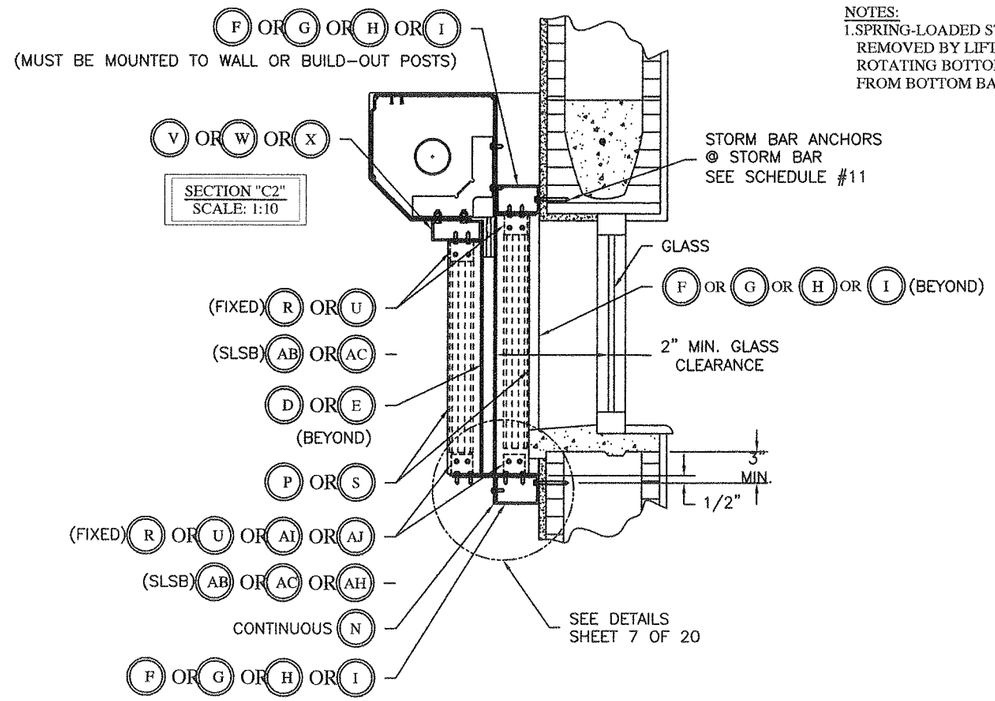

NOTES:
1. SPRING-LOADED STORM BARS MAY BE REMOVED BY LIFTING UP & ROTATING BOTTOM FEET AWAY FROM BOTTOM BASE PLATE

WALL MOUNT
W/ S.L. STORM BAR

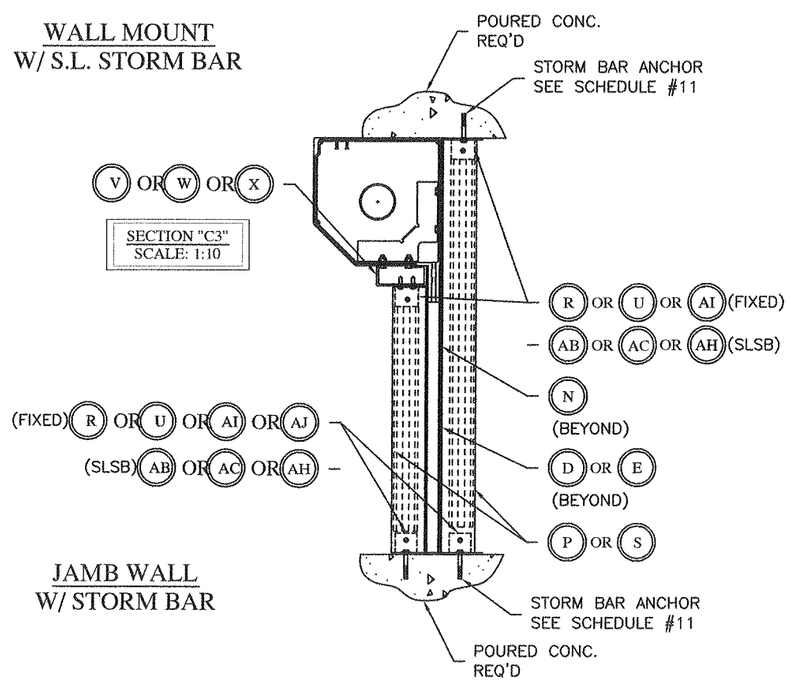

JAMB WALL
W/ STORM BAR

BUILDOUT MOUNT
W/ STORM BAR

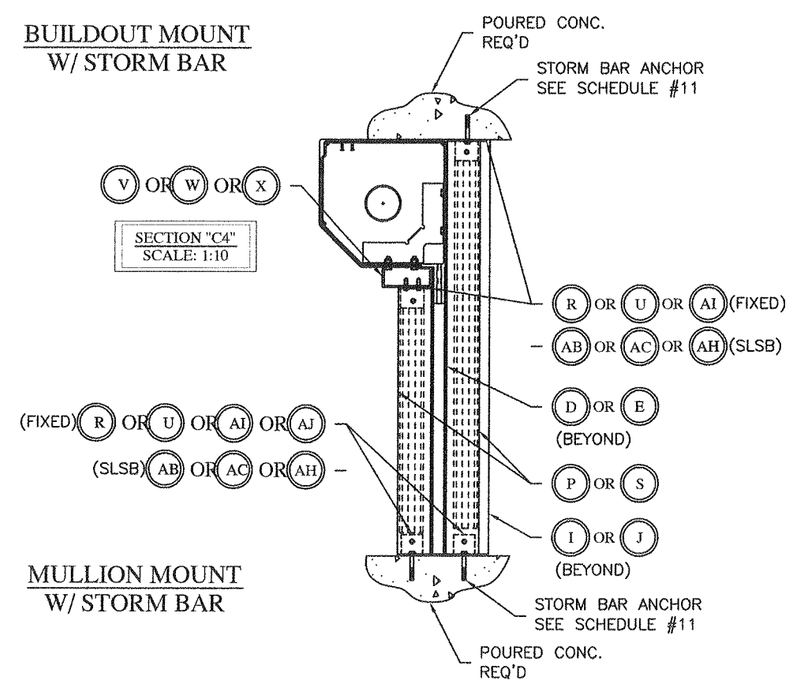

MULLION MOUNT
W/ STORM BAR

Donald L. Fowler
Professional Engineer
Texas License No.
102913

8-3-09

REV	DESCRIPTION
A	FBC 2004 REVISION
B	NAME CHANGE 2008
C	
D	
E	

REVISION

THIRD ANGLE PROJECTION

SECTIONS

Roll-a-way BY QMI
1661 GLENLAKE AVENUE
ITASCA, IL 60143
COPYRIGHT © 2008 QUALITAS MFG. INC.

TITLE: EXTRUDED PVC SLAT (P55) ROLL-UP SHUTTER APPROVAL DRAWING

DRAWN: DJN	DATE: 03-01-01		
APPROVED: DLF	DATE: 03-22-09		
EST. AREA:	EST. WT:		
SIZE: B	DRAWING NO: 3-01-100	REV: B	
FSCM NO:	SCALE: 1:10	SHEET 12 OF 20	

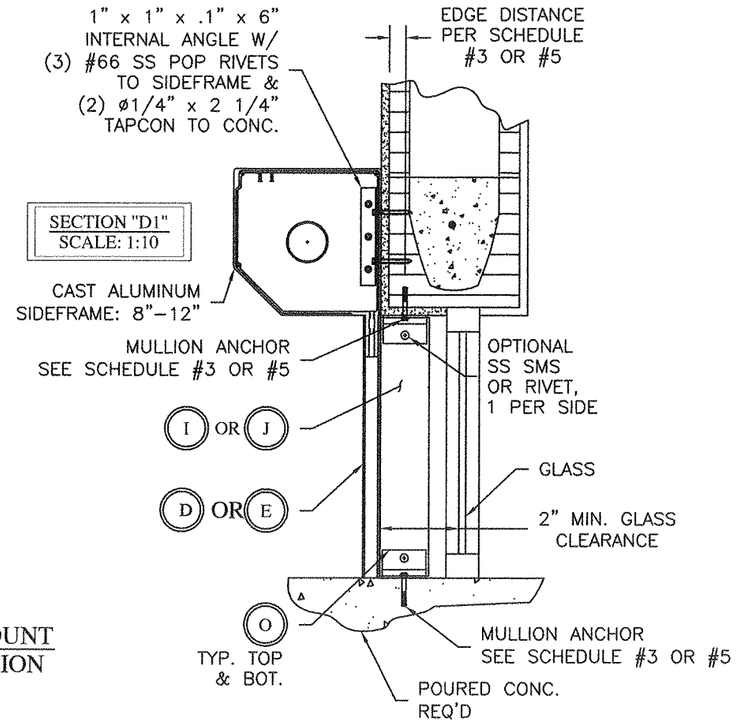

WALL MOUNT
W/ MULLION

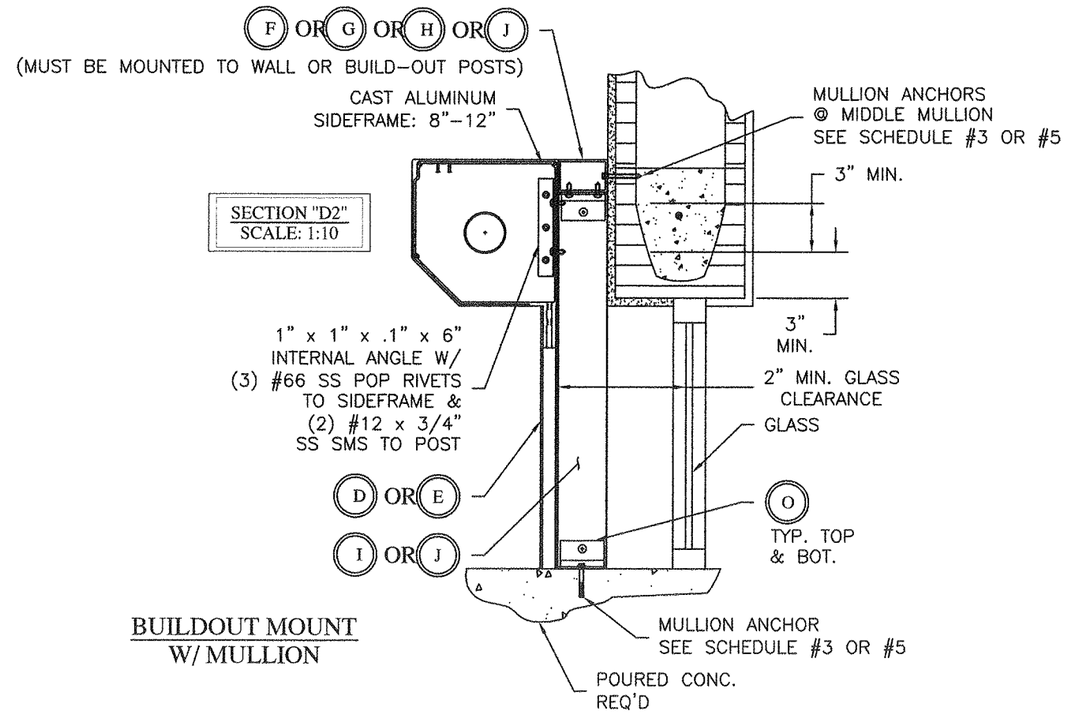

BUILDOUT MOUNT
W/ MULLION

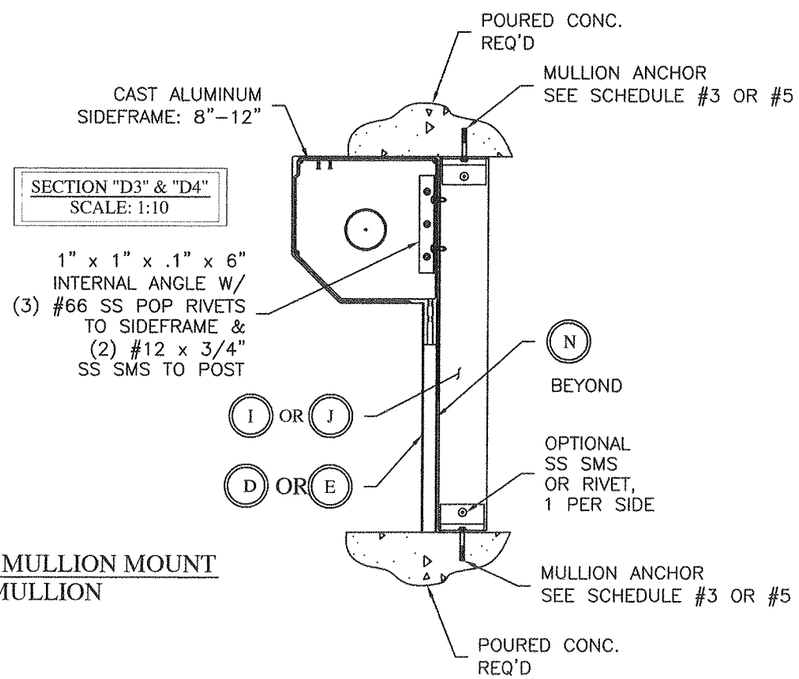

JAMB WALL / MULLION MOUNT
W/ MULLION

Donald L. Fowler
Professional Engineer
Texas License No.
102913

8-3-09

REV	DESCRIPTION
A	FBC 2004 REVISION
B	NAME CHANGE 2008
C	
D	
E	

REVISION

THIRD ANGLE PROJECTION

SECTIONS

Roll-a-way BY QMI

1661 GLEN LAKE AVENUE
ITASCA, IL 60143

COPYRIGHT © 2008 QUALITAS MFG. INC.

TITLE: EXTRUDED PVC SLAT (P55)
ROLL-UP SHUTTER
APPROVAL DRAWING

DRAWN: DJN	DATE: 03-01-01		
APPROVED: DLF	DATE: 05-22-09		
EST. AREA: N/	EST. WT: LB/FT		
SIZE: B	DRAWING NO: 3-01-100	REV: B	
FSCM NO:	SCALE: 1 : 10	SHEET 13 OF 20	

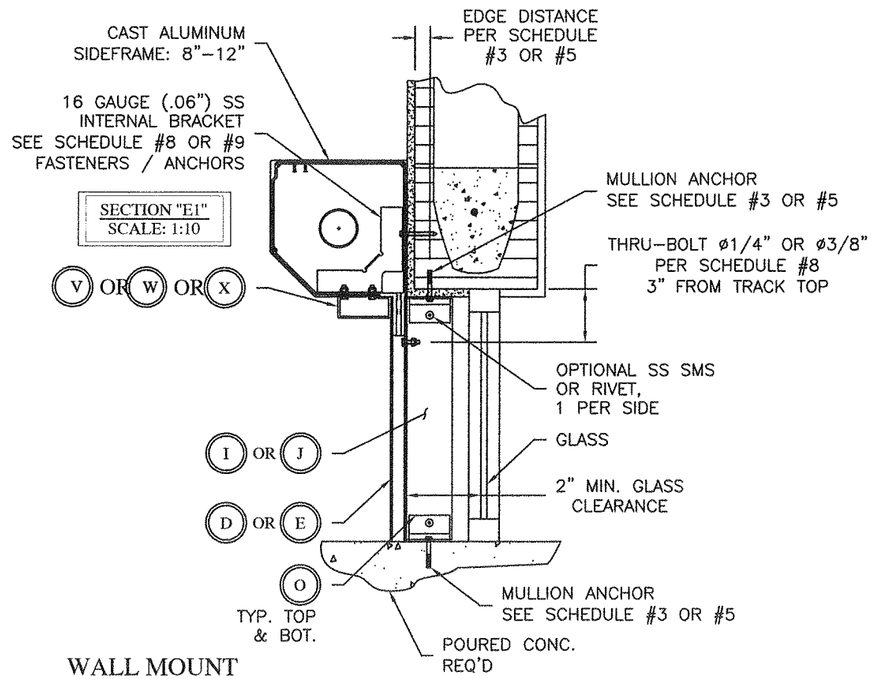

WALL MOUNT
W/ MULLION & HEADER

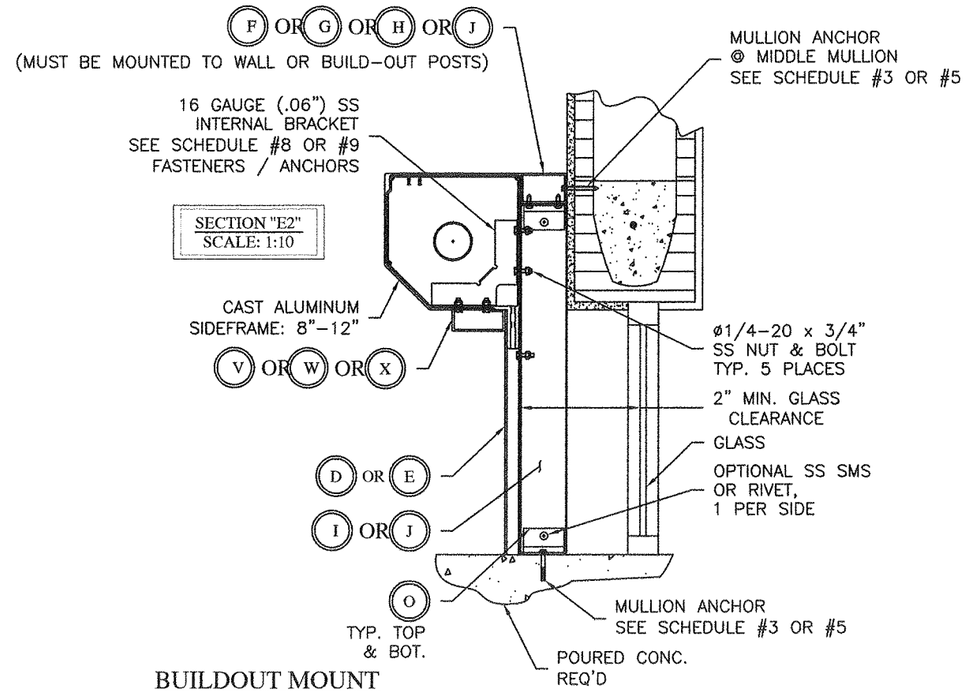

BUILDOUT MOUNT
W/ MULLION & HEADER

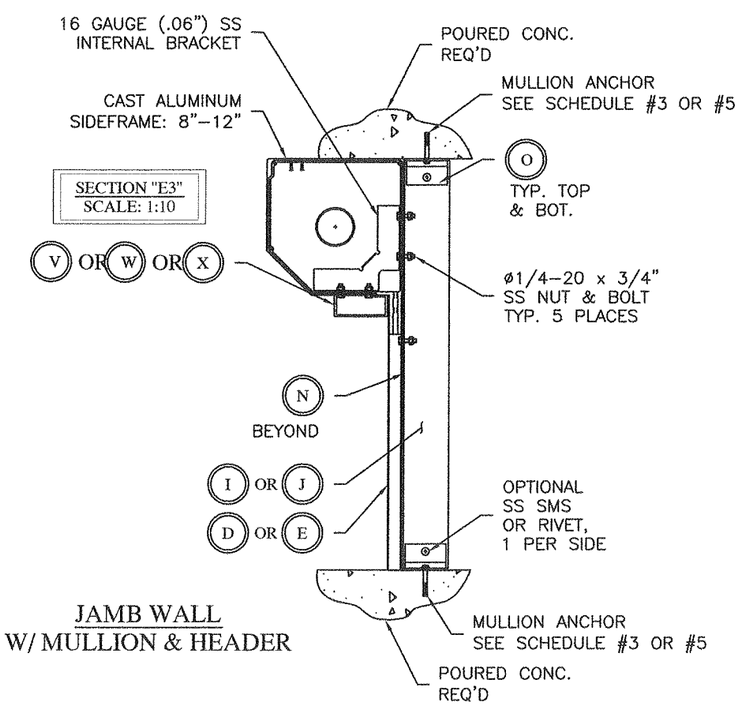

JAMB WALL
W/ MULLION & HEADER

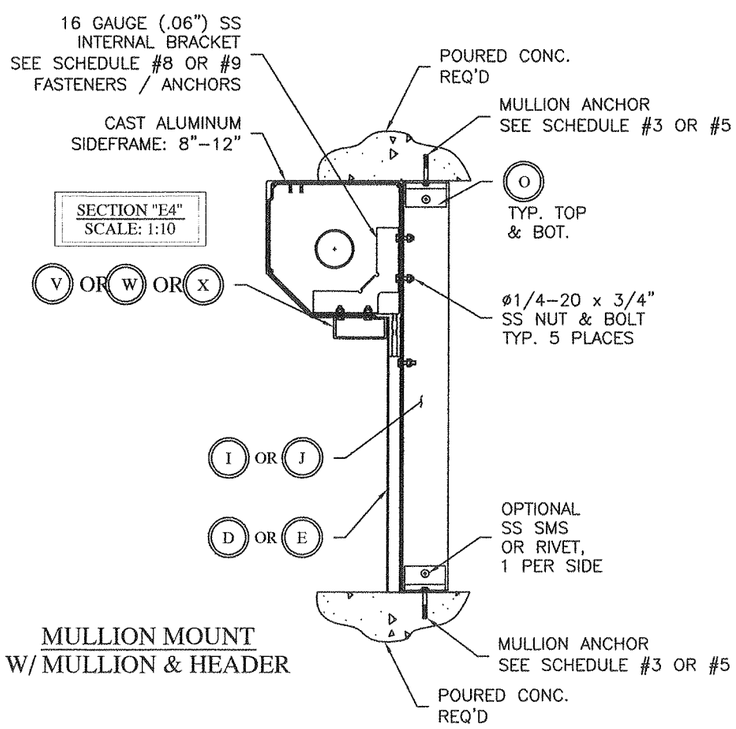

MULLION MOUNT
W/ MULLION & HEADER

Donald L. Fowler
Professional Engineer
Texas License No.
102913

8-3-09

REVISION	
REV	DESCRIPTION
A	FBC 2004 REVISION
B	NAME CHANGE 2006
C	
D	
E	

THIRD ANGLE PROJECTION

SECTIONS

1661 GLENLAKE AVENUE
ITASCA, IL 60143

COPYRIGHT © 2008 QUALITAS MFG. INC.

TITLE: EXTRUDED PVC SLAT (P55)
ROLL-UP SHUTTER
APPROVAL DRAWING

DRAWN: DJN	DATE: 03-01-01	REV: B	
APPROVED: DLF	DATE: 05-22-09		
EST. AREA:	EST. WT:		
SIZE: B	DRAWING NO: 3-01-100	SCALE: 1 : 10	SHEET 14 OF 20
FSCM NO:			

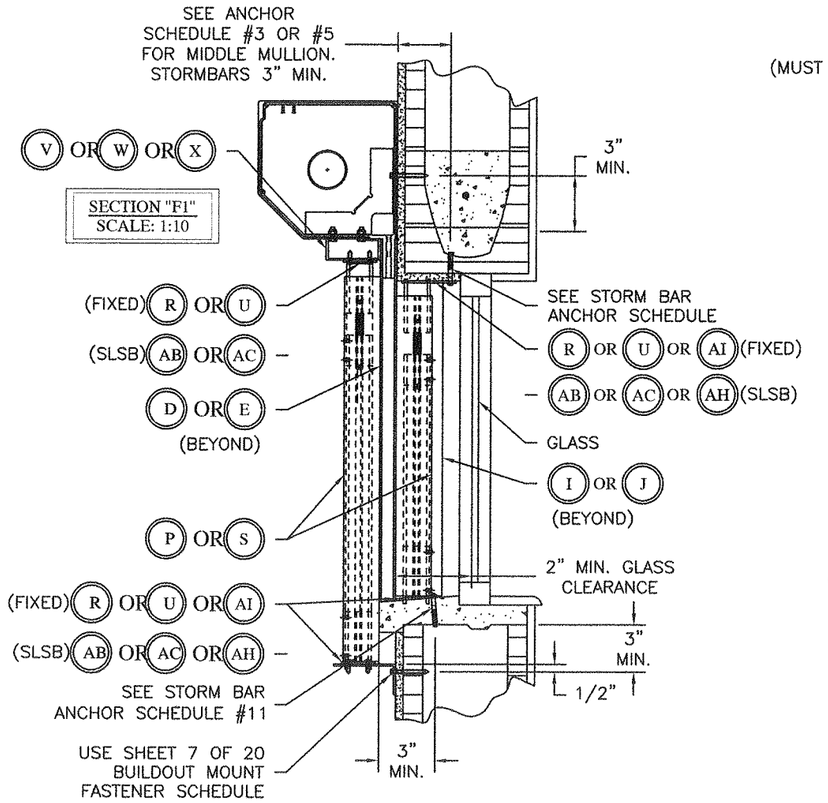

WALL MOUNT
W/ STORM BARS & MIDDLE MULLION

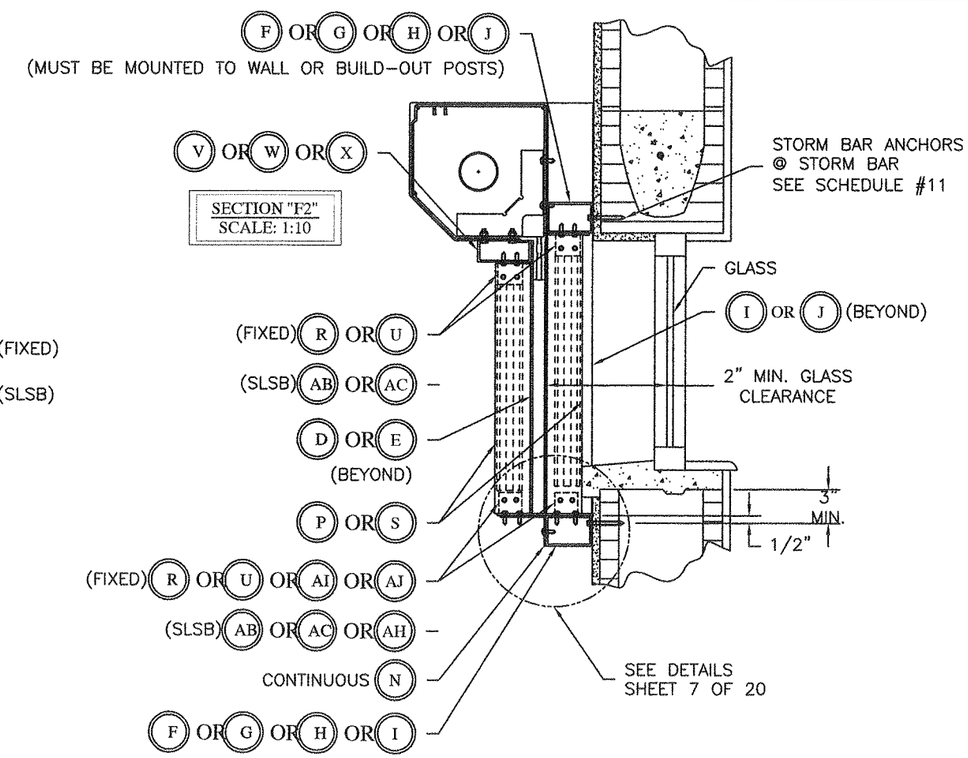

BUILDOUT MOUNT
W/ STORM BARS & MIDDLE MULLION

NOTES:
1. SPRING-LOADED STORM BARS MAY BE REMOVED BY LIFTING UP & ROTATING BOTTOM FEET AWAY FROM BOTTOM BASE PLATE

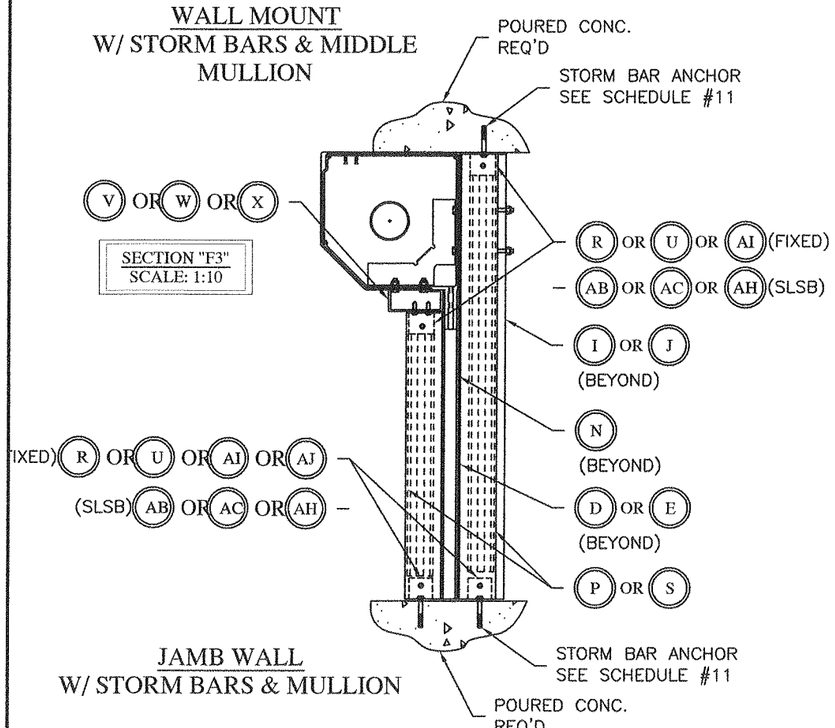

JAMB WALL
W/ STORM BARS & MULLION

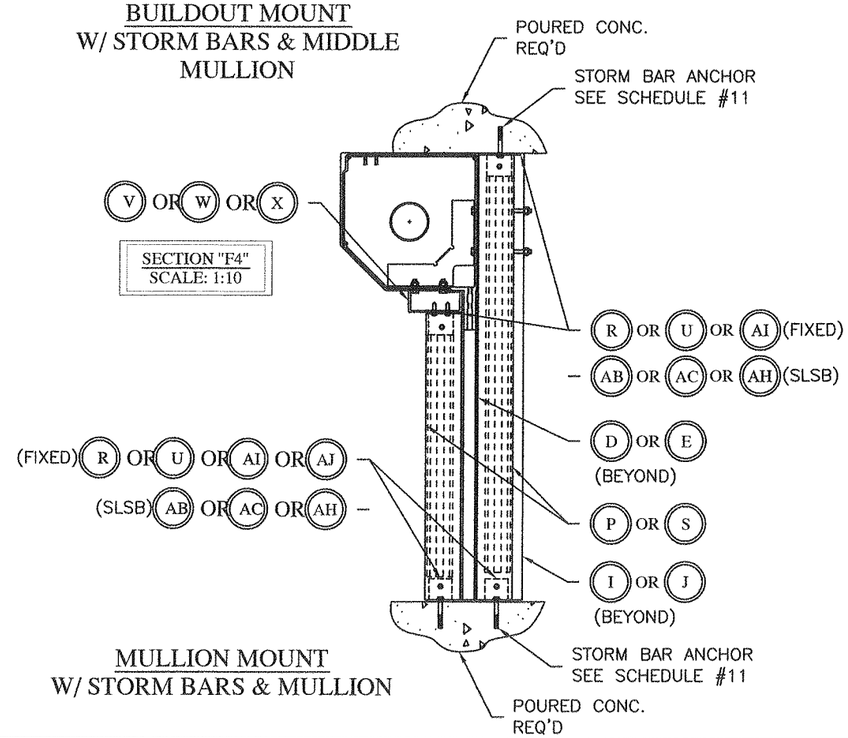

MULLION MOUNT
W/ STORM BARS & MULLION

Donald L. Fowler
Professional Engineer
Texas License No.
102913

8-3-09

REV	DESCRIPTION
A	FBC 2004 REVISION
B	NAME CHANGE 2006
C	
D	
E	

REVISION

THIRD ANGLE PROJECTION

SECTIONS

Roll-a-way BY QMI

1661 GLENLAKE AVENUE
ITASCA, IL 60143

COPYRIGHT © 2008 QUALITAS MFG. INC.

TITLE: EXTRUDED PVC SLAT (P55) ROLL-UP SHUTTER APPROVAL DRAWING

DRAWN: DJN DATE: 03-01-01
APPROVED: DLF DATE: 05-22-09
EST. AREA: EST. WT:
SIZE: B DRAWING NO: 3-01-100 REV: B
FSCM NO: SCALE: 1:10 SHEET 15 OF 20

MAXIMUM SINGLE SPAN SHUTTER SIZE (INCHES)

SCHEDULE #2A
(MAXIMUM SINGLE SPAN SHUTTER CHART)

SPAN & HEIGHT / DESIGN PRESSURE (P.S.F.)	SINGLE FREE SPAN	MAX. SHUTTER HEIGHT
26	42 7/8	252
30.6	40 15/16	252
35.2	39 5/16	252
39.8	37 7/8	252
44.4	36 5/8	252
49	35 1/2	252
53.6	34 1/2	252
58.2	33 9/16	252
62.8	32 11/16	252
67.4	31 7/8	252
72	31 1/8	252
76.6	30 3/8	252
81.2	29 3/4	252
85.8	29 1/16	252
90.4	28 7/16	252
95	27 7/8	252

ONE SPAN

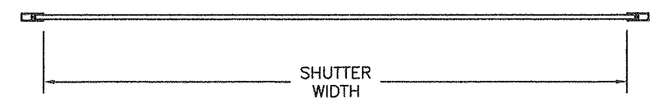

Donald L. Fowler
Professional Engineer
Texas License No.
102913

8-3-09

REVISION

REV	DESCRIPTION
A	NAME CHANGE 2006
B	
C	
D	
E	

THIRD ANGLE PROJECTION

USAGE CHART
SINGLE SPAN

Roll-a-way BY QMI
1661 GLENLAKE AVENUE
ITASCA, IL 60143
COPYRIGHT © 2008 QUALITAS MFG. INC.

TITLE: EXTRUDED PVC SLAT (P55)
ROLL-UP SHUTTER
APPROVAL DRAWING

DRAWN: DJN DATE: 03-01-01
APPROVED: DLF DATE: 05-22-09
EST. AREA: IN² EST. WT: LB/FT²
SIZE: B DRAWING NO: 3-01-100 REV: A
FSCM NO: SCALE: N.T.S.
SHEET 16 OF 20

SCHEDULE # 2B HEADER #1, TWO SPANS

MAXIMUM ALLOWABLE UNIT HEIGHTS, FOR GIVEN PRESSURE & UNIT WIDTH, PER TOTAL SYSTEM DEFLECTION LESS THAN 2"

DESIGN PRESSURE, PSF \ UNIT WIDTH, INCHES	45				60				75				90				105				MAXIMUM UNIT WIDTH
	SB #1	SB #2	SB #3	SB #4	SB #1	SB #2	SB #3	SB #4	SB #1	SB #2	SB #3	SB #4	SB #1	SB #2	SB #3	SB #4	SB #1	SB #2	SB #3	SB #4	
25	138.4	161	194.4	217.6	126.5	147.8	178.4	199.4	112	137.8	166	185.4	101.6	129	155	172.6	93.6	120.6	140.6	140.6	109
30	132.2	153.8	185.8	207.8	115.6	141	170.2	190.2	102.2	131.2	158.2	176.6	92.8	122.8	147.2	161.6	85.4 *	114 *	117 *	117 *	99.6
35	126	147.8	178.6	199.8	107	135.6	163.6	182.8	94.6	126	151.8	169.4	85.8	117.6	138.4	138.4	78.9 *	100 *	100 *	100 *	92.2
40	117.8	143	172.6	193.2	100.2	131	158	176.6	88.6	121.6	146.4	163.4	80.2 *	111 *	121 *	121 *	-	-	-	-	86.3
45	111	138.8	167.6	187.6	94.4	127	153.4	171.4	83.6	116.4	141.8	157.8	75.6 *	105 *	107 *	107 *	-	-	-	-	81.4
50	105.4	135.2	163.2	182.6	89.6	123.6	149.2	166.6	79.2	110.4	137.8	142	71.7 *	97 *	96.9 *	96.9 *	-	-	-	-	77.2
55	100.4	132	159.4	178.2	85.4	119	145.6	162.6	75.6 *	105 *	129 *	129 *	-	-	-	-	-	-	-	-	73.6
60	96.2	129	155.8	174.4	81.8	114	142.2	159	72.4*	100 *	118 *	118 *	-	-	-	-	-	-	-	-	70.5
65	92.4	126.4	152.8	170.8	78.6	109.4	137	155.6	69.4 *	96.7 *	109 *	109 *	-	-	-	-	-	-	-	-	67.7
70	89	124	149.8	167.6	75.6	105.4	132	152.6	67 *	93.2 *	101 *	101 *	-	-	-	-	-	-	-	-	65.2
75	86	119.8	147.2	164.8	73.2	101.8	127.6	149.8	64.6 *	90.2 *	94.8 *	94.8 *	-	-	-	-	-	-	-	-	63
80	83.3	116	144.8	162	70.8	98.6	123.4	142.6	62.5 *	87.2 *	88.8 *	88.8 *	-	-	-	-	-	-	-	-	61
85	80.8	112.6	141	159.6	68.6 *	95.6 *	119 *	134 *	-	-	-	-	-	-	-	-	-	-	-	-	59.2
90	78.6	109.4	137	157.2	66.8 *	93 *	116 *	126 *	-	-	-	-	-	-	-	-	-	-	-	-	57.5
95	76.4	106.6	133.4	155	65 *	90.6 *	113 *	120 *	-	-	-	-	-	-	-	-	-	-	-	-	56

SCHEDULE # 2C HEADER #2, TWO SPANS

MAXIMUM ALLOWABLE UNIT HEIGHTS, FOR GIVEN PRESSURE & UNIT WIDTH, PER TOTAL SYSTEM DEFLECTION LESS THAN 2 "

DESIGN PRESSURE, PSF \ UNIT WIDTH, INCHES	45				60				75				90				105				MAXIMUM UNIT WIDTH
	SB #1	SB #2	SB #3	SB #4	SB #1	SB #2	SB #3	SB #4	SB #1	SB #2	SB #3	SB #4	SB #1	SB #2	SB #3	SB #4	SB #1	SB #2	SB #3	SB #4	
25	138.6	161.2	194.8	218	126.5	147.8	179.2	200.6	112	139.2	168.2	188	101.6	132	159.2	178	93.6	125.8	151.4	169.2	109
30	132.4	154	186	208.2	115.6	141	171.2	191.6	102.2	133	160.6	179.6	92.8	125.8	151.8	169.8	85.4 *	119 *	144 *	161 *	99.6
35	126	148.2	179	200.4	107	135.6	164.8	184.2	94.6	127.8	154.4	172.6	85.8	119.6	146	163	78.9 *	110 *	137 *	154 *	92.2
40	117.8	143.2	173.2	193.8	100.2	131	159.2	178.2	88.6	123.4	149.2	166.8	80.2 *	111 *	140 *	157 *	-	-	-	-	86.3
45	111	139	168	188	94.4	127	154.6	173	83.6	116.4	144.8	161.8	75.6 *	105 *	132 *	152 *	-	-	-	-	81.4
50	105.4	135.2	163.8	183.2	89.6	123.6	150.6	168.4	79.2	110.4	138.2	157.4	71.7 *	100 *	125 *	148 *	-	-	-	-	77.2
55	100.4	132	159.8	178.8	85.4	119	147	164.4	75.6 *	105 *	131 *	153 *	-	-	-	-	-	-	-	-	73.6
60	96.2	129	156.4	175	81.8	114	142.5	160.8	72.4*	100 *	126 *	150 *	-	-	-	-	-	-	-	-	70.5
65	92.4	126.4	153.2	171.6	78.6	109.4	137	157.6	69.4 *	96.8 *	121 *	147 *	-	-	-	-	-	-	-	-	67.7
70	89	124	150.2	168.4	75.6	105.4	132	154.6	67 *	93.2 *	116 *	144 *	-	-	-	-	-	-	-	-	65.2
75	86	119.8	147.8	165.4	73.2	101.8	127.6	152	64.6 *	90.2 *	112 *	141 *	-	-	-	-	-	-	-	-	63
80	83.3	116	145.2	162.8	70.8	98.6	123.4	149.4	62.5 *	87.2 *	109 *	139 *	-	-	-	-	-	-	-	-	61
85	80.8	112.6	141	160.4	68.6 *	95.6 *	119 *	147 *	-	-	-	-	-	-	-	-	-	-	-	-	59.2
90	78.6	109.4	137	158	66.8 *	93 *	116 *	145 *	-	-	-	-	-	-	-	-	-	-	-	-	57.5
95	76.4	106.6	133.4	156	65 *	90.6 *	113 *	143 *	-	-	-	-	-	-	-	-	-	-	-	-	56

SCHEDULE # 2D HEADER #3, TWO SPANS

MAXIMUM ALLOWABLE UNIT HEIGHTS, FOR GIVEN PRESSURE & UNIT WIDTH, PER TOTAL SYSTEM DEFLECTION LESS THAN 2"

DESIGN PRESSURE, PSF \ UNIT WIDTH, INCHES	45				60				75				90				105				MAXIMUM UNIT WIDTH
	SB #1	SB #2	SB #3	SB #4	SB #1	SB #2	SB #3	SB #4	SB #1	SB #2	SB #3	SB #4	SB #1	SB #2	SB #3	SB #4	SB #1	SB #2	SB #3	SB #4	
25	138.6	161.2	194.8	218	126.5	148.6	179.6	200.8	112	139.6	168.6	188.6	101.6	132.6	160.2	179.2	93.6	127	153.2	171.4	109
30	132.4	154	186	208.4	115.6	141.7	171.6	192	102.2	133.4	161	180.2	92.8	126.6	153	171	85.4 *	119 *	146 *	163 *	99.6
35	126	148.2	179	200.4	107	136.6	165	184.6	94.6	128.2	155	173.4	85.8	119.6	147	164.6	78.9 *	110 *	137 *	157 *	92.2
40	117.8	143.4	173.2	193.8	100.2	132	159.6	178.6	88.6	123.4	149.8	167.6	80.2 *	111 *	140 *	159 *	-	-	-	-	86.3
45	111	139.2	168	188.2	94.4	128.2	155	173.4	83.6	116.4	145.4	162.6	75.6 *	105 *	132 *	154 *	-	-	-	-	81.4
50	105.4	135.6	163.8	183.4	89.6	124.8	150.8	168.8	79.2	110.4	137	158.4	71.7 *	100 *	125 *	150 *	-	-	-	-	77.2
55	100.4	132.4	160	179	85.4	119	147.4	164.8	75.6 *	105 *	138.2 *	154 *	-	-	-	-	-	-	-	-	73.6
60	96.2	129.4	156.4	175.2	81.8	114	142.6	161.2	72.4*	100 *	131 *	151 *	-	-	-	-	-	-	-	-	70.5
65	92.4	127	153.2	171.6	78.6	109.4	137	158	69.4 *	96.8 *	126 *	148 *	-	-	-	-	-	-	-	-	67.7
70	89	124	150.2	168.6	75.6	105.4	132	155.2	67 *	93.2 *	121 *	145 *	-	-	-	-	-	-	-	-	65.2
75	86	119.8	147.8	165.6	73.2	101.8	127.6	152.4	64.6 *	90.2 *	116 *	143 *	-	-	-	-	-	-	-	-	63
80	83.3	116	145.2	163	70.8	98.6	123.4	150	62.5 *	87.2 *	112 *	139 *	-	-	-	-	-	-	-	-	61
85	80.8	112.6	141	160.6	68.6 *	95.6 *	119 *	147 *	-	-	-	-	-	-	-	-	-	-	-	-	59.2
90	78.6	109.4	137	158.2	66.8 *	93 *	116 *	145 *	-	-	-	-	-	-	-	-	-	-	-	-	57.5
95	76.4	106.6	133.4	156.2	65 *	90.6 *	113 *	143 *	-	-	-	-	-	-	-	-	-	-	-	-	56

* FOR INTERPOLATION ONLY MAXIMUM WIDTH APPLIES

NOTES: "SB" = STORM BAR

USAGE CHARTS TWO SPAN SHUTTERS

(SEE SHEET 19 FOR ALLOWABLE MULLION HEIGHTS)

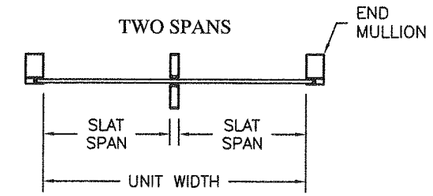

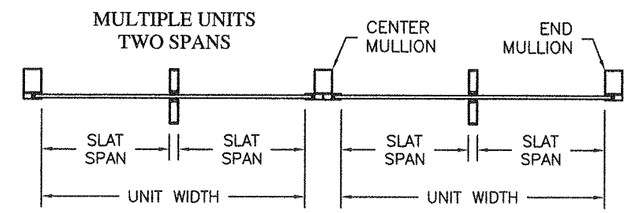

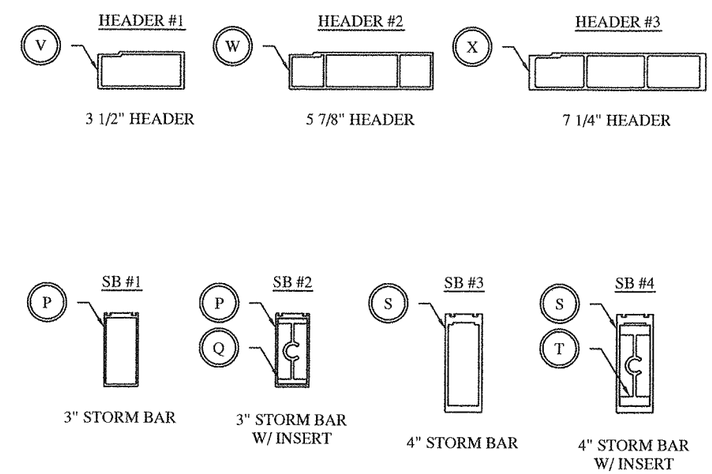

Donald L. Fowler
Professional Engineer
Texas License No.
102913

8-3-09

REV	DESCRIPTION
A	FBC 2004 REVISION
B	
C	
D	
E	

REVISION

THIRD ANGLE PROJECTION

LIMITATIONS DUE TO TOTAL DEFLECTIONS

Roll-a-way BY QMI

1661 GLEN LAKE AVENUE
ITASCA, IL 60143

COPYRIGHT © 2008 QUALITAS MFG. INC.

TITLE: EXTRUDED PVC SLAT (P55) ROLL-UP SHUTTER APPROVAL DRAWING

DRAWN: DJN DATE: 03-01-01

APPROVED: DLF DATE: 05-22-09

EST. AREA: IN² EST. WT: LB/FT

SIZE: B DRAWING NO: 3-01-100 REV: B

FSCM NO:

SCALE: N.T.S.

SHEET 17 OF 20

SCHEDULE # 2E HEADER #1, THREE SPANS

MAXIMUM ALLOWABLE UNIT HEIGHTS, FOR GIVEN PRESSURE & UNIT WIDTH, PER TOTAL SYSTEM DEFLECTION LESS THAN 2"

DESIGN PRESSURE, PSF \ UNIT WIDTH, INCHES	60				75				90				105				120				135				MAXIMUM UNIT WIDTH
	SB #1	SB #2	SB #3	SB #4	SB #1	SB #2	SB #3	SB #4	SB #1	SB #2	SB #3	SB #4	SB #1	SB #2	SB #3	SB #4	SB #1	SB #2	SB #3	SB #4	SB #1	SB #2	SB #3	SB #4	
25	145	168.6	203.6	227.6	135.2	157	189.2	211.2	126.8	146.8	176	196	118.6	136.6	162.8	179.8	109.8	125.6	136.4	136.4	100	107	107	107	152
30	138.6	161	194.2	217.2	129	149.6	180.2	201	120.6	139.4	167.2	185.8	111.4	129.2	149.8	149.8	103.4	113.6	113.6	113.6	89.2	89.2	89.2	89.2	144.7
35	133.2	154.8	186.6	208.6	123.5	143.6	172.8	192.8	112	133.6	159.8	177	103.2	123	128.4	128.4	96.2	97.4	97.4	97.4	76.4	76.4	76.4	76.4	138.4
40	128.6	149.4	180.4	201.4	115.6	138.6	166.6	185.8	104.8	128.4	153.8	154.8	96.6	112.4	112.4	112.4	85.2	85.2	85.2	85.2	66.8 *	66.8 *	66.8 *	66.8 *	133.1
45	123.2	145	174.8	195.4	109	134.2	161.4	179.8	98.8	124.2	137.6	137.6	91	99.8	99.8	99.8	75.8	75.8	75.8	75.8	59.4 *	59.3 *	59.3 *	59.3 *	128.4
50	117	141.2	170.2	190	103.4	130.4	156.6	174.6	93.8	120.2	123.8	123.8	86.4	89.8	89.8	89.8	68.2	68.2	68.2	68.2	53.3 *	53.3 *	53.3 *	53.3 *	124.2
55	111.4	137.6	166	185.4	98.6	127	152.6	165	89.4	112.6	112.6	112.6	81.8	81.8	81.8	81.8	62	62	62	62	-	-	-	-	120.5
60	106.8	134.6	162.2	181.2	94.4	124	149	151.4	85.6	103.2	103.2	103.2	75	75	75	75	56.8 *	56.7 *	56.7 *	56.7 *	-	-	-	-	117.1
65	102.6	131.8	158.8	177.4	90.8	121.4	139.6	139.6	82.2	95.2	95.2	95.2	69.2	69.2	69.2	69.2	52.3 *	52.3 *	52.3 *	52.3 *	-	-	-	-	113.5
70	98.8	129.2	155.8	173.8	87.4	118.8	129.8	129.8	79.2	88.4	88.4	88.4	64.2	64.2	64.2	64.2	48.5 *	48.5 *	48.5 *	48.5 *	-	-	-	-	109.4
75	95.4	127	153	170.8	84.4	116.6	121	121	76.6	82.6	82.6	82.6	60	60	60	60	-	-	-	-	-	-	-	-	105.7
80	92.4	124.8	150.4	167.8	81.8	113.6	113.6	113.6	74.2	77.4	77.4	77.4	56.2 *	56.2 *	56.2 *	56.2 *	-	-	-	-	-	-	-	-	102.3
85	89.6	122.8	148	165	79.4	106.8	106.8	106.8	72	72.8	72.8	72.8	52.7 *	52.7 *	52.7 *	52.7 *	-	-	-	-	-	-	-	-	99.3
90	87.2	121	145.6	162	77.2	100.8	100.8	100.8	68.8	68.8	68.8	68.8	49.9 *	49.9 *	49.9 *	49.9 *	-	-	-	-	-	-	-	-	96.5
95	84.8	118.2	143.5	153.4	75	95.6	95.6	95.6	65.2	65.2	65.2	65.2	47.2 *	47.3 *	47.2 *	47.3 *	-	-	-	-	-	-	-	-	93.9

SCHEDULE # 2F HEADER #2, THREE SPANS

MAXIMUM ALLOWABLE UNIT HEIGHTS, FOR GIVEN PRESSURE & UNIT WIDTH, PER TOTAL SYSTEM DEFLECTION LESS THAN 2"

DESIGN PRESSURE, PSF \ UNIT WIDTH, INCHES	60				75				90				105				120				135				MAXIMUM UNIT WIDTH
	SB #1	SB #2	SB #3	SB #4	SB #1	SB #2	SB #3	SB #4	SB #1	SB #2	SB #3	SB #4	SB #1	SB #2	SB #3	SB #4	SB #1	SB #2	SB #3	SB #4	SB #1	SB #2	SB #3	SB #4	
25	145.8	169.4	204.8	229.2	136.8	159	192	214.6	129.6	150.6	181.6	203	122.2	143.4	172.6	192.6	113.8	136.6	164	182.2	107	130	155.6	172.8	152
30	139.2	161.8	195.6	218.8	130.6	151.8	183.2	205	121	143.6	173.2	193.6	111.4	136.6	164.4	183.4	103.8	130	155.8	173.4	97.6	123.4	147.2	163.2	144.7
35	134	155.8	188.2	210.4	123.6	145.6	176.2	197	112	138	166.4	185.8	103.2	131	157.6	175.8	96.2	124.4	149.2	165.8	90.4	117.8	140.4	155.4	138.4
40	129.4	150.6	182	203.4	115.6	141	170.2	190.4	104.8	133.4	160.6	179.4	96.6	126.4	152	169.4	90	119.8	143.4	159.4	84.6 *	113 *	134 *	139 *	133.1
45	123.2	146.2	176.6	197.6	109	136.8	165.2	184.6	98.8	129.2	155.8	173.8	91	122.4	147.2	164	84.8	115.8	138.6	154	79.7 *	109 *	124 *	124 *	128.4
50	117	142.4	172	192.4	103.4	133.2	160.8	179.6	93.8	125.8	151.4	169	86.4	119	142.8	159.2	80.4	112.2	134.2	142.6	75.5 *	105 *	112 *	112 *	124.2
55	111.4	139	167.8	187.8	98.6	130	156.8	175.4	89.4	122.6	147.6	164.8	82.4	114.8	139.2	154.8	75.8	106.8	129.8	129.8	-	-	-	-	120.5
60	106.8	136	164.2	183.6	94.4	127.2	153.4	171.4	85.6	119.2	144.2	161	78.8	109.8	135.8	151	73.3 *	102 *	118 *	118 *	-	-	-	-	117.1
65	102.6	133.2	160.8	180	90.8	124.6	150.2	167.8	82.2	114.6	141.2	157.4	75.8	105.6	132	144.6	70.5 *	98.4 *	109 *	109 *	-	-	-	-	113.5
70	98.8	130.8	157.8	176.6	87.4	121.8	147.4	164.6	79.2	110.4	138.2	154.4	73	101.6	127.2	134.4	67.9 *	94.8 *	102 *	102 *	-	-	-	-	109.4
75	95.4	128.4	155.2	173.4	84.4	117.6	144.8	161.8	76.6	106.6	133.4	151.4	70.6	98.2	123	125.4	-	-	-	-	-	-	-	-	105.7
80	92.4	126.4	152.6	170.6	81.8	114	142.4	159	74.2	103.2	129.2	148.8	68.2 *	95.2*	117 *	117 *	-	-	-	-	-	-	-	-	102.3
85	89.6	124.4	150.2	168	79.4	110.6	138.4	156.4	72	100.2	125.4	146.4	66.1 *	92.2 *	110 *	110 *	-	-	-	-	-	-	-	-	99.3
90	87.2	121.4	148	165.6	77.2	107.4	134.4	154.2	69.8	97.4	121.8	144	64.3 *	89.6 *	104 *	104 *	-	-	-	-	-	-	-	-	96.5
95	84.8	118.2	146	163.4	75	104.6	130.8	152	68	94.8	118.6	136.4	62.5 *	87.2 *	99 *	99 *	-	-	-	-	-	-	-	-	93.9

SCHEDULE # 2G HEADER #3, THREE SPANS

MAXIMUM ALLOWABLE UNIT HEIGHTS, FOR GIVEN PRESSURE & UNIT WIDTH, PER TOTAL SYSTEM DEFLECTION LESS THAN 2"

DESIGN PRESSURE, PSF \ UNIT WIDTH, INCHES	60				75				90				105				120				135				MAXIMUM UNIT WIDTH
	SB #1	SB #2	SB #3	SB #4	SB #1	SB #2	SB #3	SB #4	SB #1	SB #2	SB #3	SB #4	SB #1	SB #2	SB #3	SB #4	SB #1	SB #2	SB #3	SB #4	SB #1	SB #2	SB #3	SB #4	
25	145.8	169.6	205.2	229.6	137	159.4	192.6	215.6	130.2	151.4	183	204.6	122.2	144.8	174.8	195.4	113.8	139.2	167.8	187.4	107	134	161.2	180	152
30	139.4	162.2	196	219.2	131	152.2	184	205.8	121	144.6	174.6	195.4	111.4	138.2	166.8	186.4	103.8	132.8	160	178.6	97.6	127.6	153.6	171.2	144.7
35	134	156	188.6	211	123.6	146.4	177	198	112	139	168	187.8	103.2	133	160.4	179.2	96.2	127.4	153.6	171.4	90.4	122.4	147.2	164.2	138.4
40	129.6	150.8	182.2	204	115.6	141.6	171.2	191.4	104.8	134.4	162.4	181.4	96.6	128.4	154.8	173	90	123	148.2	165.4	84.6 *	117 *	141 *	158 *	133.1
45	123.2	146.4	177	198	109	137.4	166	185.8	98.8	130.4	157.6	176.2	91	124.6	150.2	167.8	84.8	118.2	143.6	160.2	79.7 *	111 *	137 *	153 *	128.4
50	117	142.6	172.4	192.8	103.4	133.8	161.8	180.8	93.8	127	153.4	171.4	86.4	120.4	146.2	163.2	80.4	112.2	139.6	155.8	75.5 *	105 *	132 *	148 *	124.2
55	111.4	139.2	168.2	188.2	98.6	130.6	157.8	176.6	89.4	124	149.6	167.2	82.4	114.8	142.6	159.2	76.7	106.8	133.8	151.8	-	-	-	-	120.5
60	106.8	136.2	164.6	184.2	94.4	127.8	154.4	172.8	85.6	119.2	146.2	163.6	78.8	109.8	137.4	155.6	73 *	102 *	128 *	148 *	-	-	-	-	117.1
65	102.6	133.6	161.4	180.6	90.8	125.2	151.4	169.2	82.2	114.6	143.4	160.2	75.8	105.6	132	152.4	70.5 *	98.4 *	123 *	145 *	-	-	-	-	113.5
70	98.8	131	158.4	177.2	87.4	121.8	148.4	166	79.2	110.4	138.2	157.2	73	101.6	127.2	149.4	67.9 *	94.8 *	118 *	142 *	-	-	-	-	109.4
75	95.4	128.8	155.6	174.2	84.4	117.6	146	163.2	76.6	106.6	133.4	154.4	70.6	98.2	123	146.6	-	-	-	-	-	-	-	-	105.7
80	92.4	126.8	153.2	171.4	81.8	114	142.6	160.6	74.2	103.2	129.2	151.8	68.1*	95.2 *	119 *	144 *	-	-	-	-	-	-	-	-	102.3
85	89.6	124.8	150.8	168.8	79.4	110.6	138.4	158	72	100.2	125.4	149.4	66.1*	92.2 *	115 *	141 *	-	-	-	-	-	-	-	-	99.3
90	87.2	121.4	148.6	166.4	77.2	107.4	134.4	155.8	69.8	97.4	121.8	147.2	64.3*	89.6 *	112 *	139 *	-	-	-	-	-	-	-	-	96.5
95	84.8	118.2	146.6	164	75	104.6	130.8	153.6	68	94.8	118.6	145.2	62.5*	87.2 *	109 *	137 *	-	-	-	-	-	-	-	-	93.9

* FOR INTERPOLATION ONLY MAXIMUM WIDTH APPLIES

NOTES: "SB" = STORM BAR

USAGE CHARTS THREE SPAN SHUTTERS

(SEE SHEET 19 FOR ALLOWABLE MULLION HEIGHTS)

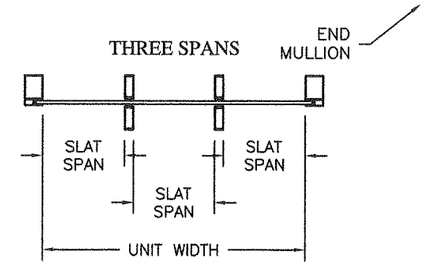

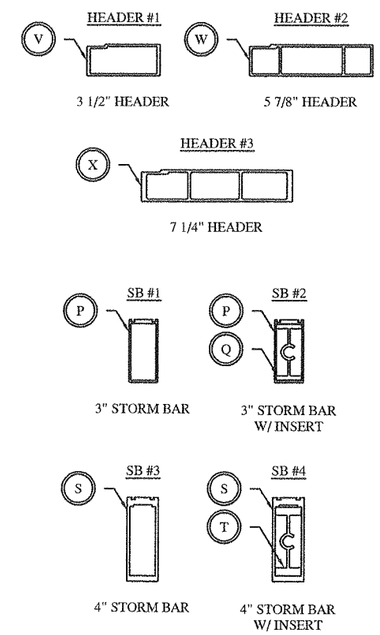

Donald L. Fowler
Professional Engineer
Texas License No.
102913

8-3-09

REV	DESCRIPTION
A	FBC 2004 REVISION
B	NAME CHANGE 2008
C	
D	
E	

REVISION

THIRD ANGLE PROJECTION

LIMITATIONS DUE TO TOTAL DEFLECTIONS

Roll-a-way BY QUALITAS

1661 GLENLAKE AVENUE
ITASCA, IL 60143

COPYRIGHT © 2008 QUALITAS MFG. INC.

TITLE: EXTRUDED PVC SLAT (P55) ROLL-UP SHUTTER APPROVAL DRAWING

DRAWN: DJN DATE: 03-01-01
APPROVED: DLF DATE: 05-22-09
EST. AREA: EST. WT:
SIZE: B DRAWING NO: 3-01-100 REV: B
SCALE: N.T.S.
FSCM NO:
SHEET 18 OF 20

SCHEDULE # 3
3x4 HD & 3x6 HD MIDDLE MULLION PERFORMANCE CHART (MAXIMUM ALLOWABLE PRESSURE, PSF)
ANCHOR TYPES "A", "B, & "C"

SLAT SPAN, INCHES \ MULL HEIGHT, ANCHOR TYPE	60" TYPE "A"	60" TYPE "B" & "C"	72" TYPE "A"	72" TYPE "B" & "C"	84" TYPE "A"	84" TYPE "B" & "C"	96" TYPE "A"	96" TYPE "B" & "C"	108" TYPE "A"	108" TYPE "B" & "C"	120" TYPE "A"	120" TYPE "B" & "C"	132" TYPE "A"	132" TYPE "B"	144" TYPE "A" "B" & "C"	156" TYPE "A" "B" & "C"	168" TYPE "A" "B" & "C"	180" TYPE "A" "B" & "C"
14	95	95	95	95	95	95	95	95	95	95	95	95	95	95	95	82	65	53
16	95	95	95	95	95	95	95	95	95	95	95	95	95	95	91	71	57	47
18	95	95	95	95	95	95	95	95	95	95	95	95	95	95	81	64	51	41
20	95	95	95	95	95	95	95	95	95	95	95	95	94	94	73	57	46	37
22	95	95	95	95	95	95	95	95	95	95	95	95	86	86	66	52	42	34
24	95	95	95	95	95	95	95	95	95	95	93	95	79	79	61	48	38	31
26	95	95	95	95	95	95	95	95	95	95	86	95	73	73	56	44	35	29
28	95	95	95	95	95	95	95	95	89	95	80	90	67	67	52	41	33	27
30	95	95	95	95	95	95	93	95	83	95	75	84	63	63	48	38	31	25
32	95	95	95	95	95	95	87	95	78	95	70	78	59	59	45	36	29	23
34	95	95	95	95	94	95	82	95	73	95	66	74	55	55	43	34	27	22
36	95	95	95	95	89	95	78	95	69	95	62	70	52	52	40	32	25	21
38	95	95	95	95	84	95	74	95	65	91	59	66	50	50	38	30	24	20
40	95	95	93	95	80	95	70	95	62	86	56	63	47	47	36	29	23	19
42	95	95	89	95	76	95	67	95	59	82	53	60	45	45	35	27	22	18
44	95	95	85	95	73	95	64	95	56	78	51	57	43	43	33	26	21	17

SCHEDULE # 4
3x4 HD & 3x6 HD END MULLION PERFORMANCE CHART (MAXIMUM ALLOWABLE PRESSURE, PSF)
ANCHOR TYPES "A", "B", & "C"

SLAT SPAN, INCHES \ MULL HEIGHT, ANCHOR TYPE	72" TYPE "A"	84" TYPE "A"	96" TYPE "A"	108" TYPE "A"	108" TYPE "B"	120" TYPE "A"	132" TYPE "A"	132" TYPE "B"	144" TYPE "A"	144" TYPE "B"	156" TYPE "A" & "B"	168" TYPE "A" & "B"	180" TYPE "A" "B" & "C"
14	95	95	95	95	95	95	95	95	95	95	95	95	95
16	95	95	95	95	95	95	95	95	95	95	95	95	93
18	95	95	95	95	95	95	95	95	95	95	95	89	83
20	95	95	95	95	95	95	95	95	93	95	86	80	74
22	95	95	95	95	95	95	92	95	85	95	78	73	68
24	95	95	95	95	95	93	85	95	78	95	72	67	62
26	95	95	95	95	95	86	78	95	72	95	66	61	57
28	95	95	95	95	89	80	73	95	67	95	61	57	53
30	95	95	93	95	83	75	68	95	62	95	57	53	50
32	95	95	87	95	78	70	64	95	58	91	54	50	47
34	95	94	82	95	73	66	60	95	55	85	51	47	44
36	95	89	78	95	69	62	56	95	52	81	48	44	41
38	95	84	74	95	65	59	54	54	49	76	45	42	39
40	93	80	70	95	62	56	51	51	47	73	43	40	37
42	89	76	67	95	59	53	48	48	44	69	41	38	35
44	85	73	64	95	56	51	46	46	42	66	39	36	34

SCHEDULE # 5
3" x 6" HD MIDDLE MULLION PERFORMANCE CHART
(MAXIMUM ALLOWABLE PRESSURE, PSF)
ANCHOR TYPE "C"

SLAT SPAN, INCHES \ POST HEIGHT, ANCHOR TYPE	96" TYPE "C"	108" TYPE "C"	120" TYPE "C"	132" TYPE "C"	144" TYPE "C"	156" TYPE "C"
14	95	95	95	95	95	95
16	95	95	95	95	95	95
18	95	95	95	95	95	95
20	95	95	95	95	95	95
22	95	95	95	95	95	95
24	95	95	95	95	95	95
26	95	95	95	95	95	95
28	95	95	95	95	95	93
30	95	95	95	95	95	86
32	95	95	95	95	95	81
34	95	95	95	95	95	76
36	95	95	95	95	92	72
38	95	95	95	95	87	68
40	95	95	95	95	82	65
42	95	95	95	95	78	62
44	95	95	95	95	75	59

NOTES: 1. ANCHOR TYPE "A" = ø1/4" ELCO TAPCON, ALLOWABLE SHEAR = 466 POUNDS, 1 1/2" EMBEDMENT, 2 1/2" EDGE DISTANCE MIN.
ANCHOR TYPE "B" = ø5/16" POWER BOLT, ALLOWABLE SHEAR = 820 POUNDS, 2" EMBEDMENT, 3 3/4" EDGE DISTANCE MIN.
ANCHOR TYPE "C" = ø3/8" POWER BOLT, ALLOWABLE SHEAR = 1631 POUNDS, 2" EMBEDMENT, 4 1/2" EDGE DISTANCE MIN.
ALL ALLOWABLES ARE BASED ON TWO ANCHORS PER POST BASE, EXCEPT WHERE MULLIONS ARE INSTALLED TO BUILD-OUT TUBES: A MINIMUM OF (4) #14 SMS SCREWS IS TO BE USED FOR EACH POST BASE CONNECTION FOR BUILD-OUT INSTALLATIONS, USING ANCHOR"B" VALUES FOR ALLOWABLES MULLION SPANS. ALL CONCRETE ANCHOR ALLOWABLES ARE FOR 2000 PSI CONCRETE.
2. "-" INDICATES INADEQUATE ANCHOR CAPACITY FOR SHUTTER HEIGHT, WIDTH, AND PRESSURE.

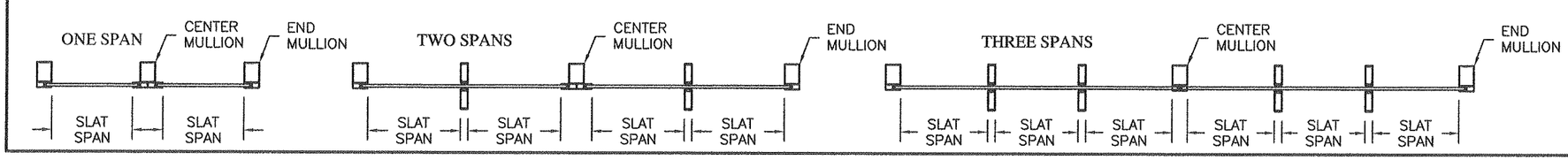

D.L. Fowler
Professional Engineer
Texas License No.
102913
8-3-09

REVISION

REV	DESCRIPTION
A	FBC 2004 REVISION
B	NAME CHANGE 2008
C	
D	
E	

THIRD ANGLE PROJECTION

MULLION PERFORMANCE

Roll-a-way BY QUALI
16661 GLENLAKE AVENUE
ITASCA, IL 60143
COPYRIGHT © 2008 QUALITAS MFG. INC.

TITLE: EXTRUDED PVC SLAT (P55) ROLL-UP SHUTTER APPROVAL DRAWING

DRAWN: DJN DATE: 03-01-01
APPROVED: DLF DATE: 11-11-08
EST. AREA: IN² EST. WT: LB/FT
SIZE: B DRAWING NO: 3-01-100 REV: B
FSCM NO: SCALE: N.T.S.
SHEET 19 OF 20

SCHEDULE # 6
MAXIMUM FASTENER SPACING CHART- Ø1/4 RAWL TAPPER
REDUCED EDGE DISTANCE - WALL-MOUNT TRACK OR BUILD-OUT POST ONLY
3000 PSI CONCRETE ONLY

SLAT SPAN (INCHES) \ EDGE DISTANCE (INCHES), PSF	3", 26 PSF FASTENER SPACING (IN.)	2", 26 PSF FASTENER SPACING (IN.)	1 1/4", 26 PSF FASTENER SPACING (IN.)	3", 60 PSF FASTENER SPACING (IN.)	2", 60 PSF FASTENER SPACING (IN.)	1 1/4", 60 PSF FASTENER SPACING (IN.)	3", 95 PSF FASTENER SPACING (IN.)	2", 95 PSF FASTENER SPACING (IN.)	1 1/4", 95 PSF FASTENER SPACING (IN.)
30	16	16	16	16	12	8	11	7	5
34	16	16	16	15	10	7	9	6	4
38	16	16	16	14	9	7	8	6	4
42	16	16	14	12	8	6	8	5	4
46	16	16	13	11	8	5	7	5	3
50	16	16	12	10	7	5	6	4	3
54	16	15	11	9	6	4	6	4	3
58	16	14	10	9	6	4	5	4	-
62	16	13	9	8	6	4	5	3	-
66	16	13	9	8	5	4	5	3	-
70	16	12	8	7	5	3	4	3	-

NOTE: 1 1/2" MINIMUM EMBEDMENT

SCHEDULE # 7
MAXIMUM FASTENER SPACING CHART- Ø1/4 RAWL TAPPER
REDUCED EDGE DISTANCE - JAMB-MOUNT ANGLE ONLY
3000 PSI CONCRETE ONLY

SLAT SPAN (INCHES) \ EDGE DISTANCE (INCHES), PSF	3", 26 PSF FASTENER SPACING (IN.)	2", 26 PSF FASTENER SPACING (IN.)	1 1/4", 26 PSF FASTENER SPACING (IN.)	3", 60 PSF FASTENER SPACING (IN.)	2", 60 PSF FASTENER SPACING (IN.)	1 1/4", 60 PSF FASTENER SPACING (IN.)	3", 95 PSF FASTENER SPACING (IN.)	2", 95 PSF FASTENER SPACING (IN.)	1 1/4", 95 PSF FASTENER SPACING (IN.)
30	16	16	13	11	7	5	7	5	3
34	16	16	11	10	7	5	6	4	3
38	16	14	10	8	6	4	5	3	-
42	16	13	9	8	5	4	5	3	-
46	16	11	8	7	5	3	4	3	-
50	15	11	7	6	4	3	4	-	-
54	14	10	7	6	4	3	3	-	-
58	13	9	6	5	4	-	3	-	-
62	12	8	6	5	3	-	3	-	-
66	11	8	5	5	3	-	3	-	-
70	11	7	5	4	3	-	3	-	-

NOTE: 1 1/2" MINIMUM EMBEDMENT

SCHEDULE #8
SIDEFRAME INTERNAL ANGLE CONNECTION SCHEDULE
TWO SPAN HEADER LOADING, ALL DESIGN PRESSURES
ANCHOR QTY, (TYPE)

STORM BAR HEIGHT (SBH) \ CONNECTION TYPE	HEADER	WALL MOUNT	BUILD-OUT*	MULLION
SBH ≤ 94	2 (A)	2 (B)	2 (D)	2 (A)
95 ≤ SBH ≤ 158	2 (A)	2 (C)	2 (D)	2 (A)
159 ≤ SBH ≤ 220**	2 (A)	2 (C)	2 (D)	2 (A)

*** EXTERNAL HEADER REINFORCEMENT ANGLE REQ'D FOR ALL SBH > 96".**
*** SECTION B FASTENERS (10) #14 x 3/4" SS SMS**
**** 2000 PSI CONCRETE INSTALL ONLY.**
ANCHOR TYPES:
(A) = Ø1/4" - 20 SS BOLT & NUT (LENGTH VARIES PER CONNECTION TYPE)
(B) = Ø1/4" TAPCON PER GENERAL NOTE 6
(C) = Ø3/8" POWERBOLT PER GENERAL NOTE 6
(D) = #14 SS SMS
(E) = Ø1/2" POWERBOLT PER GENERAL NOTE 6

SCHEDULE #9
SIDEFRAME INTERNAL ANGLE CONNECTION SCHEDULE
THREE SPAN HEADER LOADING, ALL DESIGN PRESSURES
ANCHOR QTY, (TYPE)

STORM BAR HEIGHT (SBH) \ CONNECTION TYPE	HEADER	WALL MOUNT	BUILD-OUT*	JAMB MOUNT ANGLE	MULLION
SBH ≤ 80	2 (A)	2 (C)	2 (D)	2 (A)	2 (A)
81 ≤ SBH ≤ 176**	3 (A)	2 (C)	2 (D)	2 (A)	2 (A)
81 ≤ SBH ≤ 110***	2 (A)	2 (E)	2 (D)	2 (A)	2 (A)

*** EXTERNAL HEADER REINFORCEMENT ANGLE REQ'D FOR ALL STORM BAR HEIGHTS.**
*** SECTION B FASTENERS (10) #14 x 3/4" SS SMS**
**** 2000 PSI CONCRETE INSTALL ONLY.**
***** HOLLOW BLOCK LARGE HEIGHTS AVAILABLE AT LESS THAN 95 PSF.**
ANCHOR TYPES:
(A) = Ø1/4" - 20 SS BOLT & NUT (LENGTH VARIES PER CONNECTION TYPE)
(B) = Ø1/4" TAPCON PER GENERAL NOTE 6
(C) = Ø3/8" POWERBOLT PER GENERAL NOTE 6
(D) = #14 SS SMS
(E) = Ø1/2" POWERBOLT PER GENERAL NOTE 6

SCHEDULE # 11
STORM BAR ANCHOR QUANTITY
3320 PSI MINIMUM CONCRETE MAX 95 PSF

STORM BAR HEIGHT (SBH) \ ANCHOR TYPE	Ø1/4" ELCO TAPCON	Ø3/8" POWER BOLT
SBH ≤ 97	2	2
97 ≤ SBH ≤ 180	4	2
180 ≤ SBH ≤ 280	-	2

NOTE: THE VALUES CONTAINED IN THE ABOVE SCHEDULE ARE BASED ON 1 3/4" MINIMUM EMBEDMENT FOR TAPPER & 2" MINIMUM EMBEDMENT FOR POWER BOLTS.

Donald L. Fowler
Professional Engineer
Texas License No.
102913

8-3-09

REV	DESCRIPTION
A	FBC 2004 REVISION
B	NAME CHANGE 2008
C	
D	
E	

REVISION

THIRD ANGLE PROJECTION

SCHEDULES

Roll-a-way BY QMI
1661 GLENLAKE AVENUE
ITASCA, IL 60143
COPYRIGHT © 2008 QUALITAS MFG. INC.

TITLE: EXTRUDED PVC SLAT (P55) ROLL-UP SHUTTER APPROVAL DRAWING

DRAWN: DJN DATE: 03-01-01
APPROVED: DLF DATE: 03-22-09
EST. AREA: 0' EST. WT: LB/FT
SIZE: B DRAWING NO: 3-01-100 REV: B
FSCM NO: SCALE: N.T.S.
SHEET 20 OF 20