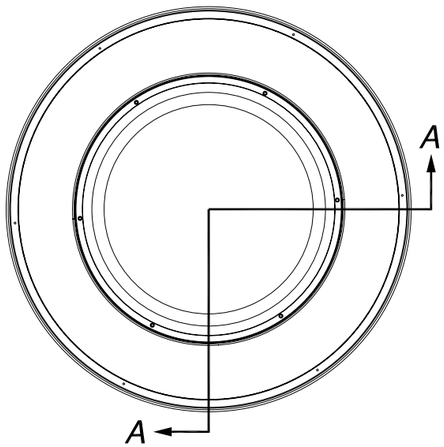

DX36B DOMEX DOWNBLAST ROOF VENT

TOP VIEW

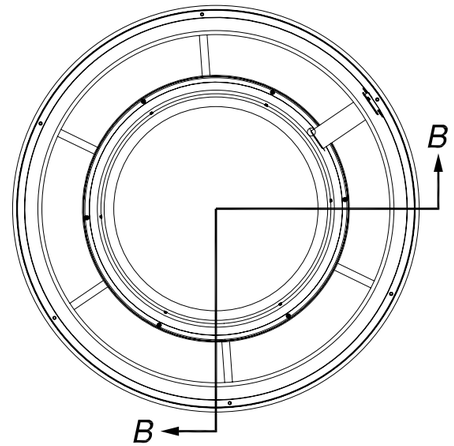

FX36B FUMEX UPBLAST ROOF VENT

TOP VIEW

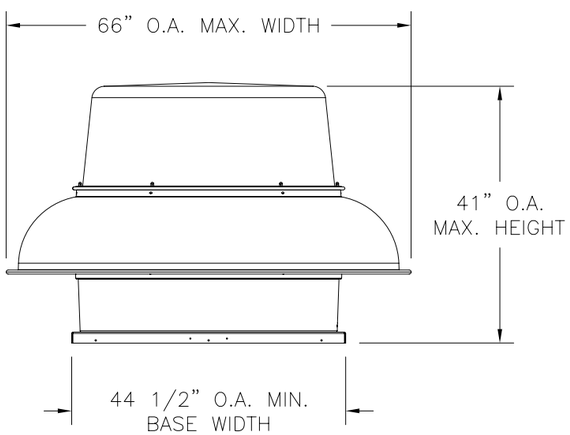

DX36B DOMEX DOWNBLAST ROOF VENT

ELEVATION VIEW

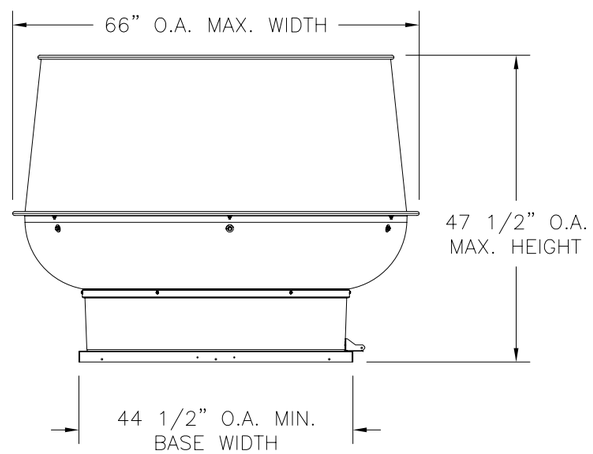

FX36B FUMEX UPBLAST ROOF VENT

ELEVATION VIEW

DESIGN PRESSURE RATING	IMPACT RATING
±70.0 PSF	LARGE AND SMALL MISSILE IMPACT

TABLE OF CONTENTS	
SHEET NO.	DESCRIPTION
1	ELEVATION, TOP VIEWS AND GENERAL NOTES
2	BILL OF MATERIALS AND SECTIONS
3	INSTALLATION DETAILS
4 – 5	COMPONENTS

REVISIONS			
REV	DESCRIPTION	DATE	APPROVED
A	REVISED NOTES AND HARDWARE	4/24/09	RL
B	DP REVISED PER CODE REQUIREMENTS	9/16/09	RL
C	REVISED PER NEW TESTING	09/21/10	RL

NOTES:

1) THE PRODUCT SHOWN HEREIN IS DESIGNED AND MANUFACTURED TO COMPLY WITH REQUIREMENTS OF THE 2006 INTERNATIONAL BUILDING CODE AND 2006 INTERNATIONAL RESIDENTIAL CODE WITH TEXAS STATE MODIFICATIONS.
2) WOOD FRAMING, METAL FRAMING AND MASONRY OPENING TO BE DESIGNED AND ANCHORED TO PROPERLY TRANSFER ALL LOADS TO STRUCTURE. FRAMING AND MASONRY OPENING IS THE RESPONSIBILITY OF THE ARCHITECT OR ENGINEER OF RECORD.
3) CONTRACTOR IS RESPONSIBLE FOR MAINTAINING STRUCTURAL INTEGRITY OF UNIT OPENING AND ALL WOOD FRAMING AROUND UNIT.
4) APPROVED IMPACT PROTECTIVE SYSTEM IS NOT REQUIRED FOR THIS PRODUCT IN WIND–BORNE DEBRIS REGIONS.
5) SHIM AS REQUIRED AT EACH INSTALLATION ANCHOR WITH LOAD BEARING SHIM. SHIM WHERE SPACE OF 1/16" OR GREATER OCCURS. MAXIMUM ALLOWABLE SHIM STACK TO BE 1/4".
6) FOR INSTALLATION INTO WOOD FRAMING OR 2X BUCK USE #12 WOOD SCREW WITH SUFFICIENT LENGTH TO ACHIEVE A 1 1/2" MINIMUM EMBEDMENT INTO SUBSTRATE. LOCATE ANCHORS AS SHOWN IN ELEVATIONS AND INSTALLATION DETAILS.
7) FOR INSTALLATION INTO CONCRETE SLAB USE 3/16" ELCO TAPCON WITH SUFFICIENT LENGTH TO ACHIEVE A 1 1/4" MINIMUM EMBEDMENT INTO SUBSTRATE. LOCATE ANCHORS AS SHOWN IN ELEVATIONS AND INSTALLATION DETAILS.
8) FOR ANCHORING INTO STEEL FRAMING USE #12 TEK SELF TAPPING SCREWS WITH SUFFICIENT LENGTH TO ACHIEVE A MINIMUM EMBEDMENT OF THREE THREADS PAST THE FRAME THICKNESS. LOCATE ANCHORS AS SHOWN IN ELEVATIONS AND INSTALLATION DETAILS.
9) ALL INSTALLATION FASTENERS TO BE CORROSION RESISTANT.
10) INSTALLATION ANCHORS SHALL BE INSTALLED IN ACCORDANCE WITH ANCHOR MANUFACTURER'S INSTALLATION INSTRUCTIONS, AND ANCHORS SHALL NOT BE USED IN SUBSTRATES WITH STRENGTHS LESS THAN THE MINIMUM STRENGTH SPECIFIED BELOW:
    A. WOOD – MINIMUM SPECIFIC GRAVITY OF G=0.42
    B. CONCRETE – MINIMUM COMPRESSIVE STRENGTH OF 3,200 PSI.
    C. MASONRY – STRENGTH CONFORMANCE TO ASTM C–90, GRADE N, TYPE 1 (OR GREATER).
    D. METAL FRAMING – .125" MINIMUM THICKNESS
11) ALLOWABLE STRESS INCREASE OF 1/3 WAS NOT USED IN THE DESIGN OF THE PRODUCT SHOWN HEREIN. WIND LOAD DURATION FACTOR Cd=1.6 WAS USED FOR WOOD ANCHOR CALCULATIONS.
12) VENT HOUSING MATERIAL: 1100–O ALUMINUM.
13) VENT BASE MATERIAL: MINIMUM .042" THK. G–90 GALVANIZED STEEL OR MINIMUM .102" THK. ALUMINUM 3003–H14.
14) GREASE BOX AND EXTERNAL WEATHERPROOF JUNCTION BOX MAY BE ATTACHED TO THIS PRODUCT. GREASE BOX AND EXTERNAL WEATHERPROOF JUNCTION BOX ARE NOT PART OF THIS APPROVAL.
15) THIS APPROVAL IS FOR STRUCTURAL CAPACITY AND IMPACT RATING OF THE EXTERIOR HOUSING ONLY, IT DOES NOT INCLUDE ANY INTERIOR MECHANISM AND/OR ELECTRICAL DEVICE OR CIRCUIT.
16) THESE FANS HAVE NOT BEEN TESTED FOR WATER PENETRATION.

Digitally signed by Luis R. Lomas P.E.
Date: 2010.09.27 13:58:07 -04'00'

PENN BARRY
1401 NORTH PLANO ROAD
RICHARDSON, TX 75081

DX DOMEX DOWNBLAST ROOF VENT
FX FUMEX UPBLAST ROOF VENT
ELEVATION, TOP VIEW AND GENERAL NOTES

DRAWN:	DWG NO.	REV
TJH	08–00623	C
SCALE NTS	DATE 11/20/08	SHEET 1 OF 5

Luis R. Lomas P.E.
Texas No. 101889

PARTS LIST				
NO.	PART NUMBER	DESCRIPTION	MANUFACTURER	MATERIAL
1	16006-1	OPTIONAL BASE	PennBarry	G-90 GALV. STEEL
2	16036-0	VENTURI	PennBarry	ALUMINUM 1100-O
3	16128-0	DISCHARGE APRON	PennBarry	ALUMINUM 1100-O
4	16153-0	WINDBAND	PennBarry	ALUMINUM 1100-O
5	16230-0	HOOD BOTTOM	PennBarry	ALUMINUM 1100-O
6	16205-0	HOOD TOP	PennBarry	ALUMINUM 1100-O
7	16055-0	TOP PLATE	PennBarry	ALUMINUM 1100-O
8	16304-0	MOTOR MOUNTING PLATE	PennBarry	G-90 GALV. CRS
9	16392-0	DRAIN SPOUT	PennBarry	ALUMINUM 1100-H14
10	18380-0	WIRE BRACE CLIP	LEESON	G-90 GALV. CRS
11	21179-0	FAN WHEEL	PennBarry	ALUMINUM, VARIOUS
12	03348-0	SHAFT	OEM CORP	CD 1045 STEEL
13	16405-0	COOLING TUBE	PennBarry	ALUMINUM 6005-T5
14	16280-0	MOTOR SUPPORT ANGLE	PennBarry	G-90 GALV. STEEL
15	63043-0	GROMMET	RUBBERMILL	BLACK SILICONE
16	57091-0	BEARING	POWER RITE	CAST IRON
17	63010-0	VIBRATION ISOLATOR	ELECTROLINE CORP	SANTOPRENE
18	55510-0	1/2-13 SERRATED FLANGE NUT	ILS	ZINC COATED STEEL
19	55601-0	1/2-13 x 1 1/2" HEX SERRATED FLANGE SCREW	ILS	SAE J429 GRADE 2
20	55286-0	COTTER PIN	ILS	ANSI B. 18.8.1
21	18285-0	HORIZONTAL BRACE	PennBarry	G-90 GALV. STEEL
22	16255-0	WIRE SUPPORT	RACINE IRON & WIRE	G-90 GALV. CRS
23		5/16-18 x 2" WELD STUD	ILS	AISI C1010 LOW CS
24	55514-0	5/16-18 x 1 1/2" HEX SERRATED FLANGE SCREW	ILS	SAE J429 GRADE 2
25	55501-0	5/16-18 SERRATED LARGE FLANGE NUT	ILS	SAE J995 GRADE 2
26	55500-0	1/4-20 SERRATED LARGE FLANGE NUT	ILS	SAE J995 GRADE 2
27	55696-0	1/4-20 x 3/4" HEX SERRATED FLANGE SCREW	ILS	SAE J429 GRADE 5
28	55640-0	1/4-20 PEM HIGH STRENGTH STUD	ILS	STEEL
29	55541-0	WASHER 1/8" x 3/8" x 1 3/4"	ILS	ZINC PLATED STEEL
30		ROOF CURB (OPTIONAL)	RPS	G-90 GALV. STEEL
31	16178-0	MOTOR HOOD	PennBarry	ALUMINUM 1100-O
32	55490-0	1/4-20 UNC-2B FLANGED ACORN NUT	ILS	ZINC DIE CAST
33	55940-0	1/4" BODY DIA. POP RIVET		ZINC COATED STEEL
34		ROOF CURB	WARD INDUSTRIES	ALUM 3003-H14
35	16006-0	BASE	PennBarry	ALUM 3003-H14

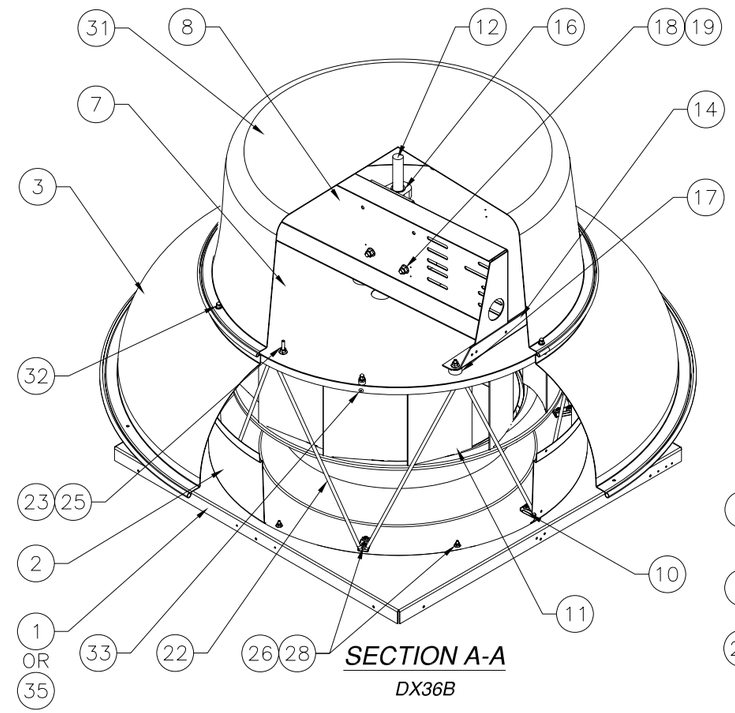

SECTION A-A

DX36B

REVISIONS			
REV	DESCRIPTION	DATE	APPROVED
A	REVISED NOTES AND HARDWARE	4/24/09	RL
B	DP REVISED PER CODE REQUIREMENTS	9/16/09	RL
C	REVISED PER NEW TESTING	09/21/10	RL

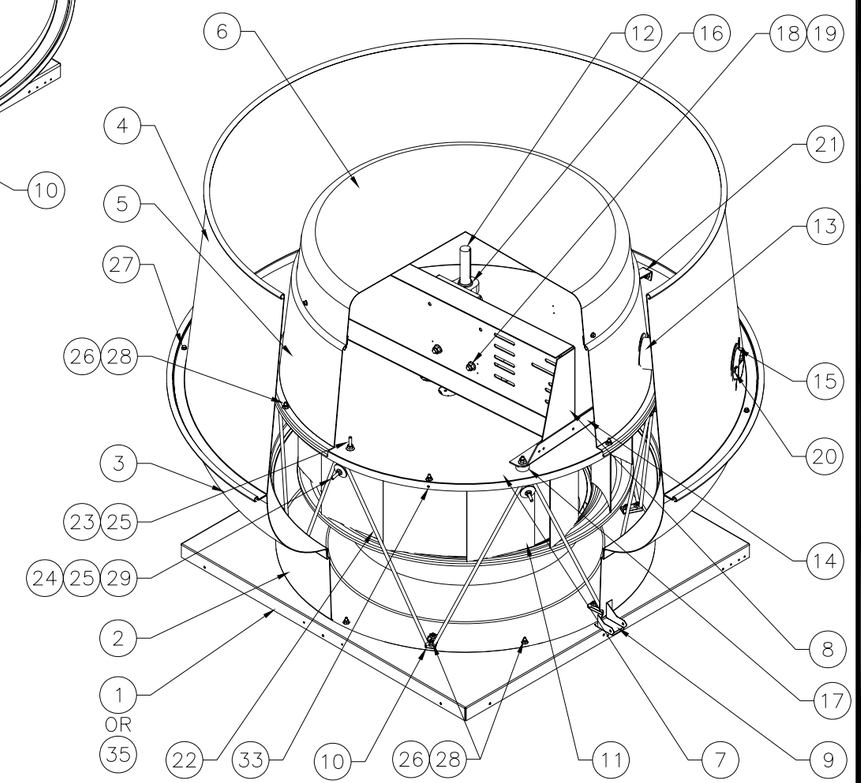

SECTION B-B

FX36B

PENN BARRY
1401 NORTH PLANO ROAD
RICHARDSON, TX 75081

DX DOMEX DOWNBLAST ROOF VENT
FX FUMEX UPBLAST ROOF VENT
BILL OF MATERIALS AND SECTIONS

DRAWN:	DWG NO.	REV
TJH	08-00623	C
SCALE NTS	DATE 11/20/08	SHEET 2 OF 5

STATE OF TEXAS
LUIS R. LOMAS
101889
LICENSED
PROFESSIONAL ENGINEER

Luis R. Lomas P.E.
Texas No. 101889

REVISIONS			
REV	DESCRIPTION	DATE	APPROVED
A	REVISED NOTES AND HARDWARE	4/24/09	RL
B	DP REVISED PER CODE REQUIREMENTS	9/16/09	RL
C	REVISED PER NEW TESTING	09/21/10	RL

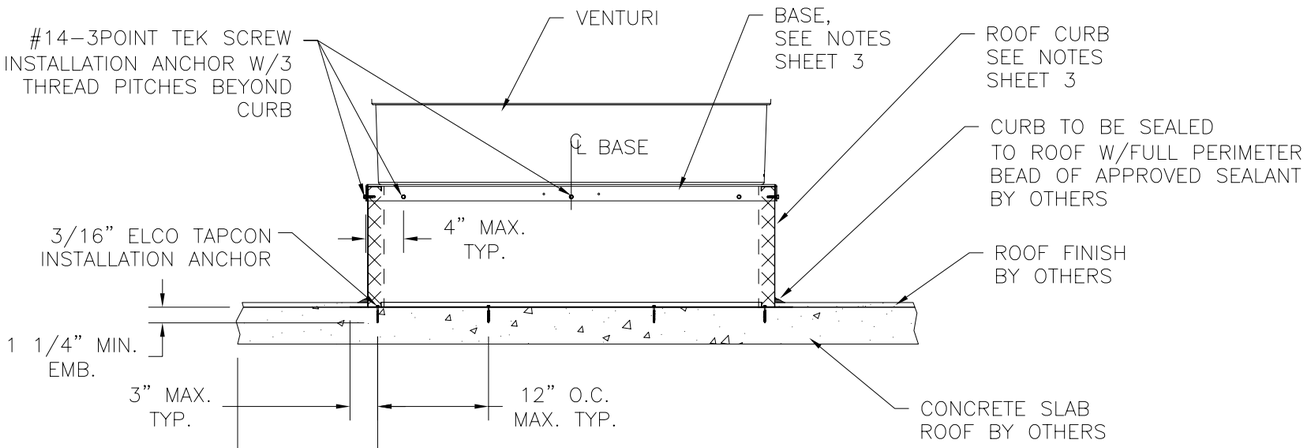

CONCRETE SLAB ROOF

DX36B & FX36B INSTALLATION DETAIL

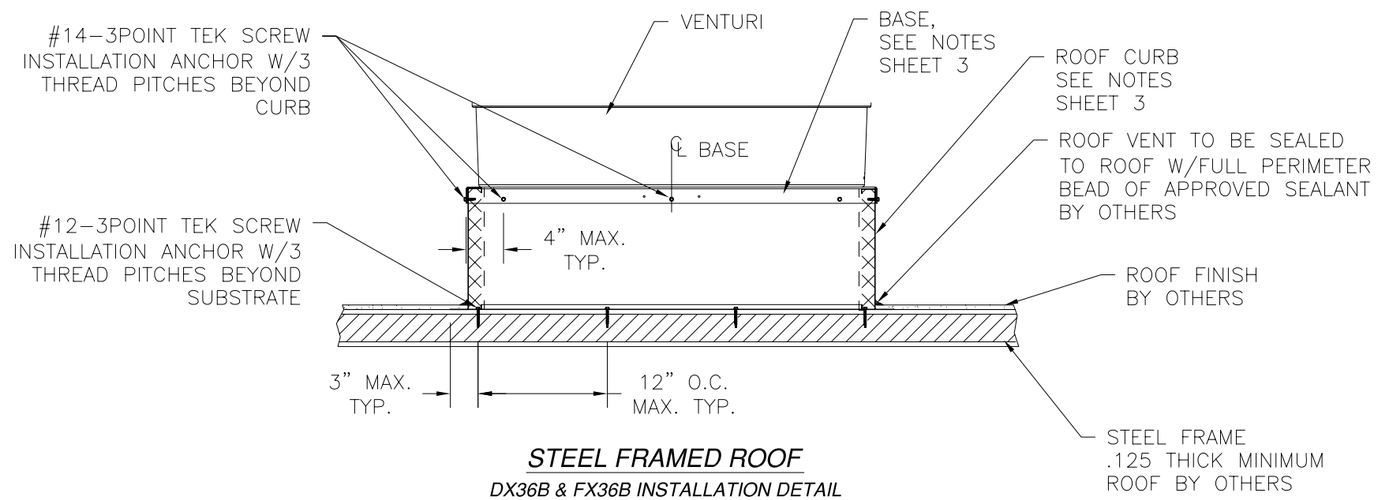

STEEL FRAMED ROOF

DX36B & FX36B INSTALLATION DETAIL

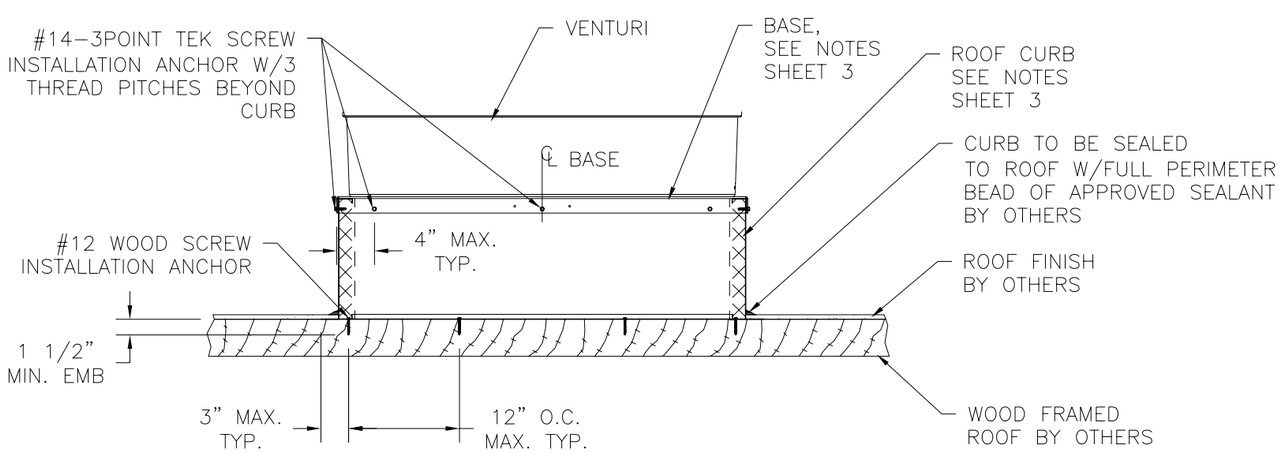

WOOD FRAMED ROOF

DX36B & FX36B INSTALLATION DETAIL

NOTES:
1. ALL FOUR SIDES OF CURB AND BASE ARE ANCHORED IDENTICALLY.
2. ROOF CURB IS INSTALLED TO ROOF FIRST. FAN IS THEN MOUNTED TO CURB USING #14-3POINT TEK SCREWS AS SHOWN ABOVE.
3. SEE SHEET 4, COMPONENTS FOR ROOF CURB CONSTRUCTION.
4. UNITS MAYBE INSTALLED WITH ITEM 34, ALUMINUM 3003-H14 CURB OR ITEM 30 GALVANIZED STEEL CURB.
5. UNITS MAYBE INSTALLED WITH ITEM 35, ALUMINUM 3003-H14 BASE OR ITEM 1, GALVANIZED STEEL BASE.

PENN BARRY
1401 NORTH PLANO ROAD
RICHARDSON, TX 75081

DX DOMEX DOWNBLAST ROOF VENT
FX FUMEX UPBLAST ROOF VENT
INSTALLATION DETAILS

DRAWN:	DWG NO.	REV
TJH	08-00623	C
SCALE NTS	DATE 11/20/08	SHEET 3 OF 5

Luis R. Lomas P.E.
Texas No. 101889

REVISIONS			
REV	DESCRIPTION	DATE	APPROVED
A	REVISED NOTES AND HARDWARE	4/24/09	RL
B	DP REVISED PER CODE REQUIREMENTS	9/16/09	RL
C	REVISED PER NEW TESTING	09/21/10	RL

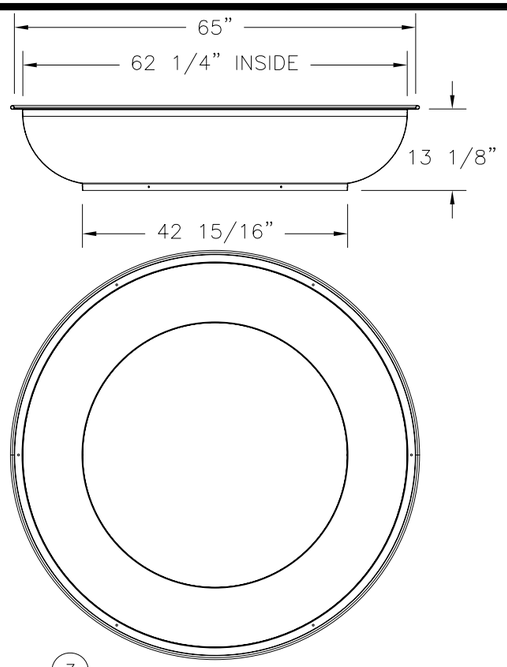

3 DISCHARGE APRON
.080" THK. 1100-O ALUM.

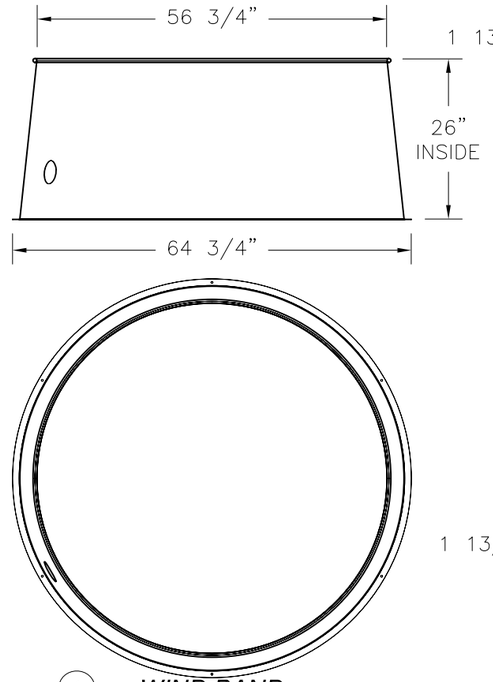

4 WIND BAND
.125" THK. 1100-O ALUM.

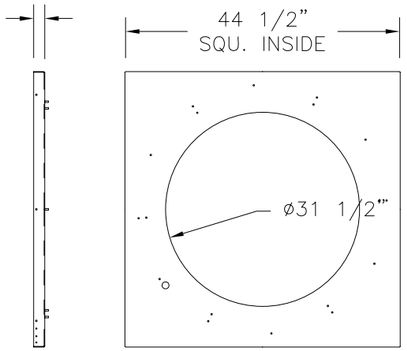

1 OPTIONAL BASE
.1084" THK. G-90 GALV. STEEL
MI VALUE: X = 984.7883
Y = .3713

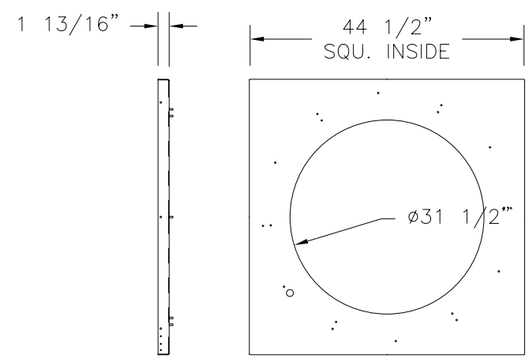

35 BASE
.102" THK. ALUMINUM 3003-H14
MI VALUE: X = 927.2038
Y = .3508

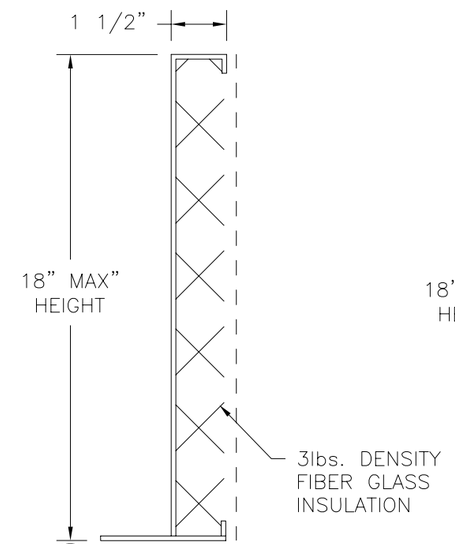

34 ROOF CURB
ALUMINUM 3003-H14 10GA. .125" THICK
MI VALUE: X = 51.1390
Y = .7384

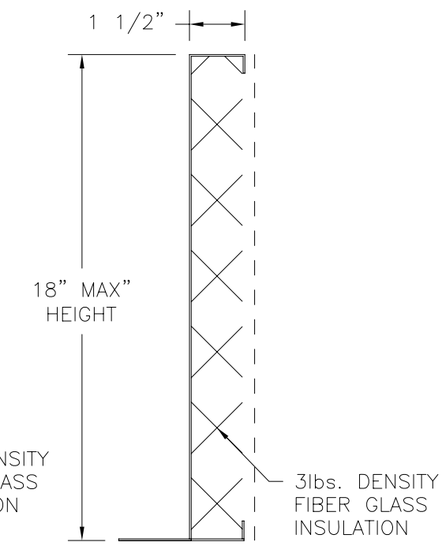

30 OPTIONAL ROOF CURB
18GA. G-90 GALV. STEEL
MI VALUE: X = 20.5405
Y = .3060

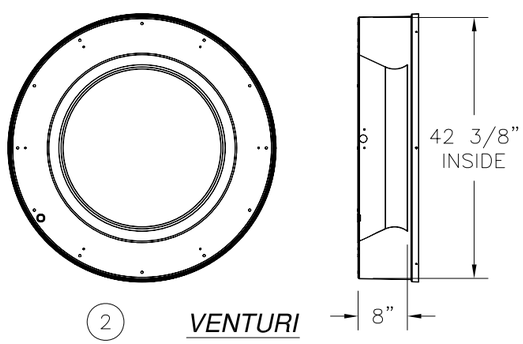

2 VENTURI
.064'"THK. 1100-O ALUM.

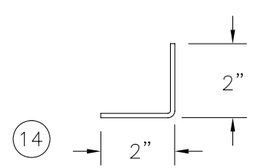

14 MOTOR SUPPORT ANGLE
.138" THK. G-90 GALV. STEEL

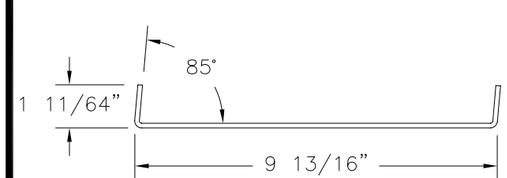

21 HORIZONTAL BRACE
.138" THK. G-90 GALV. STEEL

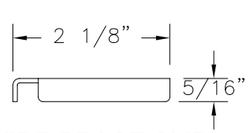

10 WIRE BRACE CLIP
.064" THK. G-90 GALV. STEEL

PENN BARRY
1401 NORTH PLANO ROAD
RICHARDSON, TX 75081

DX DOMEX DOWNBLAST ROOF VENT
FX FUMEX UPBLAST ROOF VENT
COMPONENTS

DRAWN:	DWG NO.	REV
TJH	08-00623	C
SCALE NTS	DATE 11/20/08	SHEET 4 OF 5

Luis R. Lomas P.E.
Texas No. 101889

REVISIONS			
REV	DESCRIPTION	DATE	APPROVED
A	REVISED NOTES AND HARDWARE	4/24/09	RL
B	DP REVISED PER CODE REQUIREMENTS	9/16/09	RL
C	REVISED PER NEW TESTING	09/21/10	RL

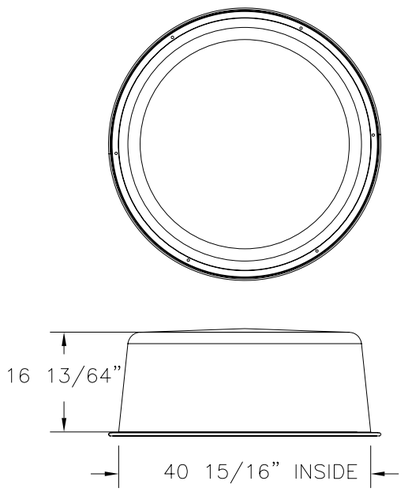

(31) **MOTOR HOOD**
.080" THK. 1100-O ALUM.

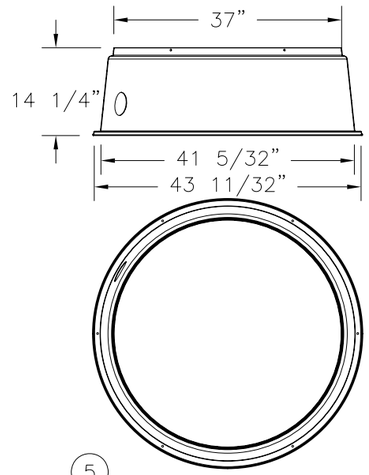

(5) **HOOD BOTTOM**
.080" THK. 1100-O ALUM.

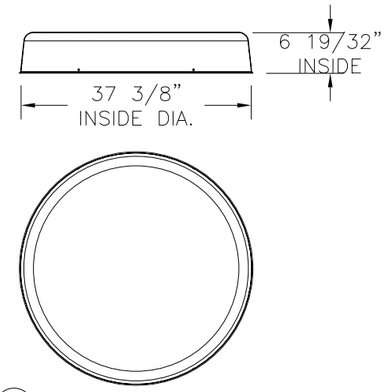

(6) **HOOD TOP**
.064" THK. 1100-O ALUM.

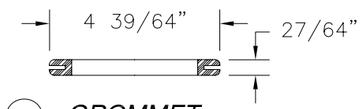

(15) **GROMMET**
BLACK SILICONE

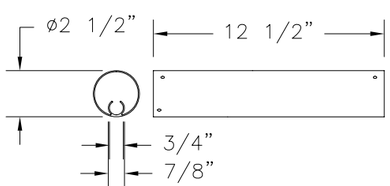

(13) **COOLING TUBE**

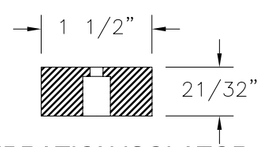

(17) **VIBRATION ISOLATOR**
SANTOPRENE

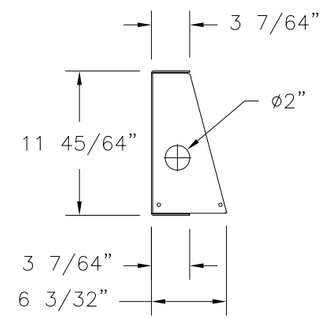

(8) **MOTOR MOUNTING PLATE**
.1084" THK. G-90 GALV. CRS

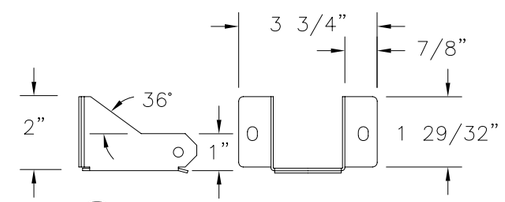

(9) **DRAIN SPOUT**
.064" 1100-H14 ALUM.

PENN BARRY
1401 NORTH PLANO ROAD
RICHARDSON, TX 75081

DX DOMEX DOWNBLAST ROOF VENT
FX FUMEX UPBLAST ROOF VENT
COMPONENTS

DRAWN:	DWG NO.	REV.
TJH	08-00623	C
SCALE NTS	DATE 11/20/08	SHEET 5 OF 5

STATE OF TEXAS
LUIS R. LOMAS
101889
LICENSED
PROFESSIONAL ENGINEER

Luis R. Lomas P.E.
Texas No. 101889