TEX RIB PANEL TYPICAL DETAILS OVER PLYWOOD

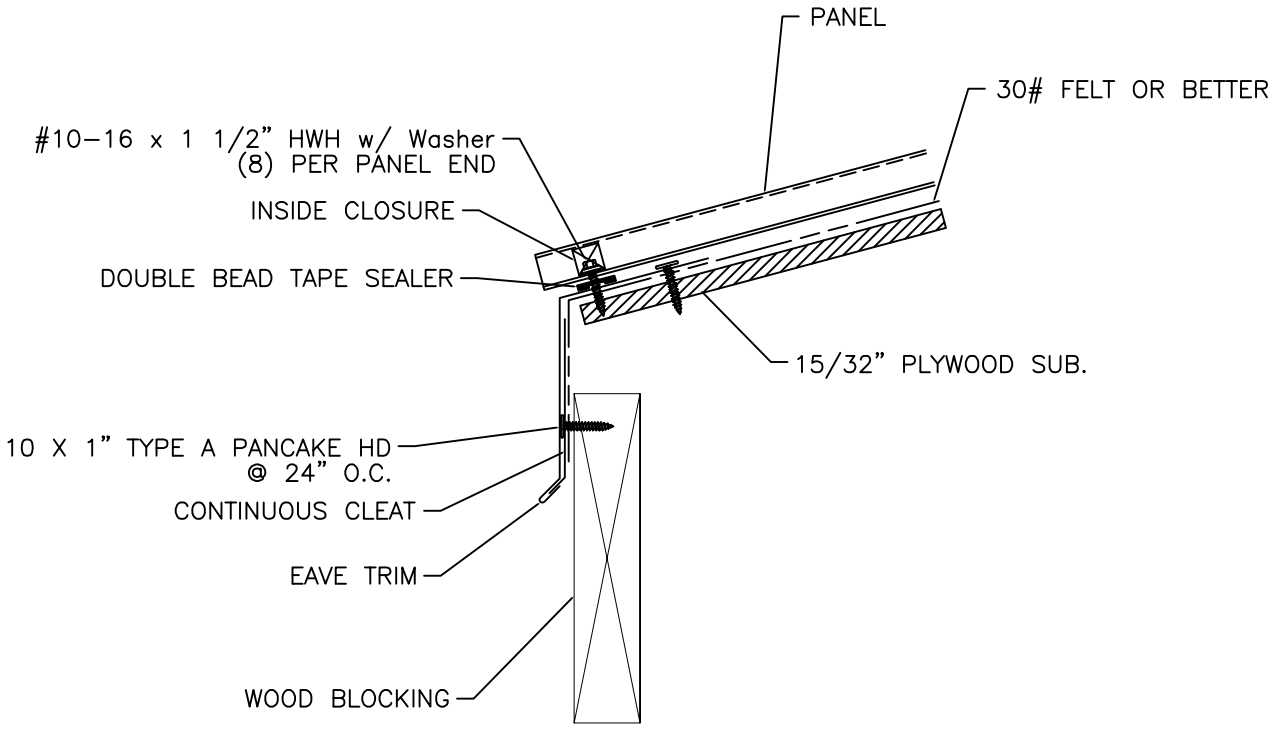

TYPICAL DETAILS
EAVE