SilverLINE
BUILDING PRODUCTS CORP.
1 SILVERLINE DRIVE NORTH BRUNSWICK, NJ 08902 PH. 732.435.1000

SILVERLINE STRUCTURAL BEAM MULLION 2723

GENERAL NOTES:

THE ALUMINUM STRUCTURAL MULLIONS DESCRIBED HEREIN COMPLY WITH THE INTERNATIONAL RESIDENTIAL CODE (IRC) SECTION 613.6, AAMA 101/I.S. 2/NAFS 02 AND AAMA 450 SUBJECT TO THE FOLLOWING CONDITIONS:

1. MULLION ANCHOR EMBEDMENT TO BASE MATERIAL SHALL BE BEYOND WALL DRESSING OR STUCCO.
2. SEPARATE PRODUCT APPROVALS FOR EACH SILVERLINE GLAZING PRODUCT USED WITH THESE MULLIONS MUST BE SUBMITTED ALONG WITH THIS MULLION PRODUCT APPROVAL.
3. ANCHORING OF EACH GLAZING PRODUCT TO THE MULLION SHALL BE AS SHOWN IN EACH INDIVIDUAL GLAZING PRODUCT APPROVAL.
4. ANY CONDITIONS NOT COVERED IN THIS EVALUATION ARE SUBJECT TO SEPARATE ENGINEERING EVALUATION.
5. APPROVED SILVERLINE TWIN UNITS OR APPROVED SILVERLINE SINGLES CAN BE USED IN MULLION CONFIGURATIONS. THE VERTICAL AND HORIZONTAL MULLION CONFIGURATIONS CAN BE COMBINED TO MULL MULTIPLE SINGLE UNITS TOGETHER.
6. THE DESIGN PRESSURE RATING OF THE ASSEMBLY SHALL BE THE LESSER OF THE LOAD CAPACITY OF THE MULLION AS DETERMINED USING THIS APPROVAL OR THE DESIGN PRESSURE RATING OF THE INDIVIDUAL GLAZING PRODUCTS USED.
7. BOUNDING BOX DIMENSIONS FOR GEOMETRIC TRANSOM SHAPES MUST BE EQUAL TO OR LESS THAN THE RECTANGULAR TRANSOM DIMENSIONS SHOWN HEREIN.

SUPPORTING DOCUMENTS & EVIDENCE

1. THIS PRODUCT HAS BEEN ENGINEERED FOLLOWING ACCEPTED ENGINEERING PRACTICE CONFORMING TO THE REQUIREMENTS IN SECTION 613.5 OF THE IRC AND AAMA 450.

TABLE OF CONTENTS

SHEET #	DESCRIPTION
1	TYPICAL ELEVATIONS & GENERAL NOTES
2	MULLION LOAD TABLE FOR TAPCON ANCHORING
3	MULLION LOAD TABLE FOR WOOD SCREW ANCHORING
4	ANCHOR DETAILS AND SECTION DETAILS

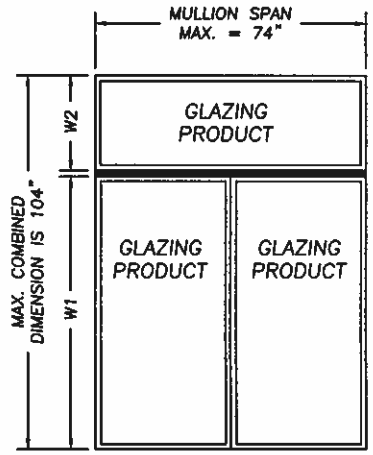

HORIZONTAL MULLION CONFIGURATION

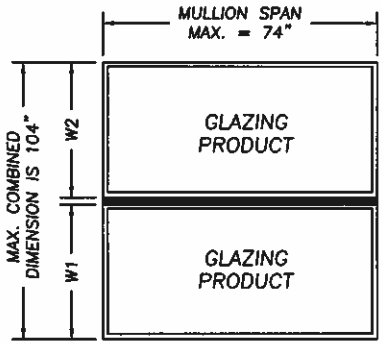

HORIZONTAL MULLION CONFIGURATION

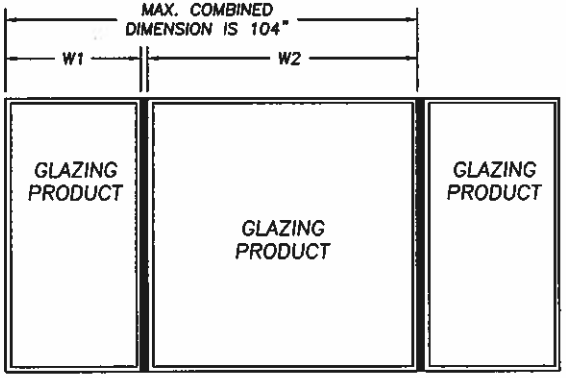

VERTICAL MULLION CONFIGURATION

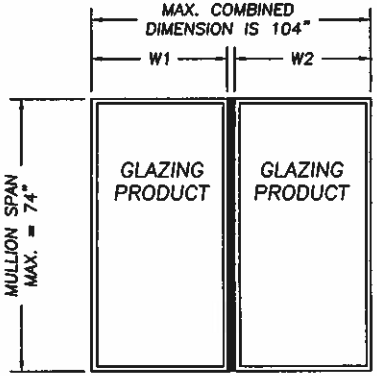

VERTICAL MULLION CONFIGURATION

TYPICAL MULLION CONFIGURATIONS

Documents Prepared By:
RW BUILDING CONSULTANTS, INC.
P.O. Box 230 Valrico FL. 33595
Phone No.: 813.659.9197
Florida Board of Professional Engineers
Certificate Of Authorization No. 9813
Wendell Haney, FL P.E. #54158

PRODUCT: STRUCTURAL BEAM MULLION FOR USE WITH APPROVED SILVERLINE WINDOWS

PART OR ASSEMBLY: TYPICAL ELEVATION AND GENERAL NOTES

NO.	DATE	REVISIONS	BY

DATE: 11/2/04
SCALE: NTS
DWG. BY: RAH
CHK. BY: WWH
DRAWING NO.: TX-360
SHEET 1 OF 4

\\RWBCSRV\RWBC\ACTIVE PROJECTS\PF637\TX-360\TX-360-1.DWG

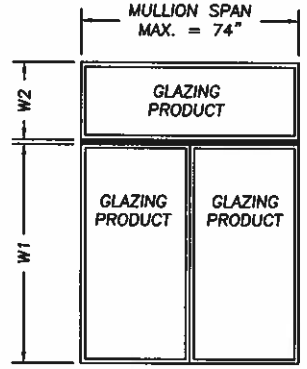

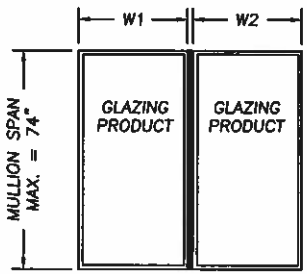

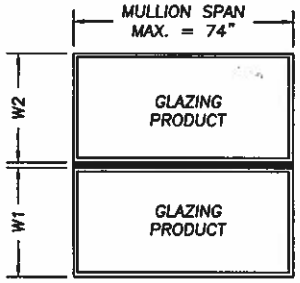

$$\text{TRIBUTARY WIDTH} = \frac{W1 + W2}{2}$$

SILVERLINE 2723 STRUCTRUAL BEAM MULLION LOAD TABLE (PSF)

CONCRETE SCREW ANCHORS	TRIBUTARY WIDTH												
MULLION SPAN	28"	30"	32"	34"	36"	38"	40"	42"	44"	46"	48"	50"	52"
74"	64.38	60.09	56.34	53.02	50.08	47.44	45.07	42.92	40.97	39.19	37.56	36.06	34.67
72"	69.90	65.24	61.16	57.56	54.37	51.51	48.93	46.60	44.48	42.55	40.78	39.14	37.64
70"	76.06	70.99	66.56	62.64	59.16	56.05	53.25	50.71	48.40	46.30	44.37	42.60	40.96
68"	82.98	77.44	72.60	68.33	64.54	61.14	58.08	55.32	52.80	50.51	48.40	46.47	44.68
66"	90.75	84.70	79.41	74.73	70.58	66.87	63.52	60.50	57.75	55.24	52.94	50.82	48.87
64"	99.53	92.89	87.08	81.96	77.41	73.33	69.67	66.35	63.33	60.58	58.06	55.73	53.59
62"	109.47	102.17	95.79	90.15	85.14	80.66	76.63	72.98	69.66	66.63	63.86	61.30	58.95
60"	120.79	112.73	105.69	99.47	93.95	89.00	84.55	80.52	76.86	73.52	70.46	67.64	65.04
58"	129.81	121.16	113.59	106.90	100.97	95.65	90.87	86.54	82.61	79.02	75.72	72.70	69.90
56"	134.45	125.49	117.64	110.72	104.57	99.07	94.11	89.63	85.56	81.84	78.43	75.29	72.40
54"	139.43	130.13	122.00	114.82	108.44	102.74	97.60	92.95	88.73	84.87	81.33	78.08	75.08
52"	144.79	135.14	126.69	119.24	112.62	106.69	101.35	96.53	92.14	88.13	84.46	81.08	77.96
50"	150.58	140.54	131.76	124.01	117.12	110.96	105.41	100.39	95.83	91.66	87.84	84.33	81.08
48"	156.86	146.40	137.25	129.18	122.00	115.58	109.80	104.57	99.82	95.48	91.50	87.84	84.46
46"	163.68	152.77	143.22	134.79	127.30	120.60	114.57	109.12	104.16	99.63	95.48	91.66	88.13
44"	171.12	159.71	149.73	140.92	133.09	126.09	119.78	114.08	108.89	104.16	99.82	95.83	92.14
42"	179.27	167.31	156.86	147.63	139.43	132.09	125.49	119.51	114.08	109.12	104.57	100.39	96.53
40"	188.23	175.68	164.70	155.01	146.40	138.69	131.76	125.49	119.78	114.57	109.80	105.41	101.35
38"	198.14	184.93	173.37	163.17	154.11	145.99	138.69	132.09	126.09	120.60	115.58	110.96	106.69
36"	200.00	195.20	183.00	172.24	162.67	154.11	146.40	139.43	133.09	127.30	122.00	117.12	112.62
34"	200.00	200.00	193.76	182.37	172.24	163.17	155.01	147.63	140.92	134.79	129.18	124.01	119.24
32"	200.00	200.00	200.00	193.76	183.00	173.37	164.70	156.86	149.73	143.22	137.25	131.76	126.69
30"	200.00	200.00	200.00	200.00	195.20	184.93	175.68	167.31	159.71	152.77	146.40	140.54	135.14
28"	200.00	200.00	200.00	200.00	200.00	198.14	188.23	179.27	171.12	163.68	156.86	150.58	144.79
26"	200.00	200.00	200.00	200.00	200.00	200.00	200.00	193.05	184.28	176.27	168.92	162.17	155.93
24"	200.00	200.00	200.00	200.00	200.00	200.00	200.00	200.00	199.64	190.96	183.00	175.68	168.92

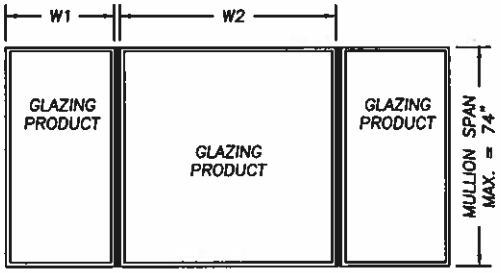

INSTRUCTIONS FOR USE OF THE MULLION LOAD TABLE:

1. *DETERMINE THE DESIGN LOAD REQUIREMENT PER ASCE 7 FOR THE PARTICULAR OPENING.*
2. *FOR THE PARTICULAR OPENING, DETERMINE THE TRIBUTARY WIDTH AND MULLION SPAN. REFERENCE THE SKETCHES ON THIS SHEET FOR MULLION SPAN AND TRIBUTARY WIDTH DETERMINATION.*
3. *IN THE FIRST COLUMN OF THE TABLE, LOCATE THE MULLION SPAN. IN THE FIRST ROW OF THE TABLE, LOCATE THE TRIBUTARY WIDTH. AT THE INTERSECTION OF THE ROW CONTAINING THE MULLION SPAN AND THE COLUMN CONTAINING THE TRIBUTARY WIDTH, READ THE MULLION LOAD RATING GIVEN IN PSF. THE MULLION LOAD RATING MUST BE EQUAL TO OR GREATER THAN THE DESIGN LOAD REQUIREMENT DETERMINED IN STEP 1 ABOVE.*

Documents Prepared By:
RW BUILDING CONSULTANTS, INC.
P.O. Box 230 Valrico FL 33595
Phone No.: 813.659.9197
Florida Board of Professional Engineers
Certificate Of Authorization No. 9813
Wendell Haney, FL P.E. #54158

PRODUCT: STRUCTURAL BEAM MULLION FOR USE WITH APPROVED SILVERLINE WINDOWS

PART OR ASSEMBLY: 2723 MULLION LOAD TABLE, WHEN USING TAPCON ANCHORS

NO.	DATE	BY

REVISIONS

DATE: 11/2/04
SCALE: NTS
DWG. BY: RAH
CHK. BY: WWH
DRAWING NO.: TX-360
SHEET 2 OF 4

\\RWGSRV\RWGC\ACTIVE PROJECTS\#637\TX-360\TX-360-2.DWG

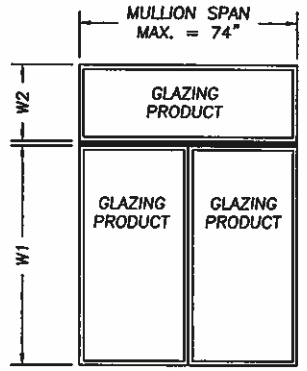

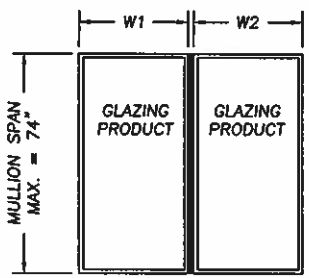

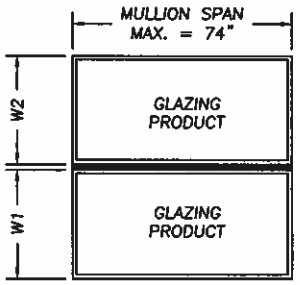

$$\text{TRIBUTARY WIDTH} = \frac{W1 + W2}{2}$$

SILVERLINE 2723 STRUCTRUAL BEAM MULLION LOAD TABLE (PSF)

WOOD SCREW ANCHORS	TRIBUTARY WIDTH												
MULLION SPAN	28"	30"	32"	34"	36"	38"	40"	42"	44"	46"	48"	50"	52"
74"	64.38	60.09	56.34	53.02	50.08	47.44	45.07	42.92	40.97	39.19	37.56	36.06	34.67
72"	69.90	65.24	61.16	57.56	54.37	51.51	48.93	46.60	44.48	42.55	40.78	39.14	37.64
70"	76.06	70.99	66.56	62.64	59.16	56.05	53.25	50.71	48.40	46.30	44.37	42.60	40.96
68"	82.98	77.44	72.60	68.33	64.54	61.14	58.08	55.32	52.80	50.51	48.40	46.47	44.68
66"	90.75	84.70	79.41	74.73	70.58	66.87	63.52	60.50	57.75	55.24	52.94	50.82	48.87
64"	99.53	92.89	87.08	81.96	77.41	73.33	69.67	66.35	63.33	60.58	58.06	55.73	53.59
62"	109.47	102.17	95.79	90.15	85.14	80.66	76.63	72.98	69.66	66.63	63.86	61.30	58.95
60"	120.79	112.73	105.69	99.47	93.95	89.00	84.55	80.52	76.86	73.52	70.46	67.64	65.04
58"	133.72	124.80	117.00	110.12	104.00	98.53	93.60	89.15	85.09	81.39	78.00	74.88	72.00
56"	148.56	138.66	129.99	122.35	115.55	109.47	103.99	99.04	94.54	90.43	86.66	83.20	80.00
54"	165.69	154.64	144.98	136.45	128.87	122.09	115.98	110.46	105.44	100.85	96.65	92.79	89.22
52"	180.94	168.88	158.32	149.01	140.73	133.32	126.66	120.63	115.14	110.14	105.55	101.33	97.43
50"	195.70	182.66	171.24	161.17	152.21	144.20	136.99	130.47	124.54	119.12	114.16	109.59	105.38
48"	200.00	198.19	185.81	174.88	165.16	156.47	148.65	141.57	135.13	129.26	123.87	118.92	114.34
46"	200.00	200.00	199.57	187.83	177.39	168.05	159.65	152.05	145.14	138.83	133.04	127.72	122.81
44"	200.00	200.00	200.00	196.36	185.45	175.69	166.91	158.96	151.74	145.14	139.09	133.53	128.39
42"	200.00	200.00	200.00	200.00	194.29	184.06	174.86	166.53	158.96	152.05	145.71	139.89	134.51
40"	200.00	200.00	200.00	200.00	200.00	193.26	183.60	174.86	166.91	159.65	153.00	146.88	141.23
38"	200.00	200.00	200.00	200.00	200.00	200.00	193.26	184.06	175.69	168.05	161.05	154.61	148.66
36"	200.00	200.00	200.00	200.00	200.00	200.00	200.00	194.29	185.45	177.39	170.00	163.20	156.92
34"	200.00	200.00	200.00	200.00	200.00	200.00	200.00	200.00	196.36	187.83	180.00	172.80	166.15
32"	200.00	200.00	200.00	200.00	200.00	200.00	200.00	200.00	200.00	199.57	191.25	183.60	176.54
30"	200.00	200.00	200.00	200.00	200.00	200.00	200.00	200.00	200.00	200.00	200.00	195.84	188.31
28"	200.00	200.00	200.00	200.00	200.00	200.00	200.00	200.00	200.00	200.00	200.00	200.00	200.00
26"	200.00	200.00	200.00	200.00	200.00	200.00	200.00	200.00	200.00	200.00	200.00	200.00	200.00
24"	200.00	200.00	200.00	200.00	200.00	200.00	200.00	200.00	200.00	200.00	200.00	200.00	200.00

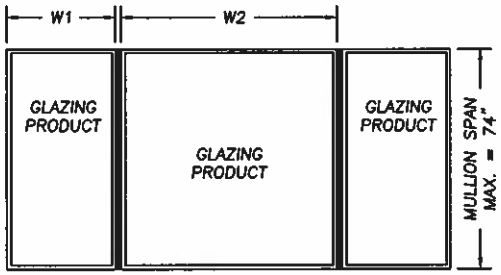

INSTRUCTIONS FOR USE OF THE MULLION LOAD TABLE:

1. *DETERMINE THE DESIGN LOAD REQUIREMENT PER ASCE 7 FOR THE PARTICULAR OPENING.*
2. *FOR THE PARTICULAR OPENING, DETERMINE THE TRIBUTARY WIDTH AND MULLION SPAN. REFERENCE THE SKETCHES ON THIS SHEET FOR MULLION SPAN AND TRIBUTARY WIDTH DETERMINATION.*
3. *IN THE FIRST COLUMN OF THE TABLE, LOCATE THE MULLION SPAN. IN THE FIRST ROW OF THE TABLE, LOCATE THE TRIBUTARY WIDTH. AT THE INTERSECTION OF THE ROW CONTAINING THE MULLION SPAN AND THE COLUMN CONTAINING THE TRIBUTARY WIDTH, READ THE MULLION LOAD RATING GIVEN IN PSF. THE MULLION LOAD RATING MUST BE EQUAL TO OR GREATER THAN THE DESIGN LOAD REQUIREMENT DETERMINED IN STEP 1 ABOVE.*

Documents Prepared By:
RW BUILDING CONSULTANTS, INC.
P.O. Box 230 Valrico FL 33595
Phone No.: 813.659.9197
Florida Board of Professional Engineers
Certificate Of Authorization No. 9813
Wendell Honey, FL P.E. #54158

PRODUCT: STRUCTURAL BEAM MULLION FOR USE WITH APPROVED SILVERLINE WINDOWS

PART OR ASSEMBLY: 2723 MULLION LOAD TABLE, WHEN USING WOOD SCREWS

NO.	DATE	BY

REVISIONS

DATE: 11/2/04
SCALE: NTS
DWG. BY: RAH
CHK. BY: WWH
DRAWING NO.: TX-360
SHEET 3 OF 4

\\RWGCSRV\RWGC\ACTIVE PROJECTS\PF637\TX-360\TX-360-3.DWG

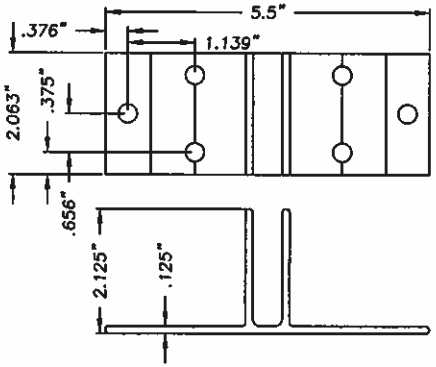

MULLION ANCHOR BRACKET 2722
MAT'S: 6063-T6
FOR #10 WOOD SCREW ANCHORING
(MIN. LATERAL DESIGN VALUE = 170#)

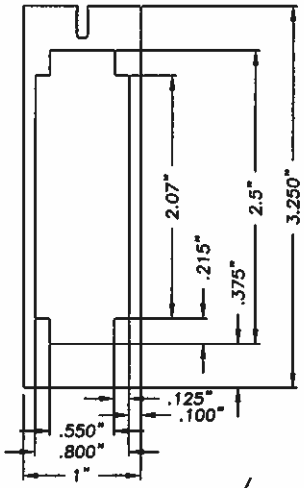

2723 MULLION
MAT'S: 6063-T6

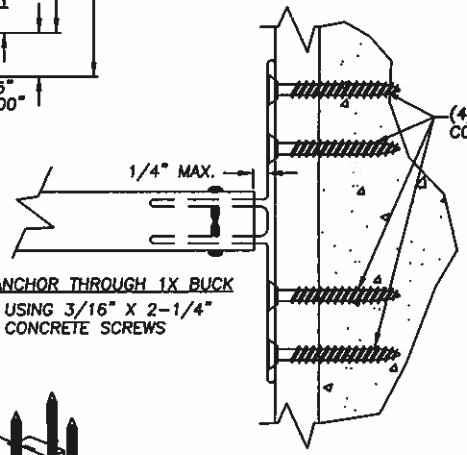

ANCHOR THROUGH 1X BUCK
USING 3/16" X 2-1/4"
CONCRETE SCREWS

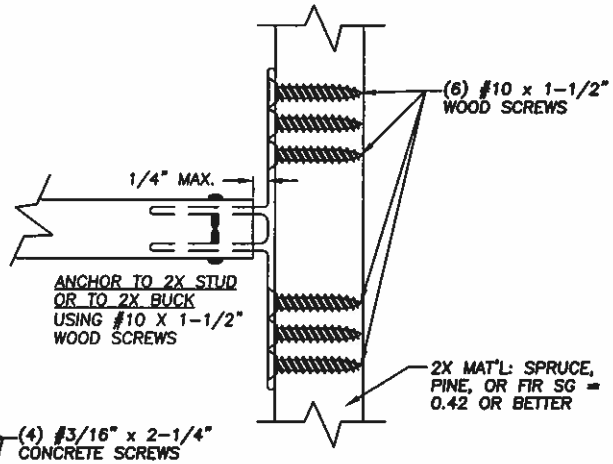

ANCHOR TO 2X STUD
OR TO 2X BUCK
USING #10 X 1-1/2"
WOOD SCREWS

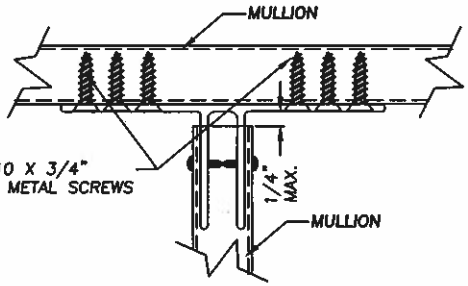

ANCHOR MULLION TO MULLION

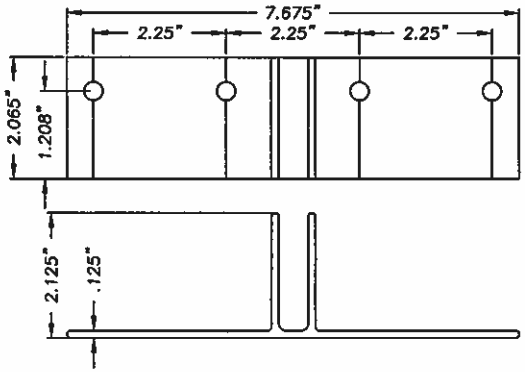

MULLION ANCHOR BRACKET 50-2722
MAT'S: 6063-T6
FOR CONCRETE SCREW ANCHORING
(MIN. LATERAL DESIGN VALUE = 183#)

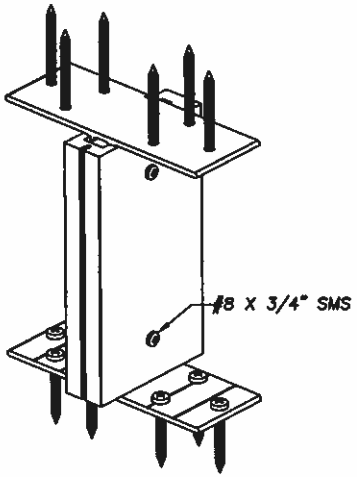

BASIC MULLION BRACKET ANCHORING
2722 BRACKET SHOWN

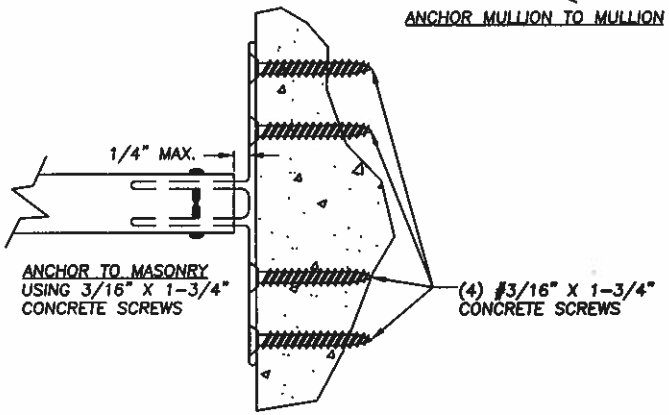

ANCHOR TO MASONRY
USING 3/16" X 1-3/4"
CONCRETE SCREWS

Documents Prepared By:
RW BUILDING CONSULTANTS, INC.
P.O. Box 230 Valrico FL 33595
Phone No.: 813.659.9197
Florida Board of Professional Engineers
Certificate Of Authorization No. 9813
Wendell Haney, FL P.E. #54156

PRODUCT: STRUCTURAL BEAM MULLION FOR USE WITH APPROVED SILVER LINE WINDOWS

PART OR ASSEMBLY: MULLION SECTION DIMENSIONS & ANCHORING DETAILS

NO.	DATE	BY

REVISIONS

DATE: 11/2/04
SCALE: NT.
DWG. BY: RAH
CHG. BY: WWH
DRAWING NO.: TX-360
SHEET 4 OF 4

\\RWBCSRV\RWBC\ACTIVE PROJECTS\VF637\TX-360\TX-360-4.DWG