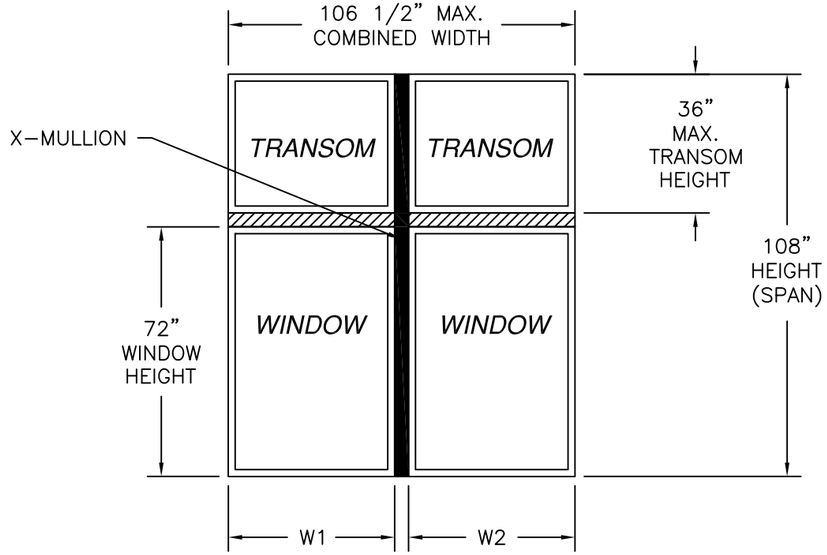

10300085 ALUMINUM X MULLION
REINFORCED LMI WIND ZONE 3

EARTHWISE GROUP, LLC.

MANUFACTURED BY SHOWCASE CUSTOM WINDOWS & DOORS

NOTES:

1) THE PRODUCT SHOWN HEREIN IS DESIGNED AND MANUFACTURED TO COMPLY WITH REQUIREMENTS OF THE I.B.C & I.R.C WITH TEXAS REVISIONS.
2) WOOD FRAMING AND MASONRY OPENING TO BE DESIGNED AND ANCHORED TO PROPERLY TRANSFER ALL LOADS TO STRUCTURE. FRAMING AND MASONRY OPENING IS THE RESPONSIBILITY OF THE ARCHITECT OR ENGINEER OF RECORD.
3) ALLOWABLE STRESS INCREASE OF 1/3 WAS NOT USED IN THE DESIGN OF THE PRODUCT SHOWN HEREIN. WIND LOAD DURATION FACTOR Cd=1.6 WAS USED FOR WOOD ANCHOR CALCULATIONS.
4) APPROVED IMPACT PROTECTIVE SYSTEM IS NOT REQUIRED FOR THIS PRODUCT IN WIND BORNE DEBRIS REGIONS ZONE 3 OR LESS
5) DESIGN PRESSURE AND INSTALLATION DETAILS SHOWN IN THIS DOCUMENT APPLY ONLY TO THE MULLION. WINDOWS MUST BE APPROVED UNDER SEPARATE APPROVAL.
6) SINGLE UNITS TO BE MULLED ARE NOT LIMITED TO THOSE SHOWN IN THIS DRAWING.
7) DESIGN PRESSURE OF MULLED UNIT SHALL BE CONTROLLED BY THE LESSER DESIGN PRESSURE OF THE MULLION OR THE INDIVIDUAL WINDOW UNIT.
8) FOR USE WITH APPLICABLE EARTHWISE PRODUCTS.

Height (in)		Unit width (in)										
Window	Transom	***18.0***	***21.0***	***24.0***	***27.0***	***30.0***	***36.0***	***39.0***	***42.0***	***45.0***	***48.0***	***53.0***
24.0	***36.0***	70.0	70.0	70.0	70.0	70.0	70.0	69.3	65.7	62.4	59.5	55.1
30.0	***36.0***	70.0	70.0	70.0	70.0	70.0	65.3	61.8	58.6	55.8	53.2	49.4
36.0	***36.0***	70.0	70.0	70.0	70.0	66.4	58.4	55.3	52.5	50.0	47.8	44.4
42.0	***36.0***	70.0	70.0	70.0	65.2	60.0	52.5	49.7	47.2	45.0	43.0	40.1
48.0	***36.0***	70.0	70.0	65.7	59.6	54.8	47.3	44.0	41.2	38.7	36.6	33.5
54.0	***36.0***	70.0	63.2	55.8	50.0	45.4	38.5	35.9	33.6	31.6	29.8	27.3
60.0	***36.0***	60.3	52.2	46.0	41.3	37.5	31.8	29.6	27.7	26.1	24.7	22.6
63.0	***36.0***	55.0	47.6	42.0	37.7	34.2	29.1	27.1	25.3	23.8	22.5	20.6
66.0	***36.0***	50.4	43.6	38.5	34.5	31.3	26.6	24.8	23.2	21.8	20.6	18.9
72.0	***36.0***	42.5	36.7	32.4	29.1	26.5	22.5	20.9	19.6	18.5	17.4	16.0
78.0	***36.0***	36.2	31.3	27.6	24.8	22.5	19.1	17.8	16.7	15.7	14.9	13.6
84.0	***36.0***	31.0	26.8	23.7	21.3	19.3	16.4	15.3	14.4	13.5	12.8	11.7

DESIGN PRESSURE TABLE INSTRUCTIONS:

1) DEFINE REQUIRED DESIGN LOAD PER INTERNATIONAL BUILDING CODE OR INTERNATIONAL RESIDENTIAL CODE.
2) DETERMINE TRIBUTARY WIDTH AND MULLION SPAN BASED ON PRODUCT TO BE INSTALLED. SEE FORMULA FOR TRIBUTARY WIDTH.
3) LOCATE MULLION SPAN (UNIT HEIGHT) AND TRIBUTARY WIDTH. AT THE INTERSECTION OF ROW AND COLUMN CONTAINING THE MULLION SPAN AND TRIBUTARY WIDTH RESPECTIVELY IS THE MULLION RATING FOR PRODUCT IN STEP 2. MULLION RATING MUST BE EQUAL OR GREATER THAN REQUIRED DESIGN PRESSURE OBTAINED IN STEP 1.

$$\text{TRIBUTARY WIDTH} = \frac{W1 + W2}{2}$$

Digitally signed by Hermes F. Norero, P.E.
Reason: I am approving this document
Date: 2016.05.25 17:39:30 -04'00'

TABLE OF CONTENTS

SHEET NO.	DESCRIPTION
1	ELEVATION, NOTES AND DESIGN PRESSURE CHART
2, 3	INSTALLATION DETAILS AND BILL OF MATERIALS
4	COMPONENTS

SHOWCASE
CUSTOM VINYL WINDOWS AND DOORS
1702 CULLEN BLVD.,
HOUSTON, TX 77023
PH: 713-926-8500

TITLE: X-REINFORCED MULLION
ELEVATIONS, NOTES, & DP CHART

PREPARED BY:
BUILDING DROPS
398 E. DANIA BEACH BLVD.,
DANIA BEACH, FL 33304
PH: (954) 399-8478 FX: (954) 744-4738

REVISIONS

NO.	DESCRIPTION	BY	DATE
A	CHANGE OF P.E.	LS	12.10.15
B	REV. ANCHOR & DP70	MS	05.06.16

STATE OF TEXAS
HERMES F. NORERO
118471
PROFESSIONAL ENGINEER

DATE: 03.12.14
DWN BY: SSM
CHK BY: HFN
SCALE: NTS
DWG #: SCV004
SHEET: 1 OF 4

PARTS LIST				
NO.	PART NUMBER	DESCRIPTION	MANUFACTURER	MATERIAL
1	10300085	ALUMINUM VERTICAL MULLION	DECEUNINCK	ALUMINUM 6005-T5
2	10203000	15GA. STEEL MULLION BRACKET	DECEUNINCK	GALVANIZED STEEL
3	10300093	MULL CLIP	DECEUNINCK	ALUMINUM 6005-T5
4		MULLION REINFORCEMENT		STEEL

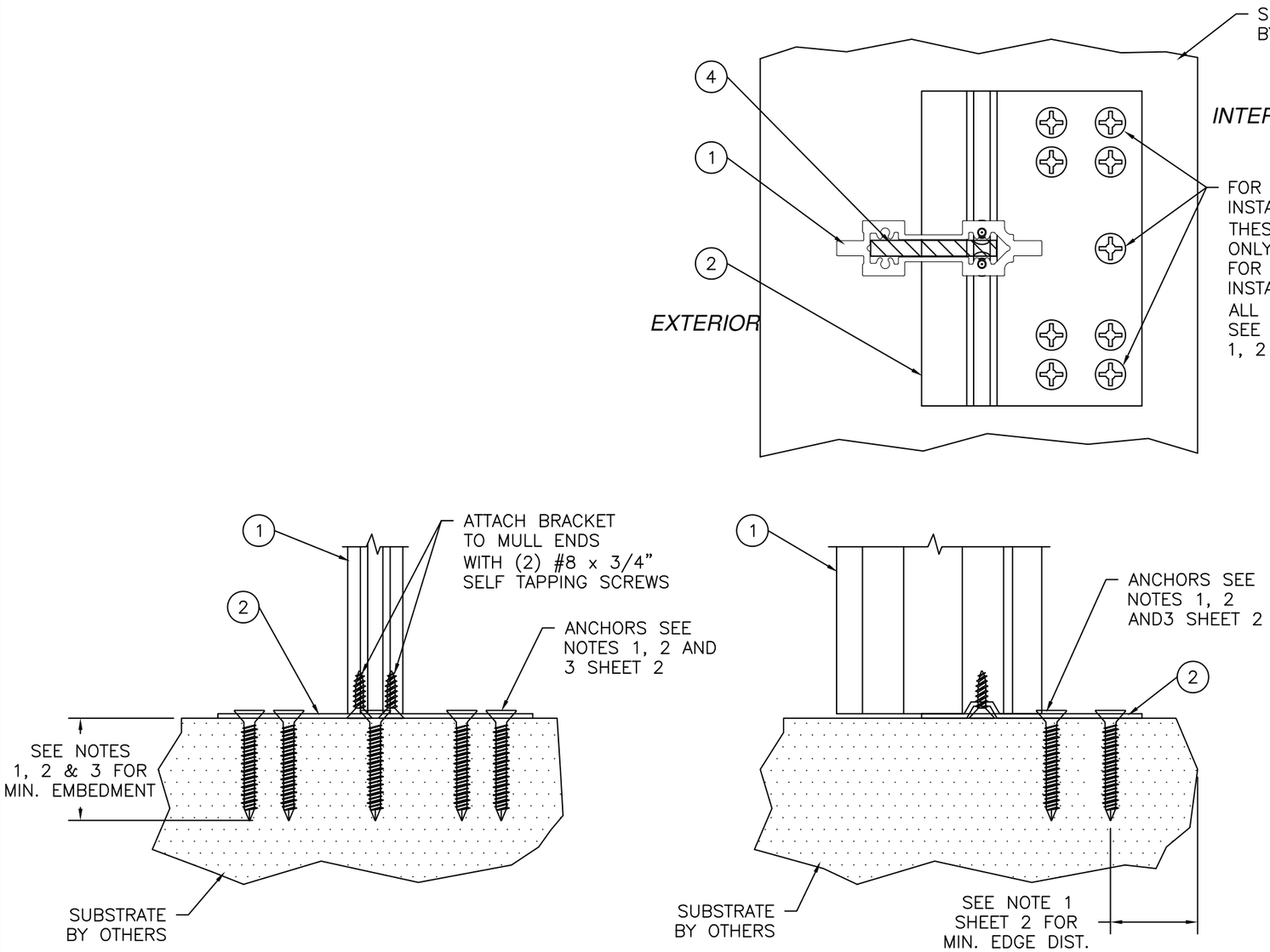

STEEL MULION BRACKET 10203000
INSTALLATION DETAILS
SILL, HEAD AND JAMBS TYP.

ANCHORING NOTES:

1) FOR ANCHORING MULLION BRACKET OR MULL CLIP INTO MASONRY/CONCRETE USE 3/16" ITW TAPCONS WITH SUFFICIENT LENGTH TO ACHIEVE A 1 3/4" MINIMUM EMBEDMENT INTO SUBSTRATE WITH 2 5/8'' MINIMUM EDGE DISTANCE. LOCATE ANCHORS AS SHOWN IN ELEVATIONS AND INSTALLATION DETAILS.
2) FOR ANCHORING MULLION BRACKET OR MULL CLIP INTO WOOD FRAMING OR 2X BUCK USE #10 WOOD SCREW WITH SUFFICIENT LENGTH TO ACHIEVE A 1 3/8" MINIMUM EMBEDMENT INTO SUBSTRATE. LOCATE ANCHORS AS SHOWN IN ELEVATIONS AND INSTALLATION DETAILS.
3) FOR ANCHORING MULLION BRACKET OR MULL CLIP INTO METAL FRAMING USE #10 TEK SELF TAPPING SCREWS WITH SUFFICIENT LENGTH TO ACHIEVE A MINIMUM EMBEDMENT OF THREE THREADS PAST SUBSTRATE. LOCATE ANCHORS AS SHOWN IN ELEVATIONS AND INSTALLATION DETAILS.
4) FOR WINDOW UNIT ANCHORING TO VERTICAL MULLION SEE INDIVIDUAL WINDOW APPROVAL INSTALLATION INSTRUCTIONS.
5) FOR WINDOW UNIT ANCHORING SCHEDULE TO SUBSTRATE REFER TO INDIVIDUAL WINDOW APPROVAL INSTALLATION INSTRUCTIONS.
6) ALL FASTENERS TO BE CORROSION RESISTANT.
7) INSTALLATION ANCHORS SHALL BE INSTALLED IN ACCORDANCE WITH ANCHOR MANUFACTURER'S INSTALLATION INSTRUCTIONS, AND ANCHORS SHALL NOT BE USED IN SUBSTRATES WITH STRENGTHS LESS THAN THE MINIMUM STRENGTH SPECIFIED BELOW:
   A. WOOD- MINIMUM SPECIFIC GRAVITY OF G=0.42
   B. CONCRETE- MINIMUM COMPRESSIVE STRENGTH OF 2,000 PSI.
   C. MASONRY- STRENGTH CONFORMANCE TO ASTM C-90, GRADE N, TYPE 1 (OR GREATER).
   D. STEEL-MIN. 16 GA. TENSILE YIELD STRENGTH OF 33 KSI
   E. ALUMINUM-MIN. 0.125" THICK, 6063-T5 (f'y=16000 PSI)

SHOWCASE
CUSTOM VINYL WINDOWS AND DOORS
1702 CULLEN BLVD.,
HOUSTON, TX 77023
PH: 713-926-8500

TITLE: X-REINFORCED MULLION
INSTALLATION DETAILS & BILL OF MATERIALS

PREPARED BY:
BUILDING DROPS
398 E. DANIA BEACH BLVD.,
DANIA BEACH, FL 33304
PH: (954) 399-8478 FX: (954) 744-4738

REVISIONS

NO.	DESCRIPTION	BY	DATE
A	CHANGE OF P.E.	LS	12.10.15
B	REV. ANCHOR & DP70	MS	05.06.16

STATE OF TEXAS
HERMES F. NORERO
118471
PROFESSIONAL ENGINEER

DATE: 03.12.14
DWN BY: SSM
CHK BY: HFN
SCALE: NTS
DWG #: SCV004
SHEET: 2 OF 4

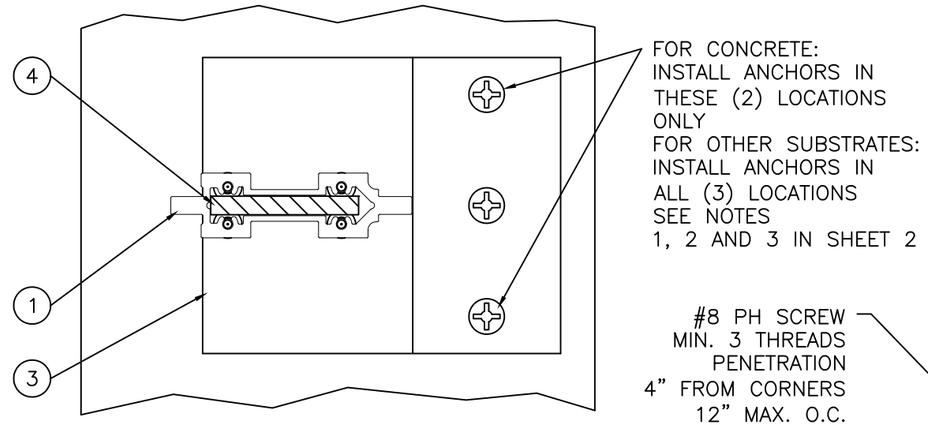

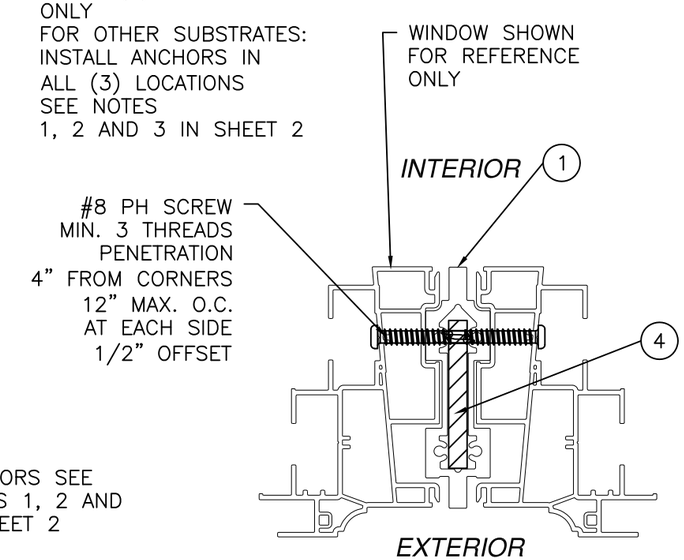

WINDOW TO MULLION INSTALLATION DETAIL

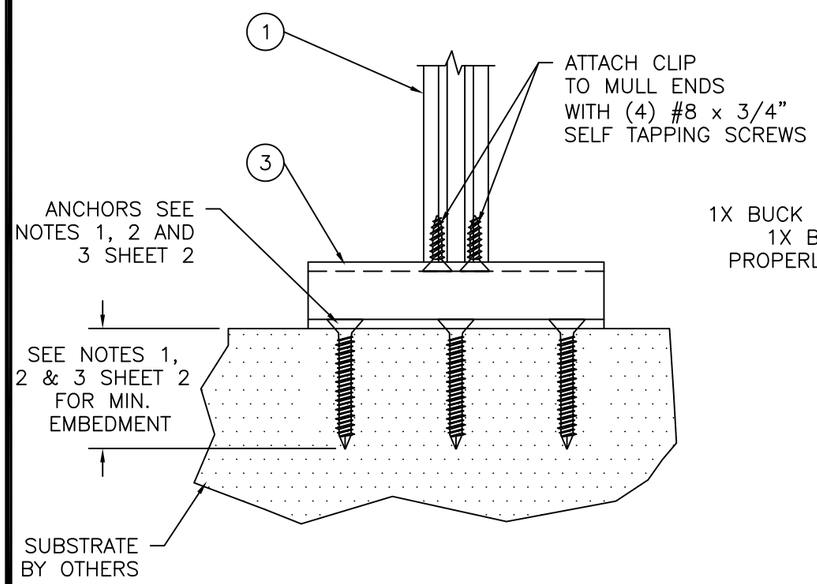

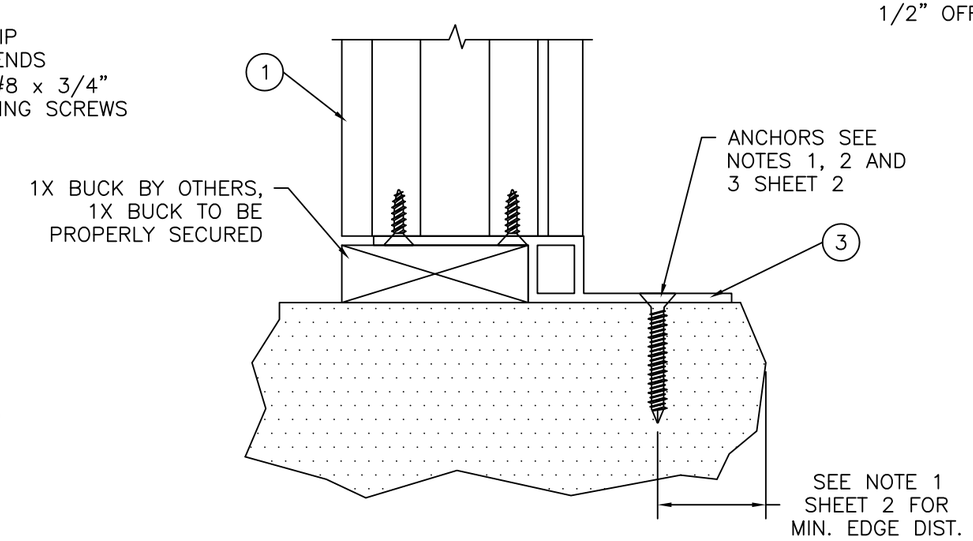

MULL CLIP 10300093
INSTALLATION DETAILS
SILL, HEAD AND JAMBS TYP.

SHOWCASE
CUSTOM VINYL WINDOWS AND DOORS
1702 CULLEN BLVD.,
HOUSTON, TX 77023
PH: 713-926-8500

TITLE: X-REINFORCED MULLION
INSTALLATION DETAILS

PREPARED BY:
BUILDING DROPS
398 E. DANIA BEACH BLVD.,
DANIA BEACH, FL 33304
PH: (954) 399-8478 FX: (954) 744-4738

REVISIONS

NO.	DESCRIPTION	BY	DATE
A	CHANGE OF P.E.	LS	12.10.15
B	REV. ANCHOR & DP70	MS	05.06.16

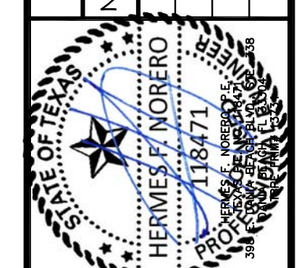

DATE: 03.12.14
DWN BY: SSM
CHK BY: HFN
SCALE: NTS

DWG #: SCV004

SHEET: 3 OF 4

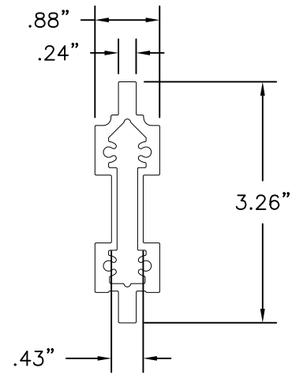

1 *10300085 ALUMINUM VERTICAL MULLION*

ALUMINUM 6005-T5 .075" THICK MINIMUM

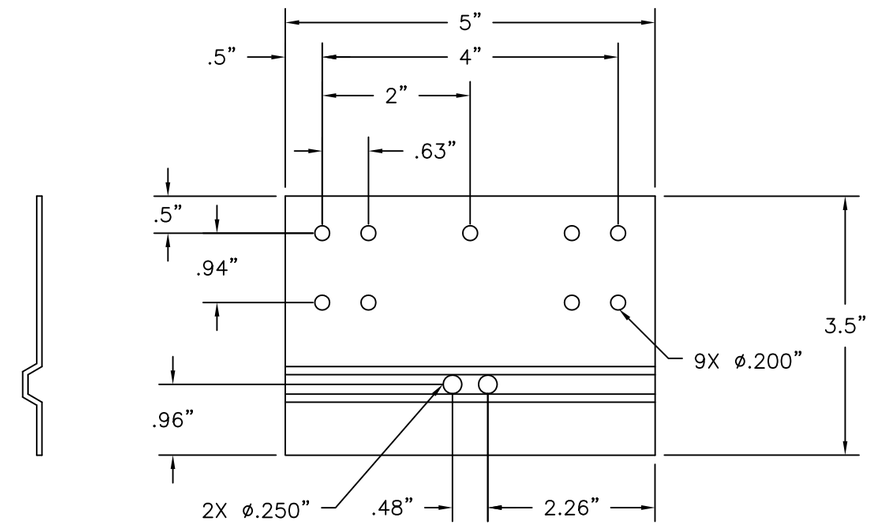

2 *10203000 STEEL MULLION BRACKET*

15GA. GALVANIZED STEEL

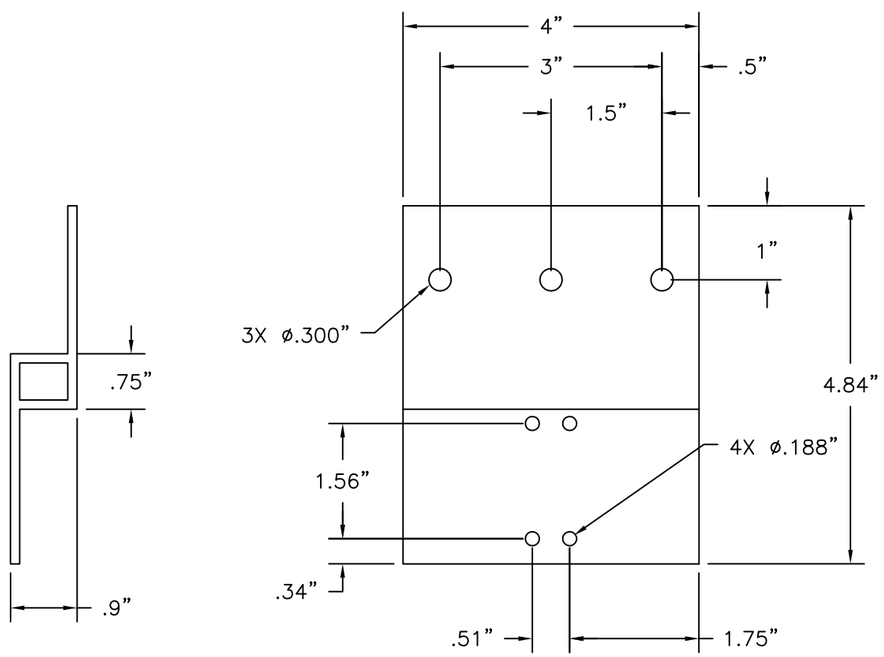

3 *10300093 MULL CLIP*

ALUMINUM 6005-T5 .125" THICK

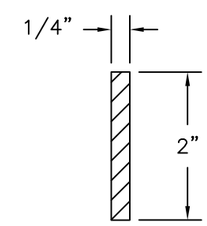

4 *MULLION REINFORCEMENT*

STEEL 1/4" THICK

SHOWCASE
CUSTOM VINYL WINDOWS AND DOORS

1702 CULLEN BLVD.,
HOUSTON, TX 77023

PH: 713-926-8500

TITLE: X-REINFORCED MULLION COMPONENTS

PREPARED BY:
BUILDING DROPS
398 E. DANIA BEACH BLVD.,
DANIA BEACH, FL 33304
PH: (954) 399-8478 FX: (954) 744-4738

REVISIONS

NO.	DESCRIPTION	BY	DATE
A	CHANGE OF P.E.	LS	12.10.15
B	REV. ANCHOR & DP70	MS	05.06.16

STATE OF TEXAS
HERMES F. NORERO
118471
PROFESSIONAL ENGINEER

DATE: 03.12.14	DWN BY: SSM	CHK BY: HFN	SCALE: NTS

DWG #: SCV004

SHEET: 4 OF 4