SilverLine® by Andersen WINDOWS • DOORS

2723
STRUCTURAL BEAM TRANSOM MULLION

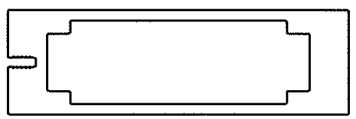

EVALUATED FOR USE IN THE STATE OF TEXAS

The SilverLine Structural Mullion described herein complies with the 2006 International Residential Code (IRC), Sections R613.9 and the 2006 International Building Code (IBC), (including Texas Revisions), subject to the following conditions:

1. Anchors shall be as listed and spaced as shown in the details. Anchor embedment to base material shall be beyond wall covering.
2. When used in areas requiring wind-borne debris protection (Seaward and Inland I areas), this product complies with Section R301.2.1.2 of the IRC and Section 1609.1.2 of the IBC and does not require impact protection. This product meets missile level "D" and includes Wind Zone 3 as defined in ASTM E 1996.
3. Separate product approvals for each glazing product used with these mullions must be submitted along with this mullion product approval. The design pressure rating of the assembly shall be the lesser of the load capacity of the mullion as specified using this approval or the design pressure rating of the individual glazing products used.
4. Anchoring of each glazing product to the mullion shall be as shown in this drawing or as shown in each individual glazing product approval, whichever is more stringent.
5. Any conditions not covered in this evaluation are subject to separate engineering evaluation.

TABLE OF CONTENTS

SHEET #	DESCRIPTION
1	Typical elevations & general notes
2	2723 mullion load table for wood screw anchors
3	2723 mullion load table for concrete screw anchors
4	2723 mullion section dimensions & anchoring

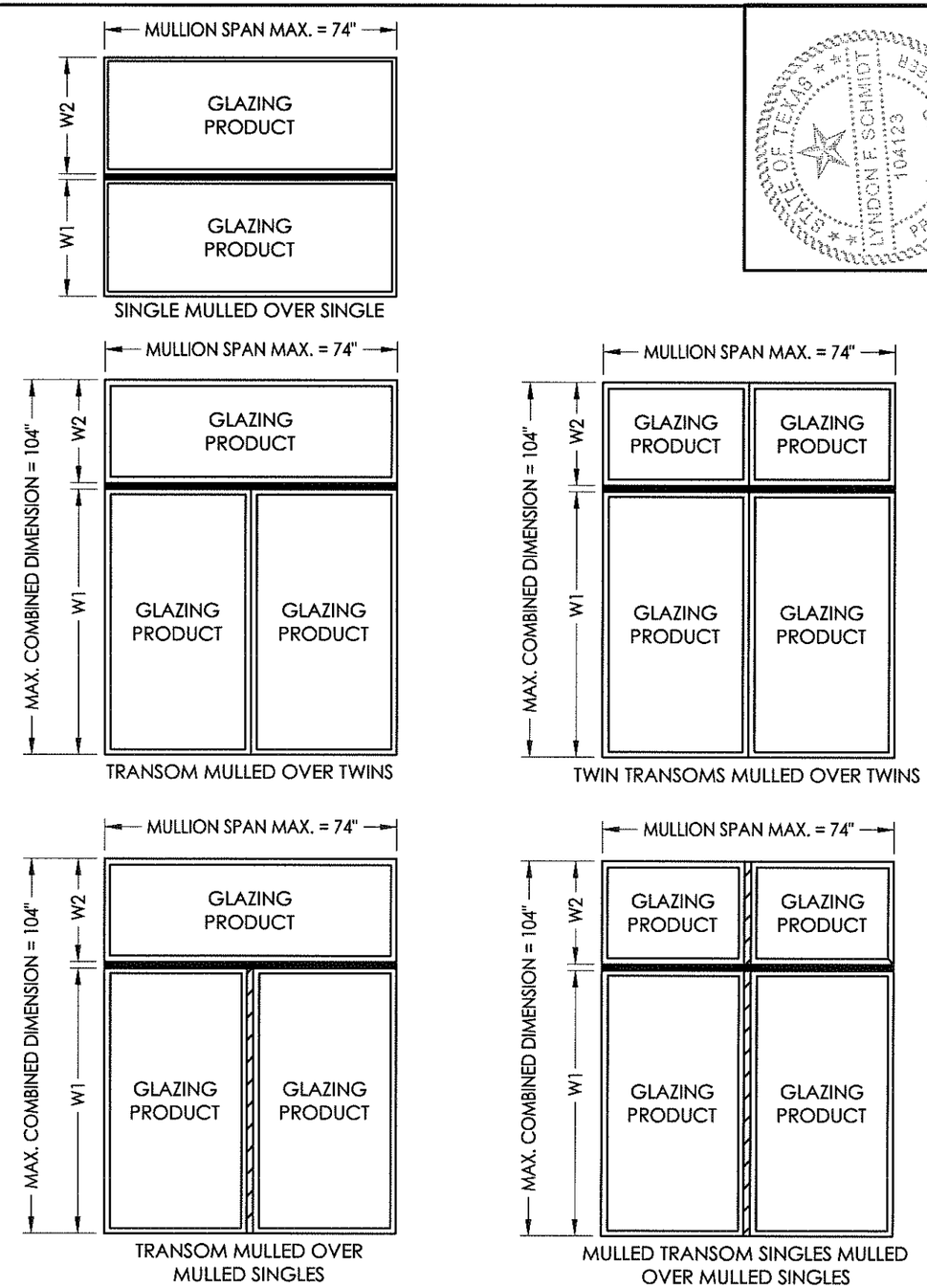

TYPICAL MULLION CONFIGURATIONS

NOTE:
Vertical mullions depicted here are covered under separate approval

STATE OF TEXAS LYNDON F. SCHMIDT 104123 PROFESSIONAL ENGINEER
10-6-14

Documents Prepared By: Lyndon F. Schmidt, P.E. TEXAS P.E. #104123
RW BUILDING CONSULTANTS, INC.
P.O. Box 230 Valrico FL. 33595
Phone No.: 813.659.9197
TEXAS BOARD OF PROFESSIONAL ENGINEERS CERTIFICATE OF REGISTRATION # F-11852

PRODUCT: STRUCTURAL BEAM TRANSOM MULLION

PART OR ASSEMBLY: TYPICAL ELEVATIONS & GENERAL NOTES

REVISIONS

NO.	DATE	BY

DATE: 10/2/14
SCALE: N.T.S.
DWG. BY: JK
CHK. BY: LFS
DRAWING NO.: TX-4488
SHEET 1 OF 4

© 2014 R.W. BUILDING CONSULTANTS INC.

R:\A - Projects\Project Folders\Proj 1201-1300\pf 1245\TEXAS 2014\TX 2723 MULLION.dwg, TX-4488

SILVERLINE 2723 STRUCTRUAL BEAM TRANSOM MULLION LOAD TABLE (PSF)

WOOD SCREW ANCHORS	TRIBUTARY WIDTH												
MULLION SPAN	28"	30"	32"	34"	36"	38"	40"	42"	44"	46"	48"	50"	52"
74"	96.7	90.3	84.6	79.6	75.2	71.2	67.7	64.5	61.5	58.8	56.4	54.1	52.0
72"	100.0	98.0	91.9	86.5	81.6	77.3	73.5	70.0	66.8	63.9	61.2	58.8	56.5
70"	100.0	100.0	100.0	94.1	88.9	84.2	80.0	76.2	72.7	69.5	66.6	64.0	61.5
68"	100.0	100.0	100.0	100.0	96.1	91.1	86.5	82.4	78.7	75.2	72.1	69.2	66.5
66"	100.0	100.0	100.0	100.0	100.0	96.7	91.9	87.5	83.5	79.9	76.5	73.5	70.6
64"	100.0	100.0	100.0	100.0	100.0	100.0	97.7	93.0	88.8	84.9	81.4	78.1	75.1
62"	100.0	100.0	100.0	100.0	100.0	100.0	100.0	99.1	94.6	90.5	86.7	83.3	80.1
60"	100.0	100.0	100.0	100.0	100.0	100.0	100.0	100.0	100.0	96.7	92.6	88.9	85.5
58"	100.0	100.0	100.0	100.0	100.0	100.0	100.0	100.0	100.0	100.0	99.1	95.2	91.5
56"	100.0	100.0	100.0	100.0	100.0	100.0	100.0	100.0	100.0	100.0	100.0	100.0	98.1
54"	100.0	100.0	100.0	100.0	100.0	100.0	100.0	100.0	100.0	100.0	100.0	100.0	100.0
52"	100.0	100.0	100.0	100.0	100.0	100.0	100.0	100.0	100.0	100.0	100.0	100.0	100.0
50"	100.0	100.0	100.0	100.0	100.0	100.0	100.0	100.0	100.0	100.0	100.0	100.0	100.0
48"	100.0	100.0	100.0	100.0	100.0	100.0	100.0	100.0	100.0	100.0	100.0	100.0	100.0
46"	100.0	100.0	100.0	100.0	100.0	100.0	100.0	100.0	100.0	100.0	100.0	100.0	100.0
44"	100.0	100.0	100.0	100.0	100.0	100.0	100.0	100.0	100.0	100.0	100.0	100.0	100.0
42"	100.0	100.0	100.0	100.0	100.0	100.0	100.0	100.0	100.0	100.0	100.0	100.0	100.0
40"	100.0	100.0	100.0	100.0	100.0	100.0	100.0	100.0	100.0	100.0	100.0	100.0	100.0
38"	100.0	100.0	100.0	100.0	100.0	100.0	100.0	100.0	100.0	100.0	100.0	100.0	100.0
36"	100.0	100.0	100.0	100.0	100.0	100.0	100.0	100.0	100.0	100.0	100.0	100.0	100.0
34"	100.0	100.0	100.0	100.0	100.0	100.0	100.0	100.0	100.0	100.0	100.0	100.0	100.0
32"	100.0	100.0	100.0	100.0	100.0	100.0	100.0	100.0	100.0	100.0	100.0	100.0	100.0
30"	100.0	100.0	100.0	100.0	100.0	100.0	100.0	100.0	100.0	100.0	100.0	100.0	100.0
28"	100.0	100.0	100.0	100.0	100.0	100.0	100.0	100.0	100.0	100.0	100.0	100.0	100.0
26"	100.0	100.0	100.0	100.0	100.0	100.0	100.0	100.0	100.0	100.0	100.0	100.0	100.0
24"	100.0	100.0	100.0	100.0	100.0	100.0	100.0	100.0	100.0	100.0	100.0	100.0	100.0

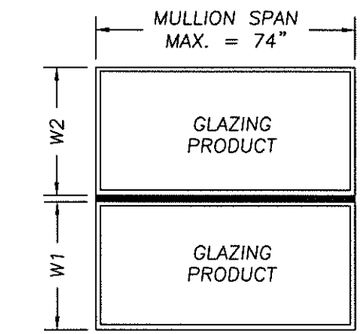

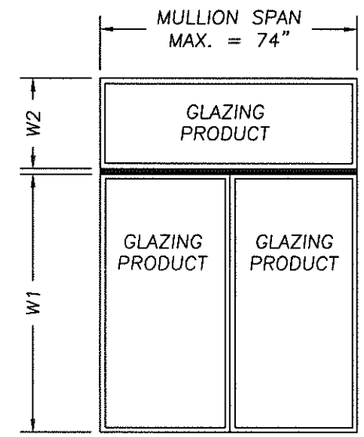

INSTRUCTIONS FOR USE OF THE MULLION LOAD TABLE:

1. Determine the design load requirement for the particular opening as specified by the Building Designer (Architect or Engineer of Record).
2. For the particular opening, determine the tributary width and mullion span. Reference the sketches on this sheet for mullion span and tributary width determination.
3. In the first column of the table, locate the mullion span. In the first row of the table, locate the tributary width. At the intersection of the row containing the mullion span and the column containing the tributary width, read the mullion load rating given in psf. The mullion load rating must be equal to or greater than the design load requirement determined in step 1 above.

$$\text{TRIBUTARY WIDTH} = \frac{W1 + W2}{2}$$

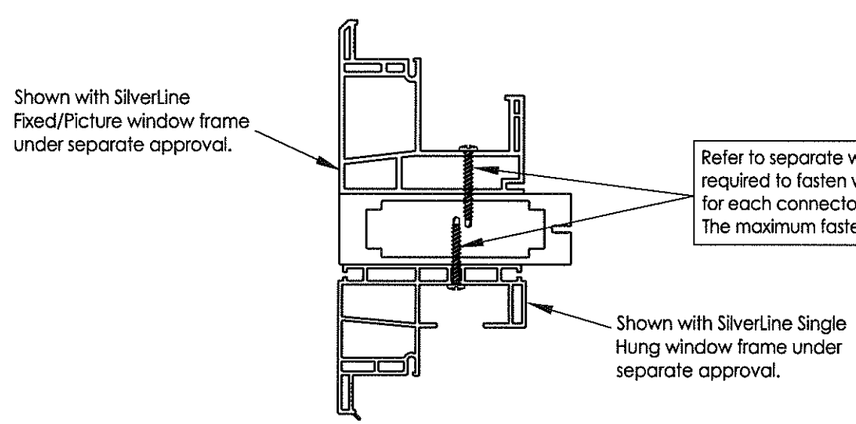

Refer to separate window approval for quantity, location, size & head type of anchors required to fasten window frame to mullion. At a minimum, substitute a #10-16 Self-Drilling SMS for each connector with at least 3 threads protruding completely through the mullion face. The maximum fastener spacing allowed is 6" from each end and 16" o.c. max. spacing.

SECTION THRU MULLION AND FRAME

APPROVED WINDOW UNIT TYPES

- Fixed/Picture Windows
- Casement Windows
- Awning Windows
- Horizontal Slider Windows
- Single Hung Windows
- Double Hung Windows

STATE OF TEXAS — LYNDON F. SCHMIDT — 104123 — LICENSED PROFESSIONAL ENGINEER

Documents Prepared By: Lyndon F. Schmidt, P.E.
TEXAS P.E. #104123

R/W BUILDING CONSULTANTS, INC.
P.O. Box 230 Valrico FL 33595
Phone No.: 813.659.9197

TEXAS BOARD OF PROFESSIONAL ENGINEERS
CERTIFICATE OF REGISTRATION # F-11852

PRODUCT: STRUCTURAL BEAM TRANSOM MULLION

PART OR ASSEMBLY: 2723 MULLION LOAD TABLE FOR WOOD SCREW ANCHORS

NO.	DATE	REVISIONS	BY

DATE: 10/2/14
SCALE: N.T.S.
DWG. BY: JK
CHK. BY: LFS
DRAWING NO.: TX-4488
SHEET 2 OF 4

© 2014 R.W. BUILDING CONSULTANTS INC.

R:\A - Projects\Project Folders\Proj 1201-1300\pf 1245\TEXAS 2014\TX 2723 MULLION.dwg, 8-2

SILVERLINE 2723 STRUCTRUAL BEAM TRANSOM MULLION LOAD TABLE (PSF)

CONCRETE SCREW ANCHORS

MULLION SPAN	TRIBUTARY WIDTH 28"	30"	32"	34"	36"	38"	40"	42"	44"	46"	48"	50"	52"
74"	77.8	72.6	68.1	64.1	60.5	57.3	54.4	51.8	49.5	47.3	45.4	43.5	41.9
72"	80.0	74.6	70.0	65.8	62.2	58.9	56.0	53.3	50.9	48.6	46.6	44.8	43.0
70"	82.2	76.8	72.0	67.7	64.0	60.6	57.6	54.8	52.3	50.0	48.0	46.0	44.3
68"	84.7	79.0	74.1	69.7	65.8	62.4	59.2	56.4	53.9	51.5	49.4	47.4	45.6
66"	87.2	81.4	76.3	71.8	67.8	64.3	61.0	58.1	55.5	53.1	50.9	48.8	46.9
64"	90.0	84.0	78.7	74.1	70.0	66.3	63.0	60.0	57.2	54.7	52.5	50.4	48.4
62"	92.9	86.7	81.2	76.5	72.2	68.4	65.0	61.9	59.1	56.5	54.1	52.0	50.0
60"	96.0	89.6	84.0	79.0	74.6	70.7	67.2	64.0	61.0	58.4	56.0	53.7	51.6
58"	99.3	92.6	86.8	81.7	77.2	73.1	69.5	66.2	63.1	60.4	57.9	55.6	53.4
56"	100.0	96.0	90.0	84.7	80.0	75.7	72.0	68.5	65.4	62.6	60.0	57.6	55.3
54"	100.0	99.5	93.3	87.8	82.9	78.5	74.6	71.1	67.8	64.9	62.2	59.7	57.4
52"	100.0	100.0	96.9	91.2	86.1	81.6	77.5	73.8	70.4	67.4	64.6	62.0	59.6
50"	100.0	100.0	100.0	94.8	89.6	84.8	80.6	76.8	73.3	70.1	67.2	64.5	62.0
48"	100.0	100.0	100.0	98.8	93.3	88.4	84.0	80.0	76.3	73.0	70.0	67.2	64.6
46"	100.0	100.0	100.0	100.0	97.3	92.2	87.6	83.4	79.6	76.2	73.0	70.1	67.4
44"	100.0	100.0	100.0	100.0	100.0	96.4	91.6	87.2	83.3	79.6	76.3	73.3	70.4
42"	100.0	100.0	100.0	100.0	100.0	100.0	96.0	91.4	87.2	83.4	80.0	76.8	73.8
40"	100.0	100.0	100.0	100.0	100.0	100.0	100.0	96.0	91.6	87.6	84.0	80.6	77.5
38"	100.0	100.0	100.0	100.0	100.0	100.0	100.0	100.0	96.4	92.2	88.4	84.8	81.6
36"	100.0	100.0	100.0	100.0	100.0	100.0	100.0	100.0	100.0	97.3	93.3	89.6	86.1
34"	100.0	100.0	100.0	100.0	100.0	100.0	100.0	100.0	100.0	100.0	98.8	94.8	91.2
32"	100.0	100.0	100.0	100.0	100.0	100.0	100.0	100.0	100.0	100.0	100.0	100.0	96.9
30"	100.0	100.0	100.0	100.0	100.0	100.0	100.0	100.0	100.0	100.0	100.0	100.0	100.0
28"	100.0	100.0	100.0	100.0	100.0	100.0	100.0	100.0	100.0	100.0	100.0	100.0	100.0
26"	100.0	100.0	100.0	100.0	100.0	100.0	100.0	100.0	100.0	100.0	100.0	100.0	100.0
24"	100.0	100.0	100.0	100.0	100.0	100.0	100.0	100.0	100.0	100.0	100.0	100.0	100.0

INSTRUCTIONS FOR USE OF THE MULLION LOAD TABLE:

1. Determine the design load requirement for the particular opening as specified by the Building Designer (Architect or Engineer of Record).
2. For the particular opening, determine the tributary width and mullion span. Reference the sketches on this sheet for mullion span and tributary width determination.
3. In the first column of the table, locate the mullion span. In the first row of the table, locate the tributary width. At the intersection of the row containing the mullion span and the column containing the tributary width, read the mullion load rating given in psf. The mullion load rating must be equal to or greater than the design load requirement determined in step 1 above.

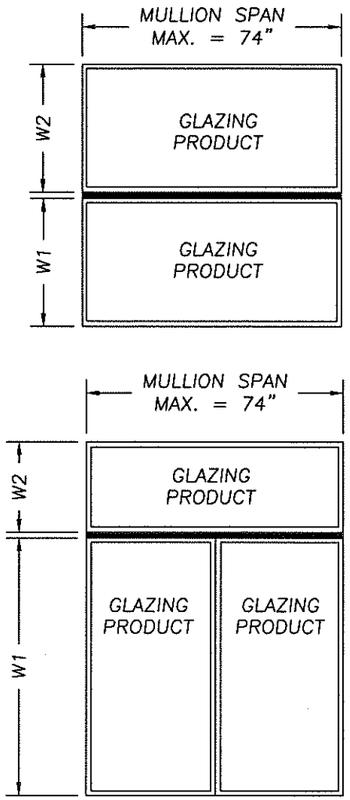

$$\text{TRIBUTARY WIDTH} = \frac{W1 + W2}{2}$$

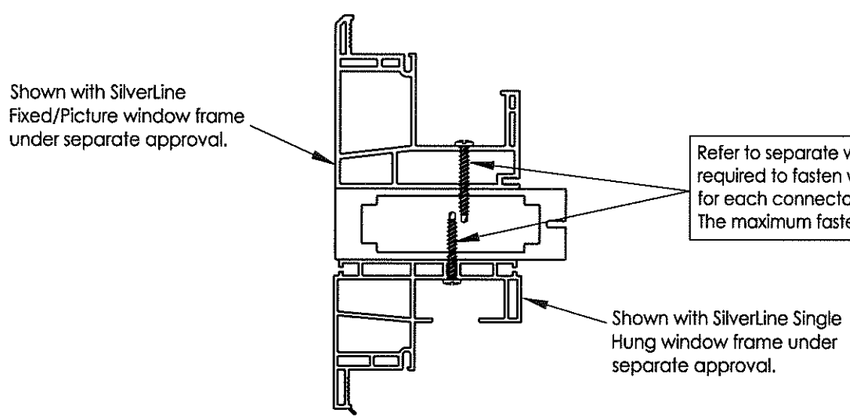

SECTION THRU MULLION AND FRAME

APPROVED WINDOW UNIT TYPES

- Fixed/Picture Windows
- Casement Windows
- Awning Windows
- Horizontal Slider Windows
- Single Hung Windows
- Double Hung Windows

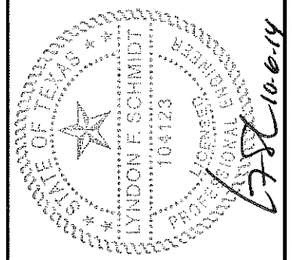

10-6-14

Documents Prepared By: Lyndon F. Schmidt, P.E.
TEXAS P.E. #104123

RW BUILDING CONSULTANTS, INC.
P.O. Box 230 Valrico FL. 33595
Phone No.: 813.659.9197

TEXAS BOARD OF PROFESSIONAL ENGINEERS
CERTIFICATE OF REGISTRATION # F-11852

PRODUCT: STRUCTURAL BEAM TRANSOM MULLION

PART OR ASSEMBLY: 2723 MULLION LOAD TABLE FOR CONCRETE SCREW ANCHORS

NO.	DATE	REVISIONS	BY

DATE: 10/2/14
SCALE: N.T.S.
DWG. BY: JK
CHK. BY: LFS
DRAWING NO.: TX-4488
SHEET 3 OF 4

© 2014 R.W. BUILDING CONSULTANTS INC.

R:\A - Projects\Project Folders\Proj 1201-1300\pf 1245\TEXAS 2014\TX 2723 MULLION.dwg, 8-3

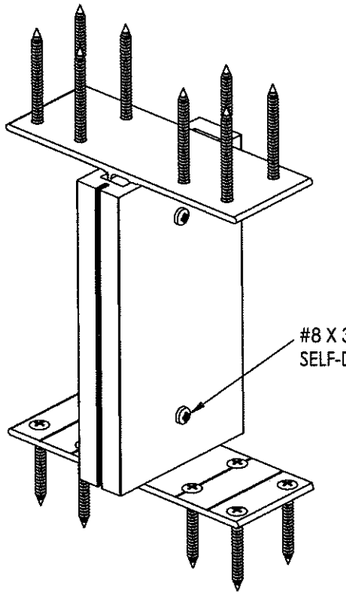

MULLION BRACKET ANCHORING
2722 BRACKET SHOWN
(WOOD SCREW ANCHORING SHOWN)

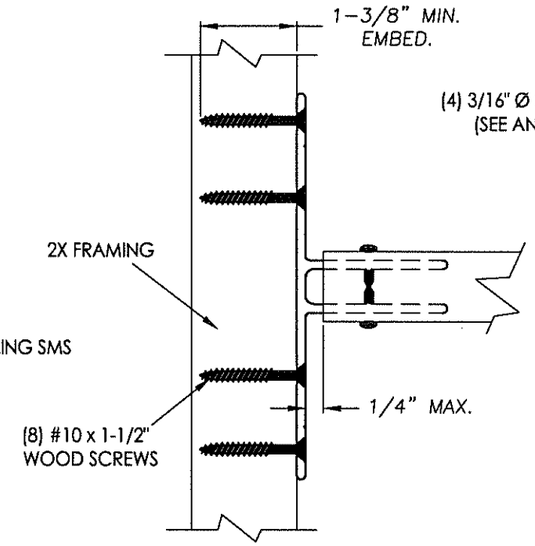

ANCHOR TO 2X STUD OR TO 2X BUCK

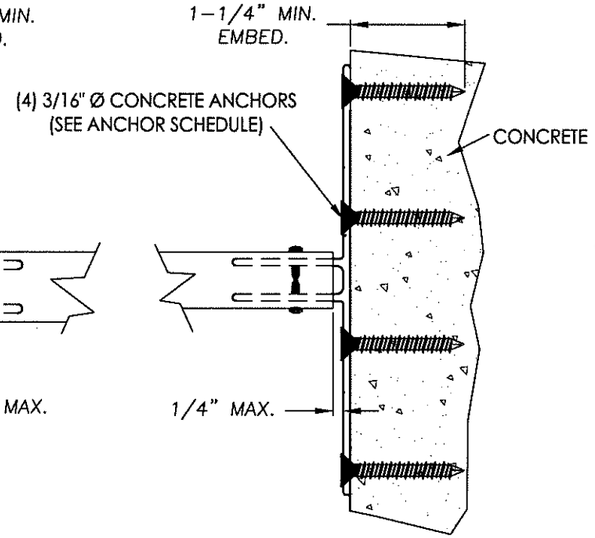

ANCHOR TO MASONRY

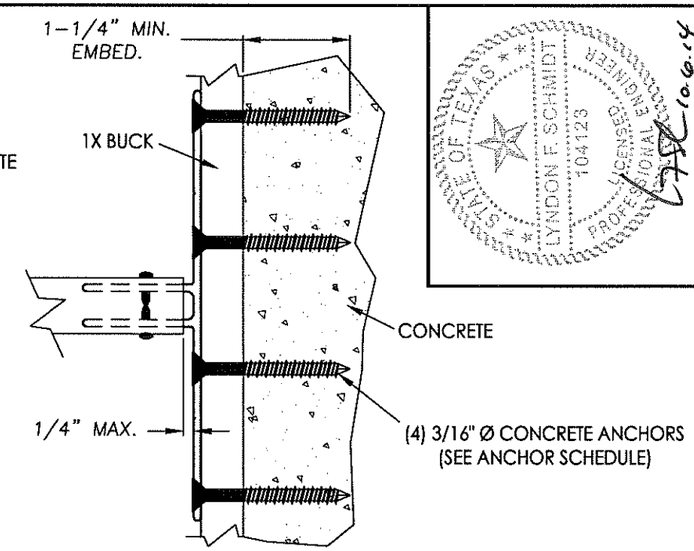

ANCHOR TO MASONRY THROUGH 1X BUCK

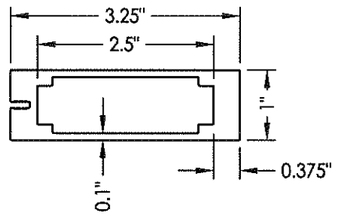

2723 MULLION
(6063-T6 ALUM)

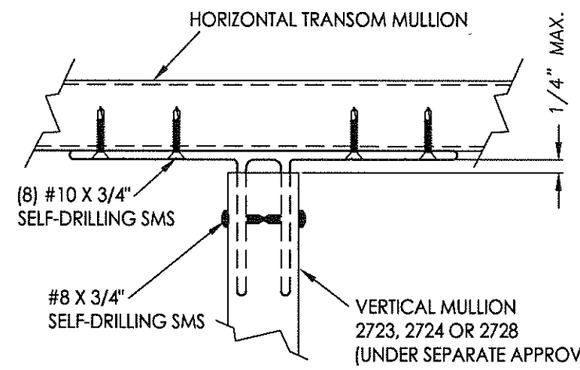

ANCHOR MULLION TO MULLION

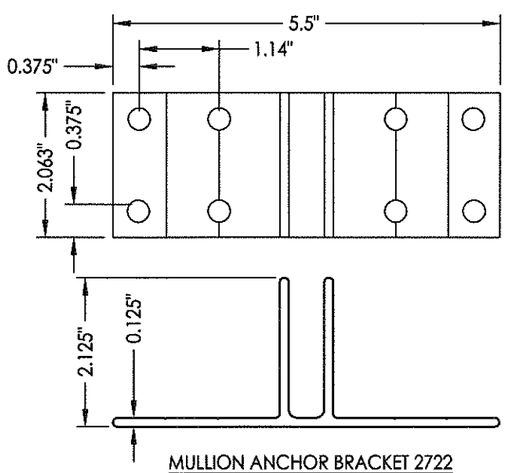

MULLION ANCHOR BRACKET 2722
(6063-T6 ALUM)
FOR WOOD SCREW OR MULLION TO MULLION ANCHORING

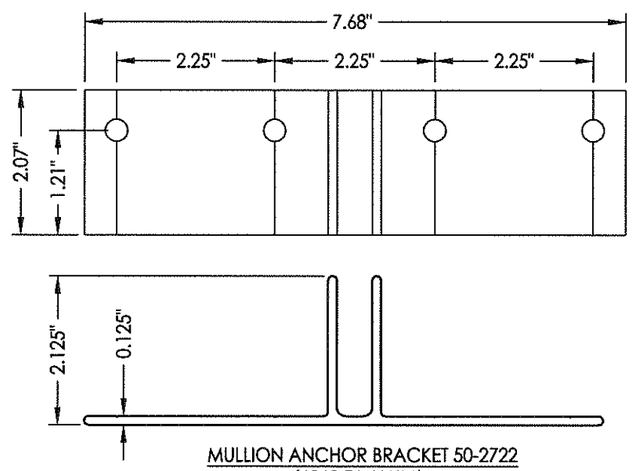

MULLION ANCHOR BRACKET 50-2722
(6063-T6 ALUM)
FOR CONCRETE ANCHORING

MULLION ANCHOR BRACKET ANCHOR SCHEDULE

ANCHOR	SUBSTRATE	EMBEDMENT (MIN.)	EDGE DISTANCE (MIN.)	CENTER-TO-CENTER SPACING (MIN.)
#10 PFH WOOD SCREW	WOOD	1-3/8"	1"	1-1/8"
#10-16 SELF-DRILLING SHEET METAL SCREW	STEEL	A MIN. OF 3 THREADS SHALL PROTRUDE COMPLETELY THROUGH THE STEEL SUBSTRATE	1"	1-1/8"
3/16" Ø PFH HILTI KWIK-CON II+	HOLLOW BLOCK	1-1/4"	1-1/2"	2"
	CONCRETE	1-1/4"	1-1/2"	2"

WOOD FRAMING (S.G. >= 0.42)
STEEL CONFORMING TO ASTM A653, 16 GA. , 0.060" MIN. THICKNESS (Fy = 33,000 PSI, Fu = 45,000 PSI)
SHEET METAL SCREWS (SAE GRADE 5 MIN.): HILTI KWIK-FLEX or ELCO DRIL-FLEX
CONCRETE CONFORMING TO ACI 301 (3,000 PSI MIN.) OR HOLLOW BLOCK CONFORMING TO ASTM C90

STATE OF TEXAS
LYNDON F. SCHMIDT
104123
LICENSED PROFESSIONAL ENGINEER
10-2-14

Documents Prepared By: Lyndon F. Schmidt, P.E.
TEXAS P.E. #104123
RW BUILDING CONSULTANTS, INC.
P.O. Box 230 Valrico FL 33595
Phone No.: 813.659.9197
TEXAS BOARD OF PROFESSIONAL ENGINEERS
CERTIFICATE OF REGISTRATION # F-11852

PRODUCT: STRUCTURAL BEAM TRANSOM MULLION
PART OR ASSEMBLY: 2723 MULLION SECTION DIMENSIONS & ANCHORING

NO.	DATE	REVISIONS	BY

DATE: 10/2/14
SCALE: N.T.S.
DWG. BY: JK
CHK. BY: LFS
DRAWING NO.: TX-4488
SHEET 4 OF 4

© 2014 R.W. BUILDING CONSULTANTS INC.

R:\A - Projects\Project Folders\Proj 1201-1300\pf 1245\TEXAS 2014\TX 2723 MULLION.dwg, 8-4