GENERAL NOTES:

1. SED-5.1 LOUVER SYSTEM WITH OR WITHOUT CD-151 DAMPER SHOWN ON THIS PRODUCT EVALUATION DOCUMENT (P.E.D.) HAS BEEN VERIFIED FOR COMPLIANCE IN ACCORDANCE WITH THE 2006 EDITION OF THE INTERNATIONAL BUILDING CODE, (I.B.C) AND INTERNATIONAL RESIDENTIAL CODE, (I.R.C) WITH THE 2006 TEXAS REVISIONS, EFFECTIVE JANUARY 1, 2008.

   DESIGN WIND LOADS SHALL BE DETERMINED AS PER SECTION 1609 OF THE INTERNATIONAL BUILDING CODE, FOR A BASIC WIND SPEED AS REQUIRED BY THE JURISDICTION WHERE PRODUCT WILL BE INSTALLED, AND FOR A DIRECTIONALITY FACTOR Kd = 0.85, IN ACCORDANCE WITH ASCE 7-05 STANDARD, AND SHALL NOT EXCEED THE DESIGN PRESSURE RATING INDICATED ON THIS NOTE.

   IN ORDER TO VERIFY THAT ANCHORS ON THIS P.E.D., AS TESTED, WERE NOT OVERSTRESSED, A 33% INCREASE IN ALLOWABLE STRESS FOR WIND LOADS WAS NOT USED IN THEIR ANALYSIS. FASTENERS SPACING TO WOOD HAS BEEN DETERMINED IN ACCORDANCE WITH N.D.S. 2005.

   SED-5.1 LOUVER SYSTEM WITH OR WITHOUT CD-151 DAMPER ADEQUACY FOR IMPACT AND CYCLIC RESISTANCE HAS BEEN VERIFIED IN ACCORDANCE WITH SECTIONS 1609.1.4 AND R301.2.1.2 OF THE ABOVE MENTIONED CODES RESPECTIVELY, AS PER FLORIDA BUILDING CODE HIGH VELOCITY HURRICANE ZONES PROTOCOLS TAS-201, TAS-202, TAS-203, PER AMERICAN TESTING LAB REPORT # 0514.01-08, AS WELL AS PER ANSI/AMCA IMPACT STANDARD 540, PER INTERTEK/ARCHITECTURAL TESTING REPORT # F 3136.01-550-44 & PRI TECHNOLOGIES LAB REPORT # UEC-001-02-01, PER TAS-100A (WIND DRIVEN RAIN, EXCEEDS ANSI/AMCA 550-09 STANDARD) , AND AS PER SUBMITTED STRUCTURAL CALCULATIONS, PERFORMED AS PER SECTION 1604 OF THE ABOVE MENTIONED BUILDING CODE.

   DESIGN PRESSURE RATING:
   VARIES (psf), FOR ALL SINGLE UNITS W/ SQUARE EDGES WITHOUT MULLIONS WITH OR WITHOUT DAMPER. (SEE SCHEDULE ON SHEET 4A), AND +150, -150 psf. FOR ALL SINGLE UNITS W/ CURVED EDGES W/O DAMPER.

   VARIES (psf), FOR ALL MULTIPLE UNITS WITH MULLIONS (12L) WITH OR WITHOUT DAMPER (SEE SCHEDULE ON SHEET 15).

2. ALL ALUMINUM EXTRUSIONS SHALL BE 6063-T5 ALLOY WITH MIN. SPECIFIC YIELD STRENGTHS AS SHOWN ON SHEETS 2 AND 3

3. ALL SCREWS AND BOLTS INSTALLED AT SEAWARD AREAS TO BE STAINLESS STEEL 304 OR 316 AISI SERIES AND MEET ASTM A167, OR HOT DIPPED GALVANIZED (AFTER FABRICATION) CARBON STEEL AS PER ASTM A 123 OR ASTM A153, OR HOT DIPPED GALVANIZED OR GALVANNEALED (PRIOR TO FABRICATION) AND MEET ASTM A653 WITH 50 ksi YIELD STRENGTH AND 90 hsi TENSILE STRENGTH, PER 2006 TEXAS REVISIONS TO SECTION TO SECTION 1716.1.2 OF THE 2006 I.B.C AND SECTION R324.1.1 OF THE 2006 I.R.C.

   ALL SCREWS AND BOLTS INSTALLED AT INLAND I AREAS TO BE STAINLESS STEEL 304 OR 316 AISI SERIES AND MEET ASTM A167, OR HOT SIPPED GALVANIZED (AFTER FABRICATION) CARBON STEEL AS PER ASTM A123 OR ASTM A153, OR HOT DIPPED GALVANIZED OR GALVANNEALED (PRIOR TO FABRICATION) AND MEET ASTM A653; HOT DIP GALVANIZED OR ELECTRO GALVANIZED PER ASTM A641, MECHANICALLY DEPOSITED ZINC COATING PER ASTM B695 OR ELECTRO DEPOSITED ZINC COATINGS PER ASTM BL33, PER THE 2006 TEXAS REVISIONS TO SECTION 1716.1.2 OF THE 2006 I.B.C AND TO SECTION R324.1.2 OF THE 2006 I.R.C.

4. ALL WELDING OF ALUMINUM FRAMING SHALL BE IN ACCORDANCE WITH THE AMERICAN WELDING SOCIETY A.W.S. D.1.2 2004 EDITION REGULATIONS. USE CERTIFIED WELDERS. USE ER-5356 ELECTRODES.

5. ANCHORS TO EXISTING STRUCTURE'S JAMBS SHALL BE AS FOLLOWS (SEE SHEETS 11 AND 16):

   - ANCHORS SHALL BE INSTALLED FOLLOWING ALL OF THE RECOMMENDATIONS AND SPECIFICATIONS OF THE ANCHOR'S MANUFACTURER. E.D. IS BEYOND ANY WALL FINISH.

ANCHOR TYPE	MANUFACTURER	DIAMETER OR GAGE	MIN. EMBEDMENT			MIN. EDGE DISTANCE (E.D)	
			TO CONCRETE (f'c= 3192psi) MIN.	TO CONCRETE BLOCK (C-90 UNIT)	TO 1/8" MIN. STEEL Fy=33 ksi (MIN.)	CONCRETE OR CONCRETE BLOCK	STEEL
TAPCONS	ITW/ BUILDEX	1/4"	1-3/4"	1-1/4"	N/A	3"	N/A
TEK SCREWS	ITW/ BUILDEX	1/4"	N/A	N/A	3/4"	N/A	1"

   - ANCHORS FOR MULLION CONNECTIONS SHALL BE AS INDICATED ON SHEETS 12 AND 13

6. SED-5.1 LOUVER SYSTEM WITHOUT CD-151 DAMPER SHALL ONLY BE INSTALLED IN A LOCATION WHERE THE ROOM BEHIND THE LOUVER IS DESIGNED TO DRAIN WATER PENETRATING INTO THE ROOM, AND THE ROOM WILL HOUSE WATER RESISTANT/WATER PROOF EQUIPMENT, COMPONENTS OR SUPPLIES.

7. SED-5.1 LOUVER SYSTEM WITH CD-151 DAMPER MAY BE INSTALLED IN LOCATIONS WHERE THE ROOM BEHIND THE LOUVER IS NOT DESIGNED TO DRAIN WATER PENETRATING INTO THE ROOM, OR THE ROOM WILL HOUSE NON-WATER RESISTANT EQUIPMENT, COMPONENTS, OR SUPPLIES. INSTALLATION ON LOUVER WITH DAMPER IS LIMITED TO 40 FT IN HEIGHT ACCORDING TO TABLE 3 OF TAS 100(A)-95.

8. CD-151 DAMPER IS AN OPERABLE ASSEMBLY, IT MAY BE OPERATED BY MEANS OF A HAND QUADRANTHANDLE MECHANISM (AS SHOWN ON SHEET 7) OR THROUGH AN ELECTRICAL OR PNEUMATIC ACTUATOR.
   DAMPER'S OPERATIVE MECHANISM IS NOT PART OF THIS APPROVAL, BUT SHALL BE CERTIFIED BY AN INDEPENDENT TESTING AGENCY.

9. ALL ALUMINUM EXTRUSIONS IN CONTACT WITH STEEL, CONCRETE, GROUT FILLED CONCRETE BLOCK AND WOOD SHALL COMPLY WITH SECTION 6.7 OF THE ALUMINUM DESIGN MANUAL 2005 EDITION.

10. SHOP DRAWINGS PREPARED BASED ON THIS T.D.I REPORT AND TAKING INTO ACCOUNT THE SPECIFIC JOB CONDITIONS, SHALL BE SUBMITTED TO THE BUILDING OFFICIAL AS PART OF THE PERMIT DOCUMENTS.

11. SUBSTRATE MATERIAL NOTED ON THIS DRAWING AS EXISTING BY OTHERS, POURED CONCRETE, GROUT FILLED CONCRETE BLOCK AND WOOD MUST WITHSTAND THE LOADS IMPOSED BY THIS PRODUCT.

12. THIS PRODUCT'S INSTALLATION SHALL COMPLY WITH ALL SPECS INDICATED IN THIS DRAWING PLUS ANY BUILDING AND ZONING REGULATIONS PROVIDED BY THE JURISDICTION WHERE PERMIT IS APPLIED TO.

13. (a) THIS P.E.D. PREPARED BY THIS ENGINEER IS GENERIC AND DOES NOT PROVIDE INFORMATION FOR A SITE SPECIFIC PROJECT; i.e. WHERE THE SITE CONDITIONS DEVIATE FROM THE P.E.D.

    (b) CONTRACTOR TO BE RESPONSIBLE FOR THE SELECTION, PURCHASE AND INSTALLATION INCLUDING LIFE SAFETY OF THIS PRODUCT, BASED ON THIS P.E.D., PROVIDED HE/SHE DOES NOT DEVIATE FROM THE CONDITIONS DETAILED ON THIS DOCUMENT. CONSTRUCTION SAFETY AT SITE IS THE CONTRACTOR'S RESPONSIBILITY.

    (c) THIS P.E.D. WILL BE CONSIDERED INVALID IF ALTERED BY ANY MEANS.

    (d) SITE SPECIFIC PROJECTS SHALL BE PREPARED BY A PROFESSIONAL ENGINEER OR ARCHITECT WHICH WILL BECOME THE ENGINEER OF RECORD (E.O.R.) FOR THE PROJECT AND WHO WILL BE RESPONSIBLE FOR THE PROPER USE OF THE P.E.D. ENGINEER OF RECORD, ACTING AS A DELEGATED ENGINEER TO THE P.E.D. ENGINEER, SHALL SUBMIT TO THIS LATTER THE SITE SPECIFIC DRAWINGS FOR REVIEW.

    (e) ORIGINAL P.E.D. SHALL BEAR THE DATE AND ORIGINAL SEAL AND SIGNATURE OF THE PROFESSIONAL ENGINEER OF RECORD THAT PREPARED IT.

14. PRODUCT MANUFACTURER'S LABEL SHALL BE LOCATED ON A READILY VISIBLE LOCATION AT PRODUCT IN ACCORDANCE WITH TEXAS DEPARTMENT OF INSURANCE REQUIREMENTS. ONE LABEL SHALL BE PLACED FOR EVERY OPENING.

THIS DRAWING SHALL ONLY BE USED TO OBTAIN PERMITS UNDER THE TEXAS DEPARTMENT OF INSURANCE JURISDICTION

1/21/16
90691
P.E. SEAL/SIGNATURE/DATE

TEXAS DEPARTMENT OF INSURANCE - 2006

WALTER A. TILLIT Jr P.E.
PROFESSIONAL ENGINEER
6355 N.W 36 STREET, STE. 305
VIRGINIA GARDENS, FL 33166
PHONE(305) 871-1530 FAX (305) 871-1531
TEXAS LIC. # 90691
FIRM REGISTRATION # F-13790

SED-5.1 LOUVER SYSTEM WITH OR WITHOUT CD-151 DAMPER ASSEMBLY

UNITED ENERTECH, INC.
3005 SOUTH HICKORY ST.
CHATTANOOGA, TN 37407
PHONE: (423)698-7715 FAX:(423)698-6629

REV. NO	DESCRIPTION	DATE	REV. No	DESCRIPTION	DATE
1	-	-	3	-	-
2	-	-	4	-	-

M.L.
DRAWN BY:

01/20/16
DATE:

16-005
DRAWING No.

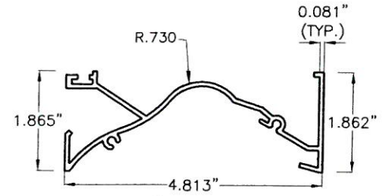

1L HEAD

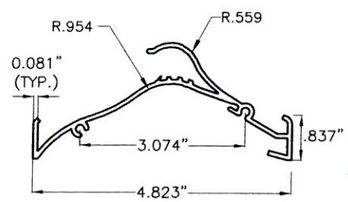

2L BLADE

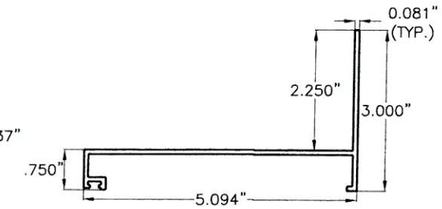

3L SILL

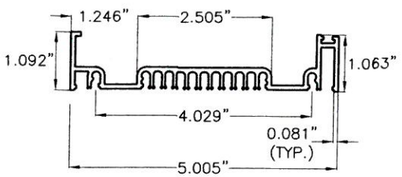

4L JAMB

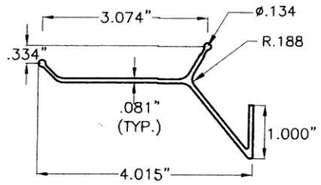

5L BLADE BRACE, 2" LONG

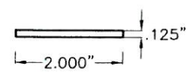

6L BLADE BRACE FLAT BAR

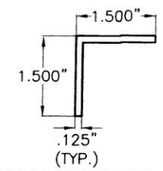

7L JAMB MOUNTING ANGLE

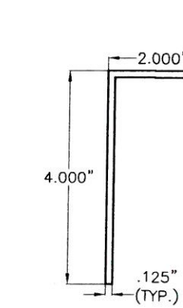

7L1 OPTIONAL JAMB MOUNTING ANGLE

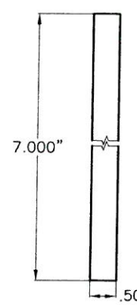

10L FLAT MULLION CLAMP

REQ'D LENGTH = 2" FOR MULLION 12L

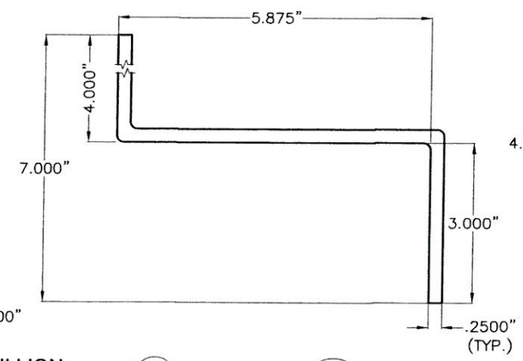

10L1 "Z" MULLION 12L CLAMP 8" LONG

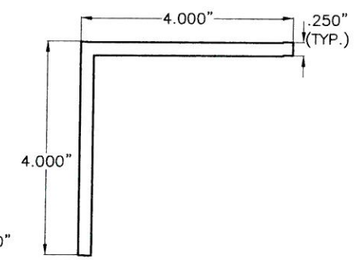

10L2 SLAB ANGLE MULLION 12L BRACKET 8" LONG

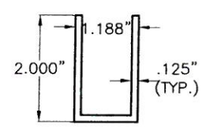

14L MULLION CONNECTOR TYPE 1 AT MULLION 12L 4.278" LONG

15L BLANK-OFF PANEL

4" x .090" x 24"(MAX) ALUM. PLATE

16L BLANK-OFF PANEL

5 1/4" x .090" x 24"(MAX.) ALUM. PLATE

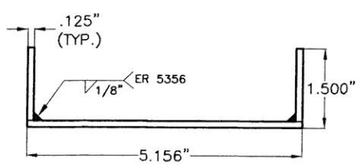

11L PERIMETER WELDED CHANNEL

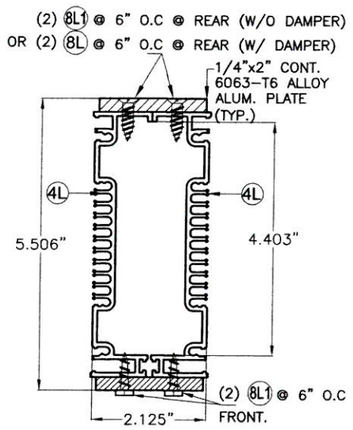

12L MULLION

COMPONENTS

SCALE: 3/8"=1"

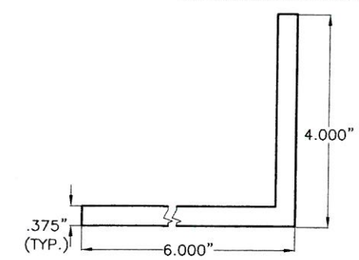

14L1 MULLION CONNECTOR TYPE 2 AT MULLION 12L 8" LONG

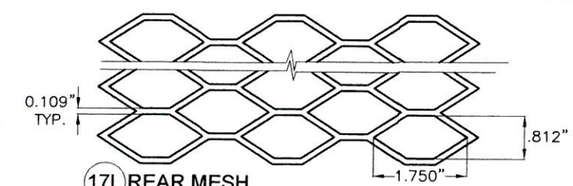

17L REAR MESH

NOMINAL 3/4"x0.050" THICK (0.17 lb/SQ. Ft)

BILL OF MATERIALS SED-5.1 LOUVER ASSEMBLY

ITEM	DESCRIPTION	MATERIAL	SIZE	REMARKS
1L	EXTRUDED ALUM. HEAD	6063-T5 ALLOY	SEE DETAIL	Fy (MIN.) = 16 ksi
2L	EXTRUDED ALUM. BLADE	6063-T5 ALLOY	SEE DETAIL	Fy (MIN.) = 16 ksi
3L	EXTRUDED ALUM. SILL	6063-T5 ALLOY	SEE DETAIL	Fy (MIN.) = 16 ksi
4L	EXTRUDED ALUM. JAMB	6063-T5 ALLOY	SEE DETAIL	Fy (MIN.) = 16 ksi
5L	EXTRUDED ALUM. BLADE BRACE	6063-T5 ALLOY	SEE DETAIL	Fy (MIN.) = 16 ksi
6L	EXTRUDED ALUM. FLAT BAR	6063-T5 ALLOY	SEE DETAIL	Fy (MIN.) = 16 ksi
7L	EXTRUDED ALUM. JAMB MOUNTING ANGLE	6063-T6 ALLOY	SEE DETAIL	Fy (MIN.) = 25 ksi
7L1	OPTIONAL EXTRUDED ALUM. JAMB MOUNTING ANGLE	6063-T6 ALLOY	SEE DETAIL	Fy (MIN.) = 25 ksi
8L	FLAT HEAD TEK SCREWS	ZINC PLATED STEEL	1/4"ø x 3/4" LONG	ITW / BUILDEX
8L1	HEX HEAD TEK SCREWS	ZINC PLATED STEEL	1/4"ø x 1" LONG	ITW / BUILDEX
9L	NEOPRENE WASHER HEAD S.M.S.	410 STAINLESS STEEL	#8 x 1-1/2" LONG	LOUVER BLADE AND FRAME ASSEMBLY (1L , 2L , & 4L)
10L	FLAT MULLION CLAMP	ASTM A-36 OR ASTM A-653 GRADE 40 OR AISI 304 S.S. *	SEE DETAIL	REQ'D LENGTH = 2" FOR MULLION 12L Fy (MIN.) = 36 ksi
10L1	"Z" MULLION 12L CLAMP	ASTM A-36 OR ASTM A-653 GRADE 40 OR AISI 304 S.S. *	SEE DETAIL	8" LONG AT HEAD & SILL AT BLADE W/ MULLION 12L Fy (MIN.) = 36 ksi
10L2	ANGLE MULLION BRACKET	6063-T6 ALLOY	SEE DETAIL	8" LONG AT HEAD & SILL AT BLADE W/ MULLIONS. Fy (MIN.) = 25 ksi
11L	PERIMETER WELDED CHANNEL	6063-T5 ALLOY	SEE DETAIL	Fy (MIN.) = 16 ksi
12L	MULLION	6063-T5 ALLOY	SEE DETAIL	Fy (MIN.) = 16 ksi
14L	MULLION CONNECTOR TYPE 1 AT MULLION 12L	6063-T6 ALLOY	SEE DETAIL	Fy (MIN.) = 16 ksi
14L1	MULLION CONNECTOR TYPE 2 AT MULLION 12L	ASTM A-36 *	SEE DETAIL	Fy (MIN.) = 36 ksi
15L	BLANK-OFF PANEL	6063-T5 ALLOY	SEE DETAIL	Fy (MIN.) = 16 ksi
16L	BLANK-OFF PANEL	6063-T5 ALLOY	SEE DETAIL	Fy (MIN.) = 16 ksi
17L	REAR MESH	3003-H14 ALLOY	SEE DETAIL	Fy (MIN.) = 16 ksi

* NOTE: STEEL COMPONENTS SHALL BE PROTECTED FROM CORROSION W/ A PRIMER CONSISTING OF RED OXIDE PAINT OR SIMILAR W/ GALVANIZING (G-60) AS AN OPTION. ADDITIONALLY, FINAL (FINISH) PAINT FOR THESE PROFILES SHALL BE IN ACCORDANCE W/ SECTION 2003.8.4.2 OF THE F.B.C., ADDRESSING PROTECTION OF ALUMINUM IN CONTACT W/ METALS NOT CONSIDERED COMPATIBLE.

1/21/16

P.E. SEAL/SIGNATURE/DATE

TEXAS DEPARTMENT OF INSURANCE – 2006

WALTER A. TILLIT Jr P.E.
PROFESSIONAL ENGINEER
6355 N.W 36 STREET, STE. 305
VIRGINIA GARDENS, FL 33166
PHONE(305) 871-1530 FAX (305) 871-1531
TEXAS LIC. # 90691
FIRM REGISTRATION # F-13790

SED-5.1 LOUVER SYSTEM WITH OR WITHOUT CD-151 DAMPER ASSEMBLY

UNITED ENERTECH, INC.
3005 SOUTH HICKORY ST.
CHATTANOOGA, TN 37407
PHONE: (423)698-7715 FAX:(423)698-6629

REV. NO	DESCRIPTION	DATE	REV. No	DESCRIPTION	DATE
1	–	–	3	–	–
2	–	–	4	–	–

M.L.
DRAWN BY:

01/20/16
DATE:

16-005
DRAWING No.

SHEET 2 OF 16

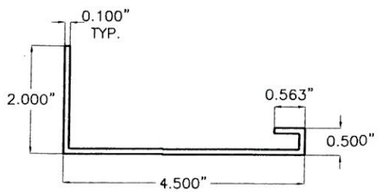

1D HEAD & SILL

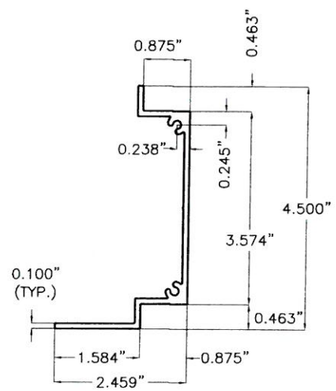

2D JAMB

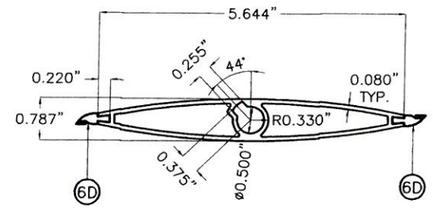

3D REGULAR DAMPER BLADE

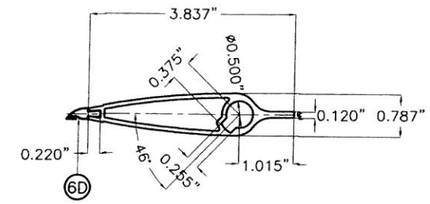

3D1 TOP DAMPER HALF BLADE

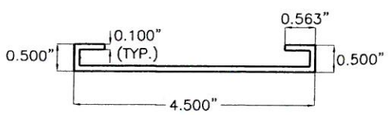

7D MID-HEIGHT HEAD or SILL

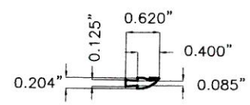

6D BLADE SEAL

BILL OF MATERIALS CD-151 DAMPER ASSEMBLY				
ITEM	DESCRIPTION	MATERIAL	SIZE	REMARKS
1D	EXTRUDED ALUM. HEAD & SILL	6063-T5 ALUMINUM ALLOY	SEE DETAIL	Fy(MIN.)=33.4 ksi
2D	EXTRUDED ALUM. JAMB	6063-T5 ALUMINUM ALLOY	SEE DETAIL	Fy(MIN.)=31.6 ksi
3D	EXTRUDED ALUM. REGULAR DAMPER BLADE.	6063-T5 ALUMINUM ALLOY	SEE DETAIL	Fy(MIN.)=31.8 ksi
3D1	EXTRUDED ALUM. TOP DAMPER HALF BLADE.	6063-T5 ALUMINUM ALLOY	SEE DETAIL	Fy(MIN.)=31.8 ksi
4D	BUSHING	BRONZE	1/2" I.D.(5/8" O.D.)x1/4"	0.059"THICK @ WASHER SIDE
5D	AXLE PIN	ZAMAC No. 3 ZINC	1/2"x3 1/8"	WITH NYLON WASHER & LOCK RING
6D	BLADE SEAL	SILICONE	SEE DETAIL	ASTM D-2000, 60-65 DUROMETER
7D	MID-HEIGHT EXTRUDED ALUM. HEAD or SILL	6063-T5 ALUMINUM ALLOY	SEE DETAIL	Fy(MIN.)=29.8 ksi
8D	ALUM. ANGLE BLADE STOP	6063-T5 ALUMINUM ALLOY	SEE DETAIL	WITH VINYL WEATHER STRIP AT END OF 3" LEG
9D	JAMB SEAL	STAINLESS STEEL 316 SERIES	SEE DETAIL	ATTACHED TO 2D W/(3) DOUBLE SIDED (1"x1/8") TAPES
10D	S.D.S. TEK SCREW	ZINC PLATED	#8 X 1/2"	FASTEN TO 8D @ 12" O.C., 2 1/2" FROM ENDS
1I	INTERMEDIATE TUBE FRAME	6063-T5 ALUMINUM ALLOY	SEE DETAIL IN THIS SHEET AND SHEET 9.	Fy(MIN.)=31.9 ksi INSTALL BETWEEN DAMPER & LOUVER FRAME.

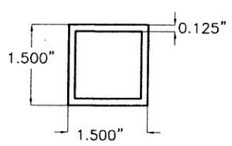

1I INTERMEDIATE TUBE FRAME

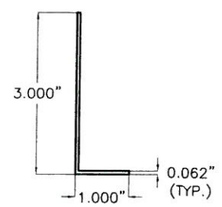

8D ALUM. ANGLE BLADE STOP

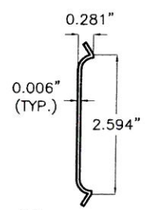

9D JAMB SEAL

CD-151 DAMPER AND INTERMEDIATE TUBE FRAME COMPONENTS

(EXCLUDES COMPONENTS FOR OPERATIVE MECHANISM, SEE NOTE 8/1)

COMPONENTS

SCALE: 3/8"=1"

1/21/16

P.E. SEAL/SIGNATURE/DATE

TEXAS DEPARTMENT OF INSURANCE – 2006

WALTER A. TILLIT Jr P.E.
PROFESSIONAL ENGINEER
6355 N.W 36 STREET, STE. 305
VIRGINIA GARDENS, FL 33166
PHONE(305) 871-1530 FAX (305) 871-1531
TEXAS LIC. # 90691
FIRM REGISTRATION # F-13790

SED-5.1 LOUVER SYSTEM WITH OR WITHOUT CD-151 DAMPER ASSEMBLY

UNITED ENERTECH, INC.
3005 SOUTH HICKORY ST.
CHATTANOOGA, TN 37407
PHONE: (423)698-7715 FAX:(423)698-6629

REV. NO	DESCRIPTION	DATE	REV. No	DESCRIPTION	DATE
1	–	–	3	–	–
2	–	–	4	–	–

M.L.
DRAWN BY:

01/20/16
DATE:

16-005
DRAWING No.

SHEET 3 OF 16

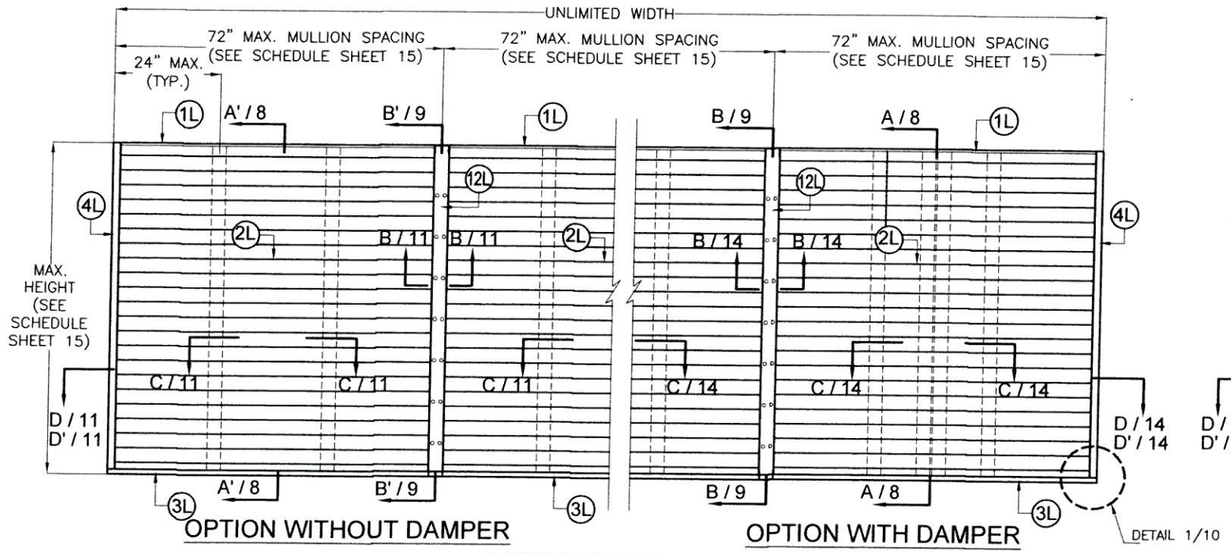

EXTERIOR ELEVATION

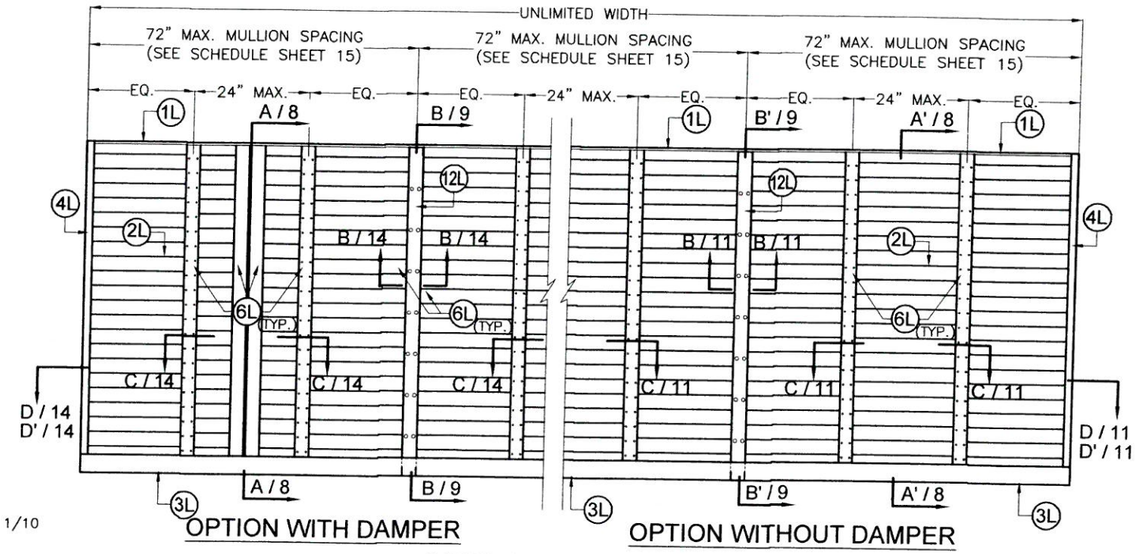

INTERIOR ELEVATION

MULTIPLE SED 5.1 LOUVER UNITS WITH OR WITHOUT DAMPER WITH MULLION 12L

N.T.S

(PRESURE RATING VARIES, SEE SCHEDULE ON SHEET 15)

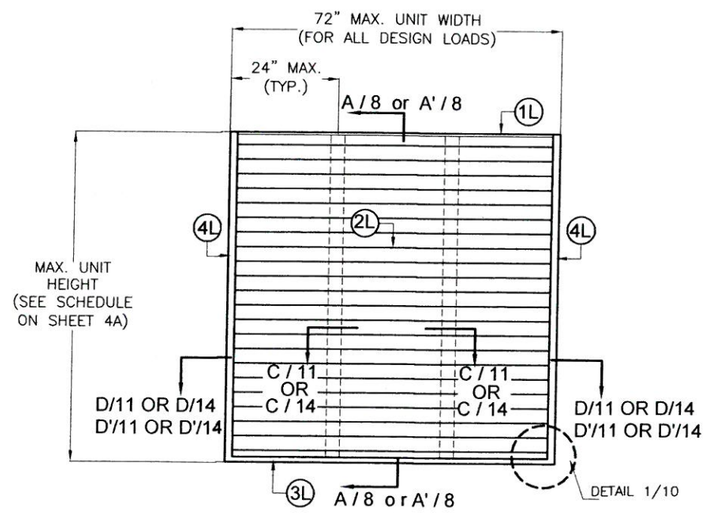

EXTERIOR ELEVATION
WITH OR WITHOUT DAMPER

PRESURE RATING: (VARIES SEE SCHEDULE)

SINGLE SED 5.1 LOUVER UNITS WITH OR WITHOUT DAMPER W/ SQUARE EDGES

N.T.S

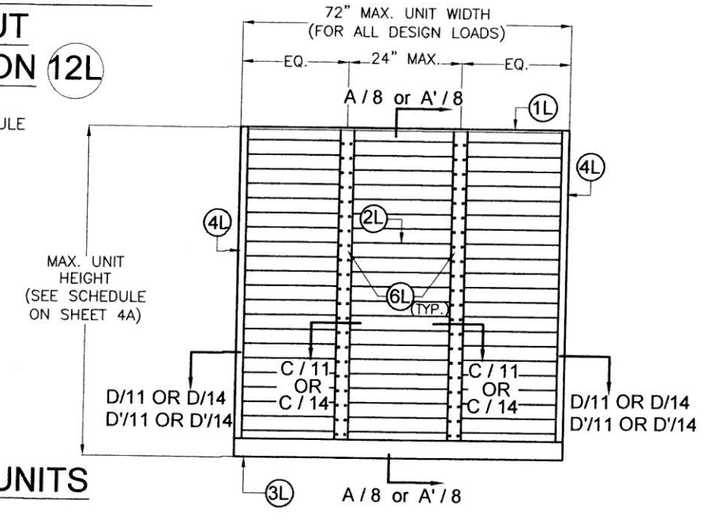

INTERIOR ELEVATION
WITH OR WITHOUT DAMPER

PRESURE RATING: (VARIES SEE SCHEDULE)

1/21/16

P.E. SEAL/SIGNATURE/DATE

WALTER A. TILLIT Jr P.E.
PROFESSIONAL ENGINEER
6355 N.W 36 STREET, STE. 305
VIRGINIA GARDENS, FL 33166
PHONE(305) 871-1530 FAX (305) 871-1531
TEXAS LIC. # 90691
FIRM REGISTRATION # F-13790

TEXAS DEPARTMENT OF INSURANCE – 2006

SED-5.1 LOUVER SYSTEM WITH OR WITHOUT CD-151 DAMPER ASSEMBLY

UNITED ENERTECH, INC.
3005 SOUTH HICKORY ST.
CHATTANOOGA, TN 37407
PHONE: (423)698-7715 FAX:(423)698-6629

REV. NO	DESCRIPTION	DATE	REV. No	DESCRIPTION	DATE
1	–	–	3	–	–
2	–	–	4	–	–

M.L.
DRAWN BY:

01/20/16
DATE:

16-005
DRAWING No.

SHEET 4 OF 16

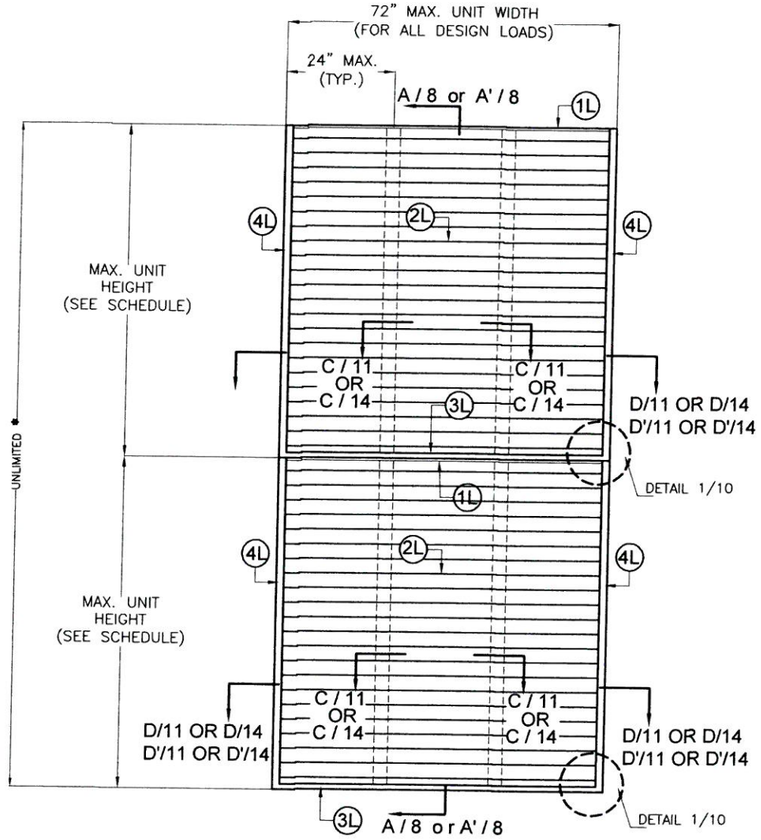

EXTERIOR ELEVATION
WITH OR WITHOUT DAMPER

PRESURE RATING: (VARIES SEE SCHEDULE)

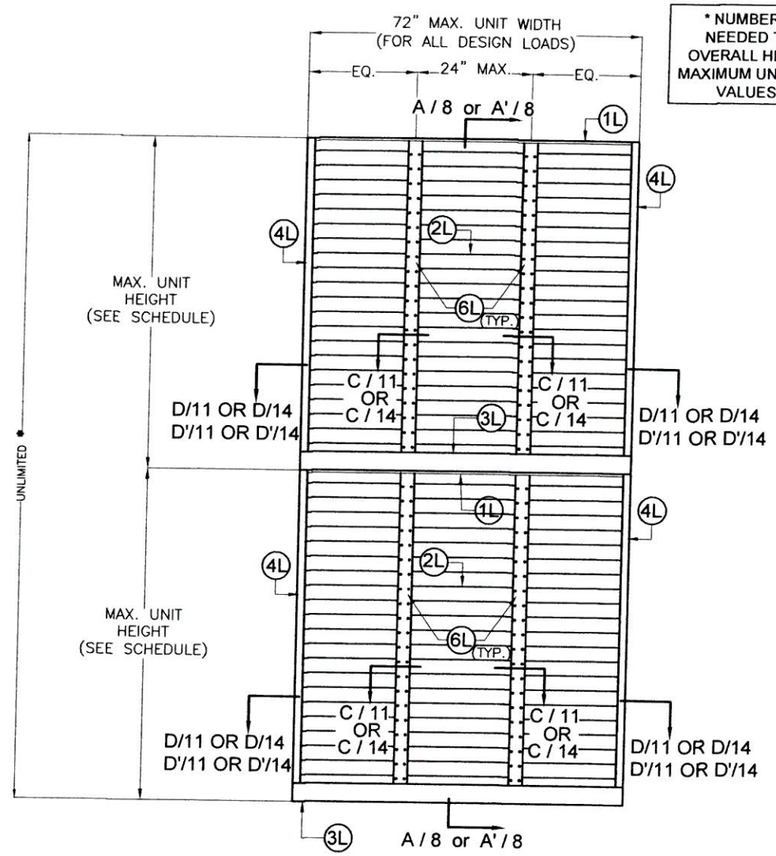

INTERIOR ELEVATION
WITH OR WITHOUT DAMPER

PRESURE RATING: (VARIES SEE SCHEDULE)

* NUMBER OF LOUVER PANEL UNITS NEEDED TO ACHIEVE THE OPENING OVERALL HEIGHT MAY VARY. HOWEVER MAXIMUM UNIT HEIGHT SHALL NO EXCEED VALUES, SHOWN ON SCHEDULE.

MAX. UNIT HEIGHT FOR A GIVEN DESIGN PRESSURE RATING SCHEDULE, APPLICABLE TO SINGLE UNITS W/ SQUARE EDGES W/O MULLION

MAXIMUM DESIGN PRESSURE RATING (p.s.f)	MAX. UNIT HEIGHT
40	10'–0"
45	10'–0"
50	10'–0"
55	10'–0"
60	10'–0"
65	10'–0"
70	10'–0"
75	9'–11"
80	9'–7"
85	9'–4"
90	9'–0"
95	8'–10"
100	8'–7"
105	8'–4"
110	8'–2"
115	7'–12"
120	7'–10"
125	7'–8"
130	7'–6"
135	7'–5"
140	7'–3"
145	7'–1"
150	7'–0"

SINGLE SED 5.1 LOUVER UNITS WITH OR WITHOUT DAMPER W/ SQUARE EDGES

N.T.S

1/20/16

P.E. SEAL/SIGNATURE/DATE

TEXAS DEPARTMENT OF INSURANCE – 2006

WALTER A. TILLIT Jr P.E.
PROFESSIONAL ENGINEER
6355 N.W 36 STREET, STE. 305
VIRGINIA GARDENS, FL 33166
PHONE(305) 871–1530 FAX (305) 871–1531
TEXAS LIC. # 90691
FIRM REGISTRATION # F–13790

SED–5.1 LOUVER SYSTEM WITH OR WITHOUT CD–151 DAMPER ASSEMBLY

UNITED ENERTECH, INC.
3005 SOUTH HICKORY ST.
CHATTANOOGA, TN 37407
PHONE: (423)698–7715 FAX:(423)698–6629

REV. NO	DESCRIPTION	DATE	REV. No	DESCRIPTION	DATE
1	–	–	3	–	–
2	–	–	4	–	–

M.L.
DRAWN BY:

01/20/16
DATE:

16–005
DRAWING No.

SHEET 4A OF 16

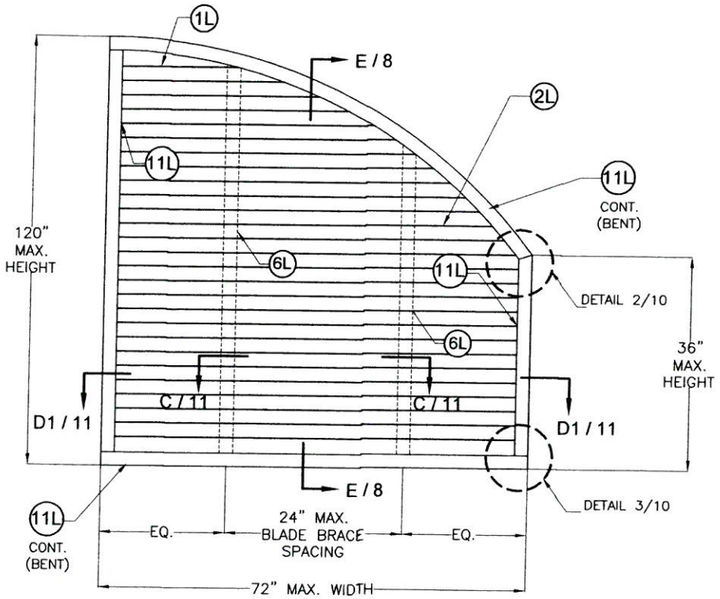

EXTERIOR ELEVATION

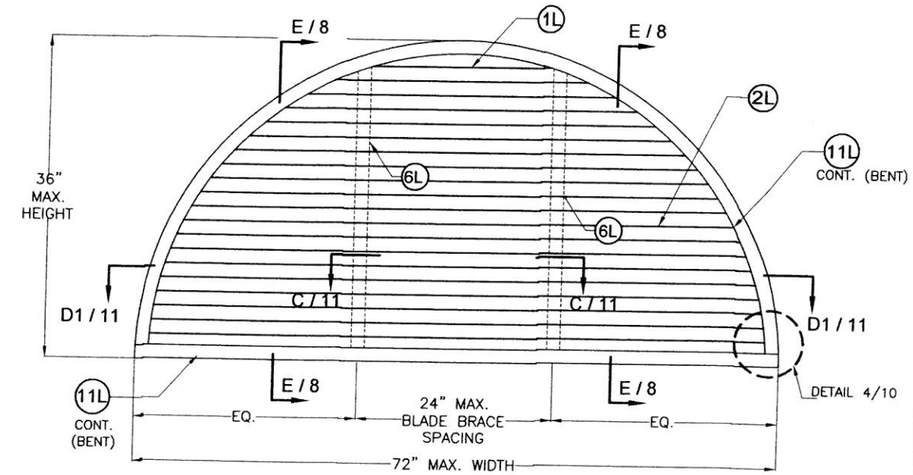

EXTERIOR ELEVATION

QUALIFIES THE FOLLOWING SHAPES:

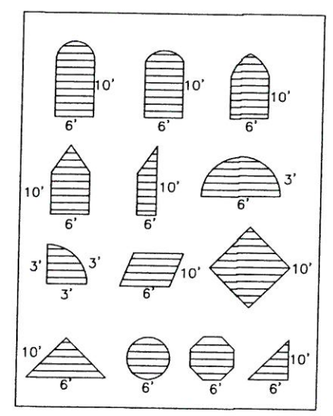

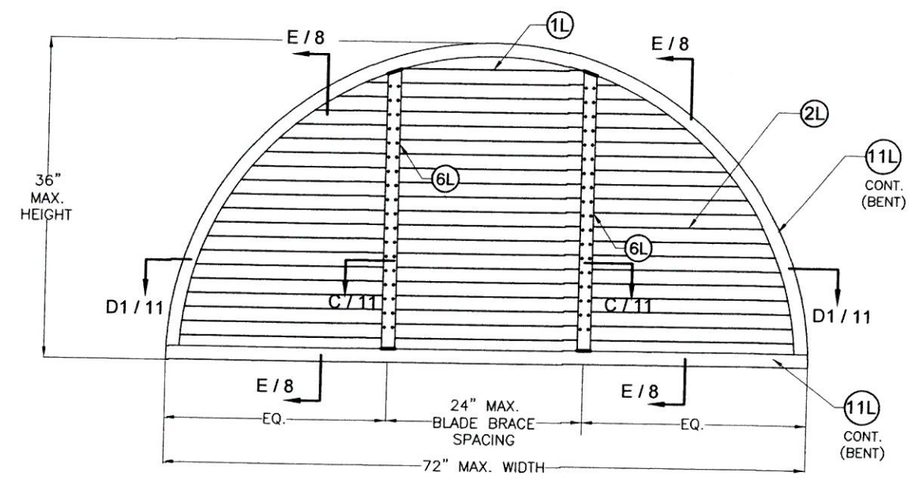

INTERIOR ELEVATION

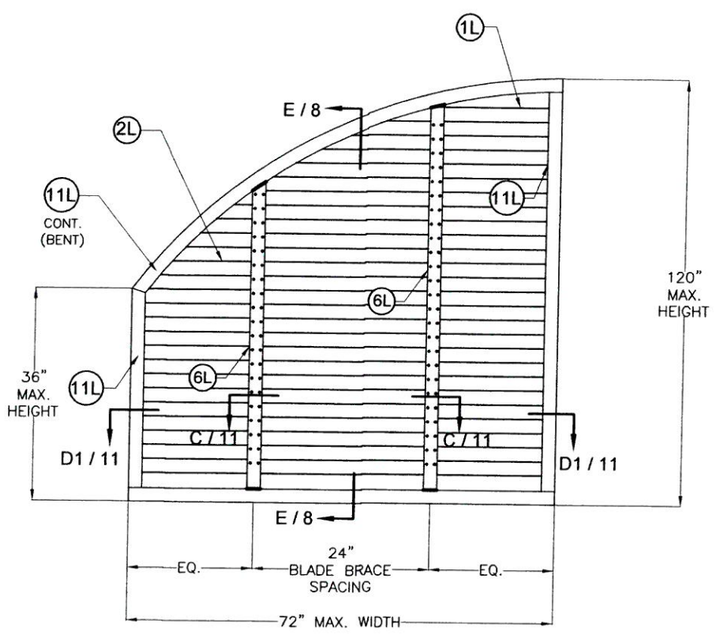

INTERIOR ELEVATION

SINGLE SED 5.1 LOUVER UNITS WITHOUT DAMPER W/ CURVED EDGES

N.T.S

(DESIGN PRESSURE RATING: +150, −150 PSF)

1/26/16

P.E. SEAL/SIGNATURE/DATE

TEXAS DEPARTMENT OF INSURANCE – 2006

WALTER A. TILLIT Jr P.E.
PROFESSIONAL ENGINEER
6355 N.W 36 STREET, STE. 305
VIRGINIA GARDENS, FL 33166
PHONE(305) 871-1530 FAX (305) 871-1531
TEXAS LIC. # 90691
FIRM REGISTRATION # F-13790

SED-5.1 LOUVER SYSTEM WITH OR WITHOUT CD-151 DAMPER ASSEMBLY

UNITED ENERTECH, INC.
3005 SOUTH HICKORY ST.
CHATTANOOGA, TN 37407
PHONE: (423)698-7715 FAX:(423)698-6629

REV. NO	DESCRIPTION	DATE	REV. No	DESCRIPTION	DATE
1	–	–	3	–	–
2	–	–	4	–	–

M.L.
DRAWN BY:

01/20/16
DATE:

16-005
DRAWING No.

SHEET 5 OF 16

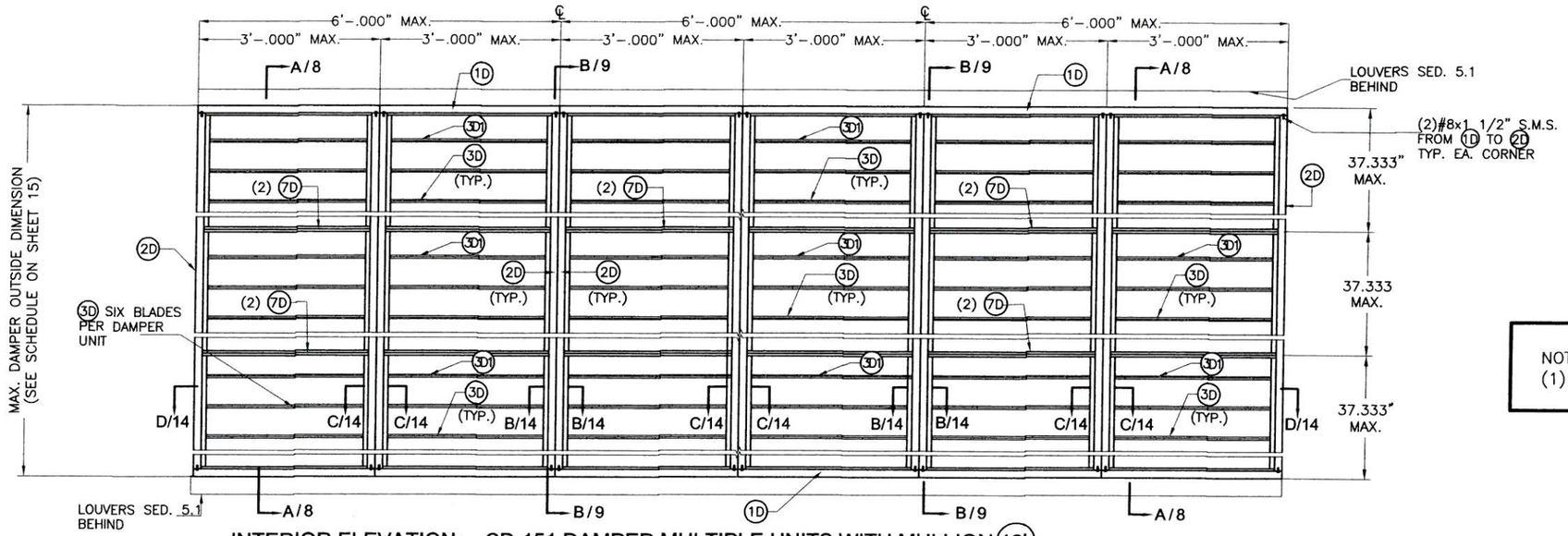

NOTE:
(1) SEE COMPONENTS ON SHEET 3.

INTERIOR ELEVATION: CD-151 DAMPER MULTIPLE UNITS WITH MULLION 12L

SCALE: 1/2"=1'-0"

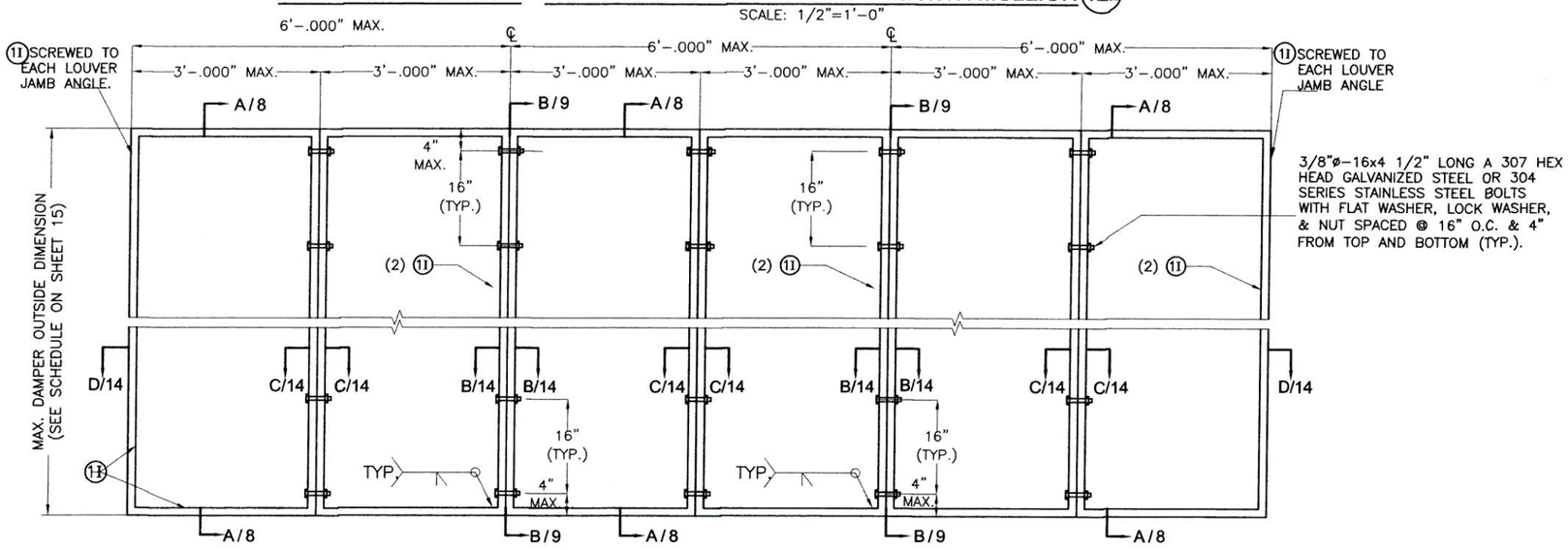

EXTERIOR ELEVATION: INTERMEDIATE TUBE FRAME FOR CD-151 DAMPER ATTACHMENT AT MULTIPLE UNITS WITH MULLION 12L

SCALE: 1/2"=1'-0"

1/21/16

P.E. SEAL/SIGNATURE/DATE

TEXAS DEPARTMENT OF INSURANCE – 2006

WALTER A. TILLIT Jr P.E.
PROFESSIONAL ENGINEER
6355 N.W 36 STREET, STE. 305
VIRGINIA GARDENS, FL 33166
PHONE(305) 871-1530 FAX (305) 871-1531
TEXAS LIC. # 90691
FIRM REGISTRATION # F-13790

SED-5.1 LOUVER SYSTEM WITH OR WITHOUT CD-151 DAMPER ASSEMBLY

UNITED ENERTECH, INC.
3005 SOUTH HICKORY ST.
CHATTANOOGA, TN 37407
PHONE: (423)698-7715 FAX:(423)698-6629

REV. NO	DESCRIPTION	DATE	REV. No	DESCRIPTION	DATE
1	–	–	3	–	–
2	–	–	4	–	–

M.L.
DRAWN BY:

01/20/16
DATE:

16-005
DRAWING No.

SHEET 6 OF 16

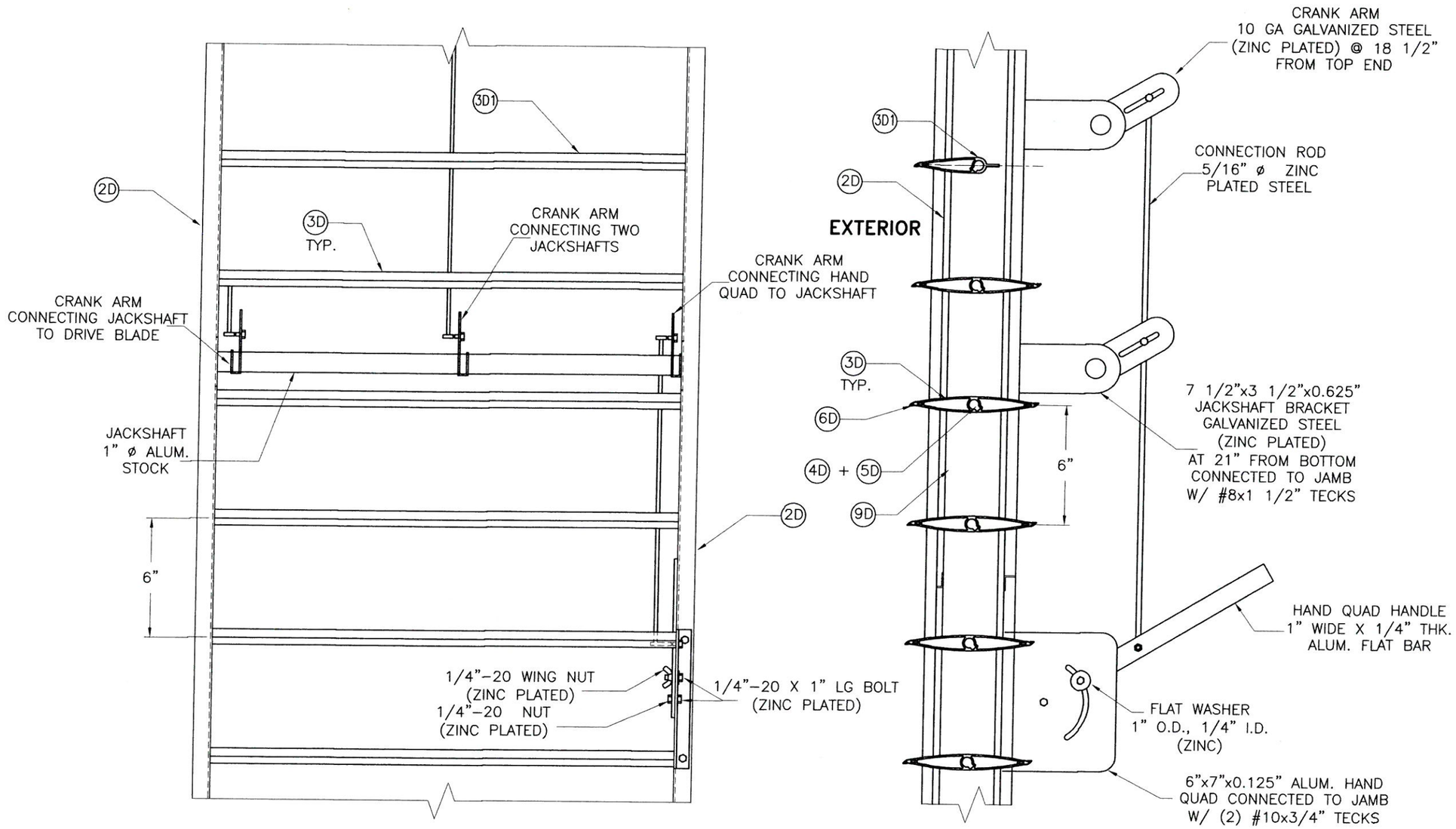

HAND QUADRANT HANDLE MECHANISM

N.T.S.

1/21/16

P.E. SEAL/SIGNATURE/DATE

TEXAS DEPARTMENT OF INSURANCE – 2006

WALTER A. TILLIT Jr P.E.
PROFESSIONAL ENGINEER
6355 N.W 36 STREET, STE. 305
VIRGINIA GARDENS, FL 33166
PHONE(305) 871-1530 FAX (305) 871-1531
TEXAS LIC. # 90691
FIRM REGISTRATION # F-13790

SED-5.1 LOUVER SYSTEM WITH OR WITHOUT CD-151 DAMPER ASSEMBLY

UNITED ENERTECH, INC.
3005 SOUTH HICKORY ST.
CHATTANOOGA, TN 37407
PHONE: (423)698-7715 FAX:(423)698-6629

REV. NO	DESCRIPTION	DATE	REV. No	DESCRIPTION	DATE
1	–	–	3	–	–
2	–	–	4	–	–

M.L.
DRAWN BY:

01/20/16
DATE:

16-005
DRAWING No.

SHEET 7 OF 16

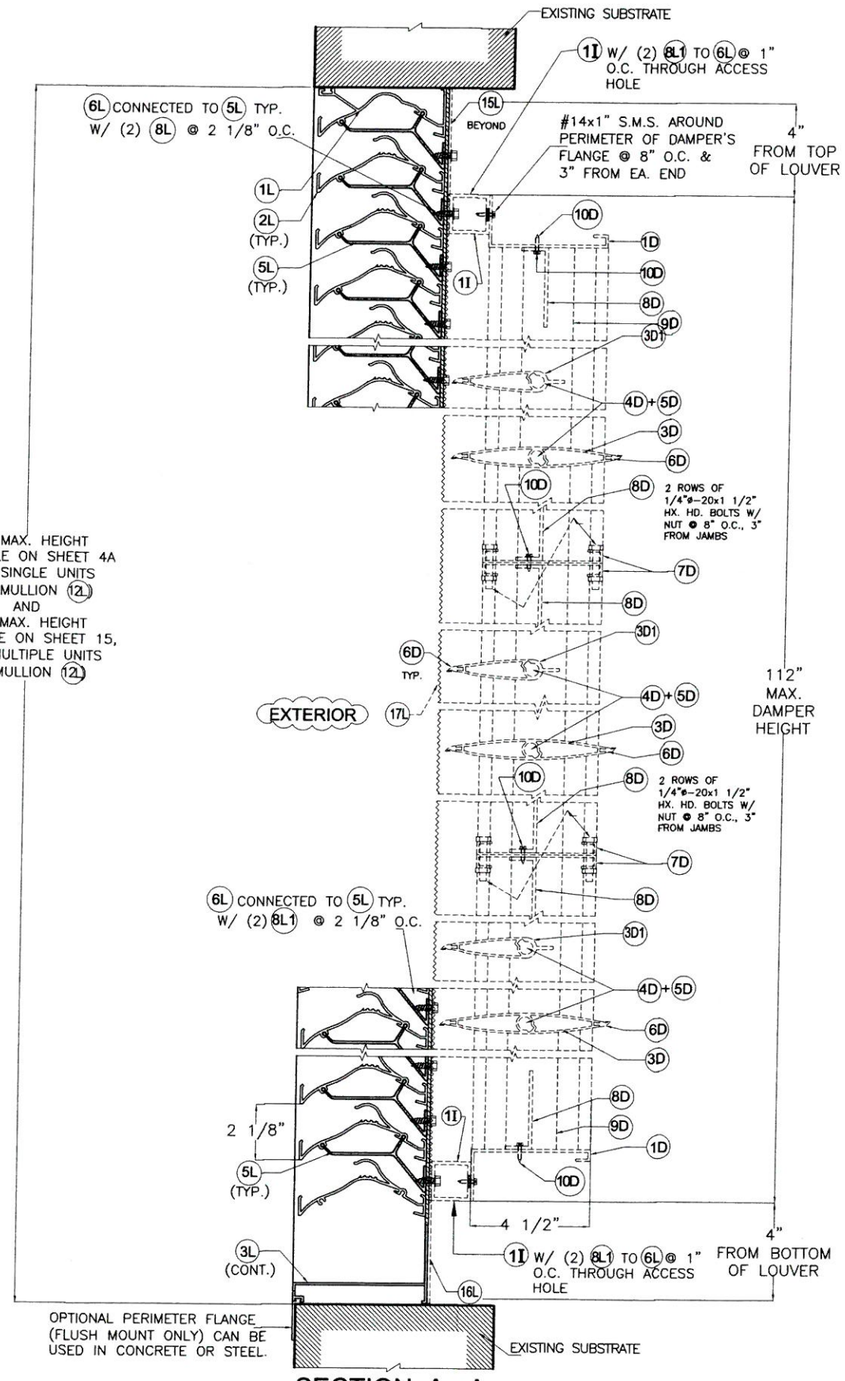

SECTION A - A

SCALE: 3/16"=1"

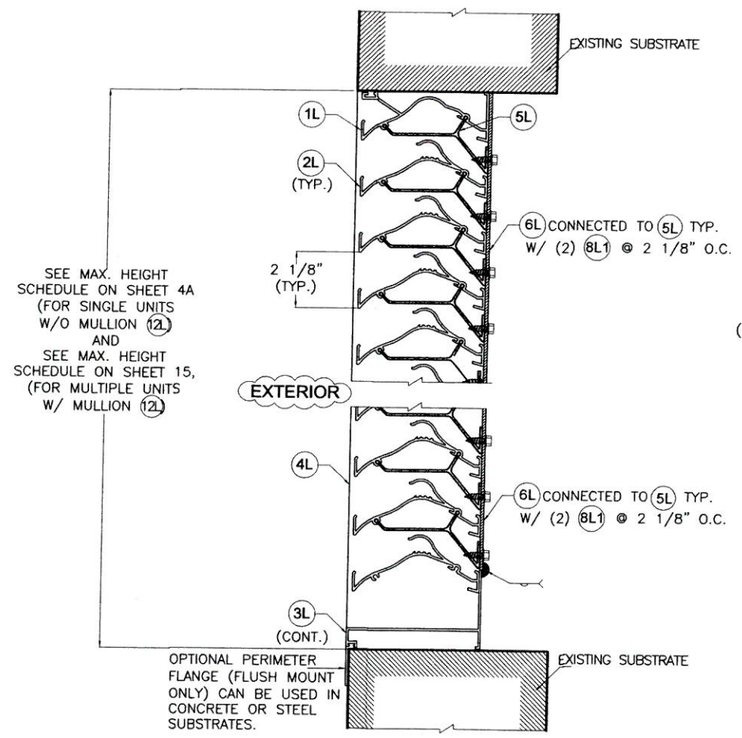

SECTION A' - A'

SCALE: 3/16"=1"

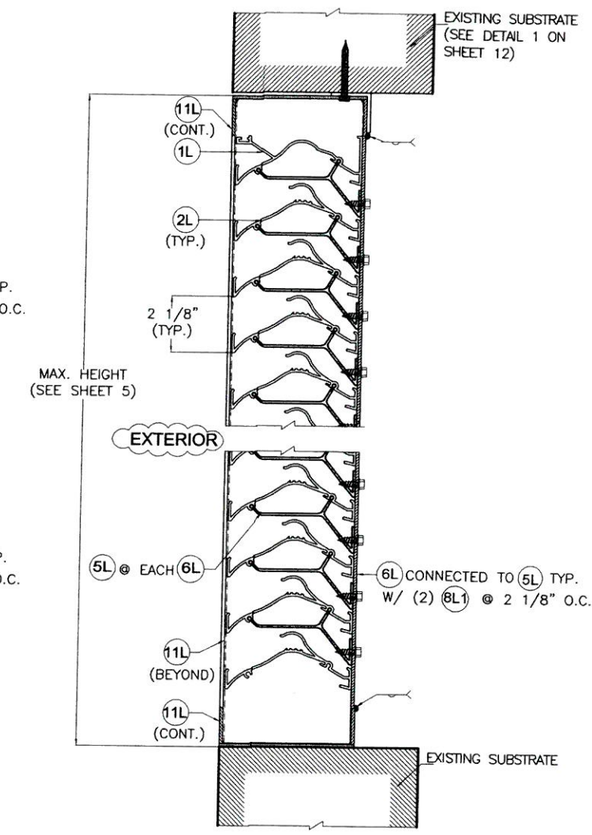

SECTION E - E

SCALE: 3/16"=1"

1/21/16

P.E. SEAL/SIGNATURE/DATE

TEXAS DEPARTMENT OF INSURANCE – 2006

WALTER A. TILLIT Jr P.E.
PROFESSIONAL ENGINEER
6355 N.W 36 STREET, STE. 305
VIRGINIA GARDENS, FL 33166
PHONE(305) 871-1530 FAX (305) 871-1531
TEXAS LIC. # 90691
FIRM REGISTRATION # F-13790

SED-5.1 LOUVER SYSTEM WITH OR WITHOUT CD-151 DAMPER ASSEMBLY

UNITED ENERTECH, INC.
3005 SOUTH HICKORY ST.
CHATTANOOGA, TN 37407
PHONE: (423)698-7715 FAX:(423)698-6629

REV. NO	DESCRIPTION	DATE	REV. No	DESCRIPTION	DATE
1	–	–	3	–	–
2	–	–	4	–	–

M.L.
DRAWN BY:

01/20/16
DATE:

16-005
DRAWING No.

SHEET 8 OF 16

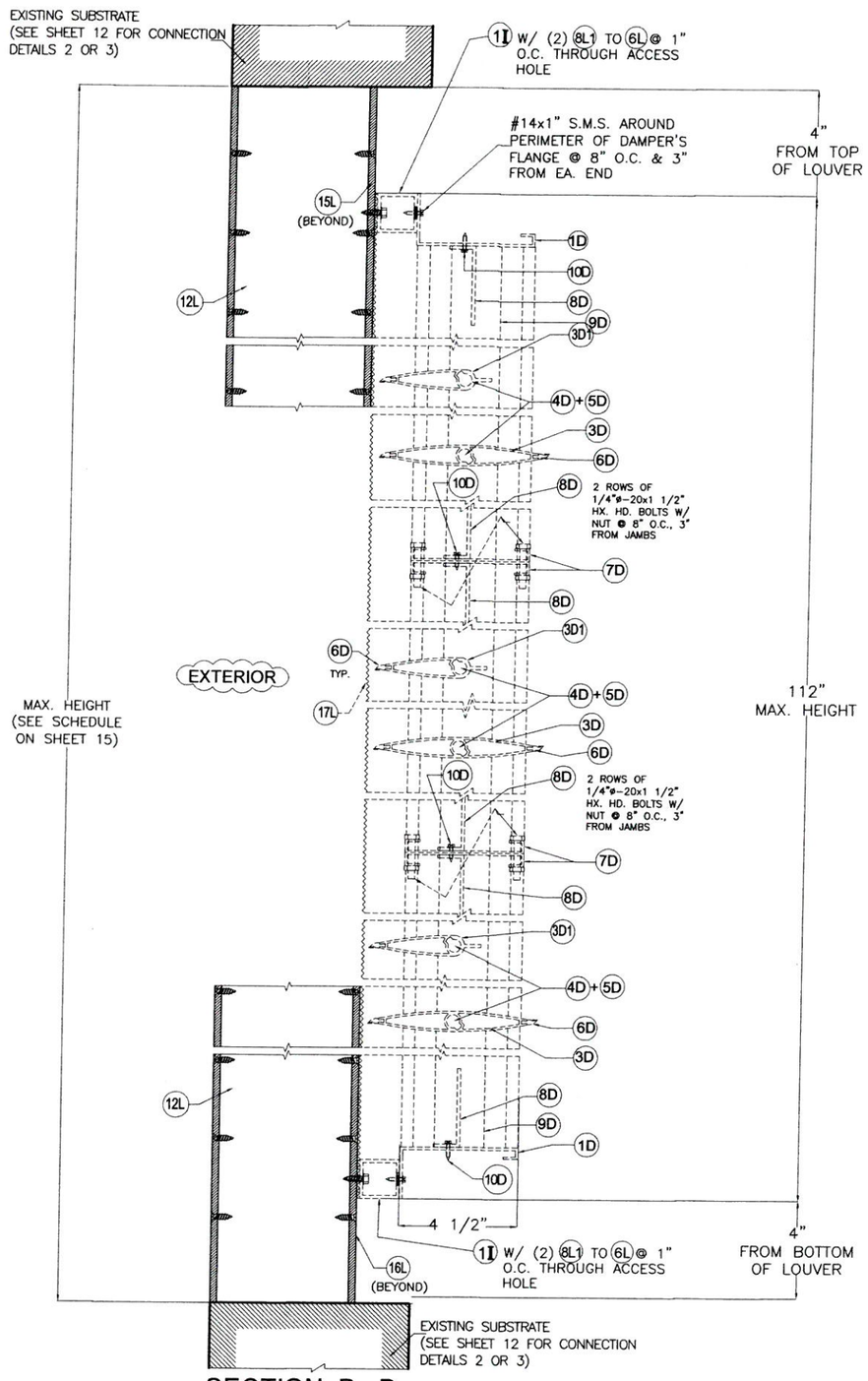

SECTION B - B

SCALE: 3/16"=1"
(DAMPER BEYOND)

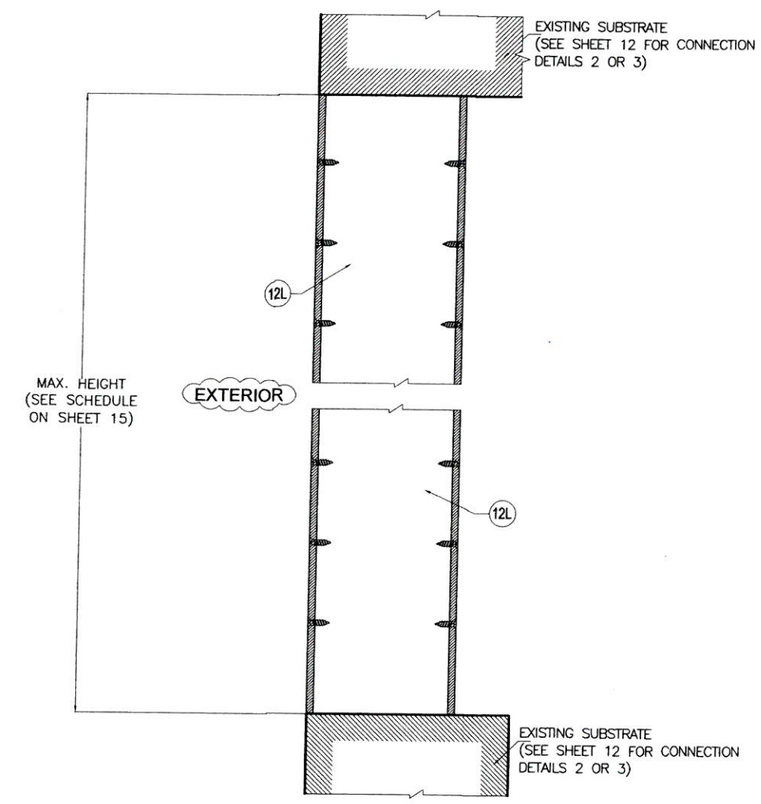

SECTION B' - B'

SCALE: 3/16"=1"

1/21/16

P.E. SEAL/SIGNATURE/DATE

TEXAS DEPARTMENT OF INSURANCE – 2006

WALTER A. TILLIT Jr P.E.
PROFESSIONAL ENGINEER
6355 N.W 36 STREET, STE. 305
VIRGINIA GARDENS, FL 33166
PHONE(305) 871-1530 FAX (305) 871-1531
TEXAS LIC. # 90691
FIRM REGISTRATION # F-13790

SED-5.1 LOUVER SYSTEM WITH OR WITHOUT CD-151 DAMPER ASSEMBLY

UNITED ENERTECH, INC.
3005 SOUTH HICKORY ST.
CHATTANOOGA, TN 37407
PHONE: (423)698-7715 FAX:(423)698-6629

REV. NO	DESCRIPTION	DATE	REV. No	DESCRIPTION	DATE
1	–	–	3	–	–
2	–	–	4	–	–

M.L.
DRAWN BY:

01/20/16
DATE:

16-005
DRAWING No.

SHEET 9 OF 16

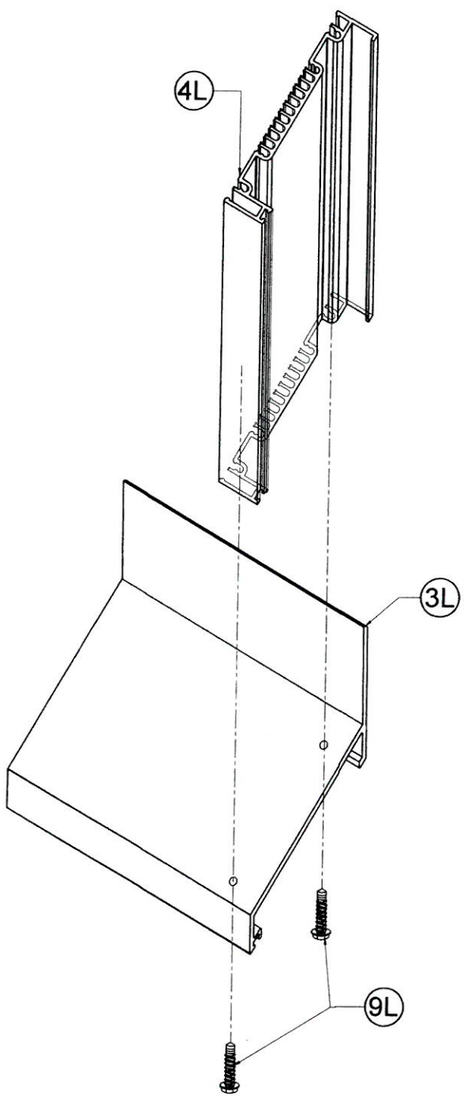

DETAIL 1
CORNER AT BOTTOM
N.T.S

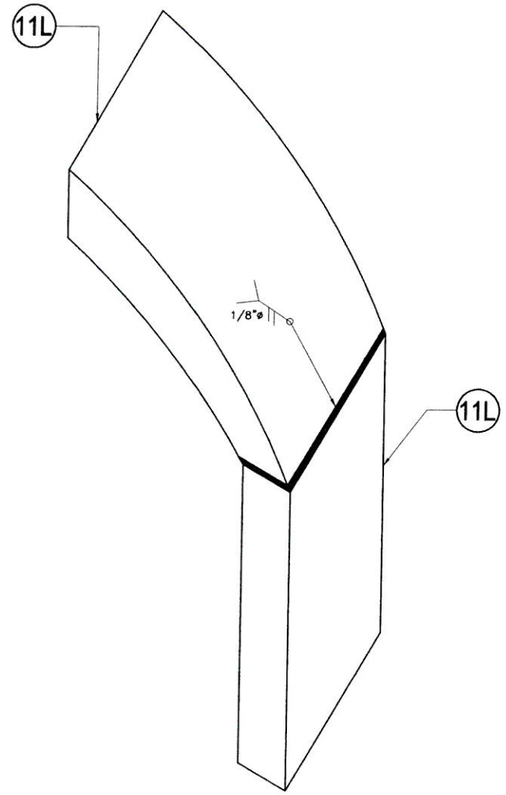

DETAIL 2
CORNER AT TOP
N.T.S

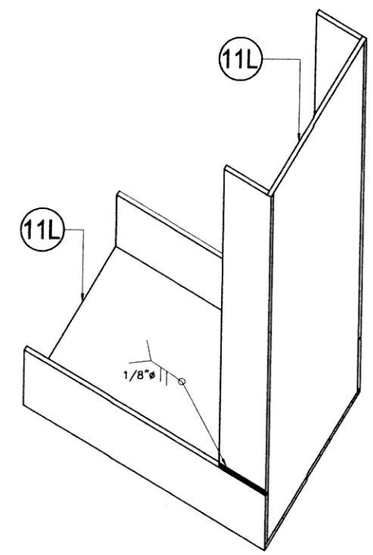

DETAIL 3
CORNER AT BOTTOM
N.T.S

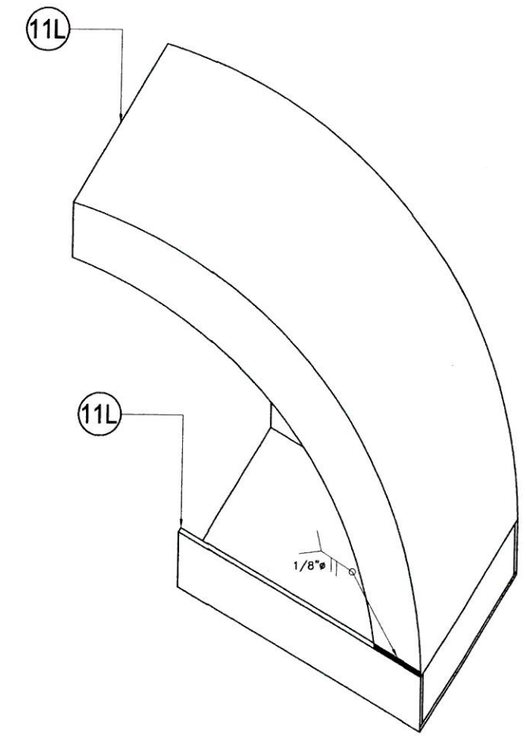

DETAIL 4
CORNER AT BOTTOM
N.T.S

1/24/16

P.E. SEAL/SIGNATURE/DATE

TEXAS DEPARTMENT OF INSURANCE – 2006

WALTER A. TILLIT Jr P.E.
PROFESSIONAL ENGINEER
6355 N.W 36 STREET, STE. 305
VIRGINIA GARDENS, FL 33166
PHONE(305) 871-1530 FAX (305) 871-1531
TEXAS LIC. # 90691
FIRM REGISTRATION # F-13790

SED-5.1 LOUVER SYSTEM WITH OR WITHOUT CD-151 DAMPER ASSEMBLY

UNITED ENERTECH, INC.
3005 SOUTH HICKORY ST.
CHATTANOOGA, TN 37407
PHONE: (423)698-7715 FAX:(423)698-6629

REV. NO	DESCRIPTION	DATE	REV. No	DESCRIPTION	DATE
1	–	–	3	–	–
2	–	–	4	–	–

M.L.
DRAWN BY:

01/20/16
DATE:

16-005
DRAWING No.

SHEET 10 OF 16

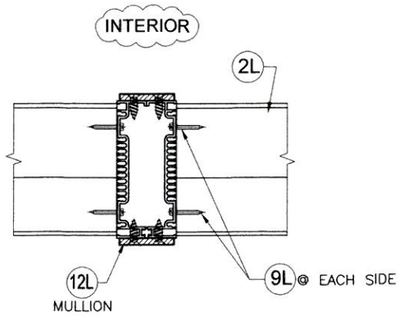

SECTION B-B
@ 12L

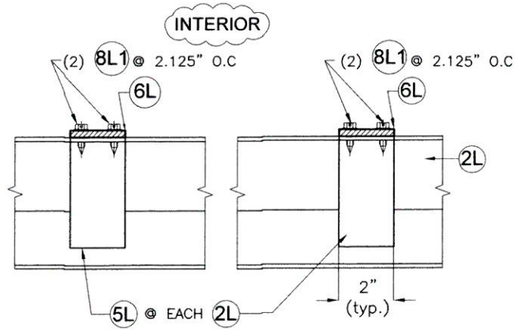

SECTION C-C

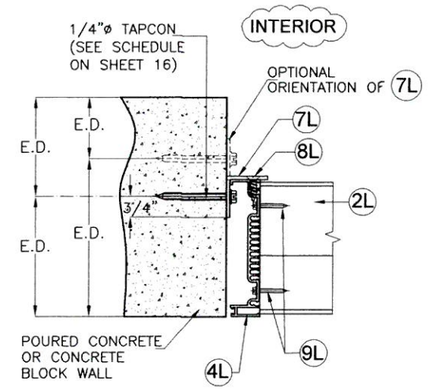

SECTION D-D
CONCRETE BLOCK

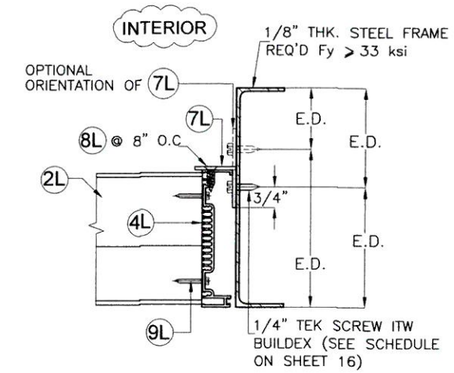

SECTION D-D
STEEL

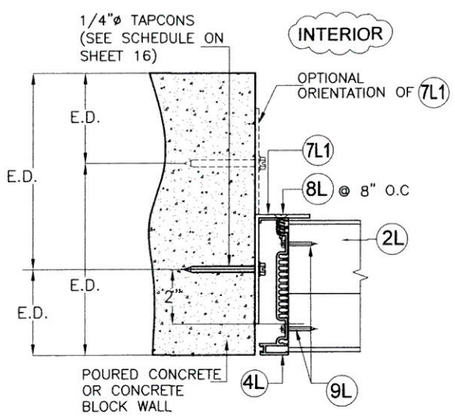

SECTION D'-D'
CONCRETE BLOCK

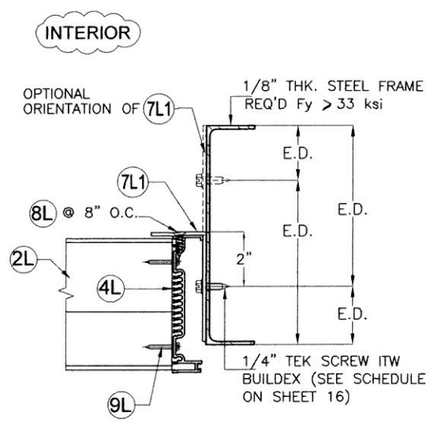

SECTION D'-D'
STEEL

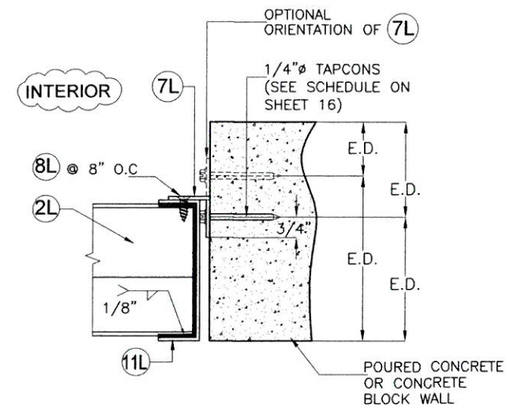

SECTION D1-D1
CONCRETE BLOCK

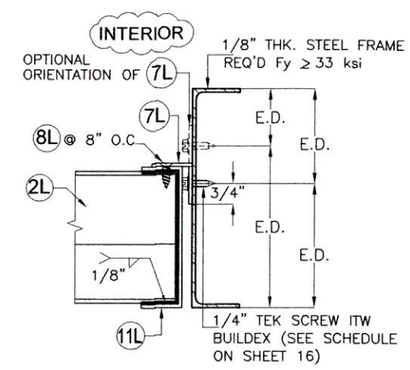

SECTION D1-D1
STEEL

CONNECTION DETAILS

SCALE: 3/16"=1"

1/21/16

P.E. SEAL/SIGNATURE/DATE

TEXAS DEPARTMENT OF INSURANCE – 2006

WALTER A. TILLIT Jr P.E.
PROFESSIONAL ENGINEER
6355 N.W 36 STREET, STE. 305
VIRGINIA GARDENS, FL 33166
PHONE(305) 871-1530 FAX (305) 871-1531
TEXAS LIC. # 90691
FIRM REGISTRATION # F-13790

SED-5.1 LOUVER SYSTEM WITH OR WITHOUT CD-151 DAMPER ASSEMBLY

UNITED ENERTECH, INC.
3005 SOUTH HICKORY ST.
CHATTANOOGA, TN 37407
PHONE: (423)698-7715 FAX:(423)698-6629

REV. NO	DESCRIPTION	DATE	REV. No	DESCRIPTION	DATE
1	–	–	3	–	–
2	–	–	4	–	–

M.L.
DRAWN BY:

01/20/16
DATE:

16-005
DRAWING No.

SHEET 11 OF 16

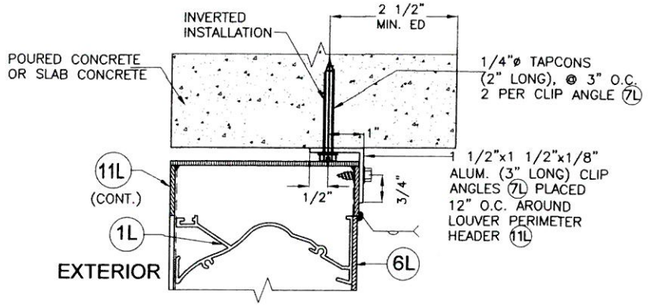

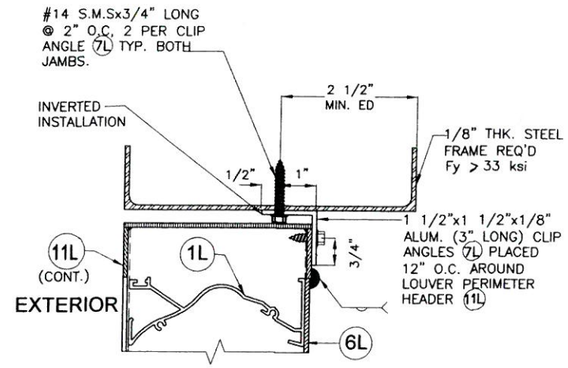

DETAIL - 1

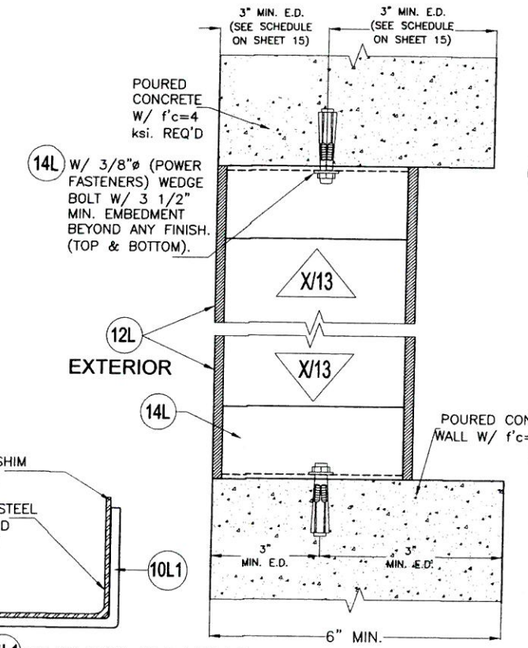

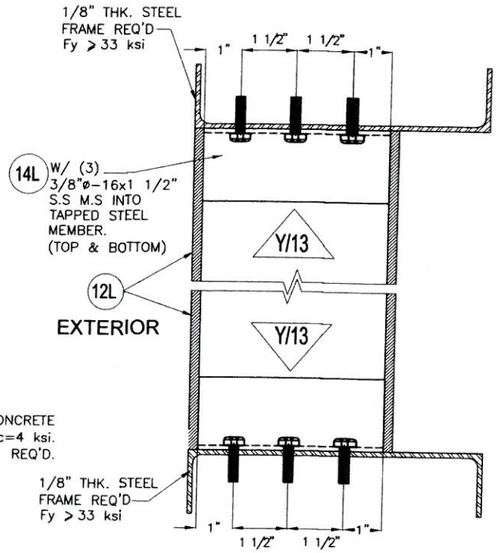

DETAIL - 2

(SEE SHEET 15 FOR MAX. MULLION HEIGHT SCHEDULE GIVEN A MULLION SPACING AND DESIGN PRESSURE RATING FOR APPLICABILITY OF THIS DETAIL)

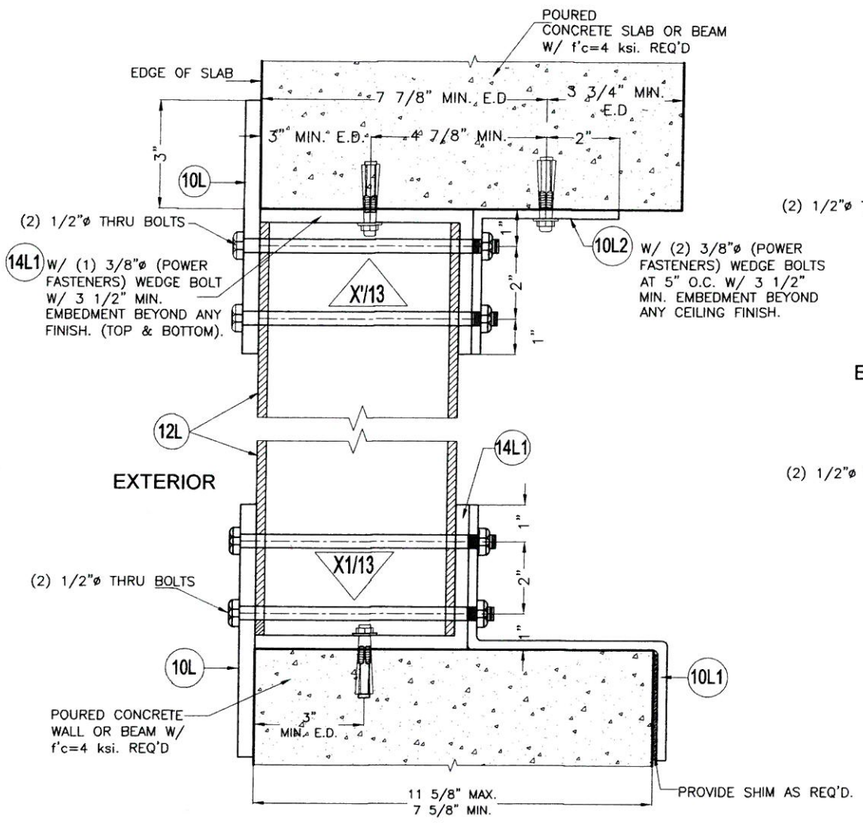

NOTE: TOP & BOTTOM MOUNTINGS MAY BE INTERCHANGEABLE

DETAIL - 3

(SEE SHEET 15 FOR MAX. MULLION HEIGHT SCHEDULE GIVEN A MULLION SPACING AND DESIGN PRESSURE RATING FOR APPLICABILITY OF THIS DETAIL)

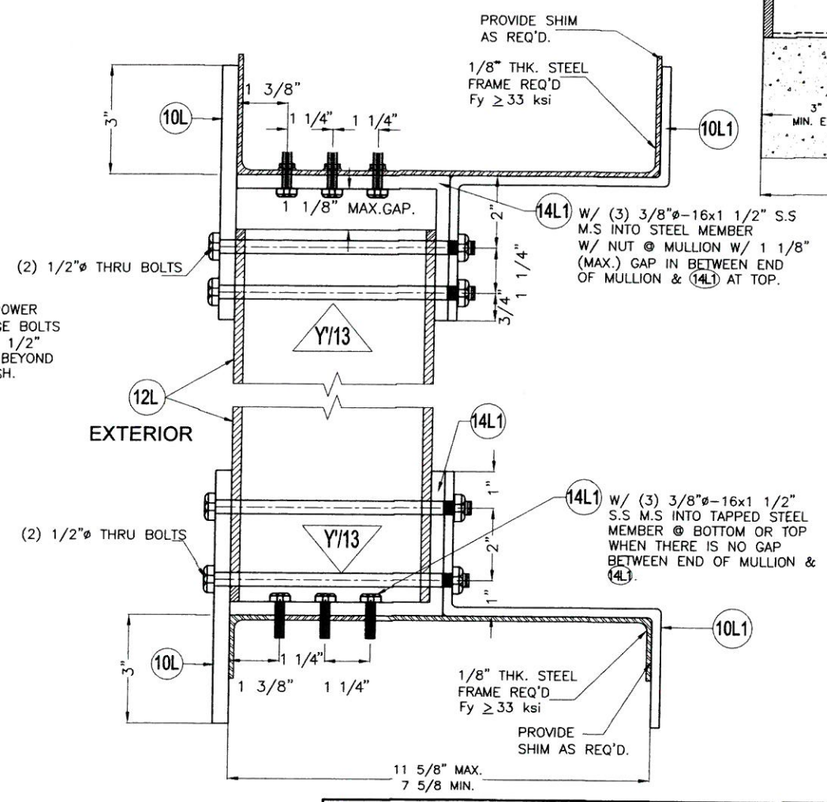

CONNECTION DETAILS

SCALE: 1/4"=1"

1/21/16

P.E. SEAL/SIGNATURE/DATE

TEXAS DEPARTMENT OF INSURANCE – 2006

WALTER A. TILLIT Jr P.E.
PROFESSIONAL ENGINEER
6355 N.W 36 STREET, STE. 305
VIRGINIA GARDENS, FL 33166
PHONE(305) 871-1530 FAX (305) 871-1531
TEXAS LIC. # 90691
FIRM REGISTRATION # F-13790

SED-5.1 LOUVER SYSTEM WITH OR WITHOUT CD-151 DAMPER ASSEMBLY

UNITED ENERTECH, INC.
3005 SOUTH HICKORY ST.
CHATTANOOGA, TN 37407
PHONE: (423)698-7715 FAX:(423)698-6629

REV. NO	DESCRIPTION	DATE	REV. No	DESCRIPTION	DATE
1	–	–	3	–	–
2	–	–	4	–	–

M.L.
DRAWN BY:

01/20/16
DATE:

16-005
DRAWING No.

SHEET 12 OF 16

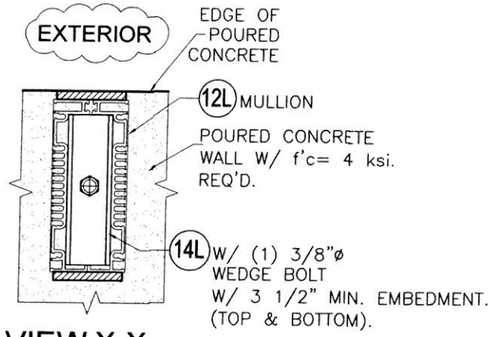

VIEW X-X
CONCRETE
SCALE: 1/4"=1"

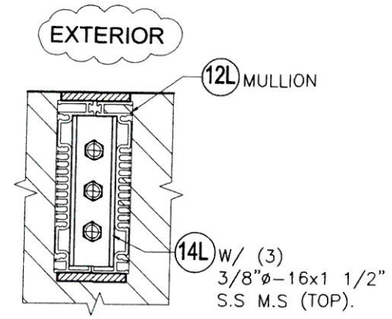

VIEW Y-Y
STEEL
SCALE: 1/4"=1"

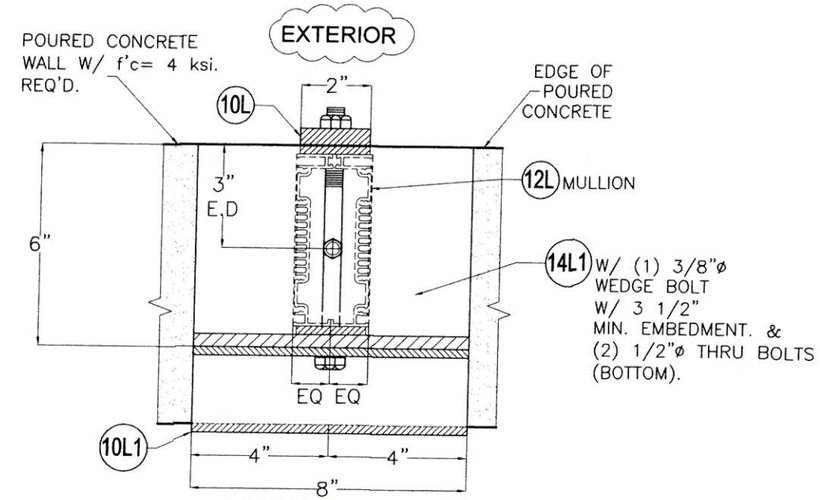

VIEW X1-X1
CONCRETE
SCALE: 1/4"=1"

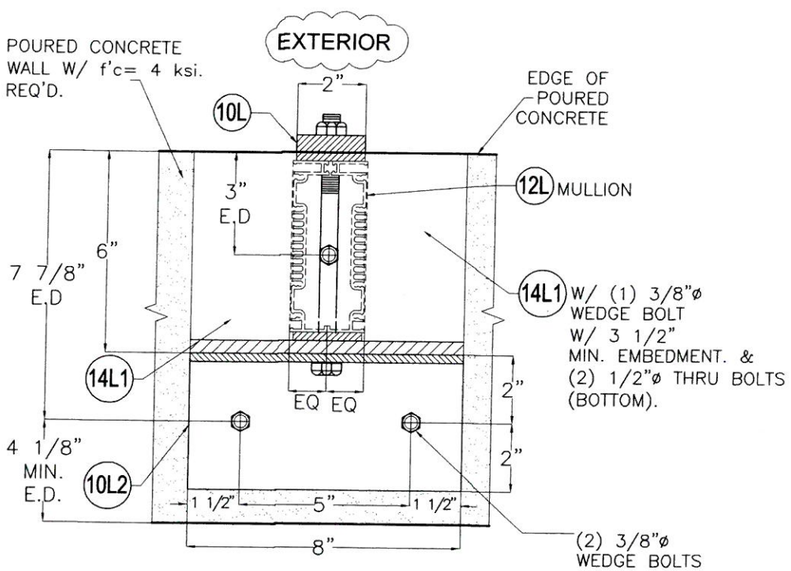

VIEW X'-X'
CONCRETE
SCALE: 1/4"=1"

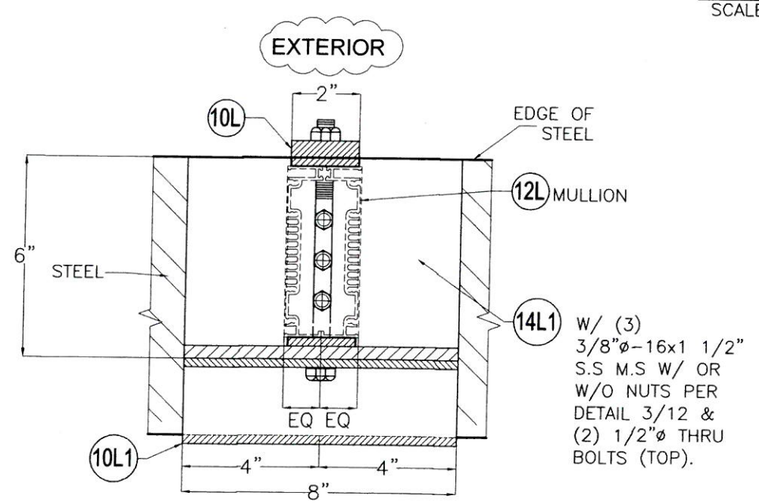

VIEW Y'-Y'
STEEL
SCALE: 1/4"=1"

1/21/16

P.E. SEAL/SIGNATURE/DATE

TEXAS DEPARTMENT OF INSURANCE – 2006

WALTER A. TILLIT Jr P.E.
PROFESSIONAL ENGINEER
6355 N.W 36 STREET, STE. 305
VIRGINIA GARDENS, FL 33166
PHONE(305) 871-1530 FAX (305) 871-1531
TEXAS LIC. # 90691
FIRM REGISTRATION # F-13790

SED-5.1 LOUVER SYSTEM WITH OR WITHOUT CD-151 DAMPER ASSEMBLY

UNITED ENERTECH, INC.
3005 SOUTH HICKORY ST.
CHATTANOOGA, TN 37407
PHONE: (423)698-7715 FAX:(423)698-6629

REV. NO	DESCRIPTION	DATE	REV. No	DESCRIPTION	DATE
1	–	–	3	–	–
2	–	–	4	–	–

M.L.
DRAWN BY:

01/20/16
DATE:

16-005
DRAWING No.

SHEET 13 OF 16

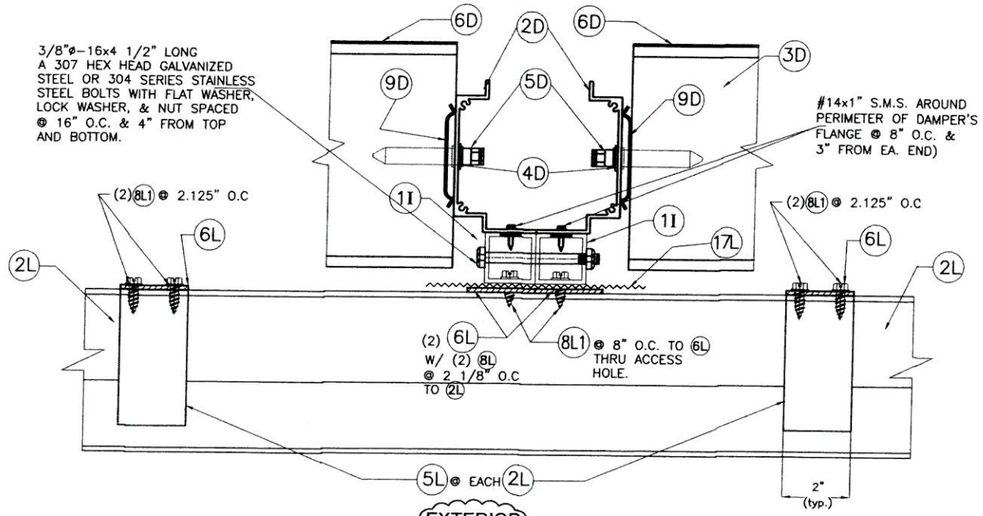

EXTERIOR

SECTION "C-C"

SCALE: 3/16"=1"

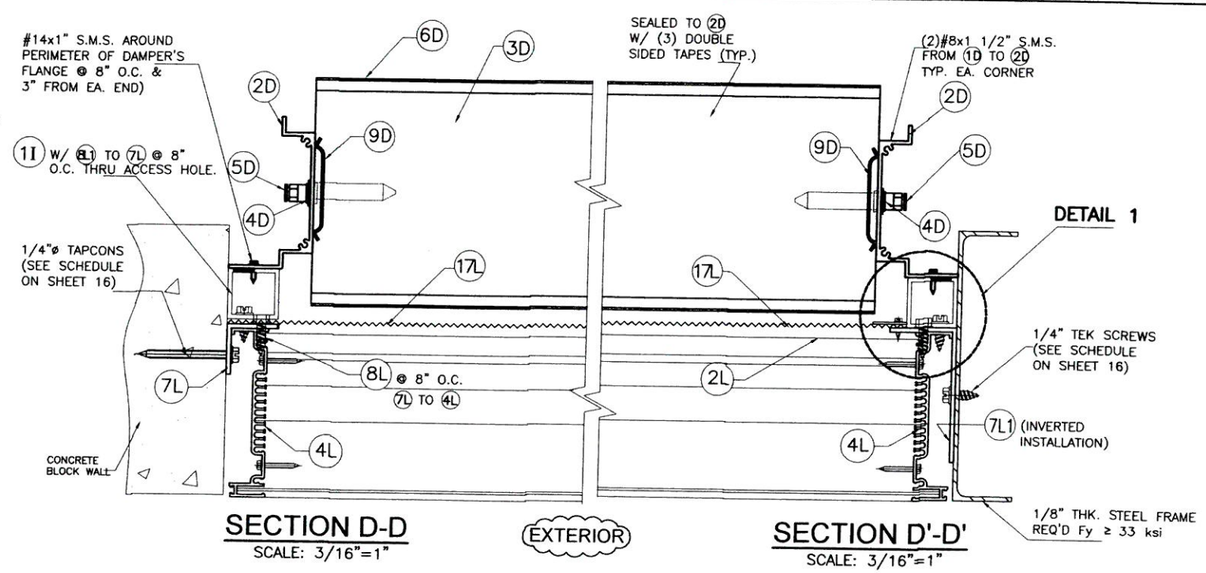

SECTION D-D

SCALE: 3/16"=1"

EXTERIOR

SECTION D'-D'

SCALE: 3/16"=1"

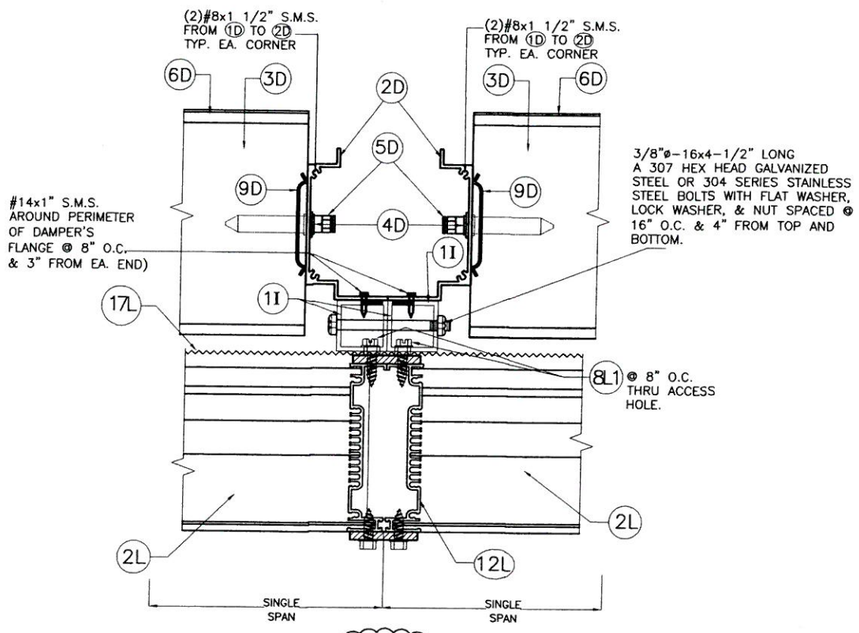

EXTERIOR

SECTION B-B

@ MULLION 12L

SCALE: 3/16"=1"

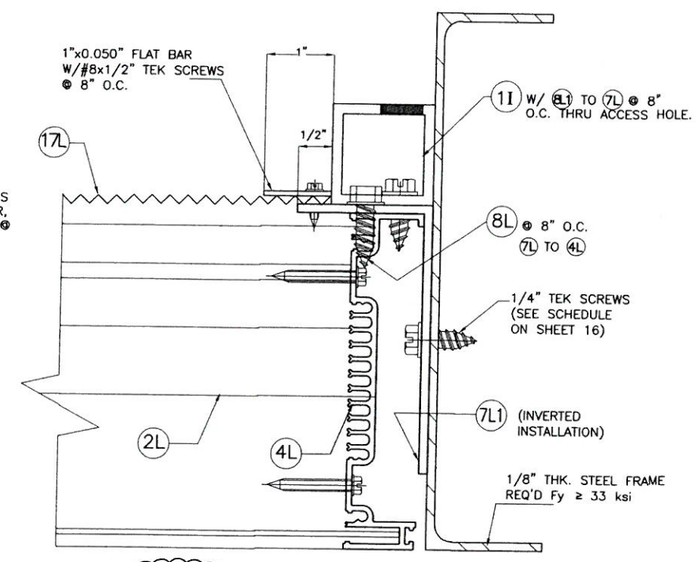

EXTERIOR

DETAIL 1 (PLAN)

1ST LOUVER BLANK-OFF LOCATION

SCALE: 3/8"=1"

1/21/16

P.E. SEAL/SIGNATURE/DATE

TEXAS DEPARTMENT OF INSURANCE – 2006

WALTER A. TILLIT Jr P.E.
PROFESSIONAL ENGINEER
6355 N.W 36 STREET, STE. 305
VIRGINIA GARDENS, FL 33166
PHONE(305) 871-1530 FAX (305) 871-1531
TEXAS LIC. # 90691
FIRM REGISTRATION # F-13790

SED-5.1 LOUVER SYSTEM WITH OR WITHOUT CD-151 DAMPER ASSEMBLY

UNITED ENERTECH, INC.
3005 SOUTH HICKORY ST.
CHATTANOOGA, TN 37407
PHONE: (423)698-7715 FAX:(423)698-6629

REV. NO	DESCRIPTION	DATE	REV. No	DESCRIPTION	DATE
1	–	–	3	–	–
2	–	–	4	–	–

M.L.
DRAWN BY:

01/20/16
DATE:

16-005
DRAWING No.

SHEET 14 OF 16

MAXIMUM LOUVER SYSTEM HEIGHT (ft) SCHEDULE FOR A GIVEN DESIGN PRESSURE RATING (psf) AND A (12L) MULLION SPACING (ft), APPLICABLE TO MULLION CONNECTION TO CONCRETE OR STEEL TOP AND BOTTOM COVERED BY DETAIL 2, SHEET 12 W/ ED. = 3" (FOR CONCRETE W/ MIN. f'c = 4 ksi.)

		Concrete	Steel			Concrete	Steel
40	48	10'- 0"	10'- 0"	100	48	4'-11"	6'-10"
	60	9'-10"	10'- 0"		60	3'-11"	5'- 5"
	72	8'- 3"	10'- 0"		72	3'- 3"	4'- 7"
45	48	10'- 0"	10'- 0"	105	48	4'- 8"	6'- 6"
	60	8'- 9"	10'- 0"		60	3'- 9"	5'- 2"
	72	7'- 4"	10'- 0"		72	3'- 2"	4'- 4"
50	48	9'-10"	10'- 0"	110	48	4'- 6"	6'- 2"
	60	7'-11"	10'- 0"		60	3'- 7"	4'-12"
	72	6'- 7"	9'- 1"		72	2'-12"	4'- 2"
55	48	8'-12"	10'- 0"	115	48	4'- 3"	5'-11"
	60	7'- 2"	9'-11"		60	3'- 5"	4'- 9"
	72	5'-12"	8'- 3"		72	2'-10"	3'-11"
60	48	8'- 3"	10'- 0"	120	48	4'- 1"	5'- 8"
	60	6'- 7"	9'- 1"		60	3'- 3"	4'- 7"
	72	5'- 6"	7'- 7"		72	2'- 9"	3'- 9"
65	48	7'- 7"	10'- 0"	125	48	3'-11"	5'- 5"
	60	6'- 1"	8'- 5"		60	3'- 2"	4'- 4"
	72	5'- 1"	6'-12"		72	2'- 8"	3'- 8"
70	48	7'- 1"	9'- 9"	130	48	3'-10"	5'- 3"
	60	5'- 8"	7'-10"		60	3'- 0"	4'- 2"
	72	4'- 8"	6'- 6"		72	2'- 6"	3'- 6"
75	48	6'- 7"	9'- 1"	135	48	3'- 8"	5'- 1"
	60	5'- 3"	7'- 3"		60	2'-11"	4'- 0"
	72	4'- 5"	6'- 1"		72	2'- 5"	3'- 4"
80	48	6'- 2"	8'- 6"	140	48	3'- 6"	4'-10"
	60	4'-11"	6'-10"		60	2'-10"	3'-11"
	72	4'- 1"	5'- 8"		72	2'- 4"	3'- 3"
85	48	5'-10"	8'- 0"	145	48	3'- 5"	4'- 8"
	60	4'- 8"	6'- 5"		60	2'- 9"	3'- 9"
	72	3'-10"	5'- 4"		72	2'- 3"	3'- 2"
90	48	5'- 6"	7'- 7"	150	48	3'- 3"	4'- 7"
	60	4'- 5"	6'- 1"		60	2'- 8"	3'- 8"
	72	3'- 8"	5'- 1"		72	2'- 2"	3'- 0"
95	48	5'- 2"	7'- 2"				
	60	4'- 2"	5'- 9"				
	72	3'- 6"	4'- 9"				

MAXIMUM LOUVER SYSTEM HEIGHT (ft) SCHEDULE FOR A GIVEN DESIGN PRESSURE RATING (psf) AND A (12L) MULLION SPACING (ft), APPLICABLE TO MULLION CONNECTION TO CONCRETE OR STEEL TOP AND BOTTOM COVERED BY DETAIL 2, SHEET 12 W/ ED. = 4" (FOR CONCRETE W/ MIN. f'c = 4 ksi.)

		Concrete	Steel			Concrete	Steel
40	48	10'- 0"	10'- 0"	100	48	6'-12"	7'- 3"
	60	10'- 0"	10'- 0"		60	5'- 7"	5'-10"
	72	10'- 0"	10'- 0"		72	4'- 8"	4'-10"
45	48	10'- 0"	10'- 0"	105	48	6'- 8"	6'-11"
	60	10'- 0"	10'- 0"		60	5'- 4"	5'- 6"
	72	10'- 0"	10'- 0"		72	4'- 5"	4'- 7"
50	48	10'- 0"	10'- 0"	110	48	6'- 4"	6'- 7"
	60	10'- 0"	10'- 0"		60	5'- 1"	5'- 3"
	72	9'- 4"	9'- 8"		72	4'- 3"	4'- 5"
55	48	10'- 0"	10'- 0"	115	48	6'- 1"	6'- 4"
	60	10'- 0"	10'- 0"		60	4'-10"	5'- 1"
	72	8'- 6"	8'-10"		72	4'- 1"	4'- 3"
60	48	10'- 0"	10'- 0"	120	48	5'-10"	6'- 1"
	60	9'- 4"	9'- 8"		60	4'- 8"	4'-10"
	72	7'- 9"	8'- 1"		72	3'-11"	4'- 0"
65	48	10'- 0"	10'- 0"	125	48	5'- 7"	5'-10"
	60	8'- 7"	8'-11"		60	4'- 6"	4'- 8"
	72	7'- 2"	7'- 5"		72	3'- 9"	3'-10"
70	48	9'-12"	10'- 0"	130	48	5'- 5"	5'- 7"
	60	7'-12"	8'- 4"		60	4'- 4"	4'- 6"
	72	6'- 8"	6'-11"		72	3'- 7"	3'- 9"
75	48	9'- 4"	9'- 8"	135	48	5'- 2"	5'- 5"
	60	7'- 6"	7'- 9"		60	4'- 2"	4'- 4"
	72	6'- 3"	6'- 5"		72	3'- 5"	3'- 7"
80	48	8'- 9"	9'- 1"	140	48	4'-12"	5'- 2"
	60	6'-12"	7'- 3"		60	3'-12"	4'- 2"
	72	5'-10"	6'- 1"		72	3'- 4"	3'- 6"
85	48	8'- 3"	8'- 7"	145	48	4'-10"	5'- 0"
	60	6'- 7"	6'-10"		60	3'-10"	4'- 0"
	72	5'- 6"	5'- 8"		72	3'- 3"	3'- 4"
90	48	7'- 9"	8'- 1"	150	48	4'- 8"	4'-10"
	60	6'- 3"	6'- 5"		60	3'- 9"	3'-10"
	72	5'- 2"	5'- 5"		72	3'- 1"	3'- 3"
95	48	7'- 4"	7'- 8"				
	60	5'-11"	6'- 1"				
	72	4'-11"	5'- 1"				

MAXIMUM LOUVER SYSTEM HEIGHT (ft) SCHEDULE FOR A GIVEN DESIGN PRESSURE RATING (psf) AND A (12L) MULLION SPACING (ft), APPLICABLE TO MULLION CONNECTION TO CONCRETE OR STEEL TOP AND BOTTOM COVERED BY DETAIL 3, SHEET 12 W/ ED. = 3" (FOR CONCRETE W/ MIN. f'c = 4 ksi.)

40	48	10'- 0"	100	48	9'- 2"
	60	10'- 0"		60	8'- 6"
	72	10'- 0"		72	8'- 0"
45	48	10'- 0"	105	48	9'- 0"
	60	10'- 0"		60	8'- 5"
	72	10'- 0"		72	7'-11"
50	48	10'- 0"	110	48	8'-11"
	60	10'- 0"		60	8'- 3"
	72	10'- 0"		72	7'- 9"
55	48	10'- 0"	115	48	8'- 9"
	60	10'- 0"		60	8'- 2"
	72	9'- 9"		72	7'- 8"
60	48	10'- 0"	120	48	8'- 8"
	60	10'- 0"		60	8'- 0"
	72	9'- 6"		72	7'- 6"
65	48	10'- 0"	125	48	8'- 6"
	60	9'-10"		60	7'-11"
	72	9'- 3"		72	7'- 5"
70	48	10'- 0"	130	48	8'- 5"
	60	9'- 7"		60	7'-10"
	72	9'- 0"		72	7'- 4"
75	48	10'- 0"	135	48	8'- 4"
	60	9'- 4"		60	7'- 8"
	72	8'-10"		72	7'- 3"
80	48	9'-11"	140	48	8'- 2"
	60	9'- 2"		60	7'- 7"
	72	8'- 8"		72	7'- 2"
85	48	9'- 8"	145	48	8'- 1"
	60	8'-12"		60	7'- 6"
	72	8'- 6"		72	7'- 1"
90	48	9'- 6"	150	48	8'- 0"
	60	8'-10"		60	7'- 5"
	72	8'- 4"		72	7'- 0"
95	48	9'- 4"			
	60	8'- 8"			
	72	8'- 2"			

NOTE: TOP & BOTTOM MOUNTINGS AT DETAIL 3 MAY BE INTERCHANGEABLE.

MAXIMUM MULLION (12L) HEIGHT FOR MULTIPLE LOUVER SYSTEM SED 5.1 W/ OR W/O DAMPER FOR A GIVEN DESIGN PRESSURE RATING, MULLION SPACING AND CONNECTION TYPE FOR CONNECTIONS INTO CONCRETE OR STEEL SUBSTRATES.

1/21/16

P.E. SEAL/SIGNATURE/DATE

TEXAS DEPARTMENT OF INSURANCE – 2006

WALTER A. TILLIT Jr P.E.
PROFESSIONAL ENGINEER
6355 N.W 36 STREET, STE. 305
VIRGINIA GARDENS, FL 33166
PHONE(305) 871-1530 FAX (305) 871-1531
TEXAS LIC. # 90691
FIRM REGISTRATION # F-13790

SED-5.1 LOUVER SYSTEM WITH OR WITHOUT CD-151 DAMPER ASSEMBLY

UNITED ENERTECH, INC.
3005 SOUTH HICKORY ST.
CHATTANOOGA, TN 37407
PHONE: (423)698-7715 FAX:(423)698-6629

REV. NO	DESCRIPTION	DATE	REV. No	DESCRIPTION	DATE
1	–	–	3	–	–
2	–	–	4	–	–

M.L.
DRAWN BY:

01/20/16
DATE:

16-005
DRAWING No.

SHEET 15 OF 16

ANCHOR SPACING SCHEDULE AT JAMBS, VALID FOR CONNECTION TO CONCRETE, CONCRETE BLOCK & STEEL SUBSTRATES.

ANCHOR SPACING SCHEDULE AT JAMBS W/ 7L (1 1/2"x1 1/2"x1/8" ANGLE)

DESIGN PRESSURE RATING	SINGLE UNIT WIDTH OR MULLION	MAX. SPACING (in)		
(psf.)	SPACING (S) AT MULTIPLE UNITS	TO CONCRETE	TO CONCRETE BLOCK	TO STEEL
75 OR LESS	48	8" O.C	4" O.C	8" O.C
	60	8" O.C	3" O.C	8" O.C
	72	8" O.C	3" O.C	8" O.C
> 75 TO 110	48	8" O.C	3" O.C	8" O.C
	60	8" O.C	3" O.C**	8" O.C
	72	7" O.C	N/A	7 1/2" O.C
> 110 TO 150	48	8" O.C	3" O.C *	8" O.C
	60	6 1/2" O.C	N/A	6 1/2" O.C
	72	5" O.C	N/A	5 1/2" O.C

* LIMITED TO 114.0 psf. DESIGN PRESSURE RATING.

** LIMITED TO 91.0 psf. DESIGN PRESSURE RATING.

ANCHOR SPACING SCHEDULE AT JAMBS W/ 7L1 (2"x4"x1/8" ANGLE)

DESIGN PRESSURE RATING	SINGLE UNIT WIDTH OR MULLION	MAX. SPACING (in)		
(psf.)	SPACING (S) AT MULTIPLE UNITS	TO CONCRETE	TO CONCRETE BLOCK	TO STEEL
75 OR LESS	48	8" O.C	7" O.C	8" O.C
	60	8" O.C	6" O.C	8" O.C
	72	8" O.C	5" O.C	8" O.C
> 75 TO 110	48	8" O.C	5" O.C	8" O.C
	60	8" O.C	4" O.C	8" O.C
	72	8" O.C	3" O.C	8" O.C
> 110 TO 150	48	8" O.C	3" O.C	8" O.C
	60	8" O.C	3" O.C	8" O.C
	72	7 1/2" O.C	3" O.C ***	8" O.C

*** LIMITED TO 127.0 psf. DESIGN PRESSURE RATING.

1/21/16

P.E. SEAL/SIGNATURE/DATE

TEXAS DEPARTMENT OF INSURANCE – 2006

WALTER A. TILLIT Jr P.E.
PROFESSIONAL ENGINEER
6355 N.W 36 STREET, STE. 305
VIRGINIA GARDENS, FL 33166
PHONE(305) 871-1530 FAX (305) 871-1531
TEXAS LIC. # 90691
FIRM REGISTRATION # F-13790

SED-5.1 LOUVER SYSTEM WITH OR WITHOUT CD-151 DAMPER ASSEMBLY

UNITED ENERTECH, INC.
3005 SOUTH HICKORY ST.
CHATTANOOGA, TN 37407
PHONE: (423)698-7715 FAX:(423)698-6629

REV. NO	DESCRIPTION	DATE	REV. No	DESCRIPTION	DATE
1	–	–	3	–	–
2	–	–	4	–	–

M.L.
DRAWN BY:

01/20/16
DATE:

16-005
DRAWING No.

SHEET 16 OF 16