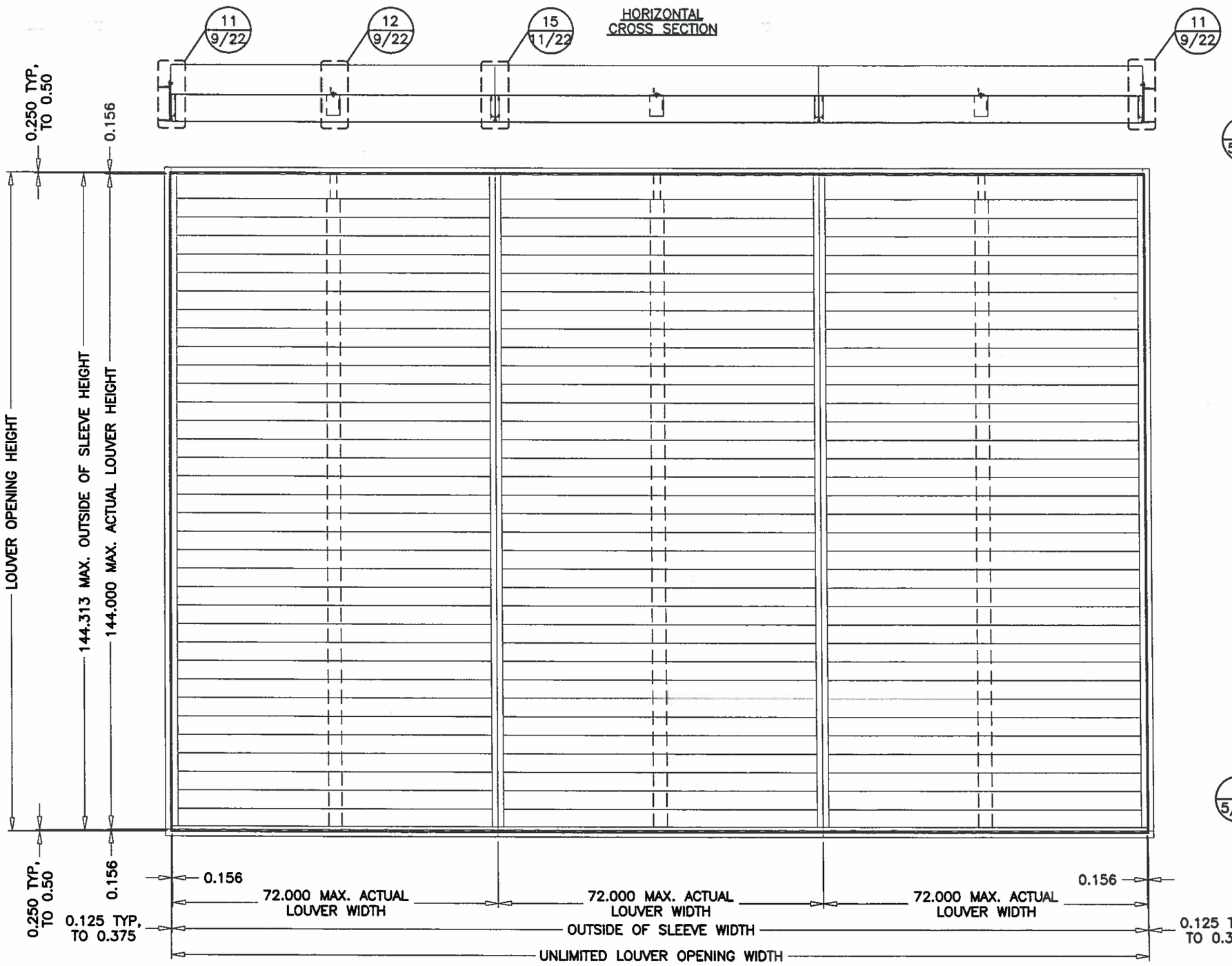

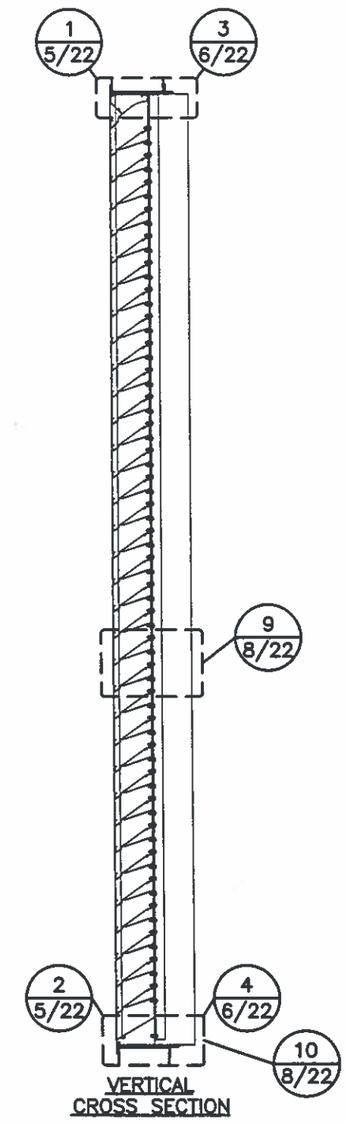

DRAWN BY MES
DATE 8/25/2010
SCALE 1:24
SHEET NO. 1 OF 22
CAD DRAWING NO. K6746MD

AIROLITE
The look that works.™
SCHOFIELD, WISCONSIN 54476
715-359-6171

TITLE
K6746MD LOUVER
FLANGE FRAME
SLEEVE MOUNT
ELEVATION

RICE ENGINEERING
105 School Creek Trail
Luxemburg, WI 54217
Phone: 920.845.1042
Fax: 920.845.1048
www.rice-inc.com

Texas Firm No: F-2183
L. David Rice
Registration No: 81248

STATE OF TEXAS
L. DAVID RICE
81248
REGISTERED PROFESSIONAL ENGINEER

AUG 29 2013

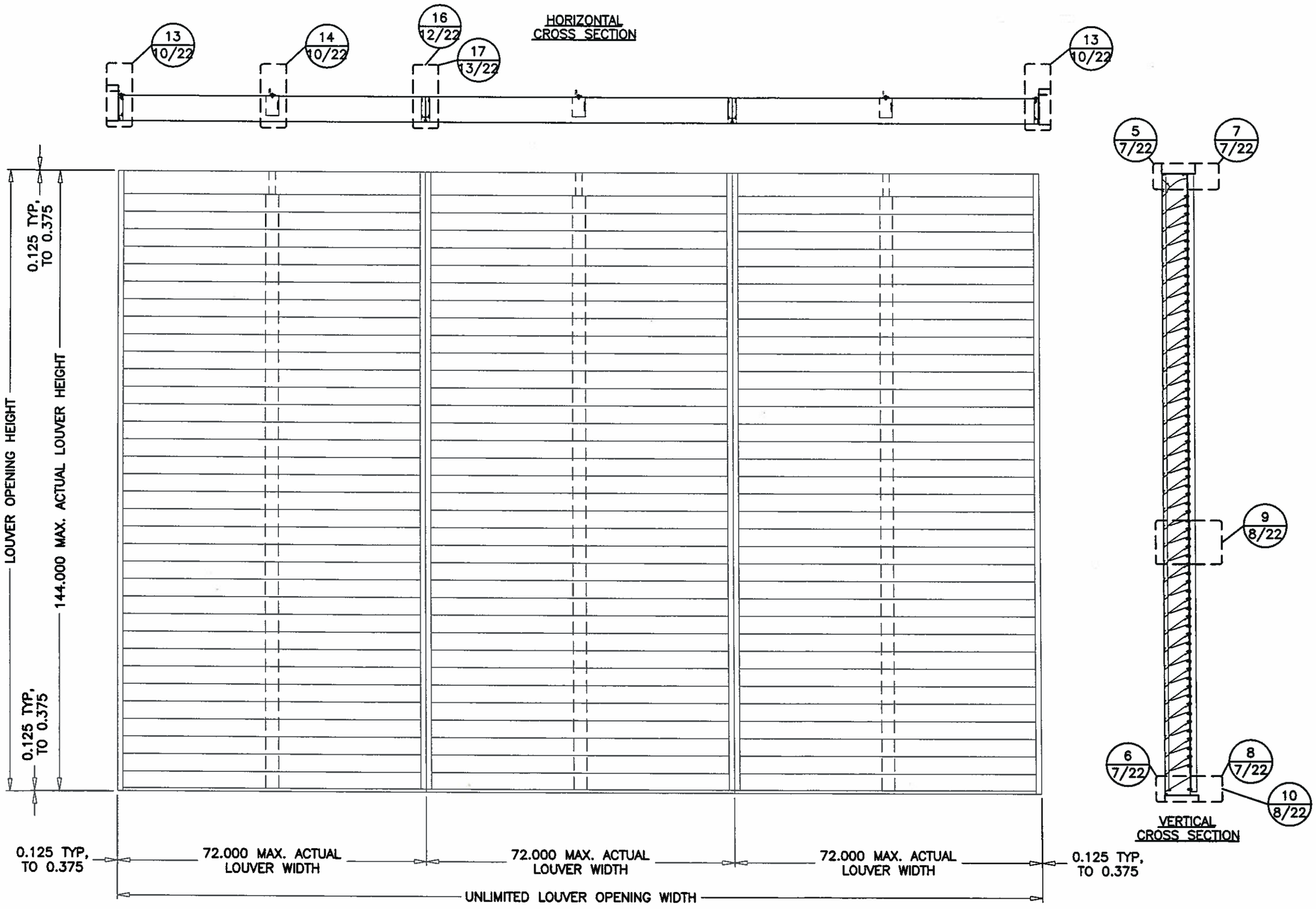

DATE 8/25/2010

DRAWN BY MES

SCALE 1:24

SHEET NO. 2 OF 22

CAD DRAWING NO. K6746MD

AROLITE
The look that works.™
SCHOFIELD, WISCONSIN 54476
715-359-6171

TITLE K6746MD LOUVER
CONTINUOUS ANGLE MOUNT
ELEVATION

RICE ENGINEERING
105 School Creek Trail
Luxemburg, WI 54217
Phone: 920.845.1042
Fax: 920.845.1048
www.rice-inc.com

Texas Firm No. F-2183
L. David Rice
Registration No. 81248

STATE OF TEXAS
L. DAVID RICE
81248
REGISTERED PROFESSIONAL ENGINEER

AUG 2 7 2013

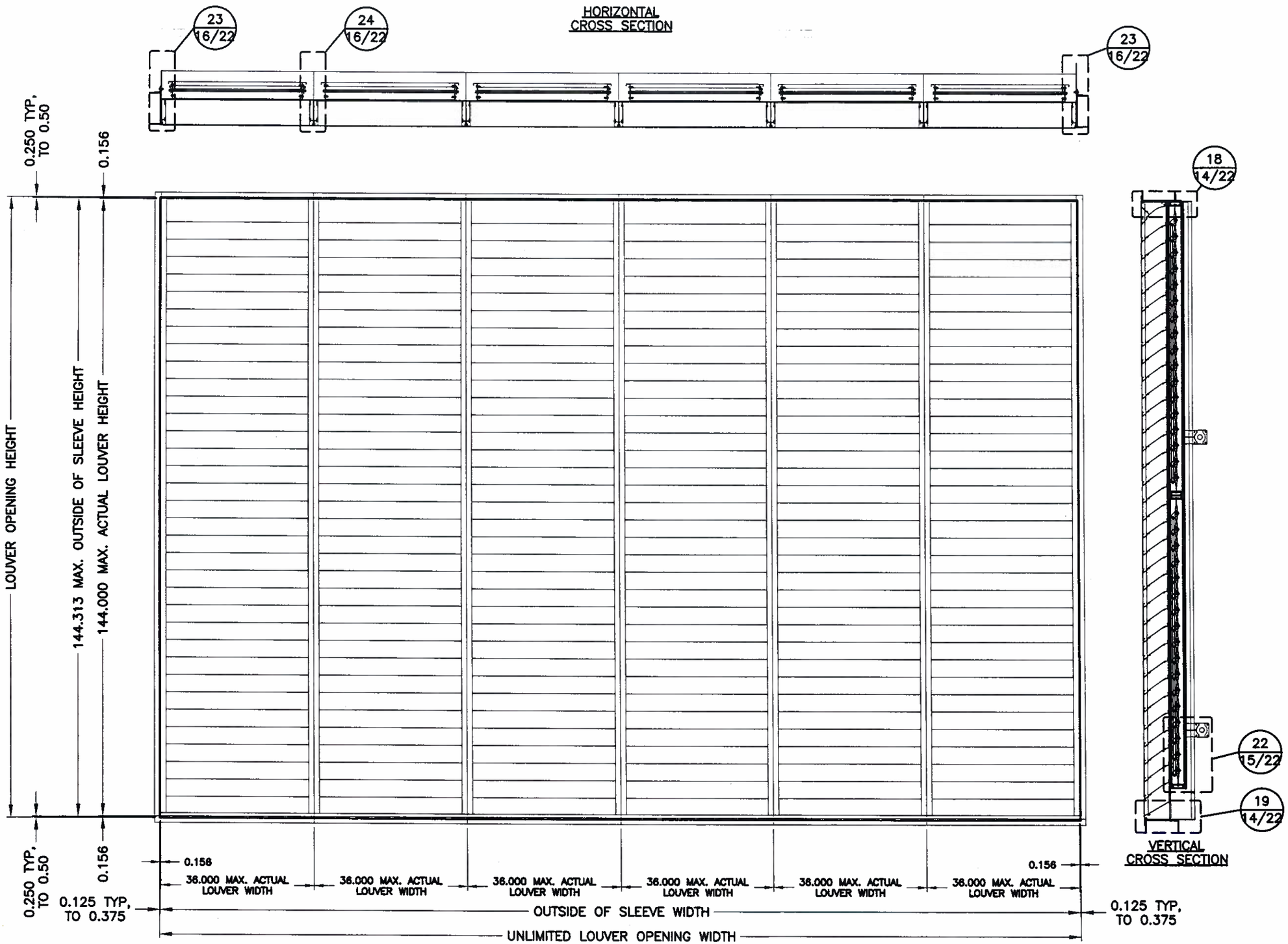

DATE 8/25/2010

DRAWN BY MES

SCALE 1:24

SHEET NO. 3 OF 22

CAD DRAWING NO. K6746MD

AIROLITE
The look that works.™
SCHOFIELD, WISCONSIN 54476
715-359-6171

TITLE K6746MD LOUVER W/VCD-40
FLANGE FRAME
SLEEVE MOUNT
ELEVATION

RICE ENGINEERING
105 School Creek Trail
Luxemburg, WI 54217
Phone: 920.845.1042
Fax: 920.845.1048
www.rice-inc.com

Texas Firm No: F-2183
L. David Rice
Registration No: 81248

STATE OF TEXAS
L. DAVID RICE
81248
REGISTERED PROFESSIONAL ENGINEER

AUG 29 2013

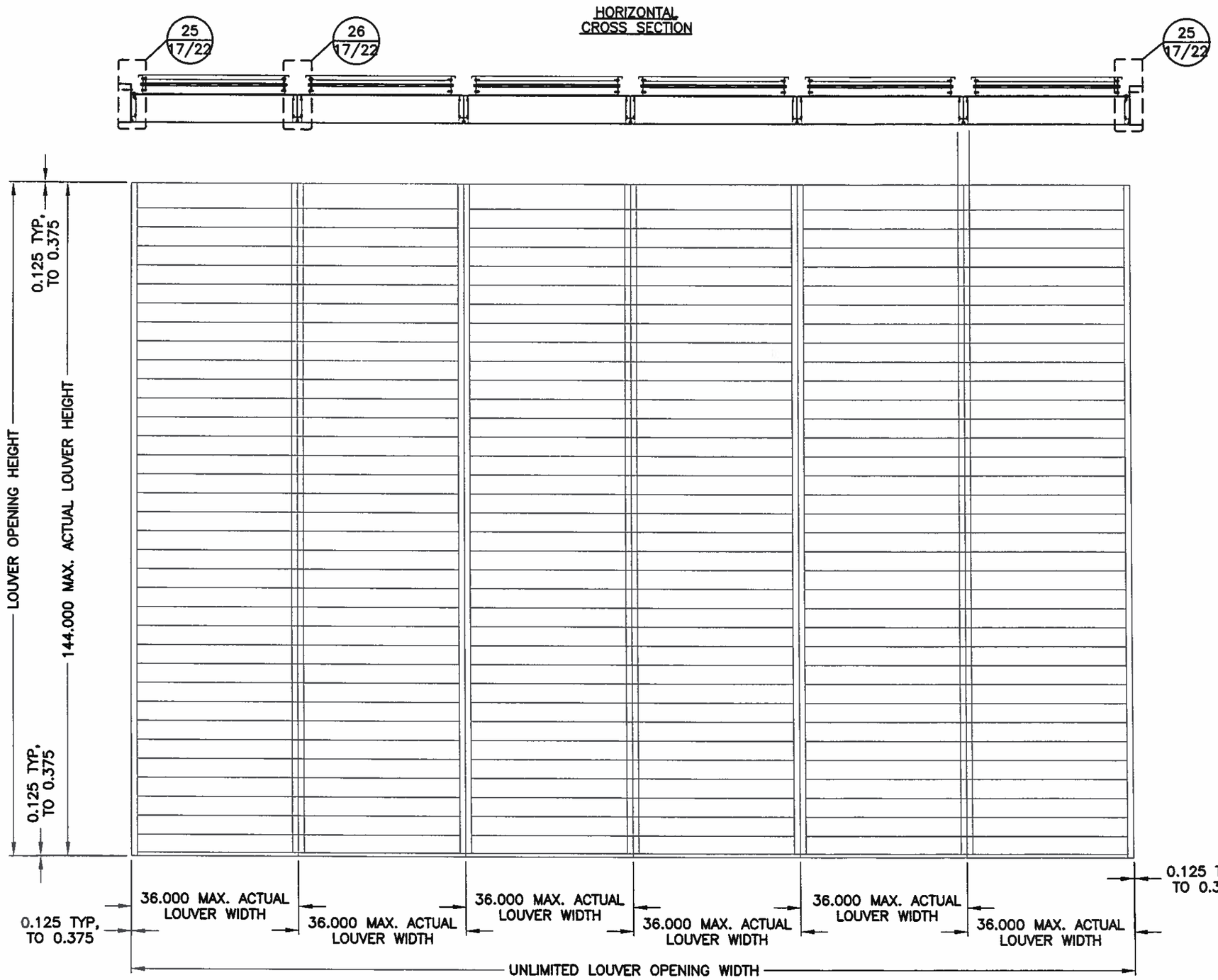

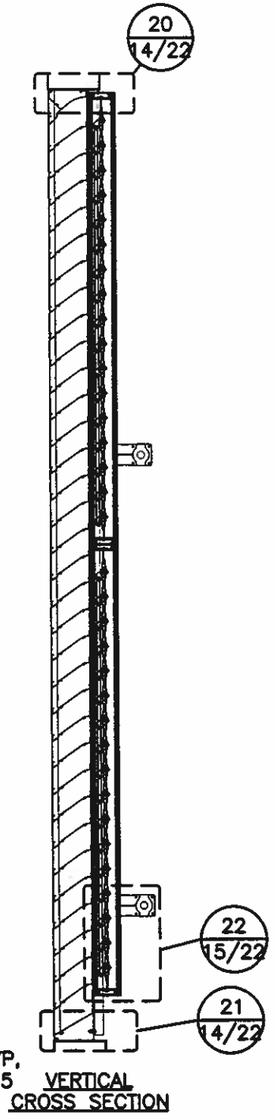

DRAWN BY MES	DATE 8/25/2010
SCALE 1:24	
SHEET NO. 4 OF 22	
CAD DRAWING NO. K6746MD	

AIROLITE
The look that works.™
SCHOFIELD, WISCONSIN 54476
715-359-6171

K6746MD LOUVER W/VCD-40
CONTINUOUS ANGLE MOUNT

ELEVATION

RICE ENGINEERING
105 School Creek Trail
Luxemburg, WI 54217
Phone: 920.845.1042
Fax: 920.845.1048
www.rice-inc.com

Texas Firm No: F-2183
L. David Rice
Registration No: 81248

STATE OF TEXAS
L. DAVID RICE
81248
REGISTERED PROFESSIONAL ENGINEER

AUG 29 2013

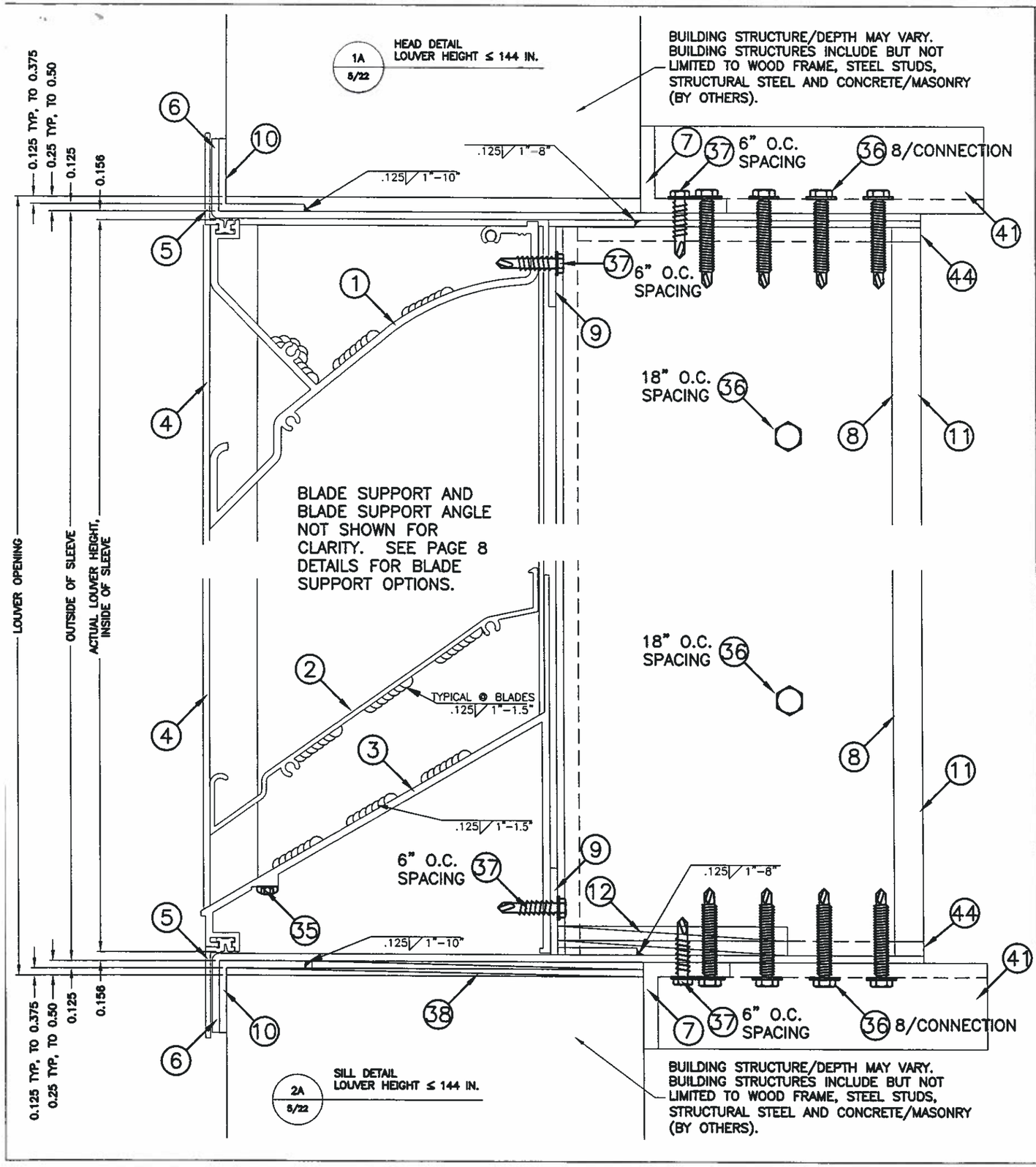

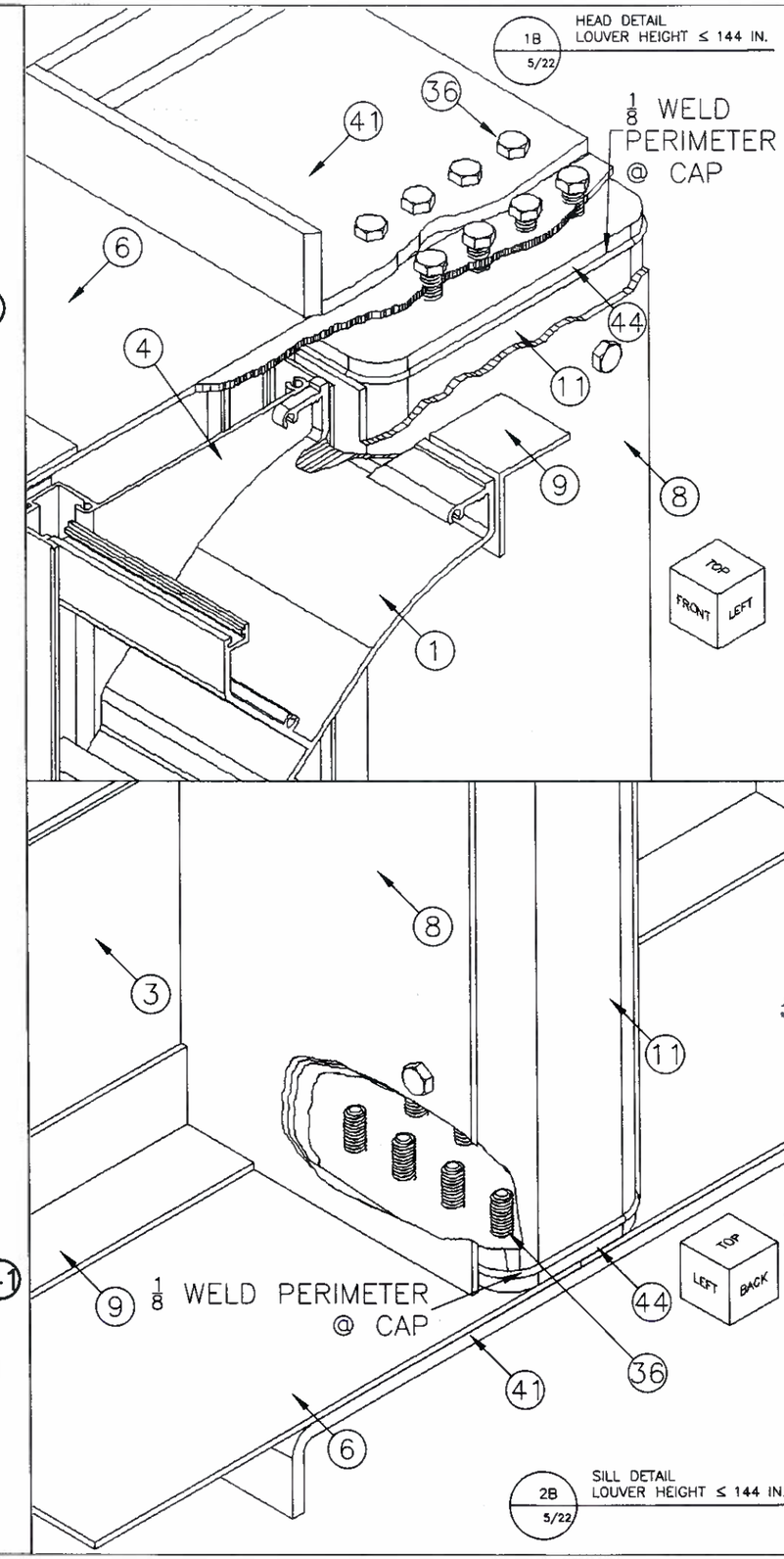

DRAWN BY	MES
DATE	8/25/2010
SCALE	1/2
SHEET NO.	5 OF 22
CAD DRAWING NO.	K6746MD

AIROLITE
The look that works.™
SCHOFIELD, WISCONSIN 54476
715-359-6171

TITLE
K6746MD LOUVER
FLANGE FRAME
SLEEVE MOUNT
HEAD & SILL DETAILS, H≤144"

RICE ENGINEERING
105 School Creek Trail
Luxemburg, WI 54217
Phone. 920.845.1042
Fax: 920.845.1048
www.rice-inc.com

Texas Firm No: F-2183
L. David Rice
Registration No: 81248

STATE OF TEXAS
L. DAVID RICE
81248
REGISTERED PROFESSIONAL ENGINEER

AUG 29 2013

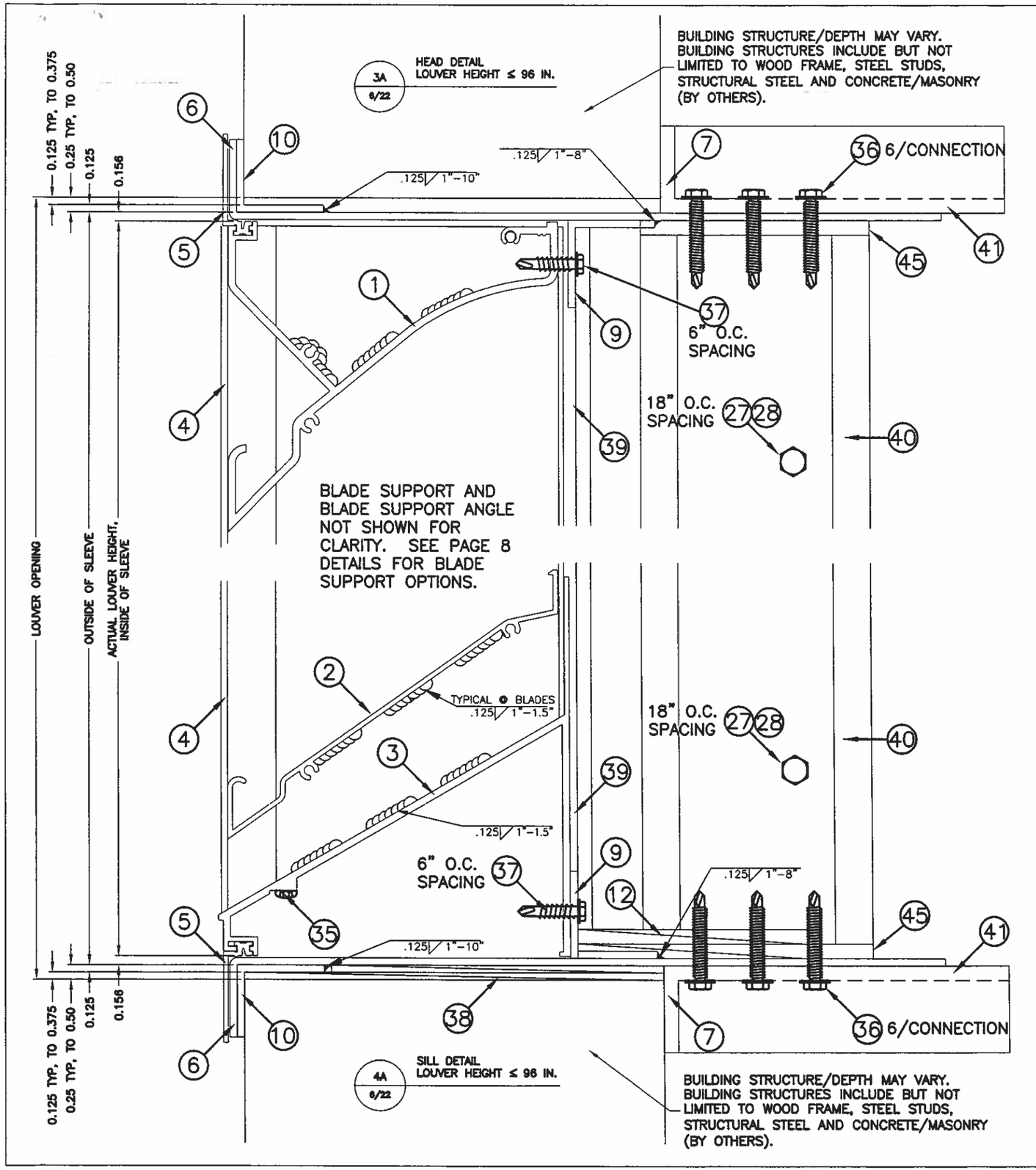

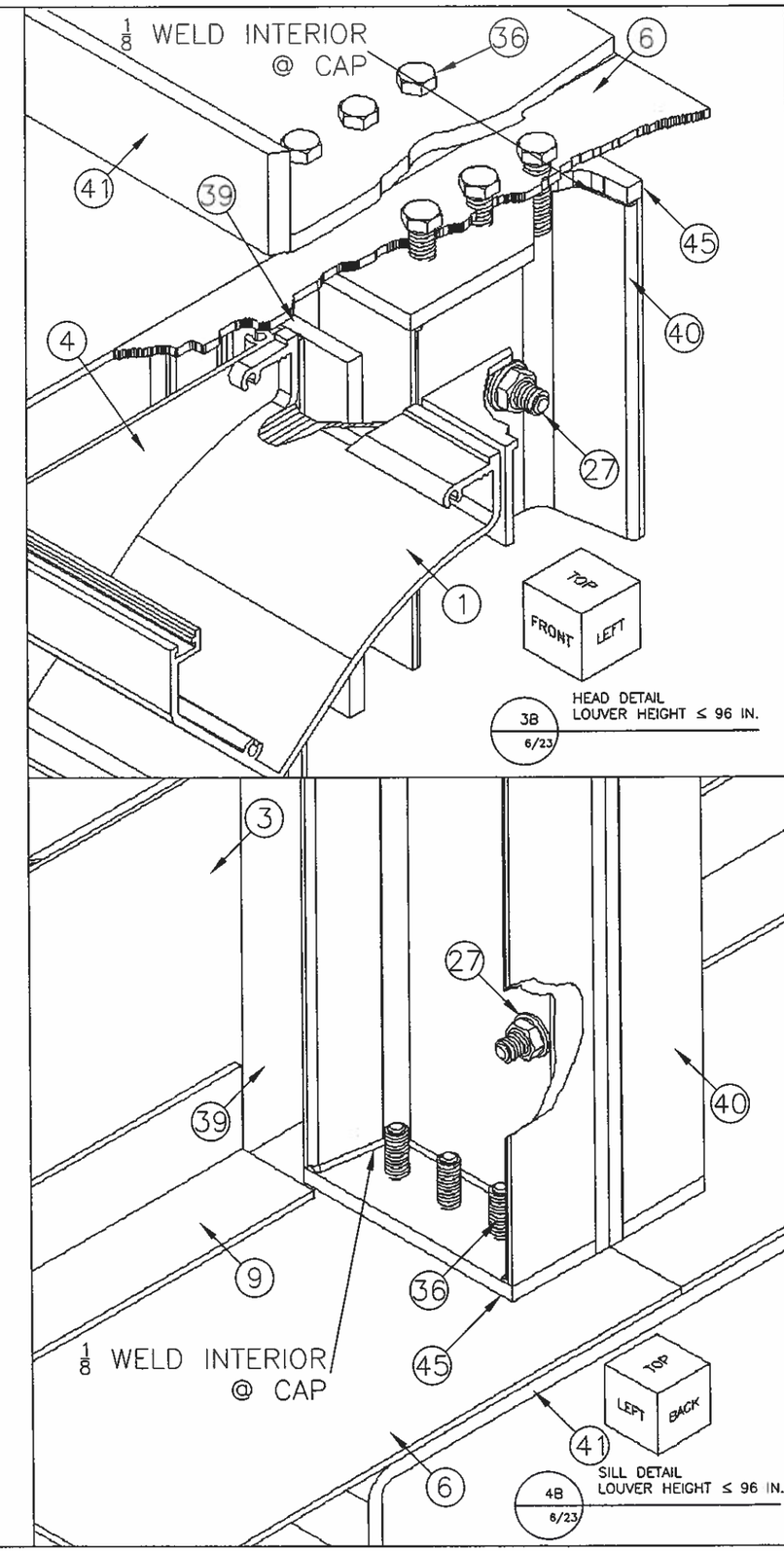

DATE 8/25/2010

DRAWN BY MES

SCALE 1/2

SHEET NO. 6 OF 22

CAD DRAWING NO. K6746MD

AIROLITE
The look that works.™
SCHOFIELD, WISCONSIN 54476
715-359-6171

TITLE
K6746MD LOUVER
FLANGE FRAME
SLEEVE MOUNT
HEAD & SILL DETAILS, H≤96"

RICE ENGINEERING
105 School Creek Trail
Luxemburg, WI 54217
Phone: 920 845.1042
Fax: 920 845.1048
www.rice-inc.com
Texas Firm No. F-2163
L. David Rice
Registration No. 81248

STATE OF TEXAS
L. DAVID RICE
81248
REGISTERED PROFESSIONAL ENGINEER
AUG 29 2013

MULLION DIRECT MOUNT (SHOWN HERE AT HEAD) IS FOR SUBSTRATES WHERE MINIMUM FASTENER EDGE DISTANCE **CAN** BE ACHIEVED BY USE OF HOLES IN THE MULLION END CAP. DETAIL IS TYPICAL FOR BOTH HEAD AND SILL CONDITIONS WHEN APPLICABLE.

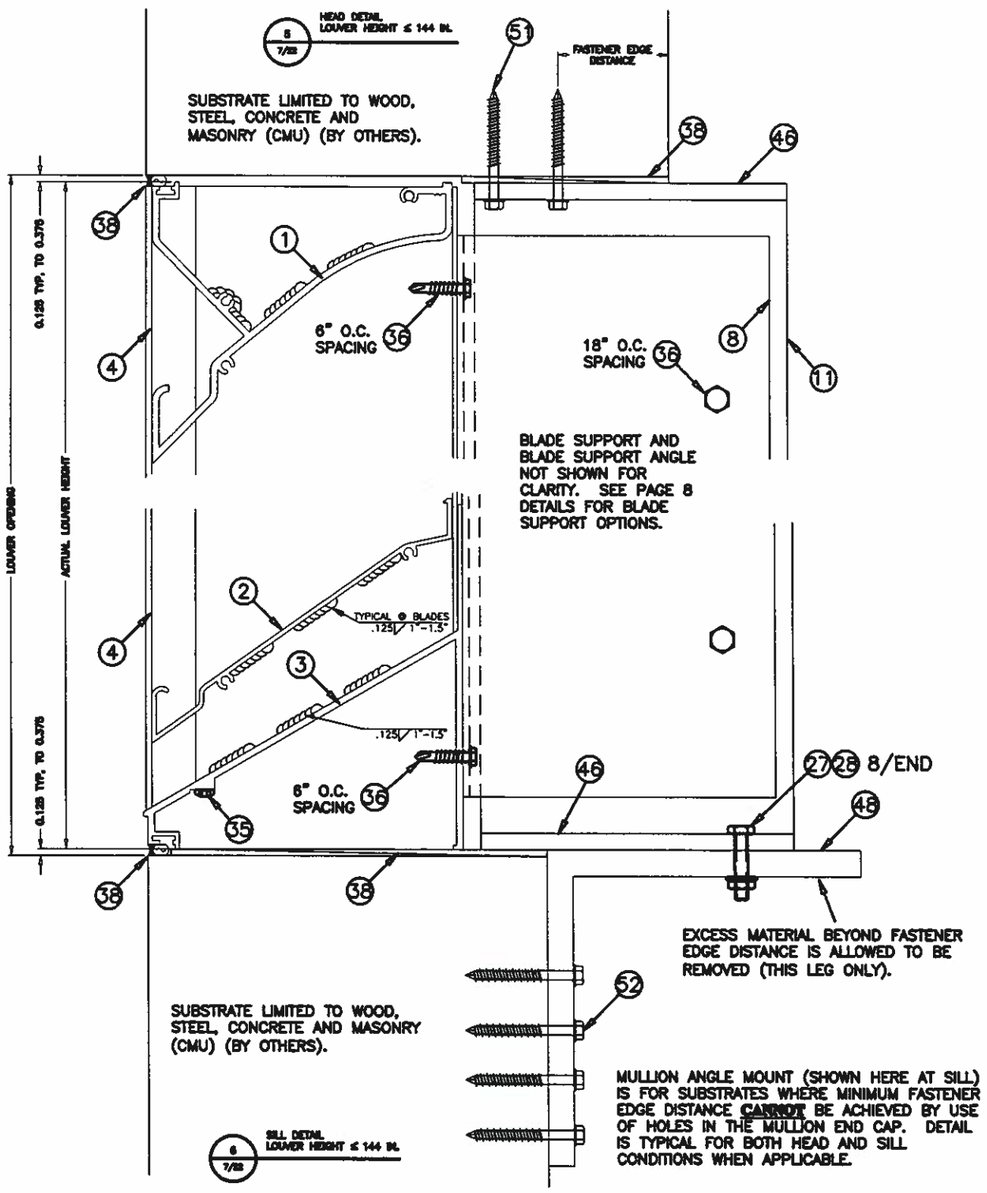

MULLION DIRECT MOUNT (SHOWN HERE AT HEAD) IS FOR SUBSTRATES WHERE MINIMUM FASTENER EDGE DISTANCE **CAN** BE ACHIEVED BY USE OF HOLES IN THE MULLION END CAP. DETAIL IS TYPICAL FOR BOTH HEAD AND SILL CONDITIONS WHEN APPLICABLE.

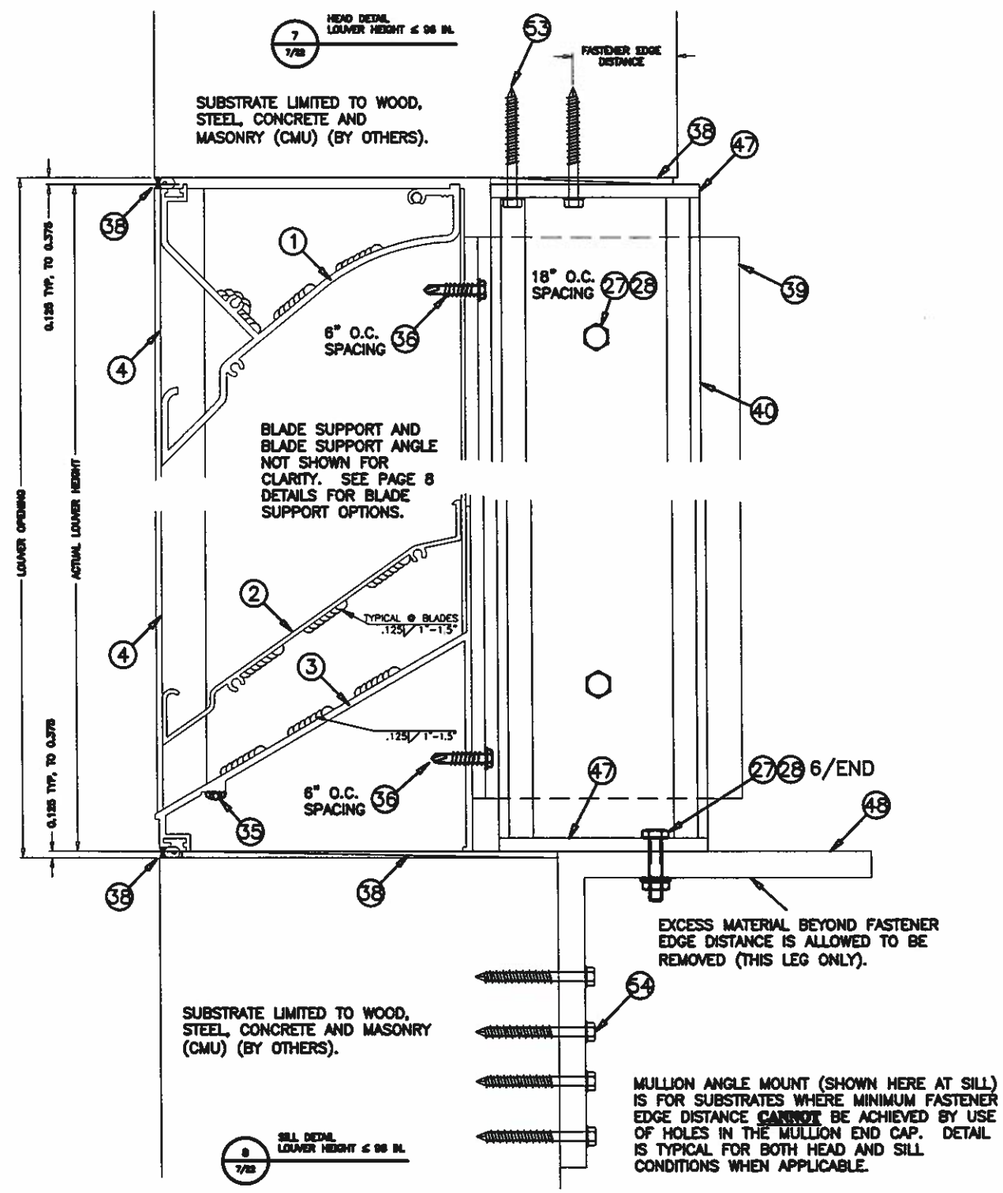

DATE	8/25/2010
DRAWN BY	MES
SCALE	1/3
SHEET NO.	7 OF 22
CAD DRAWING NO.	K6746MD

AIROLITE
The look that works.™
SCHOFIELD, WISCONSIN 54476
715-359-6171

TITLE
K6746MD LOUVER
CONTINUOUS ANGLE MOUNT
HEAD & SILL DETAILS, H≤144",
SILL DETAILS, H≤96"

RICE ENGINEERING
105 School Creek Trail
Luxemburg, WI 54217
Phone: 920.845.1042
Fax: 920.845.1048
www.rice-inc.com

Texas Firm No: F-2183
L. David Rice
Registration No: 81248

STATE OF TEXAS
L. DAVID RICE
81248
REGISTERED PROFESSIONAL ENGINEER

AUG 29 2013

TYPICALLY, ONLY ONE BLADE BRACKET TYPE (ITEMS 13 & 43) IS USED ON THE ASSEMBLY. BOTH STYLES ARE SHOWN HERE TO SHOW DIFFERENCES.

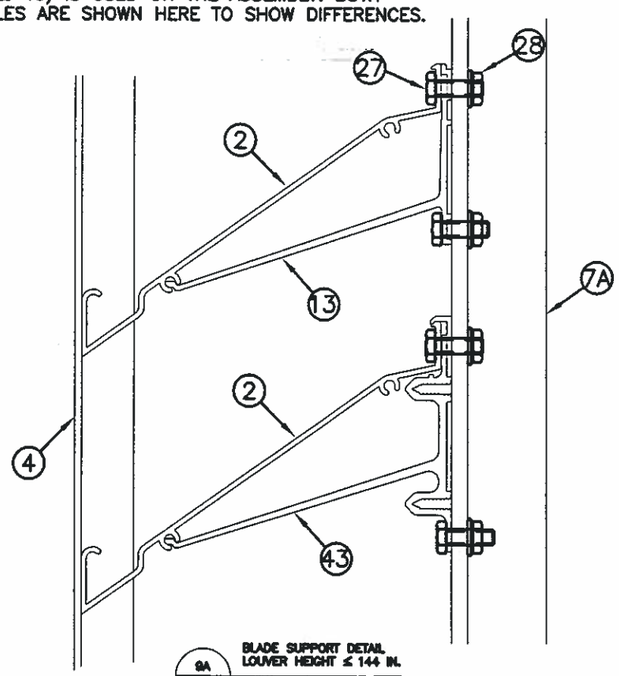

9A 8/22 BLADE SUPPORT DETAIL LOUVER HEIGHT ≤ 144 IN.

TYPICALLY, ONLY ONE BLADE BRACKET TYPE (ITEMS 13 & 43) IS USED ON THE ASSEMBLY. BOTH STYLES ARE SHOWN HERE TO SHOW DIFFERENCES.

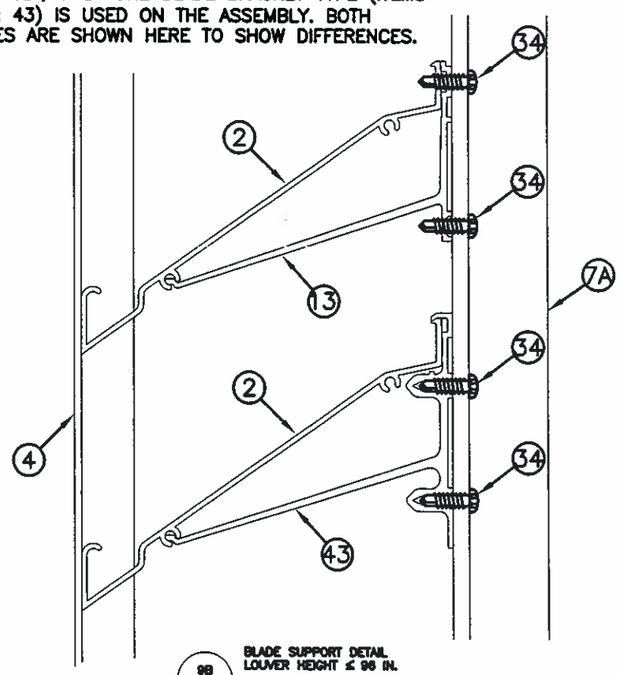

9B 8/22 BLADE SUPPORT DETAIL LOUVER HEIGHT ≤ 96 IN.

BRACKET IS ATTACHED TO SUPPORT ANGLE IN TYPICAL STYLE AS SHOWN IN DETAIL 9.

BLADE/BRACKET IS ATTACHED TO THE BLADE SUPPORT ANGLE

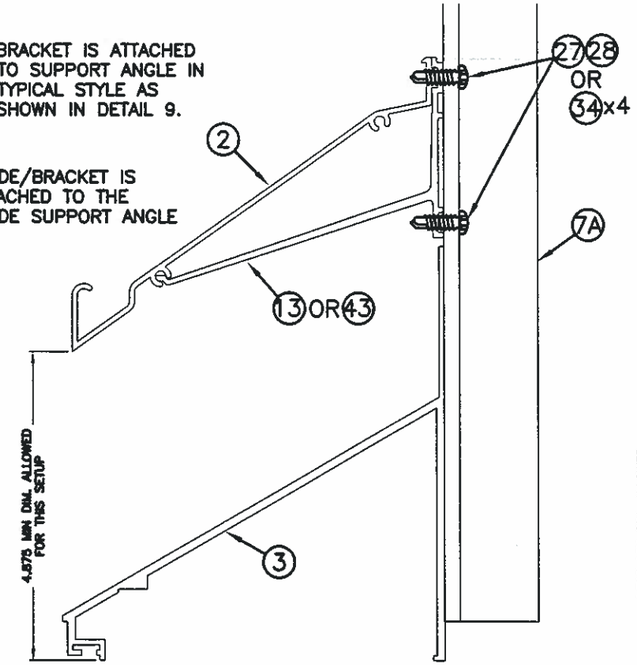

BLADE/BRACKET IS ATTACHED TO THE BLADE SUPPORT ANGLE

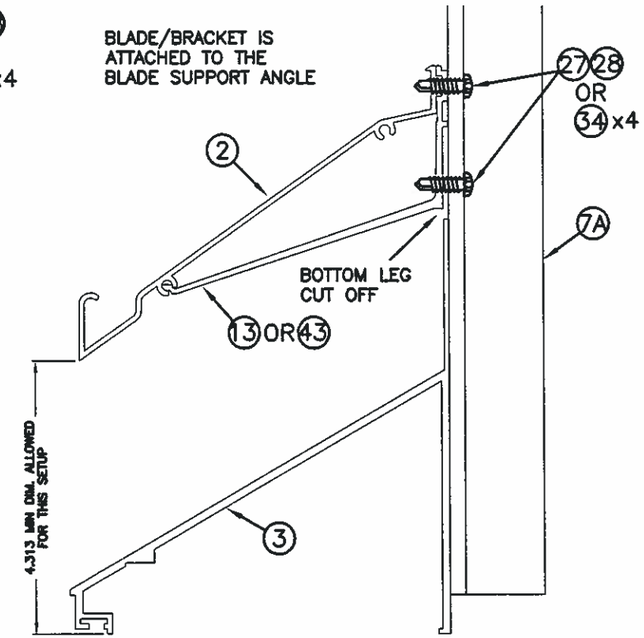

NOTE: THE BLADE SUPPORT ANGLE (ITEM 7A) IS NOT SHOWN IN THE BOTTOM THREE DETAILS IN ORDER TO IMPROVE DETAIL CLARITY. THE BLADE SUPPORT ANGLE IS NOT ATTACHED TO THE BLADE SUPPORT BRACKET (ITEM 13 OR 43) IN THE BOTTOM THREE DETAILS AS THE BRACKET IS ATTACHED TO THE SILL INSTEAD. BLADE SUPPORT BRACKET ITEM 43 CAN REPLACE BLADE SUPPORT BRACKET 13 (SHOWN) IN ANY OF THE DRAWINGS FOR DETAIL 10.

BLADE/BRACKET IS ATTACHED TO THE SILL ONLY.

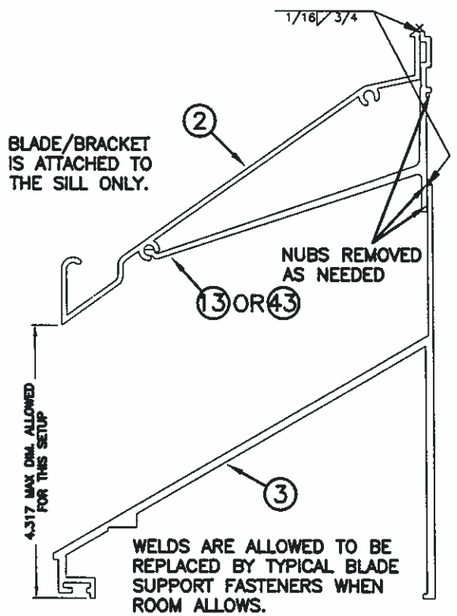

WELDS ARE ALLOWED TO BE REPLACED BY TYPICAL BLADE SUPPORT FASTENERS WHEN ROOM ALLOWS.

BLADE/BRACKET IS ATTACHED TO THE SILL ONLY.

BRACKET CUT SHORT

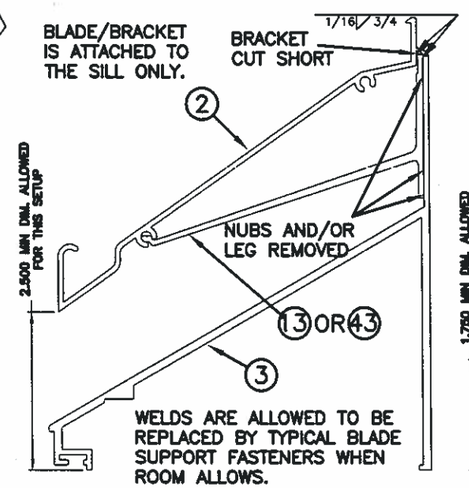

WELDS ARE ALLOWED TO BE REPLACED BY TYPICAL BLADE SUPPORT FASTENERS WHEN ROOM ALLOWS.

BLADE/BRACKET IS ATTACHED TO THE SILL ONLY.

BRACKET CUT SHORT

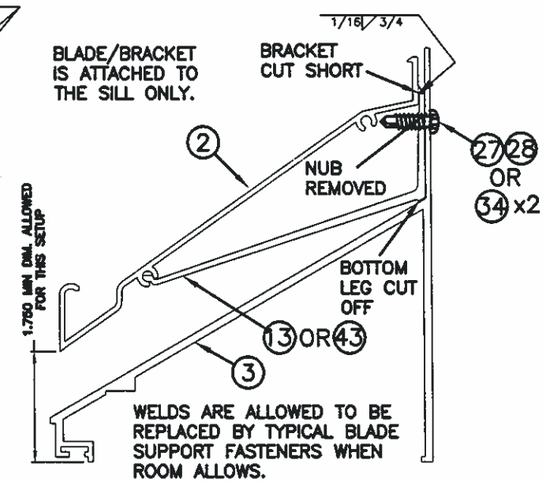

WELDS ARE ALLOWED TO BE REPLACED BY TYPICAL BLADE SUPPORT FASTENERS WHEN ROOM ALLOWS.

10 8/22 BOTTOM BLADE SUPPORT DETAIL LOUVER HEIGHT ≤ 144 IN.

DATE	8/25/2010
DRAWN BY	MES
SCALE	1/2.5
SHEET NO.	8 OF 22
CAD DRAWING NO.	K6746MD

AIROLITE
The look that works.™
SCHOFIELD, WISCONSIN 54476
715-359-6171

TITLE K6746MD LOUVER

BLADE SUPPORT DETAILS

RICE ENGINEERING
105 School Creek Trail
Luxemburg, WI 54217
Phone: 920.845.1042
Fax: 920.845.1048
www.rice-inc.com
Texas Firm No: F-2183
L. David Rice
Registration No: 81248

STATE OF TEXAS
L. DAVID RICE
81248
REGISTERED PROFESSIONAL ENGINEER

AUG 29 2013

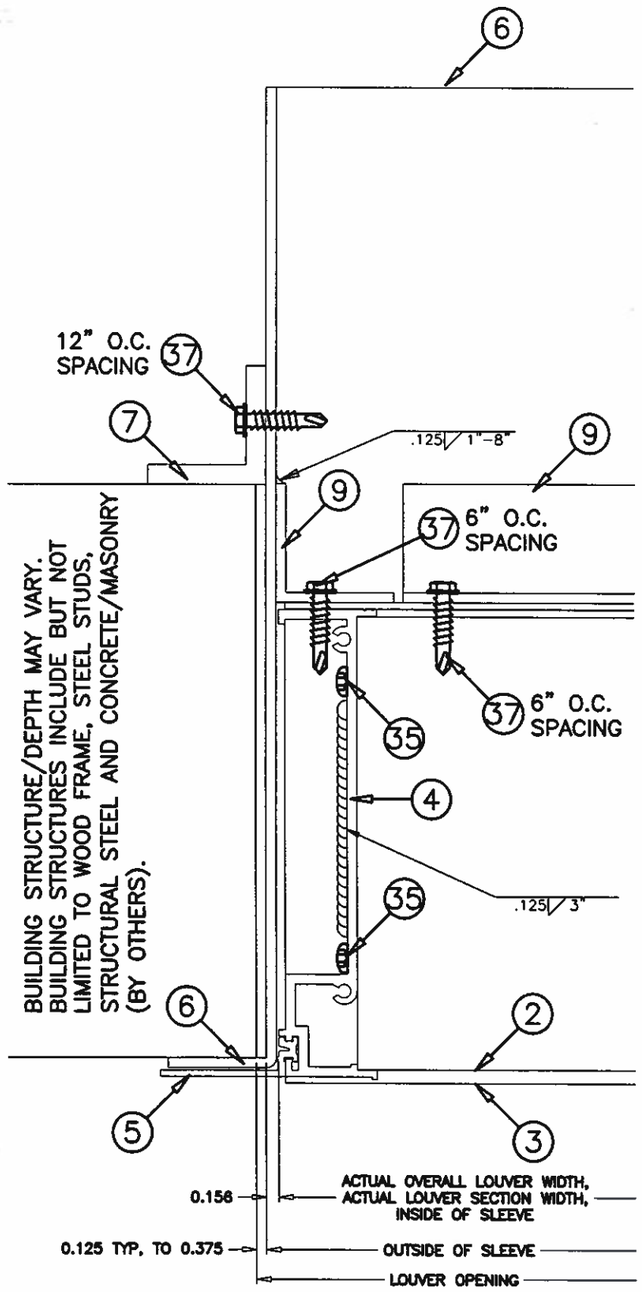

11 / 9/22 JAMB DETAIL

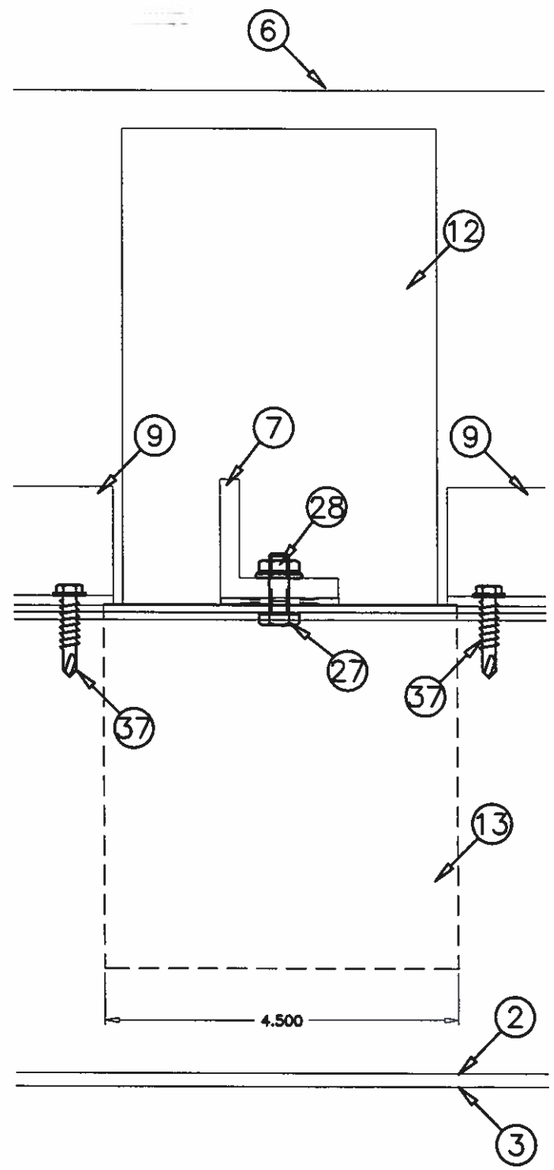

12A / 9/22 SUPPORT DETAIL
LOUVER HEIGHT ≤ 144 IN.

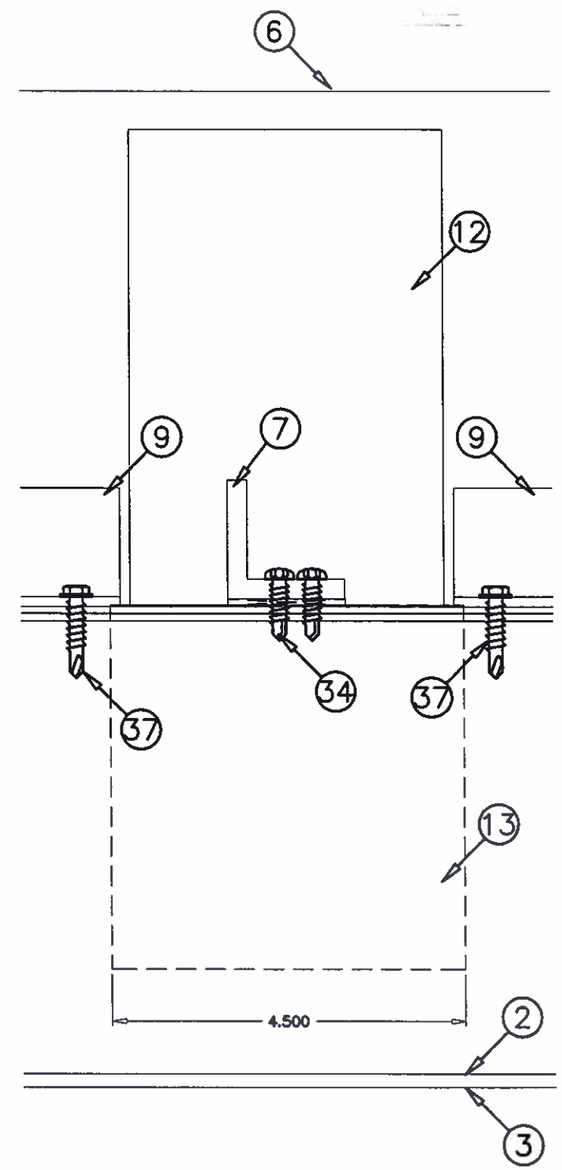

12B / 9/22 SUPPORT DETAIL
LOUVER HEIGHT ≤ 96 IN.

DRAWN BY MES	DATE 8/25/2010
SCALE 1/2	
SHEET NO. 9 OF 22	
CAD DRAWING NO. K6746MD	

AIROLITE
The look that works.™
SCHOFIELD, WISCONSIN 54476
715-359-6171

TITLE
K6746MD LOUVER
FLANGE FRAME
SLEEVE MOUNT
JAMB DETAILS

RICE ENGINEERING
105 School Creek Trail
Luxemburg, WI 54217
Phone: 920.845.1042
Fax: 920.845.1048
www.rice-inc.com
F-2183
81248

STATE OF TEXAS
L. DAVID RICE
81248
PROFESSIONAL ENGINEER

AUG 29 2013

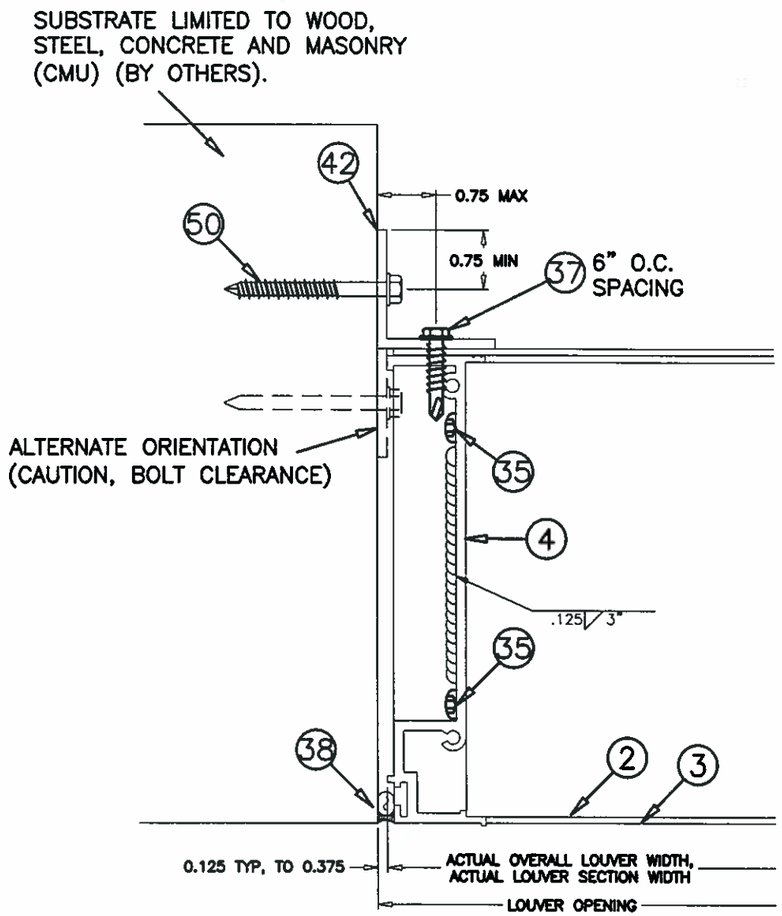

13 / 10/22 JAMB DETAIL LOUVER HEIGHT ≤ 144 IN.

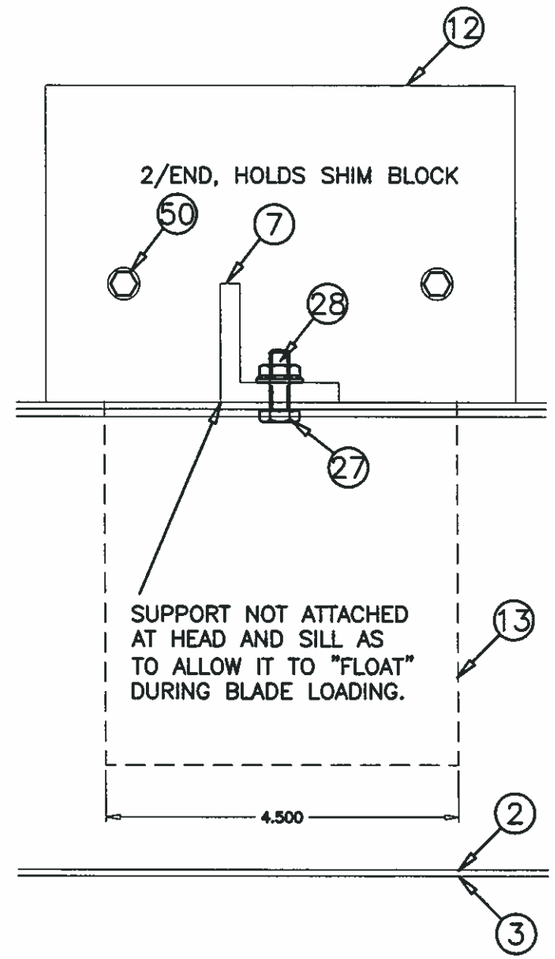

14A / 10/22 SUPPORT DETAIL LOUVER HEIGHT ≤ 144 IN.

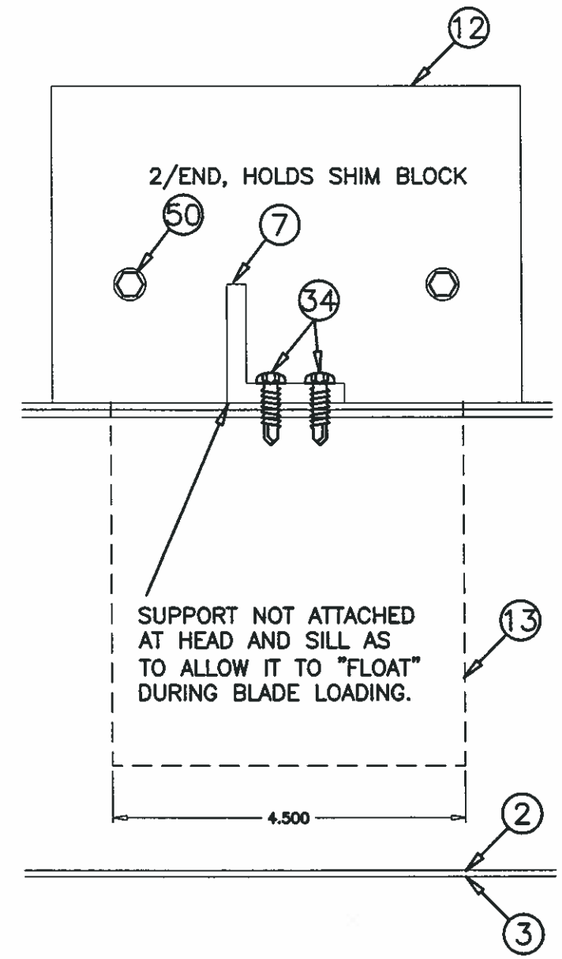

14B / 10/22 SUPPORT DETAIL LOUVER HEIGHT ≤ 96 IN.

DRAWN BY MES
DATE 8/25/2010
SCALE 1/2
SHEET NO. 10 OF 22
CAD DRAWING NO. K6746MD

AIROLITE
The look that works™
SCHOFIELD, WISCONSIN 54476
715-359-6171

TITLE K6746MD LOUVER CONTINUOUS ANGLE MOUNT JAMB DETAILS

RICE ENGINEERING
105 School Creek Trail
Luxemburg, WI 54217
Phone: 920.845.1042
Fax: 920.845.1048
www.rice-inc.com

Texas Firm No: F-2183
L. David Rice
Registration No: 81248

STATE OF TEXAS
L. DAVID RICE
81248
REGISTERED PROFESSIONAL ENGINEER

AUG 29 2013

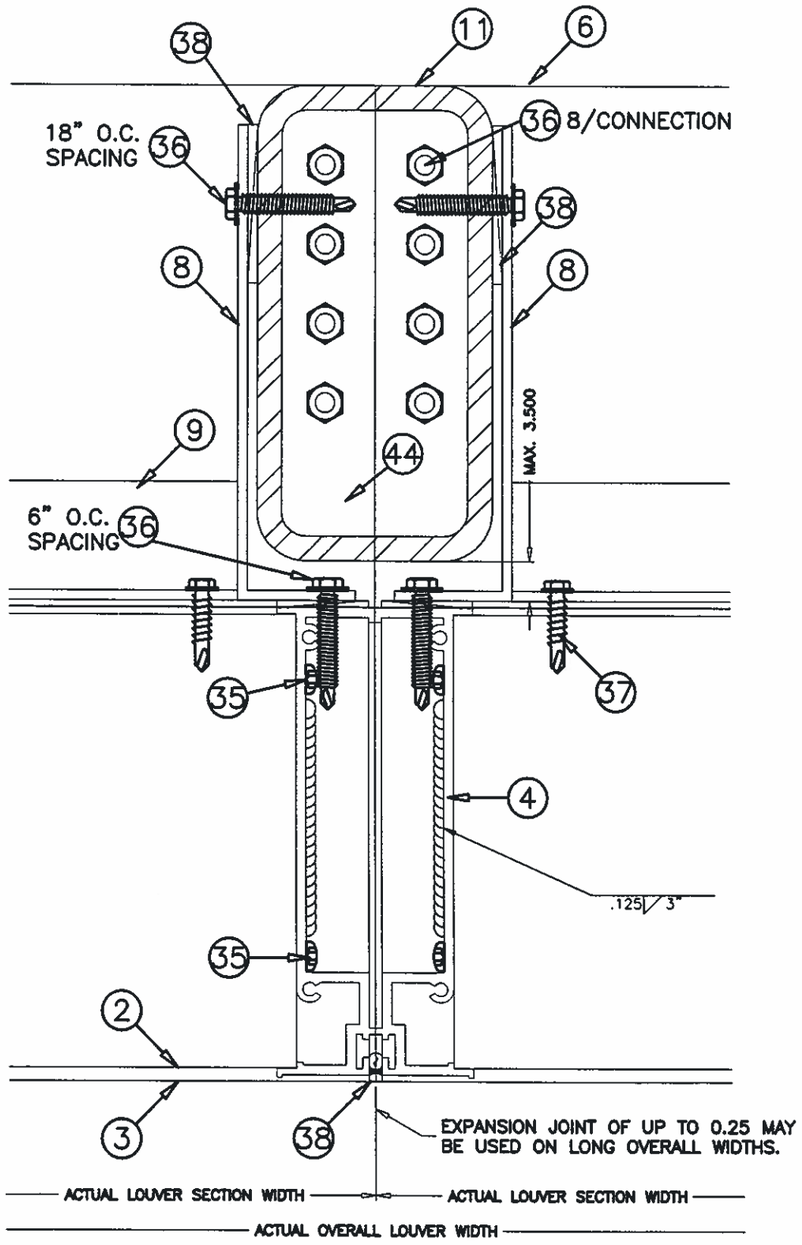

15A
11/22
MULLION DETAIL
LOUVER HEIGHT ≤ 144 IN.

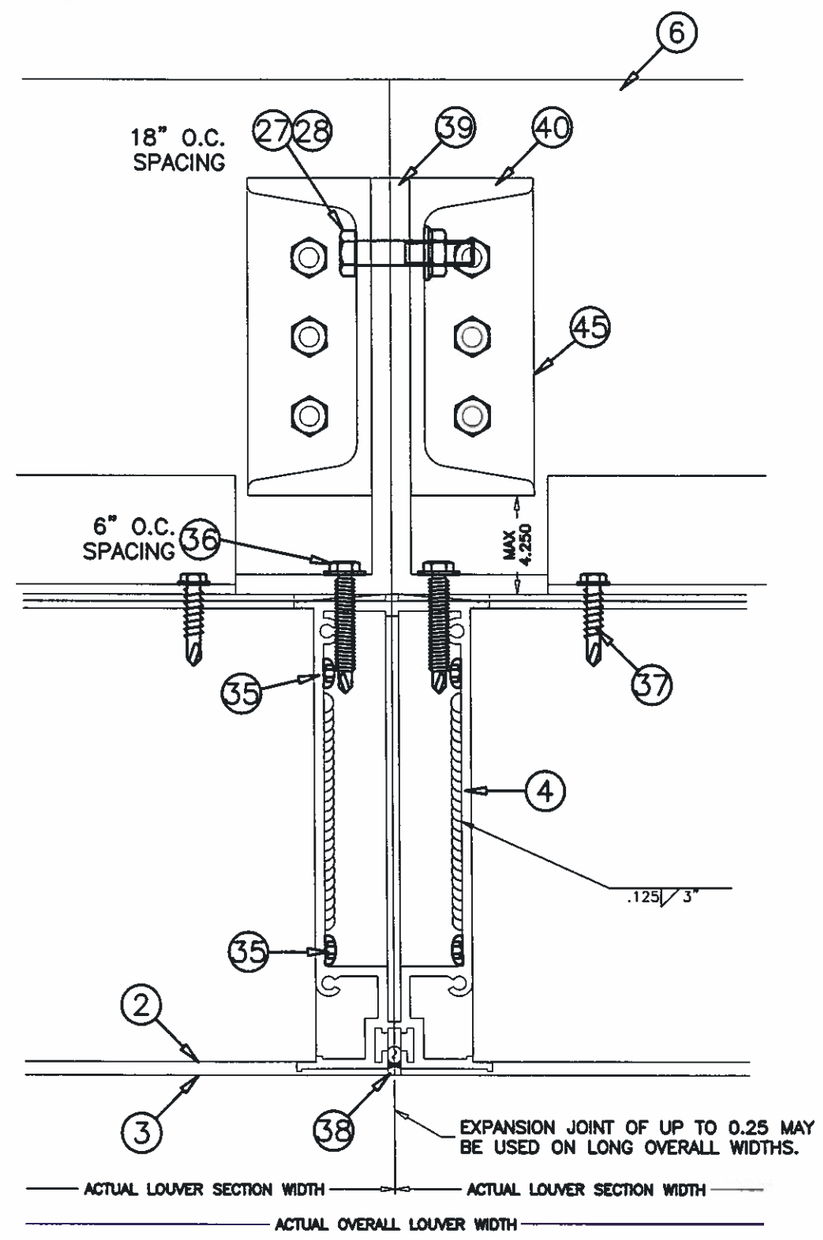

15B
11/22
MULLION DETAIL
LOUVER HEIGHT ≤ 96 IN.

DRAWN BY MES
DATE 8/25/2010
SCALE 1/2
SHEET NO. 11 OF 22
CAD DRAWING NO. K6746MD

AIROLITE
The look that works.™
SCHOFIELD, WISCONSIN 54476
715-359-6171

TITLE
K6746MD LOUVER
FLANGE FRAME
SLEEVE MOUNT
MULLION DETAILS

RICE
ENGINEERING
105 School Creek Trail
Luxemburg, WI 54217
Phone: 920.845.1042
Fax: 920.845.1048
www.rice-inc.com
Texas Firm No: F-2183
L. David Rice
Registration No: 81248

STATE OF TEXAS
L. DAVID RICE
81248
REGISTERED
PROFESSIONAL ENGINEER
AUG 29 2013

MULLION DIRECT MOUNT (SHOWN HERE AT HEAD) IS FOR SUBSTRATES WHERE MINIMUM FASTENER EDGE DISTANCE **CAN** BE ACHIEVED BY USE OF HOLES IN THE MULLION END CAP. DETAIL IS TYPICAL FOR BOTH HEAD AND SILL CONDITIONS WHEN APPLICABLE.

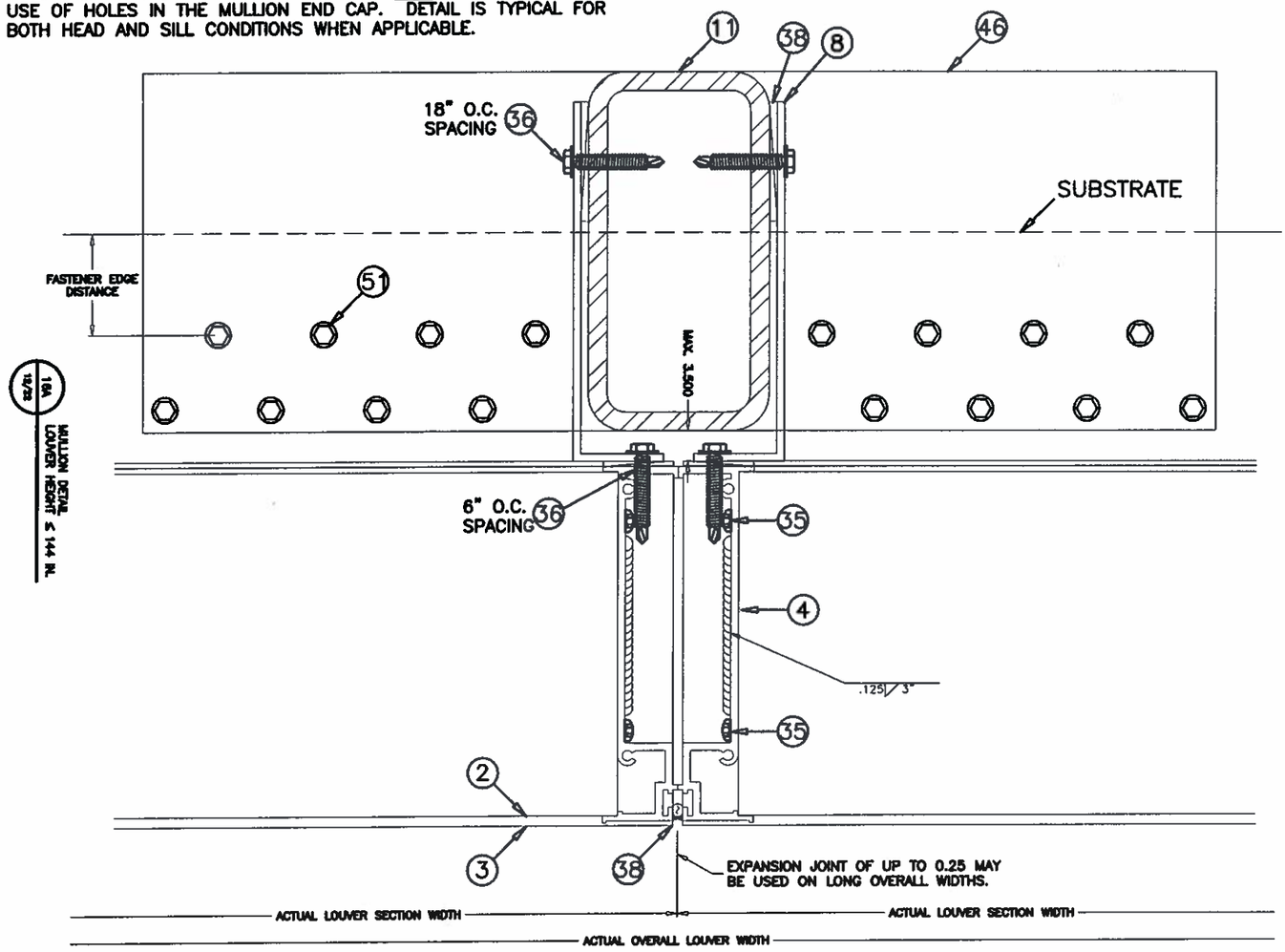

1.0A 10/22 MULLION DETAIL LOUVER HEIGHT ≤ 144 IN.

MULLION ANGLE MOUNT (SHOWN HERE AT SILL) IS FOR SUBSTRATES WHERE MINIMUM FASTENER EDGE DISTANCE **CANNOT** BE ACHIEVED BY USE OF HOLES IN THE MULLION END CAP. DETAIL IS TYPICAL FOR BOTH HEAD AND SILL CONDITIONS WHEN APPLICABLE.

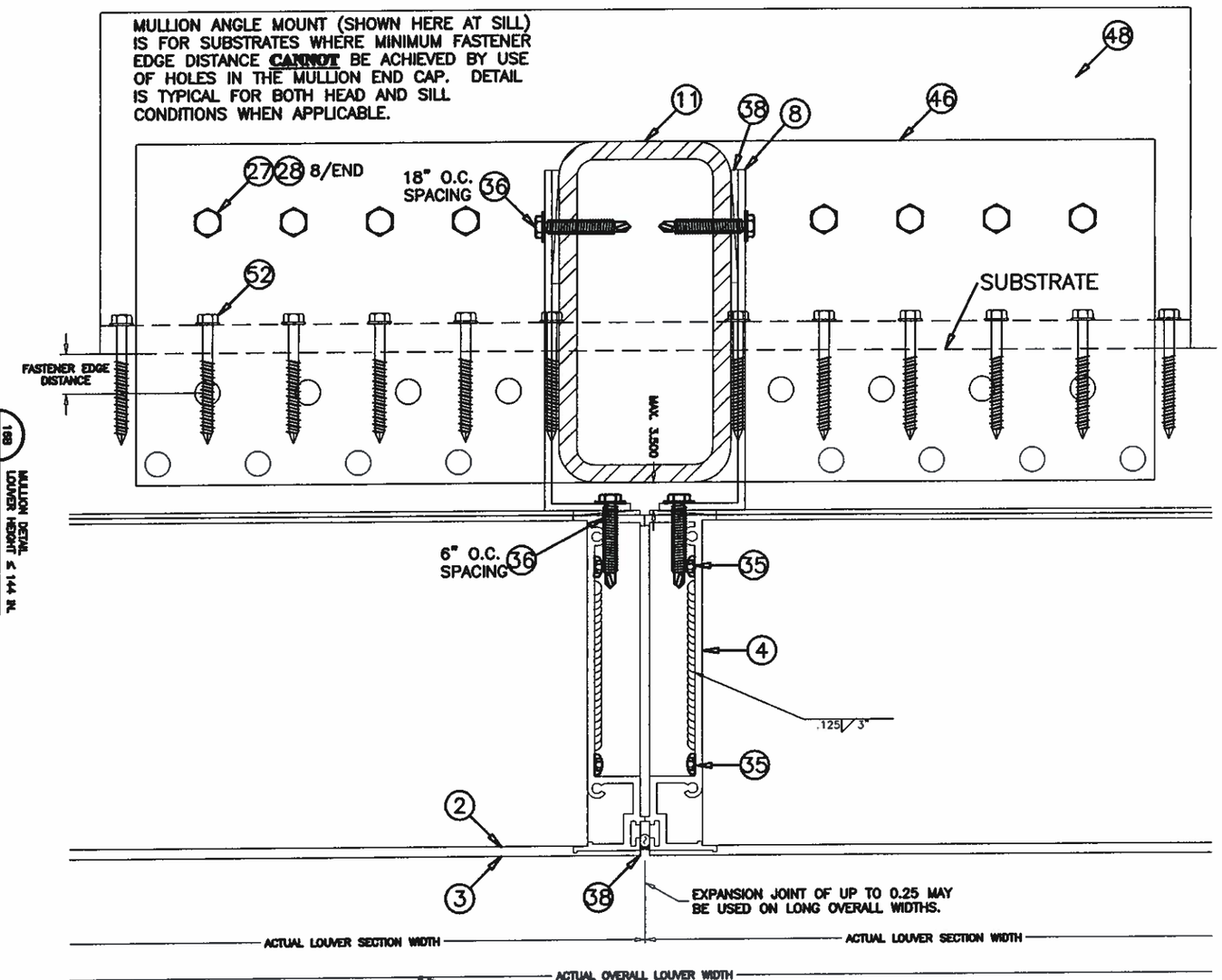

1.0B 10/22 MULLION DETAIL LOUVER HEIGHT ≤ 144 IN.

RICE ENGINEERING
105 School Creek Trail
Luxemburg, WI 54217
Phone: 920.845.1042
Fax: 920.845.1048
www.rice-inc.com
Texas Firm No: F-2183
L. David Rice
Registration No: 81248

STATE OF TEXAS
L. DAVID RICE
81248
REGISTERED PROFESSIONAL ENGINEER

AUG 29 2013

AIROLITE
The look that works.™
SCHOFIELD, WISCONSIN 54476
715-359-6171

TITLE
K6746MD LOUVER
CONTINUOUS ANGLE MOUNT

MULLION DETAILS, H≤144"

DRAWN BY MES	DATE 8/25/2010
SCALE 1/2.5	
SHEET NO. 12 OF 22	
CAD DRAWING NO. K6746MD	

MULLION DIRECT MOUNT (SHOWN HERE AT HEAD) IS FOR SUBSTRATES WHERE MINIMUM FASTENER EDGE DISTANCE **CAN** BE ACHIEVED BY USE OF HOLES IN THE MULLION END CAP. DETAIL IS TYPICAL FOR BOTH HEAD AND SILL CONDITIONS WHEN APPLICABLE.

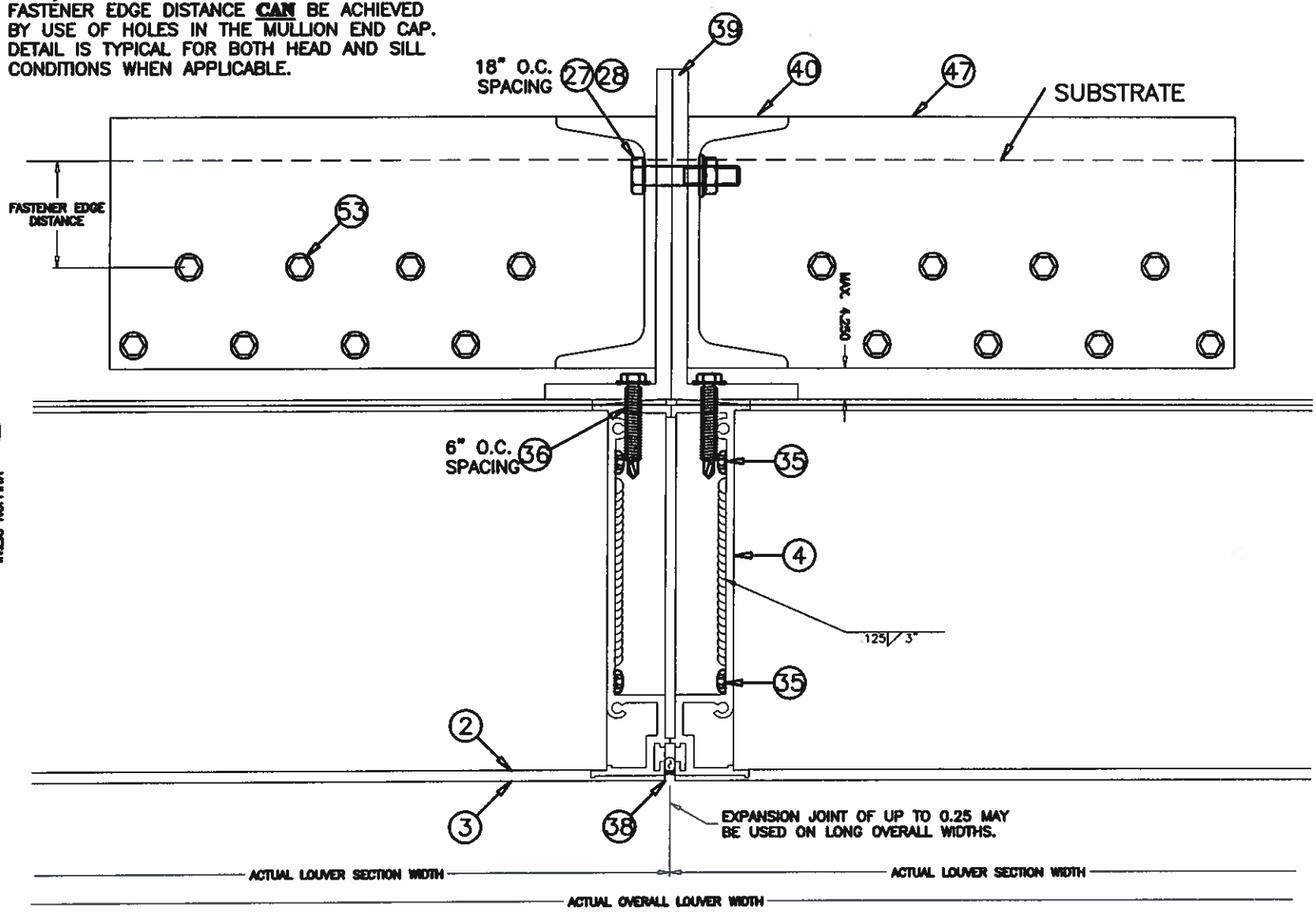

17A 13/22 MULLION DETAIL LOUVER HEIGHT ≤ 96 IN.

MULLION ANGLE MOUNT (SHOWN HERE AT SILL) IS FOR SUBSTRATES WHERE MINIMUM FASTENER EDGE DISTANCE **CANNOT** BE ACHIEVED BY USE OF HOLES IN THE MULLION END CAP. DETAIL IS TYPICAL FOR BOTH HEAD AND SILL CONDITIONS WHEN APPLICABLE.

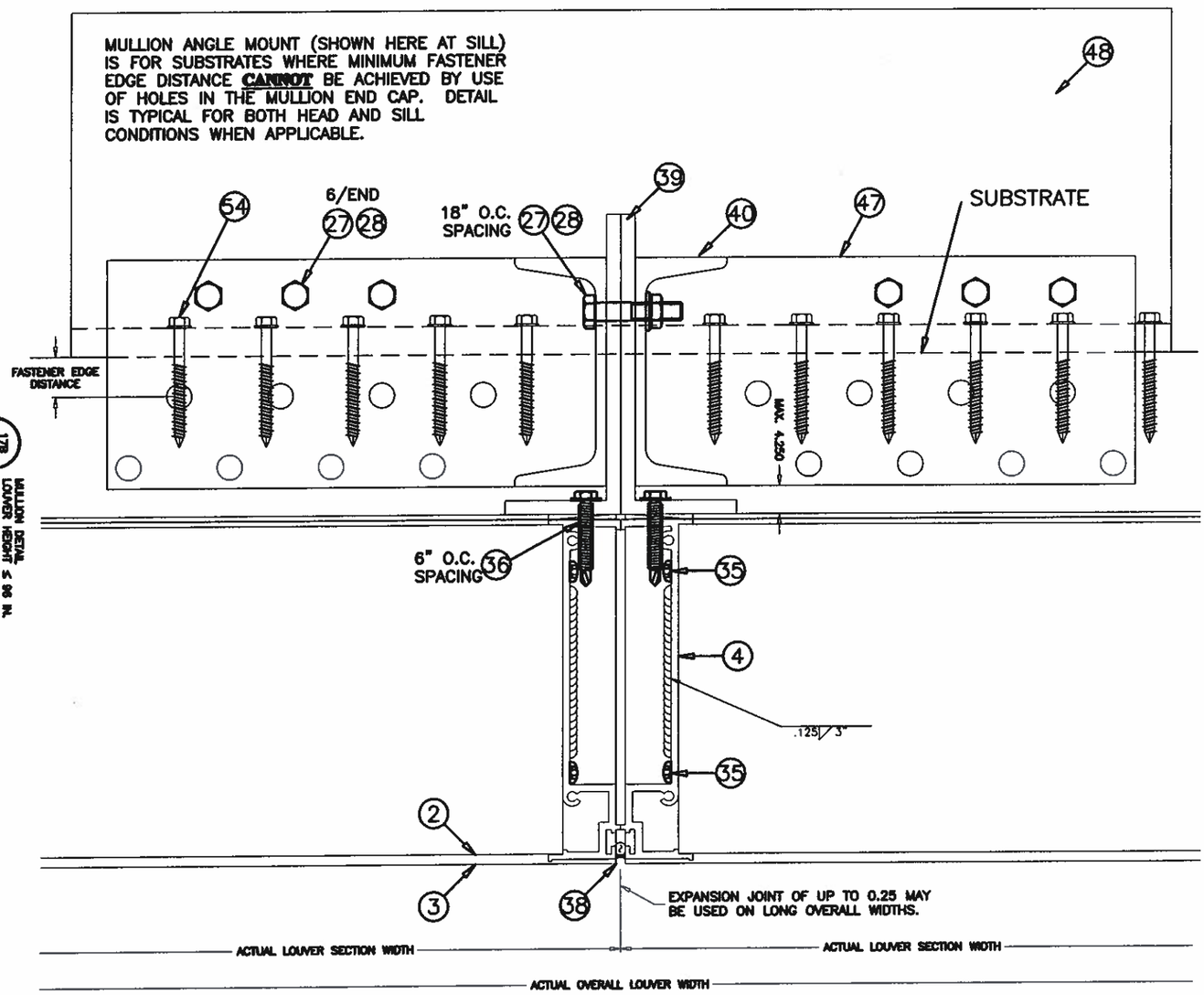

17B 13/22 MULLION DETAIL LOUVER HEIGHT ≤ 96 IN.

RICE ENGINEERING
105 School Creek Trail
Luxemburg, WI 54217
Phone: 920.845.1042
Fax: 920.845.1048
www.rice-inc.com
Texas Firm No: F-2183
L. David Rice
Registration No: 81248

STATE OF TEXAS
L. DAVID RICE
81248
REGISTERED PROFESSIONAL ENGINEER

AUG 29 2013

AIROLITE
The look that works!™
SCHOFIELD, WISCONSIN 54476
715-359-6171

DRAWN BY MES	DATE 8/25/2010
SCALE 1/2.5	
SHEET NO. 13 OF 22	
CAD DRAWING NO. K6746MD	

TITLE
K6746MD LOUVER
CONTINUOUS ANGLE MOUNT

MULLION DETAILS, H≤96"

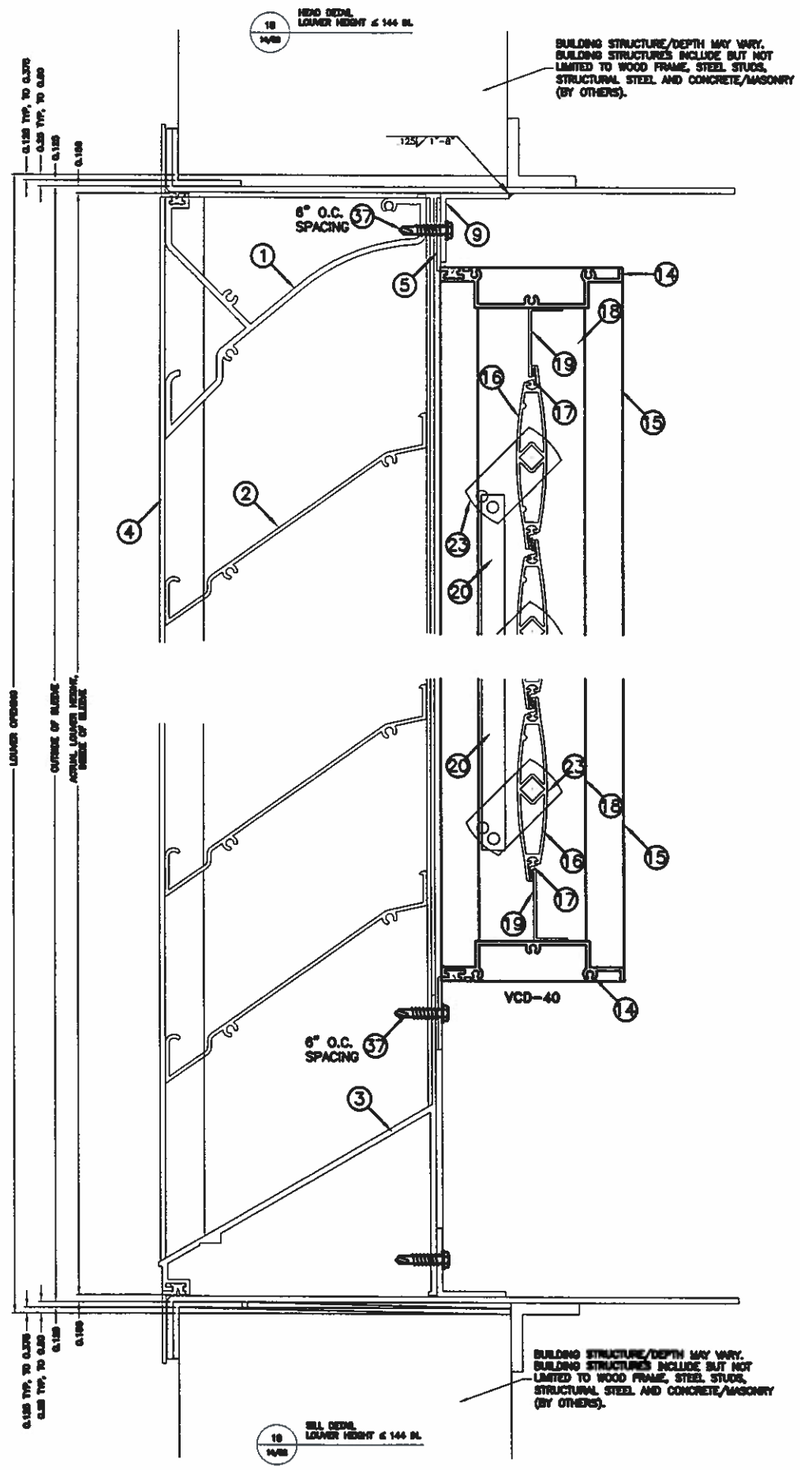

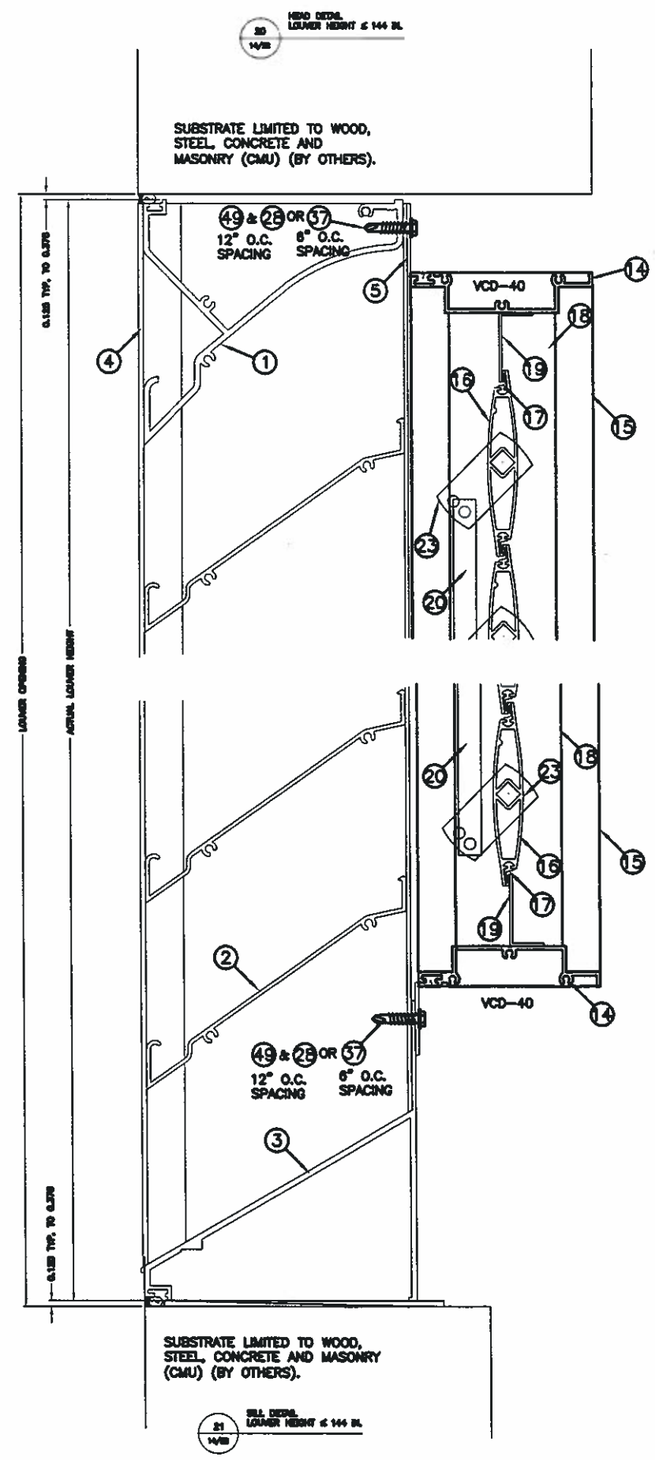

DRAWN BY	MES
DATE	8/25/2010
SCALE	1/3
SHEET NO.	14 OF 22
CAD DRAWING NO.	K6746MD

AIROLITE
The look that works™
SCHOFIELD, WISCONSIN 54476
715-359-6171

TITLE
K6746MD LOUVER W/VCD-40
FLANGE FRAME W/SLEEVE MOUNT,
& CONTINUOUS ANGLE MOUNT
HEAD & SILL DETAILS

RICE ENGINEERING
105 School Creek Trail
Luxemburg, WI 54217
Phone: 920.845.1042
Fax: 920.845.1048
www.rice-inc.com

Texas Firm No: F-2183
L. David Rice
Registration No: 81248

STATE OF TEXAS
L. DAVID RICE
81248
REGISTERED PROFESSIONAL ENGINEER
AUG 29 2013

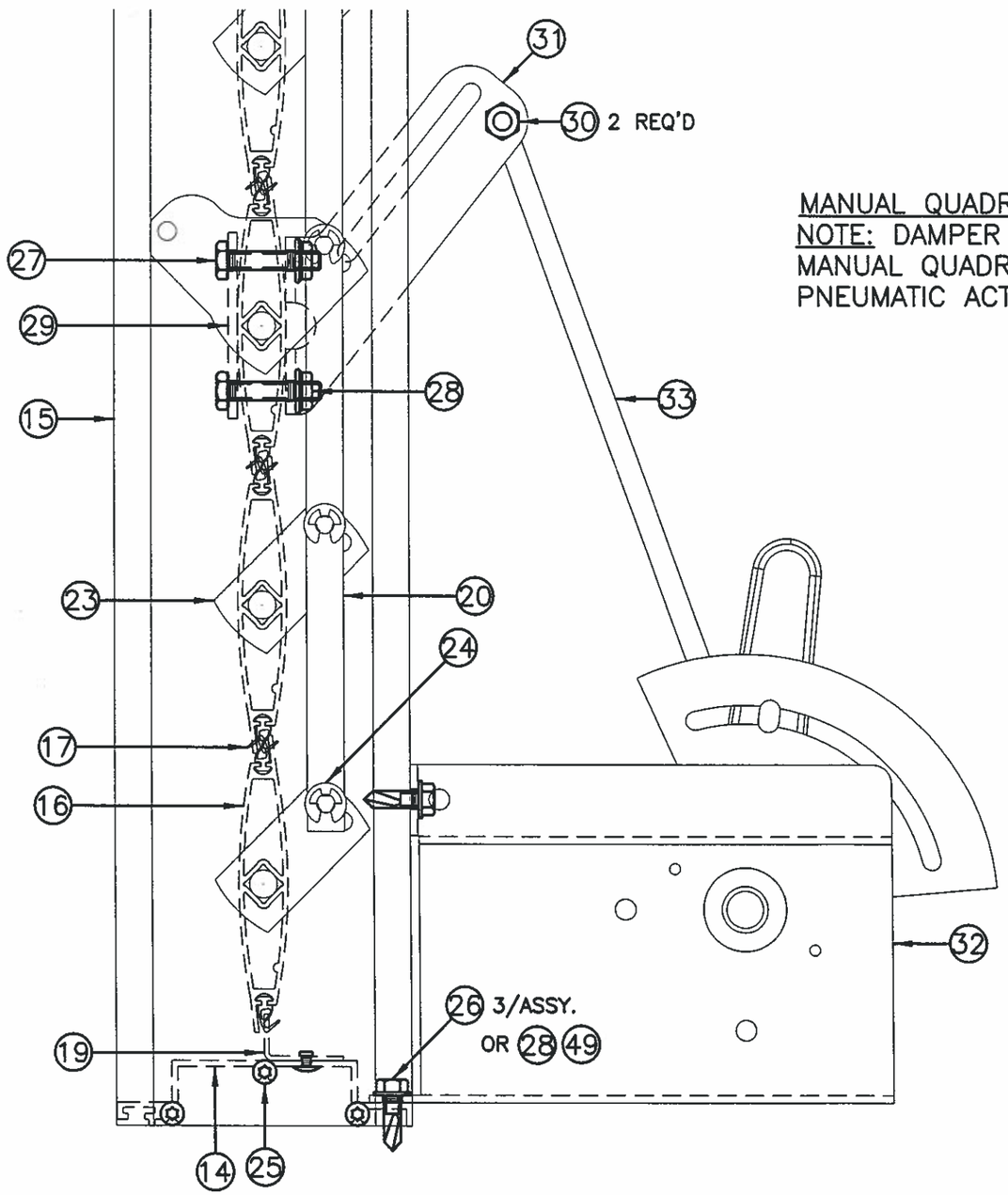

MANUAL QUADRANT ACTUATOR AS SHOWN
NOTE: DAMPER MAY BE OPERATED BY MANUAL QUADRANT, AN ELECTRIC OR PNEUMATIC ACTUATOR.

22
15/22

ACTUATOR DETAIL
LOUVER HEIGHT ≤ 144 IN.

DRAWN BY MES	DATE 8/25/2010
SCALE 1:2	
SHEET NO. 15 OF 22	
CAD DRAWING NO. K6746MD	

AIROLITE
The look that works.™
SCHOFIELD, WISCONSIN 54476
715-359-6171

TITLE VCD-40 DAMPER
MANUAL QUAD ACTUATOR

RICE ENGINEERING
105 School Creek Trail
Luxemburg, WI 54217
Phone: 920.845.1042
Fax: 920.845.1049
www.rice-inc.com

Texas Firm No: F-2183
L. David Rice
Registration No: 81248

STATE OF TEXAS
L. DAVID RICE
81248
REGISTERED PROFESSIONAL ENGINEER

AUG 27 2013

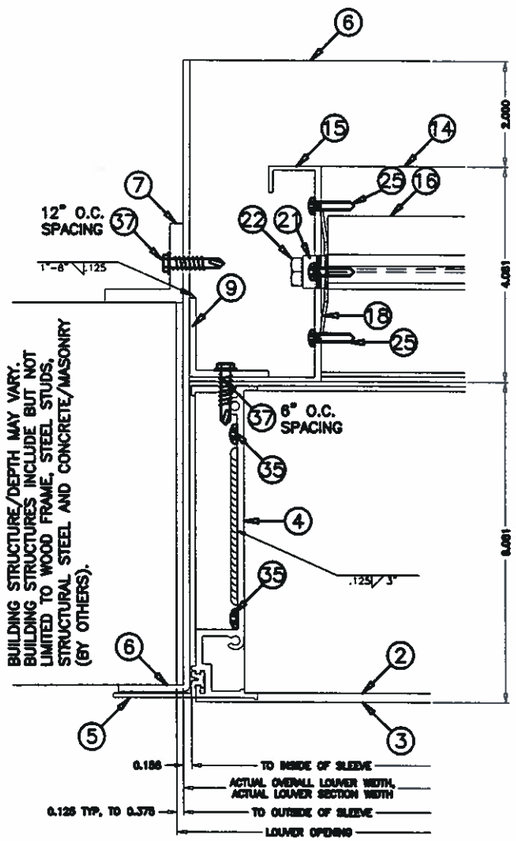

23 H/22 JAMB DETAIL LOUVER HEIGHT ≤ 144 IN.

VCD-40

ESD-635D

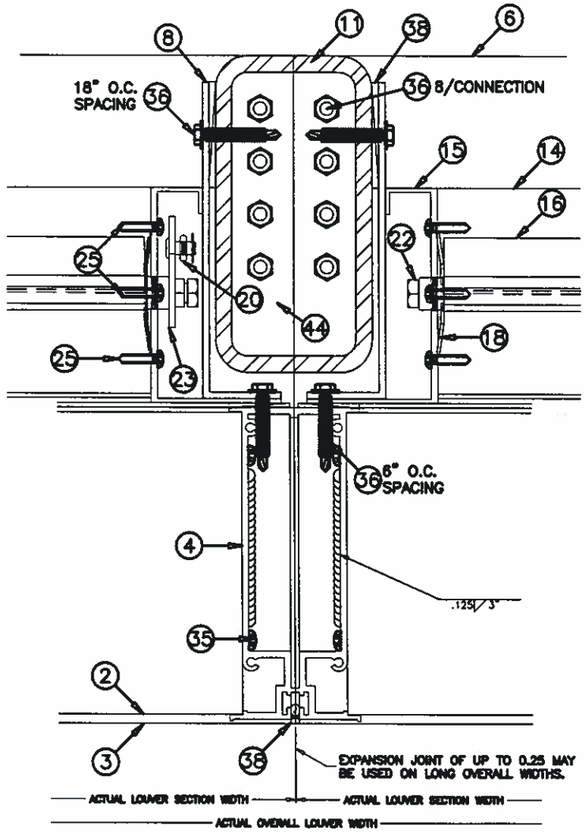

24A H/22 MULLION DETAIL LOUVER HEIGHT ≤ 144 IN.

VCD-40

ESD-635D

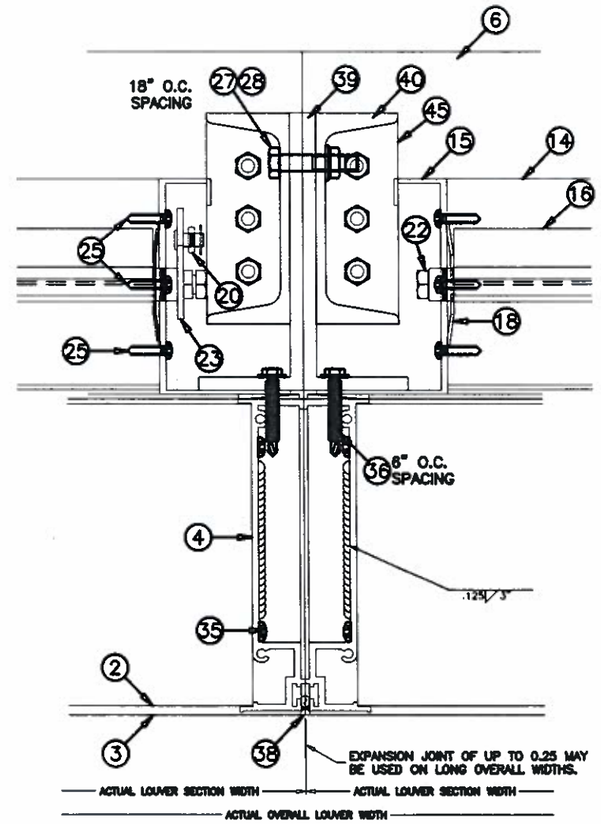

24B H/22 MULLION DETAIL LOUVER HEIGHT ≤ 96 IN.

DRAWN BY MES | DATE 8/25/2010
SCALE 1/3 | SHEET NO. 16 OF 22
CAD DRAWING NO. K6746MD

AIROLITE
The look that works.™
SCHOFIELD, WISCONSIN 54476
715-359-6171

TITLE K6746MD LOUVER W/VCD-40
FLANGE FRAME
SLEEVE MOUNT
JAMB AND MULLION DETAILS

RICE ENGINEERING
105 School Creek Trail
Luxemburg, WI 54217
Phone: 920.845.1042
Fax: 920.845.1049
www.rice-inc.com
Texas Firm No: F-2183
David Rice
Registration No: 81248

STATE OF TEXAS
L. DAVID RICE
81248
REGISTERED PROFESSIONAL ENGINEER

AUG 29 2013

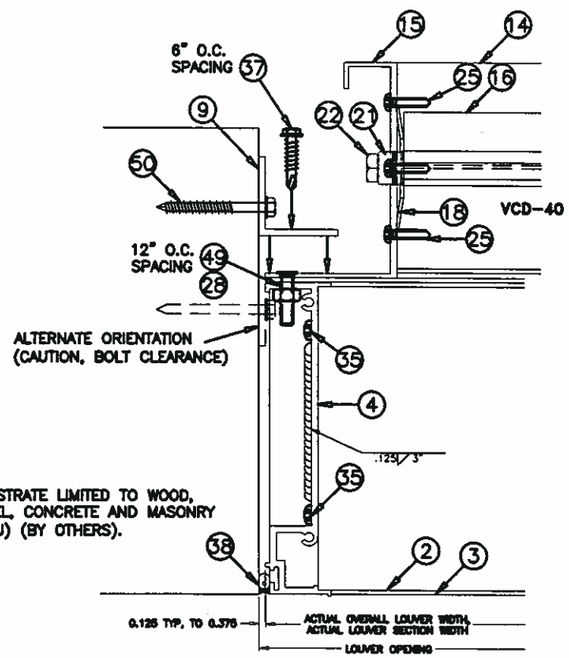

26 / 17/22 JAMB DETAIL. LOUVER HEIGHT ≤ 144 IN.

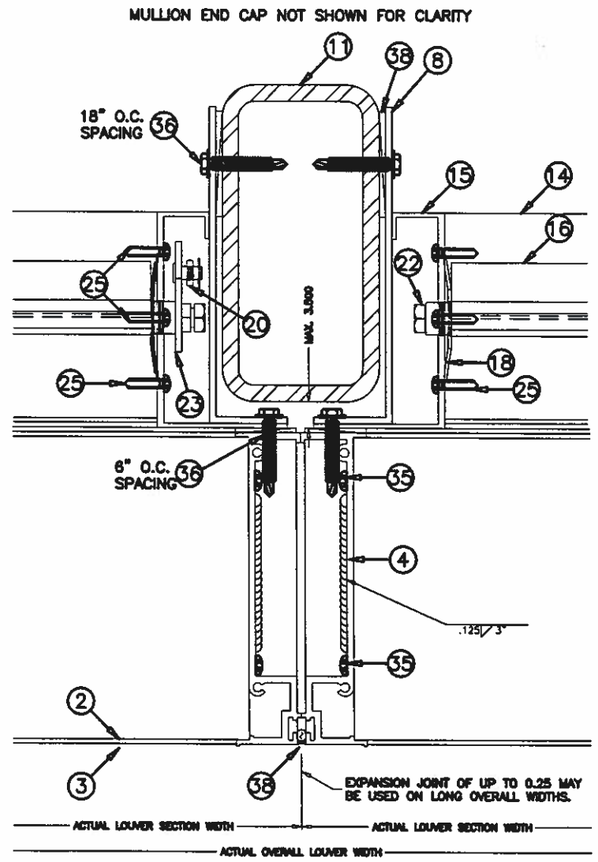

28A / 17/22 MULLION DETAIL. LOUVER HEIGHT ≤ 144 IN.

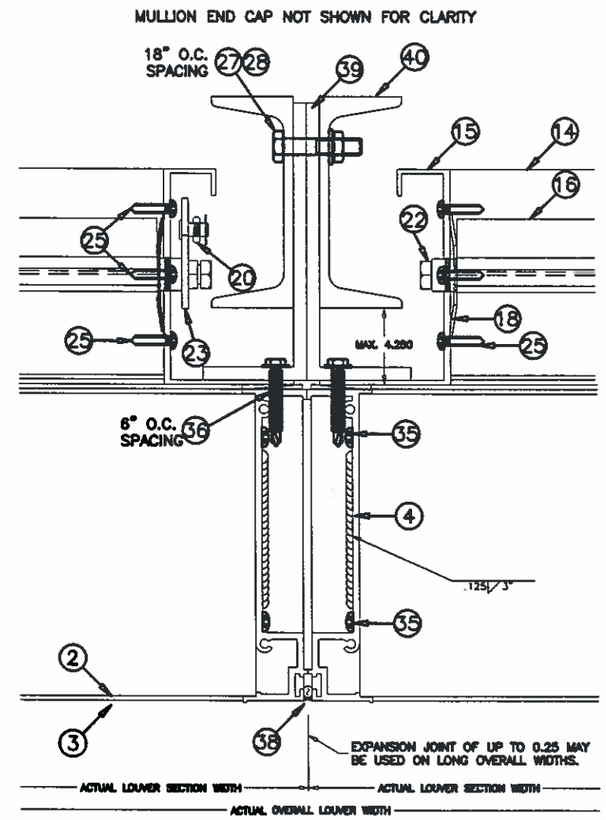

28B / 17/22 MULLION DETAIL. LOUVER HEIGHT ≤ 96 IN.

DRAWN BY MES
DATE 8/25/2010
SCALE 1/3
SHEET NO. 17 OF 22
CAD DRAWING NO. K6746MD

AROLITE
The look that works.™
SCHOFIELD, WISCONSIN 54476
715-359-6171

TITLE K6746MD LOUVER W/VCD-40 CONTINUOUS ANGLE MOUNT JAMB AND MULLION DETAILS

RICE ENGINEERING
105 School Creek Trail
Luxemburg, WI 54217
Phone: 920.845.1042
Fax: 920.845.1048
www.rice-inc.com

Texas Firm No: F-2183
L. David Rice
Registration No: 81248

STATE OF TEXAS
L. DAVID RICE
81248
REGISTERED PROFESSIONAL ENGINEER

AUG 29 2013

NOTES:

1. OTHER SHAPES MAY APPLY PROVIDING THEY ARE SIMILAR TO THOSE SHOWN AND HAVE CORNER CONSTRUCTION AS DESCRIBED ON ALL SHEETS.

2. ALL SHAPED LOUVER PANELS ARE RESTRICTED TO THE SAME PANEL WIDTH AND PRESSURE AS THE RECTANGULAR LOUVER PANELS AND MAY BE STACKED VERTICALLY AND HORIZONTALLY THE SAME AS THE RECTANGULAR PANELS.

3. WHEN SECTIONS EXCEED 36" IN LENGTH BLADE SUPPORT ANGLE AND BRACKETS ARE REQUIRED.

AVAILABLE SHAPES

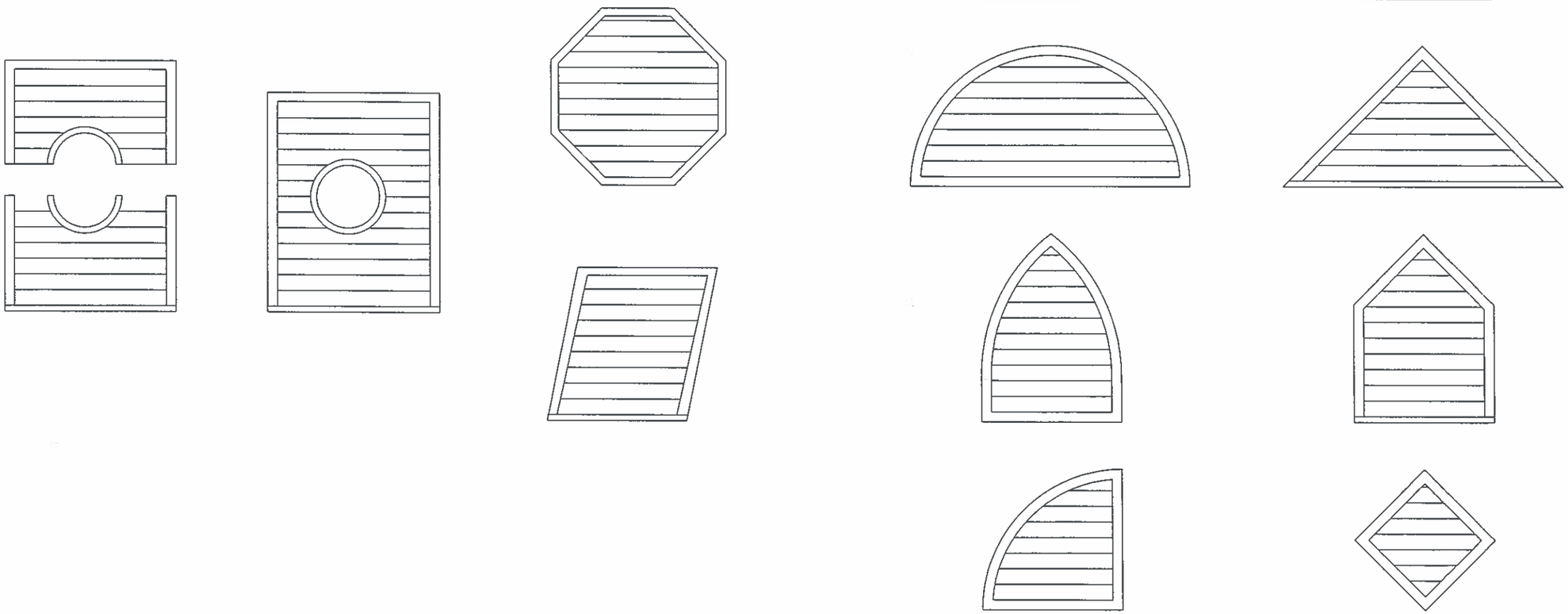

DATE	8/25/2010
DRAWN BY	MES
SCALE	
SHEET NO.	18 OF 22
CAD DRAWING NO.	K6746MD

AIROLITE
The look that works.™
SCHOFIELD, WISCONSIN 54476
715-359-6171

TITLE
K6746MD LOUVER
W/ AND W/O VCD-40
AVAILABLE SHAPES

RICE
ENGINEERING
105 School Creek Trail
Luxemburg, WI 54217
Phone: 920.845.1042
Fax: 920.845.1048
www.rice-inc.com

Texas Firm No: F-2183
L. David Rice
Registration No: 81248

STATE OF TEXAS
L. DAVID RICE
81248
REGISTERED
PROFESSIONAL ENGINEER

AUG 29 2013

*EMBEDMENT DEPTH IS EQUAL TO OVERALL FASTENER LENGTH FOR CONCRETE/CMU FASTENERS. IF SHIMS ARE USED, FASTENER LENGTH MUST BE INCREASED BY THICKNESS OF SHIMS.

ITEM	DESCRIPTION	MATERIAL	NOTES
1	LOUVER HEAD	6063-T5 ALUMINUM	
2	LOUVER BLADE	6063-T5 ALUMINUM	4.0625" MAX. SPACING
3	LOUVER SILL	6063-T5 ALUMINUM	
4	LOUVER JAMB	6063-T5 ALUMINUM	
5	LOUVER/DAMPER FLANGE	6063-T5 ALUMINUM	
6	FORMED SLEEVE	5052-H32 ALUMINUM	1/8" FORMED SLEEVE - DEPTH VARIES
7A	1 1/2 X 1 1/2 X 1/4 ANGLE	6063-T5 ALUMINUM	BLADE SUPPORT ANGLE
7B	1 1/2 X 1 1/2 X 1/4 ANGLE	6063-T5 ALUMINUM	USED AT HEAD/SILL/JAMB OF SLEEVE
8	1 1/2 X 6 X 1/8 ANGLE	6063-T5 ALUMINUM	JAMB ANGLE
9	1 1/2 X 1 1/2 X 1/8 ANGLE	6063-T5 ALUMINUM	USED AT HEAD/SILL/JAMBS OF LOUVER
10	1 1/2 X 1 1/2 X 1/8 ANGLE	6063-T5 ALUMINUM	USED AT HEAD & SILL OF SLEEVE
11	3 X 6 X 5/16 STEEL TUBE	A36 STEEL	SHIP LOOSE
12	4 X 6 X 1/4 ALUM. SHIMS	5052-H32 ALUMINUM	USED AT SILL FOR SUPPORT ANGLE
13	BLADE BRACKET	6063-T5 ALUMINUM	4.5" LONG
14	DAMPER HEAD/SILL	6063-T5 ALUMINUM	
15	DAMPER JAMB	6063-T5 ALUMINUM	
16	DAMPER BLADE	6063-T5 ALUMINUM	3.75 MAX. SPACING
17	DAMPER BLADE SEAL	SILICONE/RUBBER TYPE	MATERIAL VARIES
18	DAMPER JAMB SEAL	SS	
19	DAMPER TOP/BOTTOM CLOSURE	ALUMINUM	
20A	DAMPER LINKAGE BAR	GALV. STEEL	
20B	DAMPER LINKAGE BAR	SS	
21A	DAMPER AXLE BUSHING	DELRIN	
21B	DAMPER AXLE BUSHING	BRONZE	
21C	DAMPER AXLE BUSHING	SS	
22A	NON-DRIVE DAMPER AXLE ASST.	ZC STEEL PIN W/DELRIN BUSHING	
22B	NON-DRIVE DAMPER AXLE ASST.	ZC STEEL PIN W/BRONZE BUSHING	
22C	NON-DRIVE DAMPER AXLE ASST.	ZC STEEL PIN W/ SS BUSHING	
22D	NON-DRIVE DAMPER AXLE ASST.	SS PIN W/ DELRIN BUSHING	
22E	NON-DRIVE DAMPER AXLE ASST.	SS PIN W/ BRONZE BUSHING	
22F	NON-DRIVE DAMPER AXLE ASST.	SS PIN W/ SS BUSHING	
23A	DRIVE SIDE DAMPER AXLE ASST.	ZC/GALV. STEEL	
23B	DRIVE SIDE DAMPER AXLE ASST.	SS	
24A	1/4 DIA. E-CLIP	ZP	
24B	1/4 DIA. E-CLIP	SS	
25	#8 X .75 TPH TYPE AB SMS	SS	
26	#14 X .75 TEK	ZP	
27A	1/4-20 X 1.25 HH CS	ZP	
27B	1/4-20 X 1.5 HH CS	SS	
27C	1/4-20 X 0.75 HH CS	SS	
28A	1/4-20 NUT	ZP	
28B	1/4-20 NUT	SS	
29	REINFORCING STRAP	18-8 SS	
30	1/4-20 X .562 BALL SWIVEL	ZP	
31A	DAMPER BLADE DRIVE LEVER	SS	
31B	DAMPER BLADE DRIVE LEVER	GALV. STEEL	
32	DAMPER MANUAL QUAD ASSY.		
33	5/16 DIA. LINKAGE ROD	ZP	
34	#12-14 X 3/4" TPH SMS 18-8 SS	18-8 SS	
35	#10 X 1 1/4" SMS 316 SS	316 SS	
36	1/4" DIA. SCREW	SS	1 1/2" LONG
37	1/4" DIA. SCREW	SS	1" LONG
38A	DEAD LOAD SHIMS		NOT BY GREENHECK
38B	SEALANT AND BACKER ROD		NOT BY GREENHECK
39	5 1/4 X 2 X 1/4 ANGLE	6063-T5 ALUMINUM	USED AT JAMB OF LOUVER/SLEEVE
40	4" CHANNEL	6061-T6 ALUMINUM	USED AT JAMB OF LOUVER/SLEEVE
41	MULLION SLEEVE BRACKET	5052-H32 ALUMINUM	
42	1 1/4 X 1 1/4 X 1/8 ANGLE	6063-T5 ALUMINUM	MIN SIZE, JAMB ATTACHMENT ANGLE
43	BLADE SUPPORT, ALTERNATE	6063-T5 ALUMINUM	ALTERNATE STYLE
44	STEEL MULLION END CAP (SM)	STEEL	FACTORY WELDED TO MULLION
45	ALUMINUM MULLION END CAP (SM)	5052-H32 ALUMINUM	FACTORY WELDED TO MULLION
46	STEEL MULLION END CAP (LG)	STEEL	FACTORY WELDED TO MULLION
47	ALUM MULLION END CAP (LG)	5052-H32 ALUMINUM	FACTORY WELDED TO MULLION
48	MULLION MOUNTING ANG. BRACKET	STEEL 36 KSI, OR 6061-T6	MULLION MOUNTING ANGLE, H≤144
49	1/4" DIA. THREAD STUD	SS OR PLATED STEEL	1/2" MIN. LONG

ITEM	CONCRETE	CMU	STEEL	WOOD	MIN.	FASTENER TYPE	ALL FASTENERS ARE STEEL OR STAINLESS					
50	JAMB PERIMETER ANGLE FASTENER, HEIGHT <=144						DIAMETER	# RQD.	CENTERS	EDGE	EMBED.*	
50A	X				2KSI	"POWERS WEDGE BOLT"	3/8	VARIES	6.00	1.215	3.500	
50B	X				4KSI	"POWERS WEDGE BOLT"	3/8	VARIES	6.00	1.215	3.500	
50C	X				2KSI	SCOTS TAPCON / TAPCON	1/4	VARIES	4.75	1.500	1.750	
50D	X				4KSI	SCOTS TAPCON / TAPCON	1/4	VARIES	6.00	1.500	1.750	
50E		X			1.5KSI	SCOTS TAPCON / TAPCON	1/4	VARIES	3.00	1.500	1.750	
50F			X		65KSI Fy	BOLT/NUT OR TAPPING SCREW	1/4	VARIES	6.00	0.500	0.125	
50G				X	SG 0.42	LAG	3/8	VARIES	6.00	1.500	2.375	
51	MULLION END PLATE FASTENER, HEIGHT <=144						DIAMETER	# RQD.	CENTERS	EDGE	EMBED.*	
51A	X				2KSI	"POWERS WEDGE BOLT"	3/8	8/END	1.50	1.75	3.500	
51B	X				4KSI	"POWERS WEDGE BOLT"	3/8	8/END	1.50	1.75	3.500	
51C	X				2KSI	SCOTS TAPCON / TAPCON	1/4	9/END	2.00	1.50	1.625	
51D	X				4KSI	SCOTS TAPCON / TAPCON	1/4	8/END	2.00	1.50	1.625	
51E			X		65KSI Fy	BOLT/NUT OR TAPPING SCREW	1/4	8/END	1.00	0.50	0.125	
51F				X	SG 0.42	LAG	3/8	7/END	1.50	1.75	2.375	GROUP
52	MULLION ANGLE MOUNT FASTENER, HEIGHT <=144						DIAMETER	# RQD.	CENTERS	EDGE	EMBED.*	CENTER
52A	X				2KSI	"POWERS WEDGE BOLT"	3/8	12/ANG.	3.375	2.250	3.500	3.766
52B	X				4KSI	"POWERS WEDGE BOLT"	3/8	9/ANG.	3.375	2.250	3.500	3.766
52C	X				2KSI	SCOTS TAPCON / TAPCON	1/4	32/ANG.	2.000	1.500	1.750	3.375
52D	X				4KSI	SCOTS TAPCON / TAPCON	1/4	27/ANG.	2.000	1.500	1.750	3.375
52E		X			1.5KSI	SCOTS TAPCON / TAPCON	1/4	32/ANG.	2.000	1.500	1.750	3.375
52F			X		65KSI Fy	BOLT/NUT OR TAPPING SCREW	1/4	16/ANG.	1.000	0.500	0.125	3.000
52G			X		65KSI Fy	BOLT/NUT OR TAPPING SCREW	1/4	11/ANG.	1.000	0.500	0.188	3.000
52H			X		65KSI Fy	BOLT/NUT OR TAPPING SCREW	1/4	16/ANG.	1.000	0.500	0.188	3.766
52I			X		65KSI Fy	BOLT/NUT OR TAPPING SCREW	5/16	12/ANG.	1.000	0.625	0.125	3.000
52J			X		65KSI Fy	BOLT/NUT OR TAPPING SCREW	5/16	16/ANG.	1.000	0.625	0.125	3.766
52K				X	SG 0.42	LAG	3/8	16/ANG.	1.500	1.500	2.875	3.766
52L				X	SG 0.42	LAG	3/8	11/ANG.	1.500	1.500	2.875	3.000
53	MULLION END PLATE FASTENER, HEIGHT <=96						DIAMETER	# RQD.	CENTERS	EDGE	EMBED.*	
53A	X				2KSI	"POWERS WEDGE BOLT"	3/8	5/CAP	1.50	1.6	3.500	
53B	X				4KSI	"POWERS WEDGE BOLT"	3/8	5/CAP	1.50	1.6	3.500	
53C	X				2KSI	"POWERS WEDGE BOLT"	3/8	5/CAP	2.00	1.75	3.500	
53D	X				4KSI	"POWERS WEDGE BOLT"	3/8	5/CAP	2.00	1.75	3.500	
53E	X				2KSI	SCOTS TAPCON / TAPCON	1/4	6/CAP	2.00	1.50	1.750	
53F	X				4KSI	SCOTS TAPCON / TAPCON	1/4	6/CAP	2.00	1.50	1.750	
53G			X		65KSI Fy	BOLT/NUT OR TAPPING SCREW	1/4	3/CAP	1.00	0.50	0.125	
53H				X	SG 0.42	LAG	3/8	5/CAP	1.50	1.75	2.375	GROUP
54	MULLION ANGLE MOUNT FASTENER, H<=96						DIAMETER	# RQD.	CENTERS	EDGE	EMBED.*	CENTER
54A	X				2KSI	"POWERS WEDGE BOLT"	3/8	4/ANG.	3.375	2.25	3.500	3.766
54B	X				4KSI	"POWERS WEDGE BOLT"	3/8	3/ANG.	3.375	2.25	3.500	3.766
54C	X				2KSI	SCOTS TAPCON / TAPCON	1/4	11/ANG.	2.000	1.50	1.750	3.375
54D	X				4KSI	SCOTS TAPCON / TAPCON	1/4	9/ANG.	2.000	1.50	1.750	3.375
54E		X			1.5KSI	SCOTS TAPCON / TAPCON	1/4	11/ANG.	2.000	1.50	1.750	3.375
54F			X		65KSI Fy	BOLT/NUT OR TAPPING SCREW	1/4	7/ANG.	1.000	0.50	0.125	3.766
54G			X		65KSI Fy	BOLT/NUT OR TAPPING SCREW	1/4	6/ANG.	1.000	0.50	0.125	3.000
54H				X	SG 0.42	LAG	3/8	5/ANG.	1.500	1.50	2.875	3.766
54I				X	SG 0.42	LAG	3/8	4/ANG.	1.500	1.50	2.875	3.000

GENERAL NOTES:

1. IT SHALL BE THE RESPONSIBILITY OF THE PERMIT HOLDER TO VERIFY THE STRUCTURAL INTEGRITY OF THE EXISTING STRUCTURE TO SUPPORT THE LOADS IMPOSED BY THE LOUVER(S).
2. THE K6746MD AND K6746MD WITH VCD-40 HAVE BEEN DESIGNED AND TESTED IN ACCORDANCE WITH THE FLORIDA BUILDING CODE (FBC) AND TEST PROTOCOLS TAS-201 (IMPACT), TAS-202 (UNIFORM STATIC PRESSURE), AND TAS-203 (CYCLIC FATIGUE).
3. MAXIMUM SINGLE SECTION SIZE IS 72" WIDE X 144" HIGH.
4. MAXIMUM ASSEMBLED LOUVER SIZE IS UNLIMITED WIDE X 144" HIGH.
5. SECTIONS OR ASSEMBLIES MAY BE STACKED VERTICALLY PROVIDING A SUITABLE STRUCTURAL SUPPORT IS DESIGNED AND INSTALLED BY OTHERS TO SUPPORT ALL LOADS TRANSFERRED FROM THE LOUVER.
6. CMU SHALL BE ASTM C90, TYPE II, 2,000 MIN PSI GROUT-FILLED.
7. THE SLEEVE MOUNT STYLE LOUVER UTILIZES AN ANCHORLESS INSTALLATION METHOD THAT DOES NOT REQUIRE THE USE OF FASTENERS INTO THE SUBSTRATE. IT MAY BE INSTALLED IN ANY SUBSTRATE THAT WILL WITHSTAND THE LOADS TRANSFERRED TO IT BY THE LOUVER. AIROLITE DOES NOT DETERMINE THE STRUCTURAL INTEGRITY OF THE SUBSTRATE STRUCTURE.
8. THE CONTINUOUS ANGLE MOUNT STYLE UTILIZES A CONTINUOUS JAMB ANGLE THAT IS ATTACHED TO THE SUBSTRATE BY FASTENERS. IT MAY BE INSTALLED IN CONCRETE, CMU, STEEL, OR WOOD ACCORDING TO THE FASTENER SCHEDULE. AIROLITE DOES NOT DETERMINE THE STRUCTURAL INTEGRITY OF THE SUBSTRATE STRUCTURE.
9. LOUVER ASSEMBLY IS QUALIFIED FOR A MAXIMUM DESIGN LOAD OF +/- 150 PSF.
10. LOUVER ASSEMBLY WITH AND WITHOUT VCD-40 DAMPER SHALL ONLY BE INSTALLED IN A LOCATION WHERE THE ROOM BEHIND THE LOUVER IS DESIGNED TO DRAIN WATER PENETRATING INTO THE ROOM AND THE ROOM WILL HOUSE WATER RESISTANT/WATER PROOF EQUIPMENT, COMPONENTS, AND/OR SUPPLIES.
11. INSTALLER TO PROVIDE SEPARATION OF DISSIMILAR MATERIALS AS REQUIRED.
12. THE VCD-40 MAY BE OPERATED BY A MANUAL QUADRANT OR BY AN ELECTRIC OR PNEUMATIC ACTUATOR. THE DAMPER'S ACTUATOR IS NOT PART OF THIS APPROVAL, BUT SHALL BE CERTIFIED BY AN INDEPENDENT TESTING AGENCY.
13. FRAME CONSTRUCTION. HEAD AND SILL ARE SQUARE CUT. JAMBS ARE SQUARE CUT @ HEAD AND MITERED @ SILL. CORNERS ARE SECURED WITH (2) #10x1-1/4 SMS. BLADES ARE SECURED TO JAMBS WITH (2) #10x1-1/4 SMS AND WELDED @ EACH END.
14. STEEL/STAINLESS-STEEL/ALUMINUM PARTS MAY BE MADE OUT OF ALTERNATE ALLOY THAT HAS EQUAL OR GREATER YIELD STRENGTH.
15. BLADE SUPPORT ANGLE AND BLADE SUPPORT BRACKETS ONLY REQUIRED WHEN ACTUAL LOUVER SECTION WIDTH IS GREATER THAN 36 INCHES.

DATE 8/25/2010

DRAWN BY MES

SCALE

SHEET NO. 19 OF 22

CAD DRAWING NO. K6746MD

AIROLITE
The look that works.™
SCHOFIELD, WISCONSIN 54476
715-359-6171

TITLE
K6746MD LOUVER
W/ AND W/O VCD-40
SLEEVE/CONTINUOUS MOUNT
NOTES/BILL OF MATERIAL

RICE ENGINEERING
105 School Creek Trail
Luxemburg, WI 54217
Phone: 920.845.1042
Fax: 920.845.1048
www.rice-inc.com

Texas Firm No: F-2183
L. David Rice
Registration No: 81248

STATE OF TEXAS
L. DAVID RICE
81248
REGISTERED PROFESSIONAL ENGINEER

AUG 29 2013

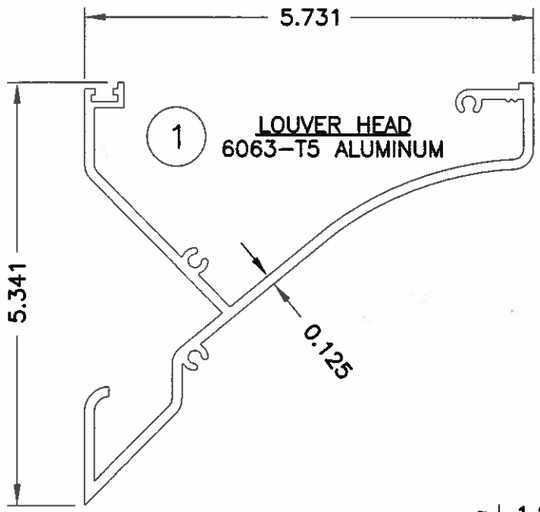

1 LOUVER HEAD
6063-T5 ALUMINUM

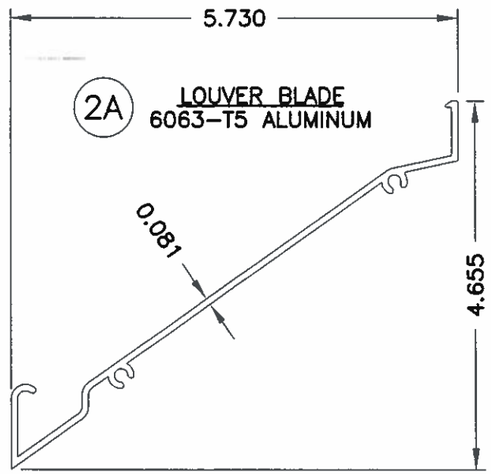

2A LOUVER BLADE
6063-T5 ALUMINUM

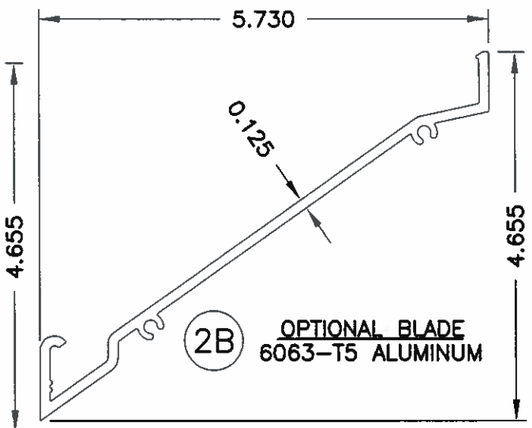

2B OPTIONAL BLADE
6063-T5 ALUMINUM

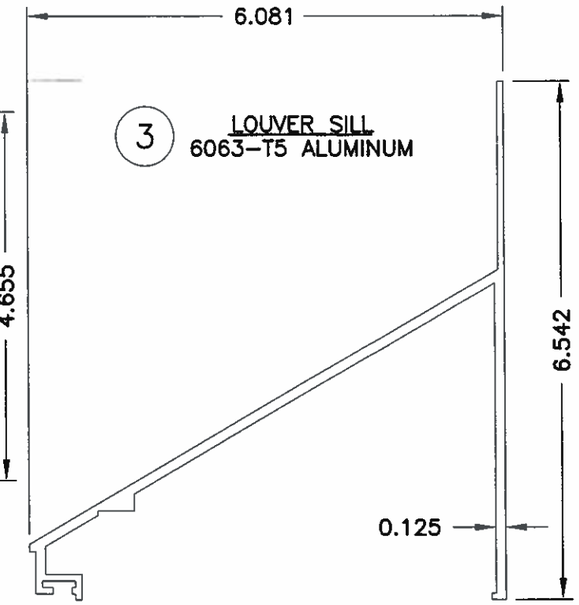

3 LOUVER SILL
6063-T5 ALUMINUM

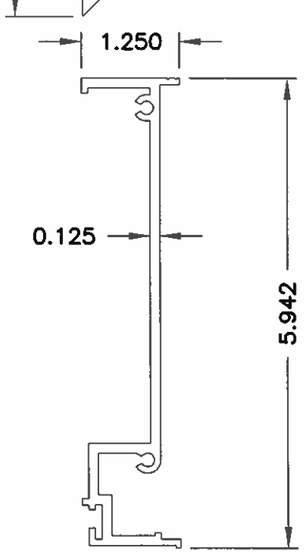

4A LOUVER JAMB
6063-T5 ALUMINUM

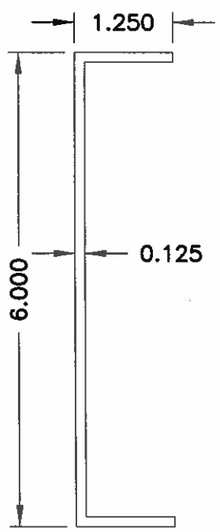

4B OPTIONAL JAMB
6063-T5 ALUMINUM

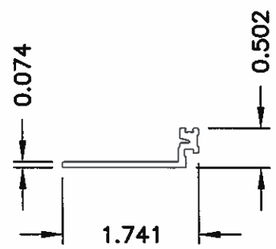

5 LOUVER/DAMPER FLANGE
6063-T5 ALUMINUM

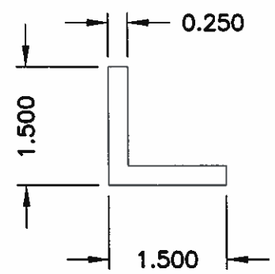

7 LOUVER BLADE SUPPORT/SLEEVE MOUNT ANGLE
6063-T5 ALUMINUM

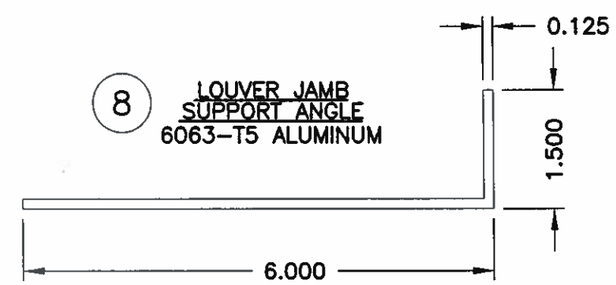

8 LOUVER JAMB SUPPORT ANGLE
6063-T5 ALUMINUM

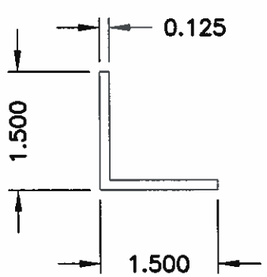

9 LOUVER SLEEVE ATTACHMENT ANGLE
6063-T5 ALUMINUM

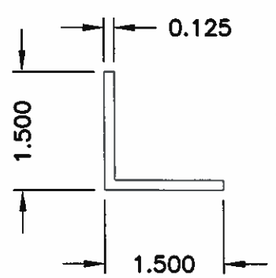

10 LOUVER SLEEVE FLANGE SUPPORT ANGLE
6063-T5 ALUMINUM

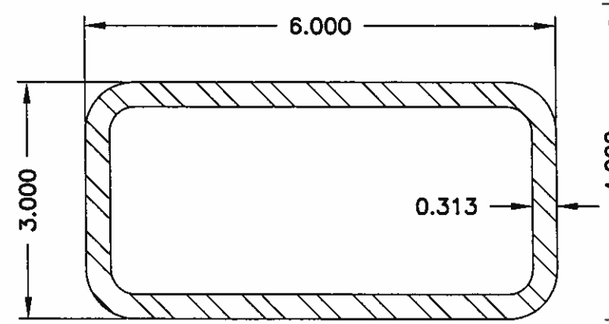

11 STEEL TUBE
A36

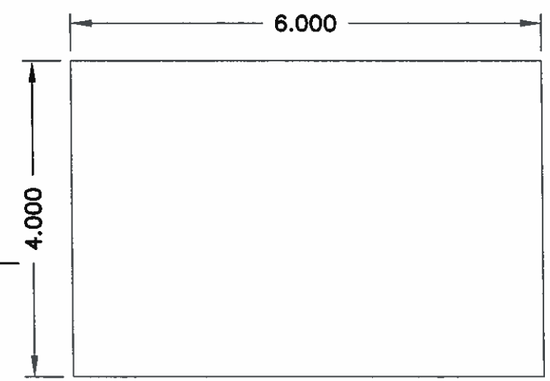

12 ALUMINUM SUPPORT SHIM
5052-H32 ALUMINUM

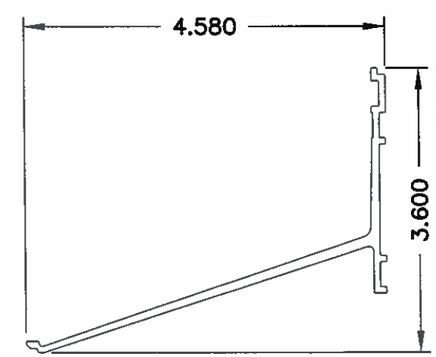

13 LOUVER BLADE BRACKET
6063-T5 ALUMINUM

DATE 8/25/2010
DRAWN BY MES
SCALE 1:2
SHEET NO. 20 OF 22
CAD DRAWING NO. K6746MD

AIROLITE
The look that works.™
SCHOFIELD, WISCONSIN 54476
715-359-6171

TITLE K6746MD LOUVER SLEEVE/CONTINUOUS MOUNT W/ AND W/O VCD-40 PART PROFILES

RICE ENGINEERING
105 School Creek Trail
Luxemburg, WI 54217
Phone: 920.845.1042
Fax: 920.845.1048
www.rice-inc.com
Texas Firm No: F-2183
Louis Rice
Registration No: 81248

STATE OF TEXAS
L. DAVID RICE
81248
PROFESSIONAL ENGINEER
REGISTERED

AUG 29 2013

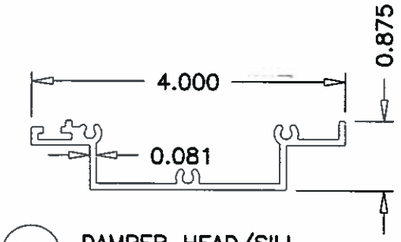

14 DAMPER HEAD/SILL
6063-T5 ALUMINUM

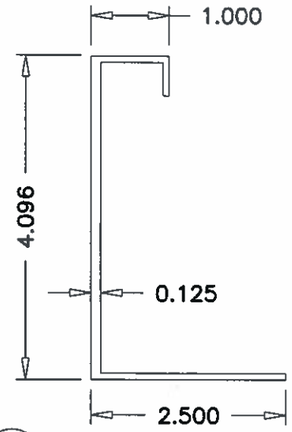

15 DAMPER JAMB
6063-T5 ALUMINUM

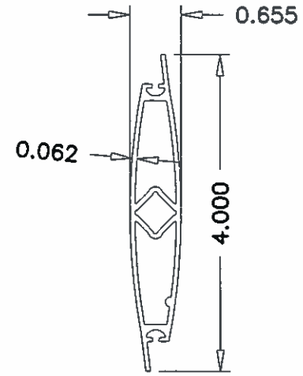

16 DAMPER BLADE
6063-T5 ALUMINUM

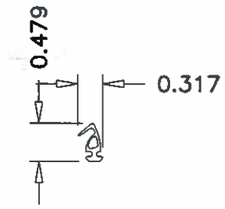

17 DAMPER BLADE SEAL
MATERIAL VARIES

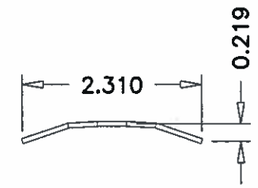

18 DAMPER JAMB SEAL
.007" SS

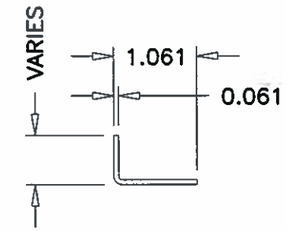

19 DAMPER TOP/BOTTOM
CLOSURE
ALUMINUM

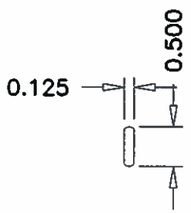

20 DAMPER LINKAGE BAR
MATERIAL VARIES

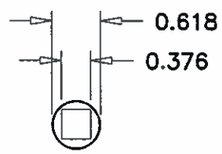

21 DAMPER AXLE BUSHING (.445" LG.)
MATERIAL VARIES

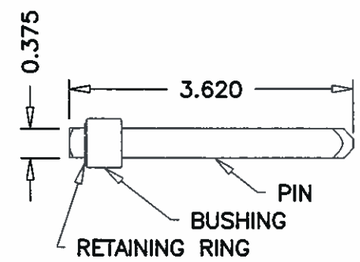

22 NON-DRIVE DAMPER AXLE ASSY.
MATERIAL VARIES

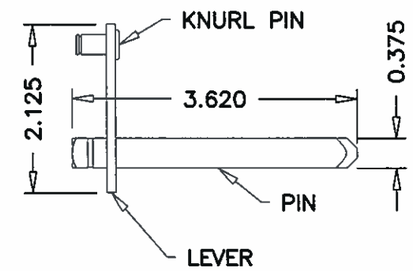

23 DRIVE-SIDE DAMPER AXLE ASSY.
MATERIAL VARIES

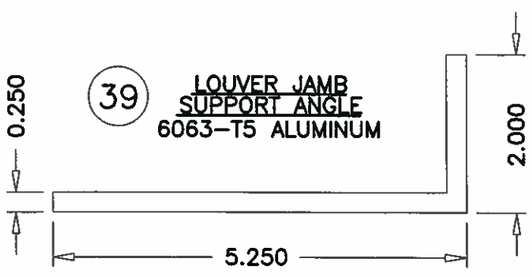

39 LOUVER JAMB
SUPPORT ANGLE
6063-T5 ALUMINUM

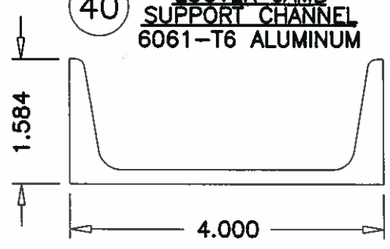

40 LOUVER JAMB
SUPPORT CHANNEL
6061-T6 ALUMINUM

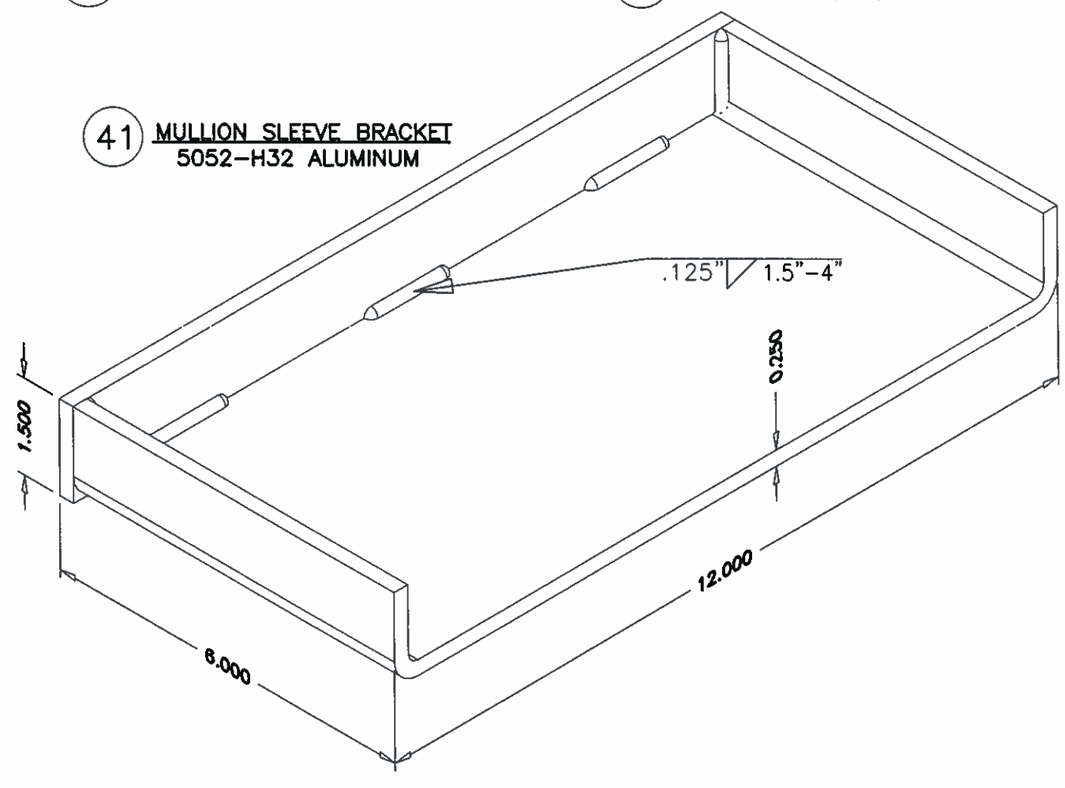

41 MULLION SLEEVE BRACKET
5052-H32 ALUMINUM

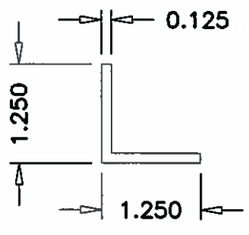

42 LOUVER JAMB
ATTACHMENT ANGLE
6063-T5 ALUMINUM

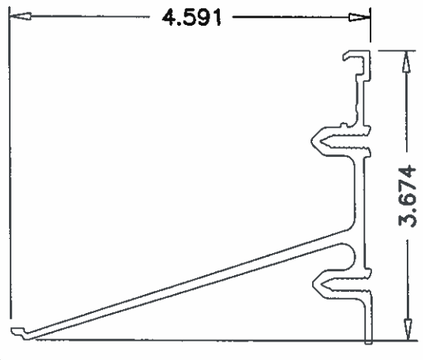

43 ALTERNATE LOUVER BLADE BRACKET
6063-T5 ALUMINUM

DRAWN BY MES
DATE 8/25/2010
SCALE 1:2
SHEET NO. 21 OF 22
CAD DRAWING NO. K6746MD

AIROLITE
The look that works™
SCHOFIELD, WISCONSIN 54476
715-359-6171

TITLE
K6746MD LOUVER
SLEEVE/CONTINUOUS MOUNT
W/ AND W/O VCD-40
PART PROFILES

RICE ENGINEERING
105 School Creek Trail
Luxemburg, WI 54217
Phone: 920.845.1042
Fax: 920.845.1048
www.rice-inc.com

Texas Firm No: F-2183
L. David Rice
Registration No: 81248

STATE OF TEXAS
L. DAVID RICE
81248
REGISTERED PROFESSIONAL ENGINEER

AUG 29 2013

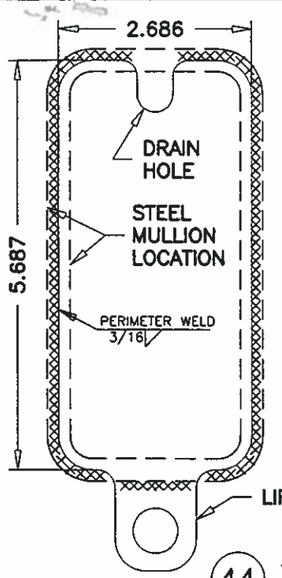

44 STEEL MULLION END CAP FOR SLEEVE MOUNT 0.313 STEEL

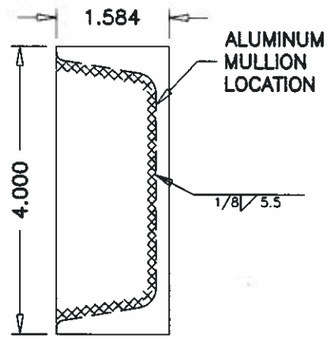

45 ALUMINUM MULLION END CAP FOR SLEEVE MOUNT 5052-H32, 0.25 ALUMINUM

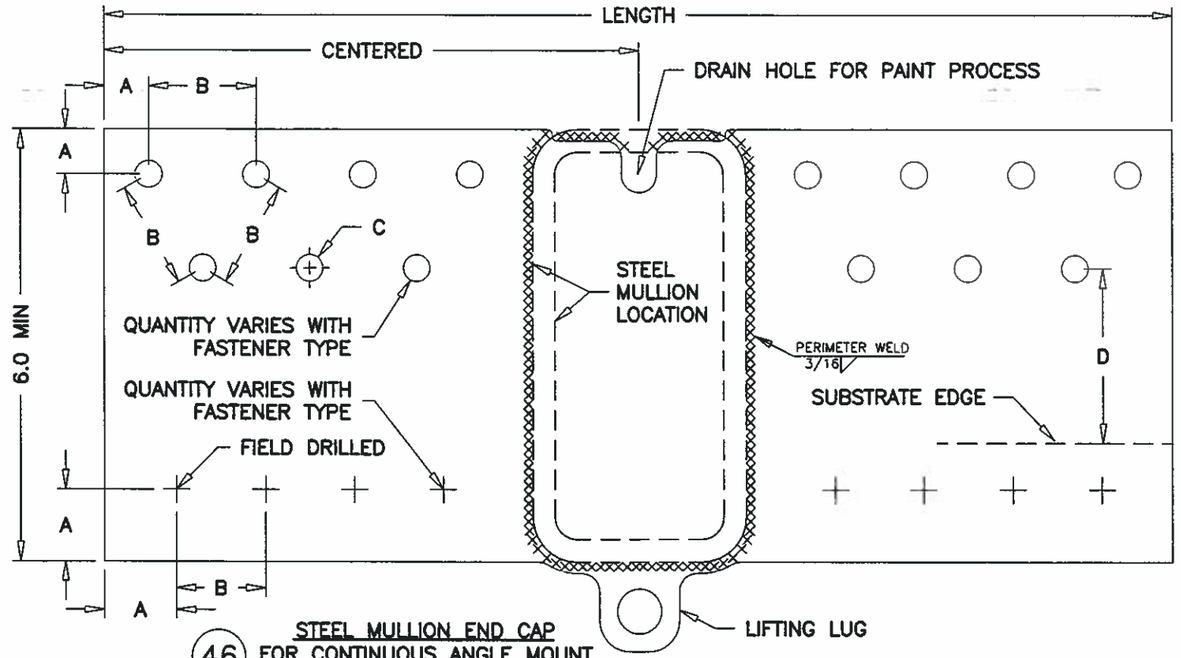

46 STEEL MULLION END CAP FOR CONTINUOUS ANGLE MOUNT 0.313 STEEL

DIM.	DESCRIPTION
A	≥0.375/0.50 FOR 1/4ø FASTENER IN ALUMINUM/STEEL
A	≥0.563/0.75 FOR 3/8ø FASTENER IN ALUMINUM/STEEL
B	≥FASTENER SPACING DISTANCE
C	≥FASTENER CLEARANCE HOLE DIAMETER
D	≥FASTENER SUBSTRATE EDGE DISTANCE
GROUP CENTER = CENTER OF FASTENER HOLE PATTERN	

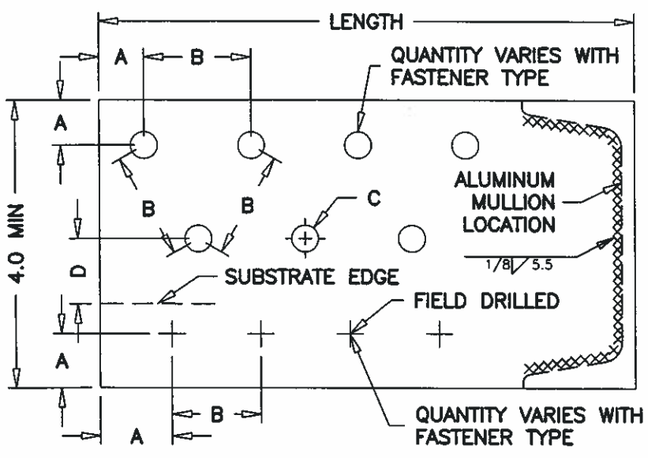

47 ALUMINUM MULLION END CAP FOR CONTINUOUS ANGLE MOUNT 5052-H32, 0.25 ALUMINUM

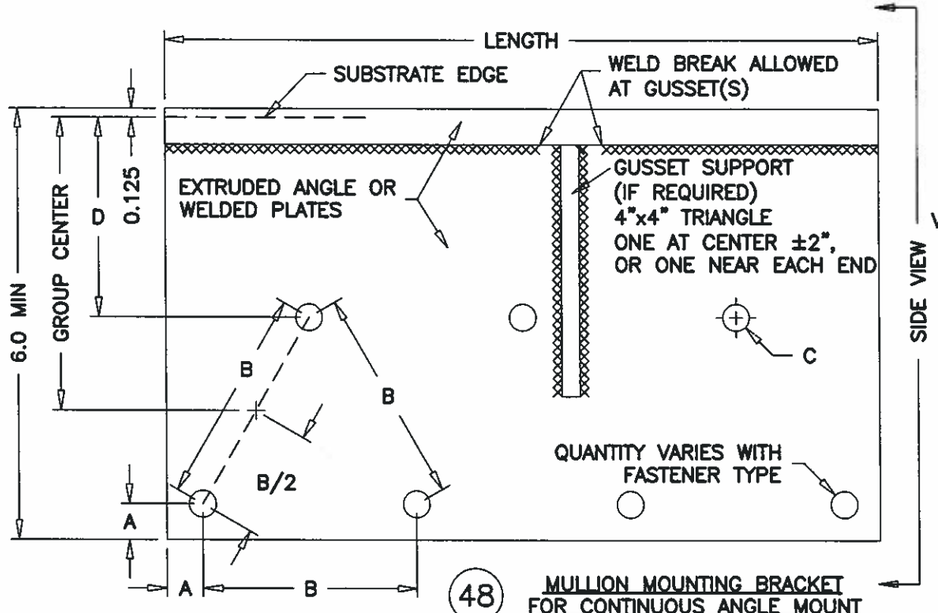

48 MULLION MOUNTING BRACKET FOR CONTINUOUS ANGLE MOUNT VARIES, SEE B.O.M. & TABLES BELOW

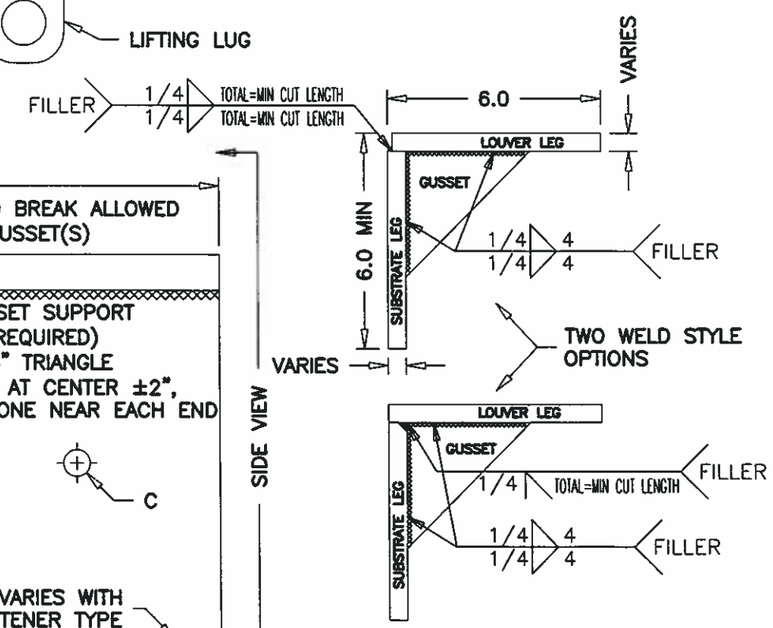

SIDE VIEWS SHOWN AT 1/2 SCALE

FILLER MAT'L.
ALUM=4043 OR 5356
STEEL=E70XX

MULLION MOUNTING BRACKET TABLE, 1 OF 2

LOUVER HEIGHT	SUBSTRATE LEG THK.	LOUVER LEG THK.	GUSSET THK.	MIN CUT LENGTH	MAT'L TYPE	PROCESS TYPE
≤144	≥1/2	≥1/2	NA	16.5	6061-T6	EXTRUDED
≤144	≥7/16	≥7/16	NA	24	A36	ROLLED
≤144	≥1/2	≥1/2	NA	18.5	A36	ROLLED
≤144	≥5/16	≥1/4	≥5/16	20	6061-T6	WELDED
≤144	≥5/16	≥3/16	≥5/16	20	STEEL	WELDED

MULLION MOUNTING BRACKET TABLE, 2 OF 2

LOUVER HEIGHT	SUBSTRATE LEG THK.	LOUVER LEG THK.	GUSSET THK.	MIN CUT LENGTH	MAT'L TYPE	PROCESS TYPE
≤96	≥1/2	≥1/2	NA	6.6	6061-T6	EXTRUDED
≤96	≥3/8	≥3/8	NA	12.34	STEEL	ROLLED
≤96	≥7/16	≥7/16	NA	9	STEEL	ROLLED
≤96	≥5/16	≥1/4	≥5/16	9	6061-T6	WELDED
≤96	≥5/16	≥3/16	≥5/16	9	STEEL	WELDED

DATE 8/25/2010
DRAWN BY MES
SCALE 1:2.2
SHEET NO. 22 OF 22
CAD DRAWING NO. K6746MD

AIROLITE
The look that works.™
SCHOFIELD, WISCONSIN 54476
715-359-6171

TITLE K6746MD LOUVER SLEEVE/CONTINUOUS MOUNT W/ AND W/O VCD-40 PART PROFILES

RICE ENGINEERING
105 School Creek Trail
Luxemburg, WI 54217
Phone: 920.845.1042
Fax: 920.845.1048
www.rice-inc.com

Texas Firm No: F-2183
L. David Rice
Registration No: 81248

STATE OF TEXAS
L. DAVID RICE
81248
REGISTERED PROFESSIONAL ENGINEER

AUG 29 2013